Syphons For Steam And Heat Transfer Media

Conventional "pigtail" syphon with traditional root valve has multiple connections, and a large space envelope.

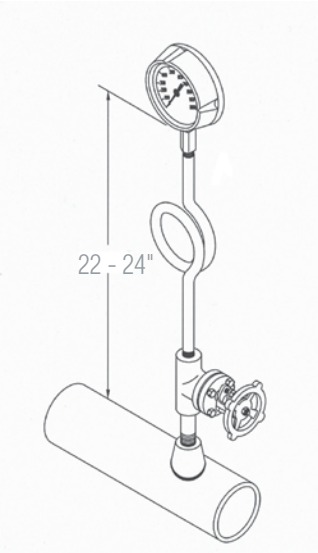

The installation can be simplified using a model HGSY gauge syphon installed in a traditional root valve. An added benefit is the reduced space envelope.

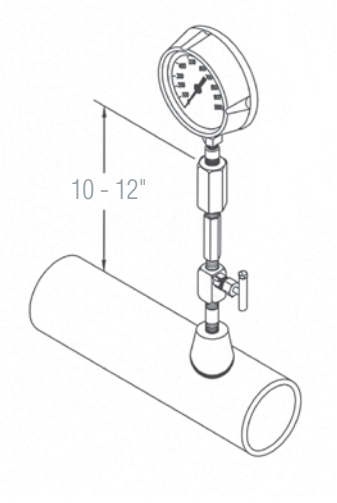

The most streamlined installation results from the use of the Hex HGVS Gauge Valve / Syphon Combination.

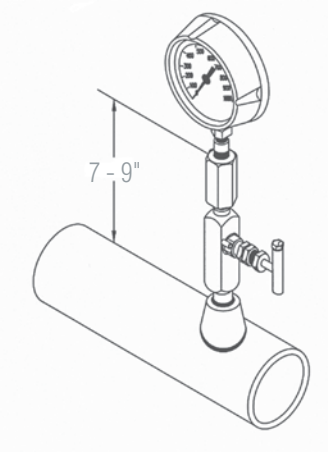

Hex gauge syphons act as thermal and liquid seal barriers between hot process vapors (such as steam and heat transfer fluids) and the gauge pressure instrument. It is designed to replace the large installation space requirements of the traditional "pigtail" syphon, providing maximum instrument protection in half the space. This reduced radius minimizes weight and deflection stress at the primary valve.

Features and Benefits

- **Minimizes Space/Radius Requirements** – Using a model HGSY syphon and a Hex "male x female" globe/needle valve can reduce the conventional installation radius by 50%. Using the model HGVS combination valve and syphon reduces the radius an additional 15%.
- **Minimizes Deflection Stress** – Both models minimize deflection stress at the primary valve connection as a result of reduced weight and radius, decreasing problems associated with system vibration.
- **Thermal Protection** – Whether high process temperature or instrument freeze-up are concerns, both models provide a constant thermal barrier. A liquid barrier is always present between the instrument and syphon to minimize overheating. For freeze protection, simply fill the syphon with a process-compatible liquid fill.
- **Leak Point Minimization** – connection reduces threaded connections from four to two.

Dimensions – HGVS

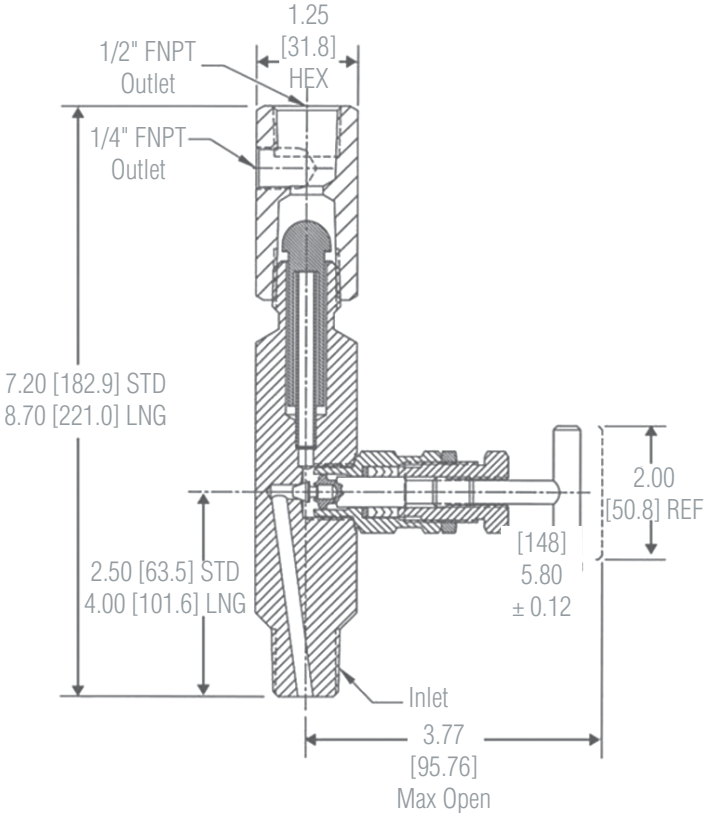

Dimensions – HGSY

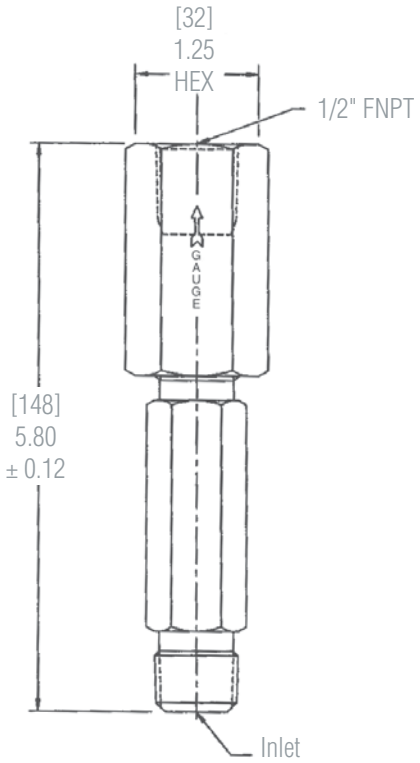

Flow Schematic – HGVS

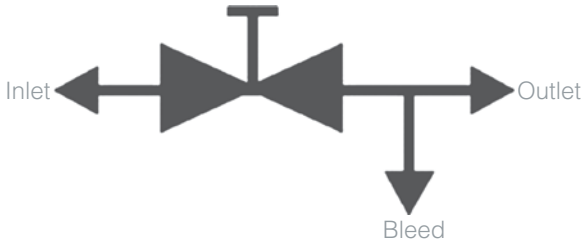

Flow Schematic - HGSY

How to Order

Model Number	Hard Seat / Body	Body Material	Inlet Size	Inlet Type	Outlet Size	Outlet Type	Stem / Tip*	Seat*	Packing*
HGVS	1 = Std Body	S = Carbon Steel	3 = 1/2" FNPT	1 = MNPT	3 = 1/2"	1 = FNPT	4 = 316 SS	1 = Integral	2 = TFE-Chevron
HGSY	3 = Long Body*	U = Stainless Steel	4 = 3/4" FNPT	2 = MSW		A = HB241 in side*			3 = Graphite
						R = Plug (1) in side*			
						E = HN49 in side*			
						V = HB27 in side*			

* HGVS

Sample Ordering Schematic

HGVS	1	S	3	1	3	1	4	1	2