Milltronics MBS

Overview

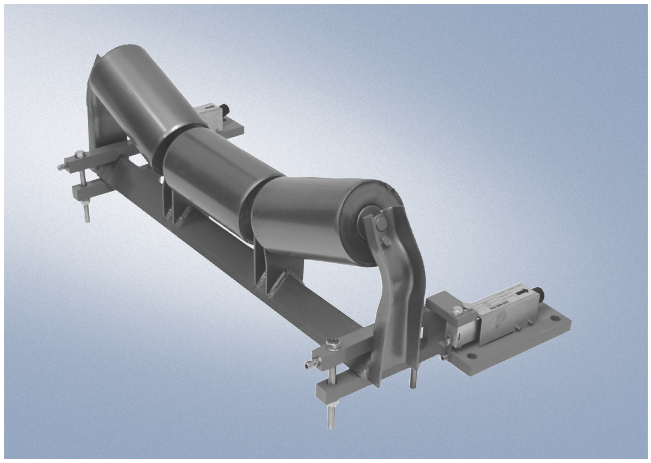

Milltronics MBS is a basic, modular, medium-duty belt scale providing dynamic weighing information for process indication.

Benefits

- Unique modular design
- Simple installation
- Low cost
- Easy retrofit

Application

Milltronics MBS is used with aggregates, sand, or minerals, animal feeds or grains, providing basic continuous in-line weighing at a minimal cost. With no cross bridge, this versatile unit will fit most conveyor widths and standard idlers, and product build-up is reduced.

The construction and easy assembly of the MBS ensure quick delivery to meet even the tightest of schedules. Where scales are moved from conveyor to conveyor, the MBS also provides unmatched flexibility.

Operating with the Milltronics BW100 or BW500 microprocessor-based integrators, the MBS provides indication of flow rate, total weight, belt load, and speed of bulk solids materials on a belt conveyor. A speed sensor monitors conveyor belt speed for input to the integrator.

Technical specifications

Mode of operation	
Measuring principle	Heavy duty strain gauge load cells measuring load on belt conveyor idlers
Typical applications	• Monitor feed rates of fractionated stone, sand, animal feeds, grains • Track daily production totals
Performance	
Accuracy	± 1 % of totalization over 3:1 operating range, application dependent
Medium conditions	
Max. material temperature	70 °C (158 °F)
Belt design	
Belt width	• Standard duty up to 1000 mm (CEMA width up to 42") • Refer to outline dimension section
Belt speed	Up to 3 m/s (600 fpm)
Capacity	Up to 1500 t/h (1650 STPH) at maximum belt speed
Conveyor incline	• ± 20° from horizontal, fixed incline • Up to ± 30° with reduced accuracy
Idlers	
Idler profile	• Flat to 35° • To 45° with reduced accuracy
Idler diameter	50 to 150 mm (2 to 6")
Idler spacing	0.6 to 1.5 m (2.0 to 5.0 ft.)
Load cell	
Construction	Aluminum
Excitation	10 V DC nominal, 15 V DC max.
Output	2 ± 0.02 mV/V excitation at rated load cell capacity
Non-repeatability	0.01 % of rated output
Non-linearity	0.02 % of rated output
Hysteresis	0.02 % of rated output
Capacity	30, 50, 100 kg (66, 110, 220 lbs)
Overload	150 % of rated capacity, ultimate 200 % of rated capacity
Temperature	• -30 to 70 °C (-22 to 158 °F) operating range • -10 to 40 °C (15 to 105 °F) compensated
Weight	• 12 kg (26 lbs), 6 kg (13 lbs) per side
Interconnection wiring (to integrator)	• <150 m (500 ft) 18 AWG (0.75 mm^2) 6 conductor shielded cable • >150 m (500 ft.) to 300 m (1000 ft.) 18 to 22 AWG (0.75 to 0.34 mm^2) 8 conductor shielded cable
Hazardous locations	With use of intrinsically safe barrier strips
Approvals	CE

Dimensional drawings

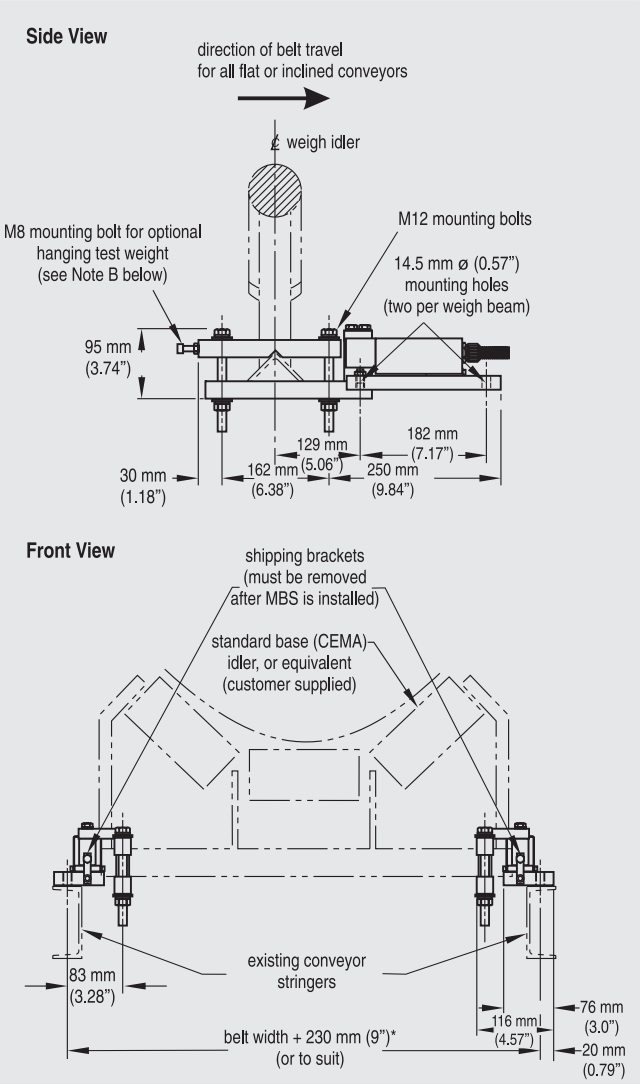

Notes:

A) 2 approach and 2 retreat idlers should be aligned with the weigh idler to within +1/32" (0.8 mm) to -0" (0 mm). Call your Siemens Milltronics representative for more information.

B) Optional J-type test weights can be applied with optional test bracket. Alternatively, test weights (customer supplied), may be hung on the M8 bolts. If this method is chosen, equal mass should be applied to each weigh beam, and the test weights should hang free of the fixed structure.

MBS dimensions

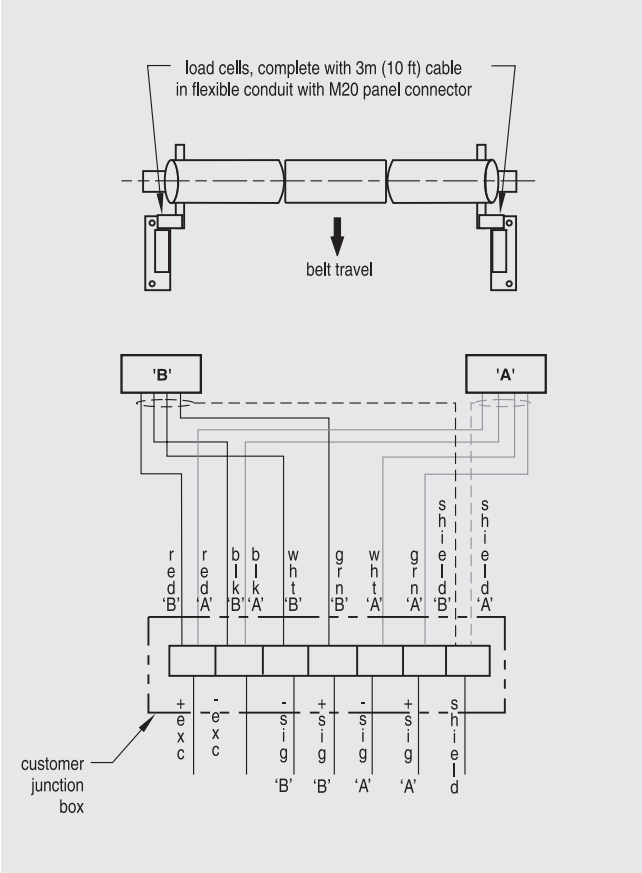

MBS connections

5

Selection and Ordering data

		Order No.
Milltronics MBS Belt Scale A basic, modular, medium-duty belt scale providing dynamic weighing information for process indication.	A)	**7MH7121-1 ■ 10**
Scale Construction		
Standard [up to 1000 mm (42") belt width]		**1**
Load Cell Capacity		
Aluminum Load Cell		
30 kg		**AB**
50 kg		**AC**
100 kg		**AE**
not specified		**XX**
Fabrication		
Mild steel with polyester paint		**1**
Optional Equipment		
Calibration test arm assembly, c/w one 8.2 kg (18 lb) calibration weight		**7MH7723-1FR**
Calibration test arm assembly, c/w two 8.2 kg (18 lb) calibration weights		**7MH7723-1FS**
MBS calibration arm c/w idler clip (holds up to two 8.2 kg (18 lb) weights		**7MH7726-1AD**
Calibration weight, 8.2 kg (18 lb)		**7MH7724-1AA**
Note: The calibration arm and weights should be ordered as separate lines on the order.		
Instruction Manual		
English	A)	**7ML1998-5JN01**
Belt Scale Application Guidelines		
• English	A)	**7ML1998-5GA01**
• French	A)	**7ML1998-5GA11**
• German	A)	**7ML1998-5GA31**
• Spanish	A)	**7ML1998-5GA21**
Note: The instruction manual and application guidelines manual should be ordered as separate lines on the order.		
Spare Parts		
Load cell, 30 kg, aluminum		**7MH7725-1BK**
Load cell, 50 kg, aluminum		**7MH7725-1BL**
Load cell, 100 kg, aluminum		**7MH7725-1BM**

A) Subject to export regulations AL: N, ECCN: EAR99