Installation Manual

Hygienic Weighing Module Novego®

Translation of the Original Installation Manual 9499 053 26100 Edition 1.13.0 07/09/2021

Minebea Intec GmbH, Meiendorfer Str. 205 A, 22145 Hamburg, Germany
Phone: +49.40.67960.303 Fax: +49.40.67960.383

Foreword

Must be followed!

Any information in this document is subject to change without notice and does not represent a commitment on the part of Minebea Intec unless legally prescribed. This product should only be operated/installed by trained and qualified personnel. In correspondence concerning this product, the type, name, and release number/serial number as well as all license numbers relating to the product have to be cited.

Note

This document is partially protected by copyright. It may not be changed or copied, and it may not be used without purchasing or written permission from the copyright owner (Minebea Intec). The use of this product constitutes acceptance by you of the abovementioned provisions.

Table of contents

1 Introduction ... 4
1.1 Read the manual ... 4
1.2 This is what operating instructions look like ... 4
1.3 This is what lists look like ... 4
1.4 This is what menu items and softkeys look like ... 4
1.5 This is what the safety instructions look like ... 4
1.6 Hotline ... 5

2 Safety instructions ... 6
2.1 General notes ... 6
2.2 Intended use ... 6
2.3 Initial inspection ... 6
2.4 Before operational startup ... 6

3 Recommendations for installation ... 7
3.1 Location of weighing modules ... 7

4 Specifications ... 8
4.1 Equipment supplied with the weighing module ... 8
4.2 General information ... 9
4.3 Possible marking of the load cell for the Ex area ... 9
4.4 Dimensions of weighing module with pendulum base PR 6061/02S ... 11
4.5 Dimensions of weighing module with pendulum base PR 6061/03S ... 12
4.6 Dimensions of weighing module with pendulum base PR 6061/04S ... 13
4.7 Dimensions of adapter plate with height adjustment PR 6061/01S ... 14
4.8 Ordering information ... 15
4.8.1 Ordering information of the load cell ... 15
4.8.2 Ordering information for options ... 15
4.8.3 Ordering information for accessories ... 15
4.9 Technical data of the load cell ... 15
4.10 Technical data for transport lock and PR 6061/06S ... 17

5 Installation ... 18
5.1 Prior to mounting ... 18
5.1.1 Preparing the substructure ... 18
5.1.2 Preparing the ground ... 19
5.1.3 Preparing vessel foot ... 22
5.2 Tightening torques ... 23
5.3 Assembly ... 23
5.3.1 Safety instructions ... 23
5.3.2 Mounting the weighing module ... 25

6 Connection ... 37
6.1 General information ... 37
6.2 Load cell ... 38
6.3 Cable connections ... 38

7 Preparing for calibration ... 40
7.1 General notes ... 40
7.2 Smart Calibration ... 40
7.3 Mechanical height adaptation ... 40

8 Troubleshooting ... 41
8.1 General Notes ... 41
8.2 Visual inspection ... 41
8.3 Metrological controls ... 41
8.3.1 Checking the zero output signal of the load cell ... 41
8.3.2 Checking the strain gauge bridge of the load cell ... 41
8.3.3 Checking the insulation impedance of the load cell ... 42
8.3.4 Checking the insulation impedance of the connecting cable ... 42

9 Servicing/repairs/cleaning ... 43
9.1 Care and maintenance ... 43
9.1.1 Maintenance ... 43
9.1.2 Replacing the load cell ... 43
9.2 Repairs ... 47
9.3 Cleaning ... 47

10 Disposal ... 48

11 Options ... 49
11.1 PR 6061/02S pendulum base for frame mounting for Novego® ... 49
11.2 PR 6061/03S pendulum base for ground installation for Novego® ... 50
11.3 PR 6061/04S pendulum base for ground installation with tilt correction for Novego® ... 51

12 Replacement parts ... 52

13 Accessories ... 53
13.1 Connecting cables ... 53
13.2 Cable junction boxes ... 53
13.3 Connexx module ... 54
13.3.1 Specifications ... 54
13.3.2 Connection of Connexx modules ... 55
13.3.3 Mounting options ... 56
13.3.4 Connecting parts for the Connexx module ... 62
13.4 PR 6061/00S Adapter plate for Novego® ... 63
13.5 PR 6061/01S adapter plate with height adjustment for Novego® ... 64
13.6 PR 6061/05S Set of metal sheets for Novego® ... 65

13.7 PR 6061/06S Transportation and installation kit for Novego® 66
13.8 PR 6061/07S Pivot for Novego® 67

14 Certificates/safety instructions/control drawing 68
14.1 BVS 16 ATEX E 005 69
14.2 IECEx BVS 16.0005 73
14.3 TÜV 03 ATEX 2301X 77
14.4 IECEx TUN 17.0025X 83
14.5 MIN16ATEX001X 87
14.6 FM17CA0138 89
14.7 FM17US0276 92
14.8 4012 101 5688 95
14.9 MEU18004 96
14.10 RU Д-DE.A301.B.05345 102
14.11 RU C-DE.MЮ62.B.05836 103
14.12 DE.C.28.001.A No. 70234 106
14.13 DE-15-PC-PTB009 112
14.14 R60/2000-NL1-17.41 118
14.15 TC11066 120
14.16 17-094 123
14.17 10032 125

1 Introduction

1.1 Read the manual

- Please read this manual carefully and completely before using the product.
- This manual is part of the product. Keep it in a safe and easily accessible location.

1.2 This is what operating instructions look like

1. - n. are placed before steps that must be done in sequence.

▶ is placed before a step.

▷ describes the result of a step.

1.3 This is what lists look like

- indicates an item in a list.

1.4 This is what menu items and softkeys look like

[ ] frame menu items and softkeys.

Example:

[Start]- [Applications]- [Excel]

1.5 This is what the safety instructions look like

Signal words indicate the severity of the danger involved when measures for preventing hazards are not followed.

⚠ **DANGER**

Warning of personal injury

DANGER indicates death or severe, irreversible personal injury which will occur if the corresponding safety measures are not observed.

▶ Take the corresponding safety precautions.

⚠ **WARNING**

Warning of hazardous area and/or personal injury

WARNING indicates that death or severe, irreversible injury may occur if appropriate safety measures are not observed.

▶ Take the corresponding safety precautions.

⚠ **CAUTION**

Warning of personal injury.

CAUTION indicates that minor, reversible injury may occur if appropriate safety measures are not observed.

▶ Take the corresponding safety precautions.

NOTICE

Warning of damage to property and/or the environment.

NOTICE indicates that damage to property and/or the environment may occur if appropriate safety measures are not observed.

▶ Take the corresponding safety precautions.

Note:

User tips, useful information, and notes.

1.6 Hotline

Phone: +49.40.67960.444

Fax: +49.40.67960.474

eMail: help@minebea-intec.com

2 Safety instructions

2.1 General notes

NOTICE

Warning of damage to property and/or the environment.

The product was in perfect condition with regard to safety features when it left the factory.

▶ To maintain this condition and to ensure safe operation, the user must follow the instructions and observe the warnings in this manual.

2.2 Intended use

The Hygienic Weighing Module Novego®, consisting of load cell PR 6261/.. and pendulum base PR 6061/.., has been designed especially for weighing tasks using small and medium-sized process vessels.

The weighing module Novego® may be used only for weighing tasks as intended.

The dimensions of all mounting and structural components must be calculated so that sufficient overload capacity is ensured for all loads which may occur while taking the relevant standards into account. In particular, upright weighing objects (vessels or similar) must be safeguarded against the weighing installation turning over or being shifted, thus eliminating danger to people, animals, or goods even in the case of breakage of a weighing module.

In intrinsically safe circuits, only load cells PR 6261/..E may be used.

Installation and repair work must only be carried out by expert/qualified personnel.

The weighing module reflects the state of the art. The manufacturer does not accept any liability for damage caused by third-party system components or due to incorrect use of the product.

2.3 Initial inspection

Check the contents of the consignment for completeness. Check the contents visually to determine whether any damage has occurred during transport. If there are grounds for rejection of the goods, a claim must be filed with the carrier immediately. The Minebea Intec sales or service organization must also be notified.

2.4 Before operational startup

NOTICE

Perform visual inspection.

▶ Before operational startup as well as after storage or transport, inspect the weighing module (load cell with pendulum base) visually for signs of mechanical damage.

3 Recommendations for installation

3.1 Location of weighing modules

- The underframe of the vessels must be strong enough to support the specified loads, horizontal (water level!) and flat.

Note:

A pendulum base with tilt correction compensates for any inclination of ≤3°.

- Preferably, vessels should be installed on 3 weighing modules.
- The weighing modules should be arranged evenly over the entire vessel.
- Parasitic and/or horizontal forces and torques exceeding the permissible limits are disturbances which can generate measuring failures and, in the worst case, may damage the load cell.
- The pendulum bases absorb the occurring transverse forces within the limit values.
- No constrainer is necessary because of the 360° stopper integrated in the pendulum base.
- If 3 weighing modules are used, the weighing system can absorb 3 times the maximum capacity of transversal force.

4 Specifications

4.1 Equipment supplied with the weighing module

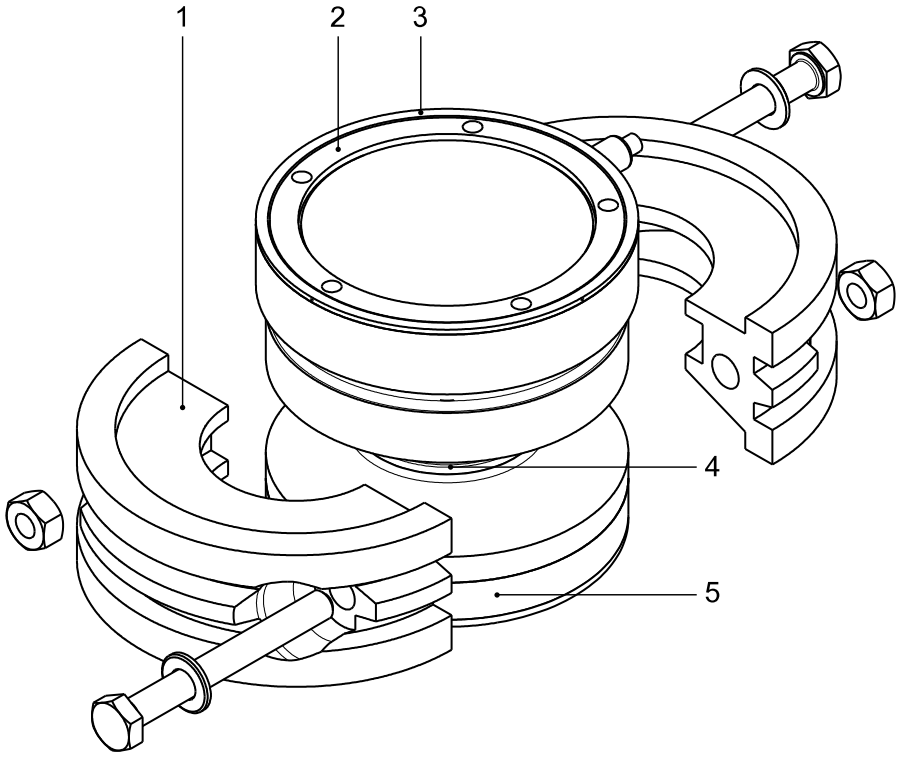

No.	Identifier
1	Transport lock (including screws, washers, and nuts)
2	Load cell PR 6261/..
3	Gasket
4	Pendulum pin with O-ring
5	Option: Pendulum base (depicted here: Pendulum base for frame mounting, see Chapter 11.1.) Other pendulum bases can be selected, see Chapter 11.
The following items are not shown:	
6	Drilling template for mounting without adapter plate (in the load cell packaging)
7	Drilling template for frame/ground installation (in the pendulum base packaging)
8	Quick guide
9	Calibration Certificate
10	Only with Ex-load cells: Safety information for Ex-load cells

4.2 General information

Restoring force	Displacement of the load cell onto the pendulum base generates a restoring force that increases with the force applied to the load cell. If the load cell is displaced by 2.5 mm, the pendulum base reaches its stopper.
Load cell material	Stainless steel 1.4418 acc. to DIN EN 10088-3
Material of pendulum base	Stainless steel 1.4301 acc. to DIN EN 10088-3 (corresponds to AISI 304, B.S. 304S15) and 1.4418 acc. to DIN EN 10088-3
Protection classes	in compliance with IEC 529 or DIN EN 60529 **IP66/IP68/IP69:** Dust-proof and leak-tight against water, with harmful effects when immersed, (1.5 m water depth, 10,000 h) and water jets (high pressure and temperature). **Explosion:** Suitable for explosion subgroup IIC and IIIC.
Protection type	Intrinsic safety for PR 6261/..E
Ambient temperature in the Ex area	see additional information “safety instructions for Ex load cells” only with approval RU C-DE.МЮ62.B.05836: -52...+55 °C
Cable diameter	5 mm
Cable length	5 m
Cable gauge	4×0.35 mm^2
Cable bend radius	≥25 mm (fixed installation) ≥75 mm (flexible installation)
Cable sheath material	Thermoplastic elastomer (TPE)
Cable sheath color	Gray (standard version) Blue (Ex version)

4.3 Possible marking of the load cell for the Ex area

Zone	Marking	Certificate no.	for
0 and 1	II 1G Ex ia IIC T6 Ga Ex ia IIC T6 Ga 0Ex ia IIC T6	BVS 16 ATEX E 005 IECEx BVS 16.0005 RU C-DE.МЮ62.B.05836*	only PR 6261/..E
20 and 21	II 1D Ex ta IIIC T160 °C Da Ex ta IIIC T160 °C Da Ex ta IIIC T160 °C X	TÜV 03 ATEX 2301X IECEx TUN 17.0025X RU C-DE.МЮ62.B.05836*	all PR 6261 without /..E
2	II 3G Ex nA IIC T6 Gc 2Ex nA IIC T6 X	MIN16ATEX001X RU C-DE.МЮ62.B.05836*	all PR 6261 without /..E
22	II 3D Ex tc IIIC T85 °C Dc Ex tc IIIC T85 °C X	MIN16ATEX001X RU C-DE.МЮ62.B.05836*	all PR 6261 without /..E
		* Certification body: Prommash Test LLC (Accrediting code МЮ62)	

Zone	Marking	Certificate no.	for
	IS CL I, II, III, DIV 1, GP A, B, C, D, E, F, G Entity - 4012 101 5688 NI CL I, II, III, DIV 2, GP A, B, C, D, E, F, G - 4012 101 5688; NIFW T4A Ta= -40°C to 70°C; T5 Ta= -40°C to 55°C	FM17US0276	all PR 6261 without /..E
	IS CL I, II, III, DIV 1, GP A, B, C, D, E, F, G Entity - 4012 101 5688 NI CL I, II, III, DIV 2, GP A, B, C, D, E, F, G - 4012 101 5688; NIFW T4A Ta= -40°C to 70°C; T5 Ta= -40°C to 55°C	FM17CA0138	all PR 6261 without /..E

NOTICE

Installation in the Ex area

▶ For installations in the Ex area, it is imperative to observe the Ex safety instructions in the installation manuals.

4.4 Dimensions of weighing module with pendulum base PR 6061/02S

Without adapter plate (PR 6061/00S) **With adapter plate (PR 6061/00S)**

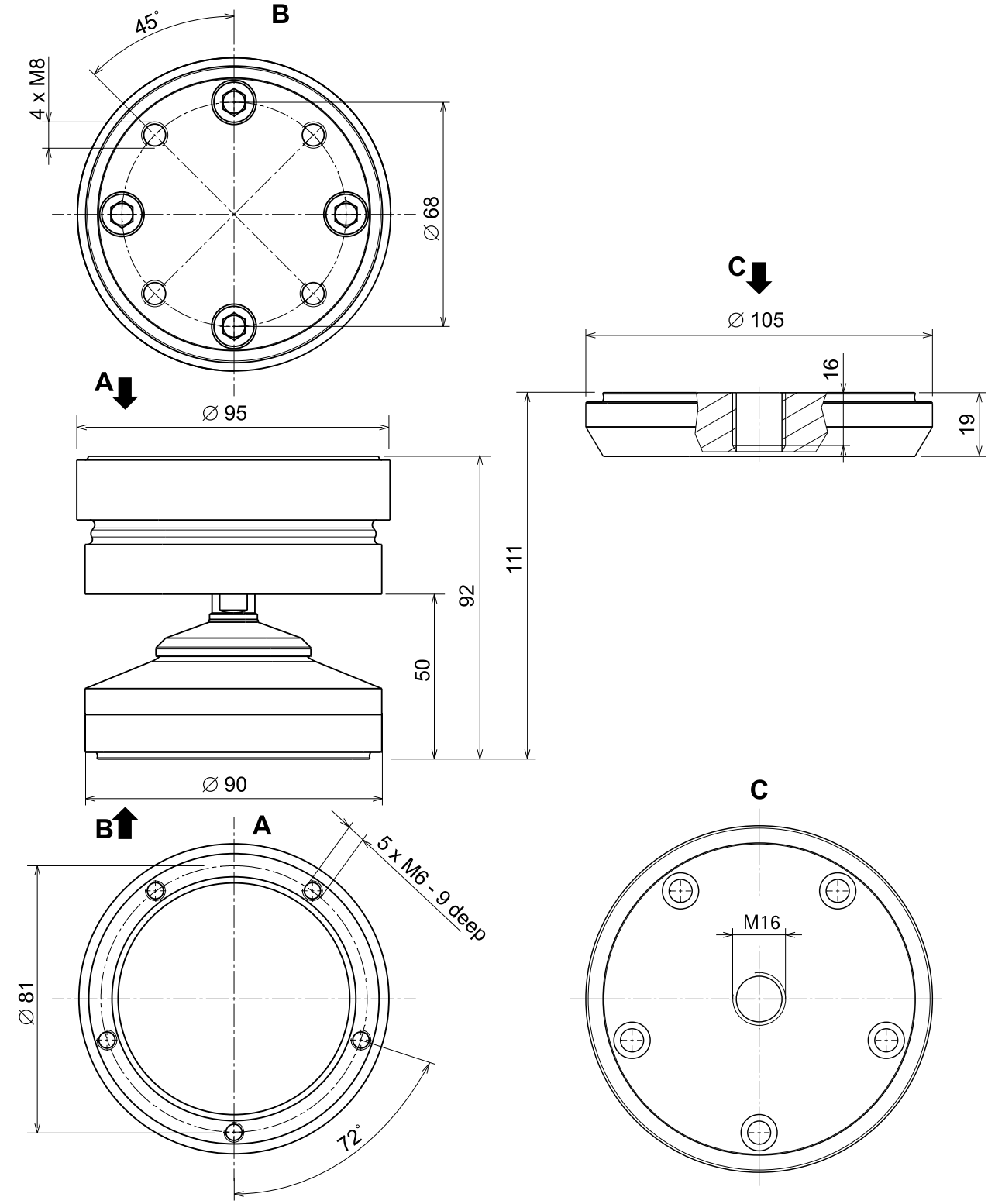

All dimensions in mm

4.5 Dimensions of weighing module with pendulum base PR 6061/03S

Without adapter plate (PR 6061/00S)	With adapter plate (PR 6061/00S)

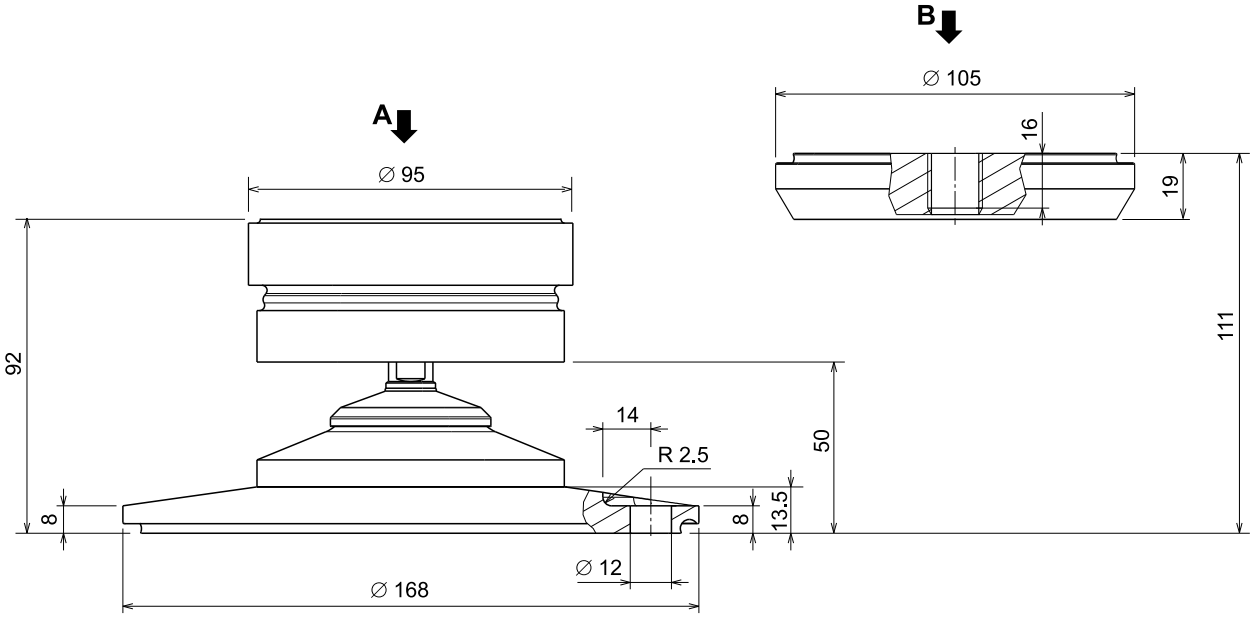

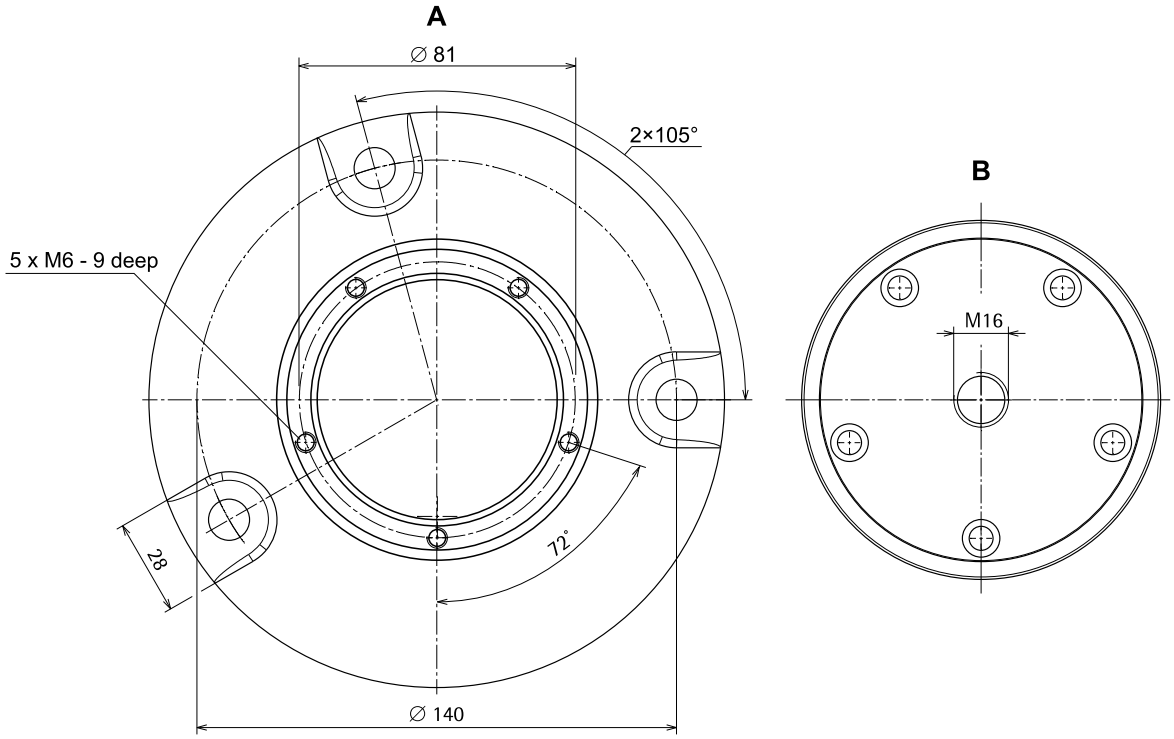

All dimensions in mm

4.6 Dimensions of weighing module with pendulum base PR 6061/04S

Without adapter plate (PR 6061/00S) **With adapter plate (PR 6061/00S)**

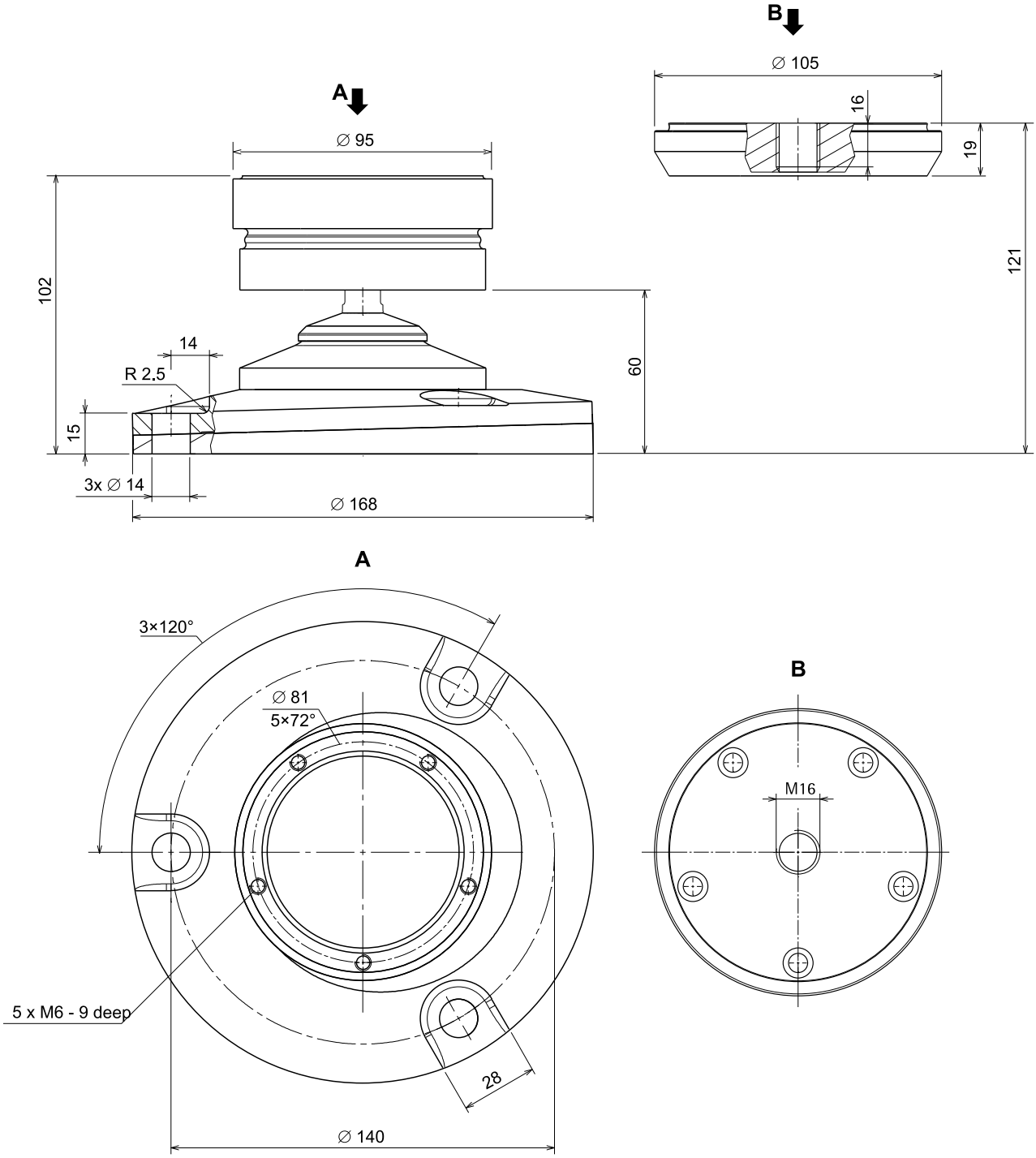

All dimensions in mm

4.7 Dimensions of adapter plate with height adjustment PR 6061/01S

Note:

For more information, see Chapters 5.3.2.3 and 13.5.

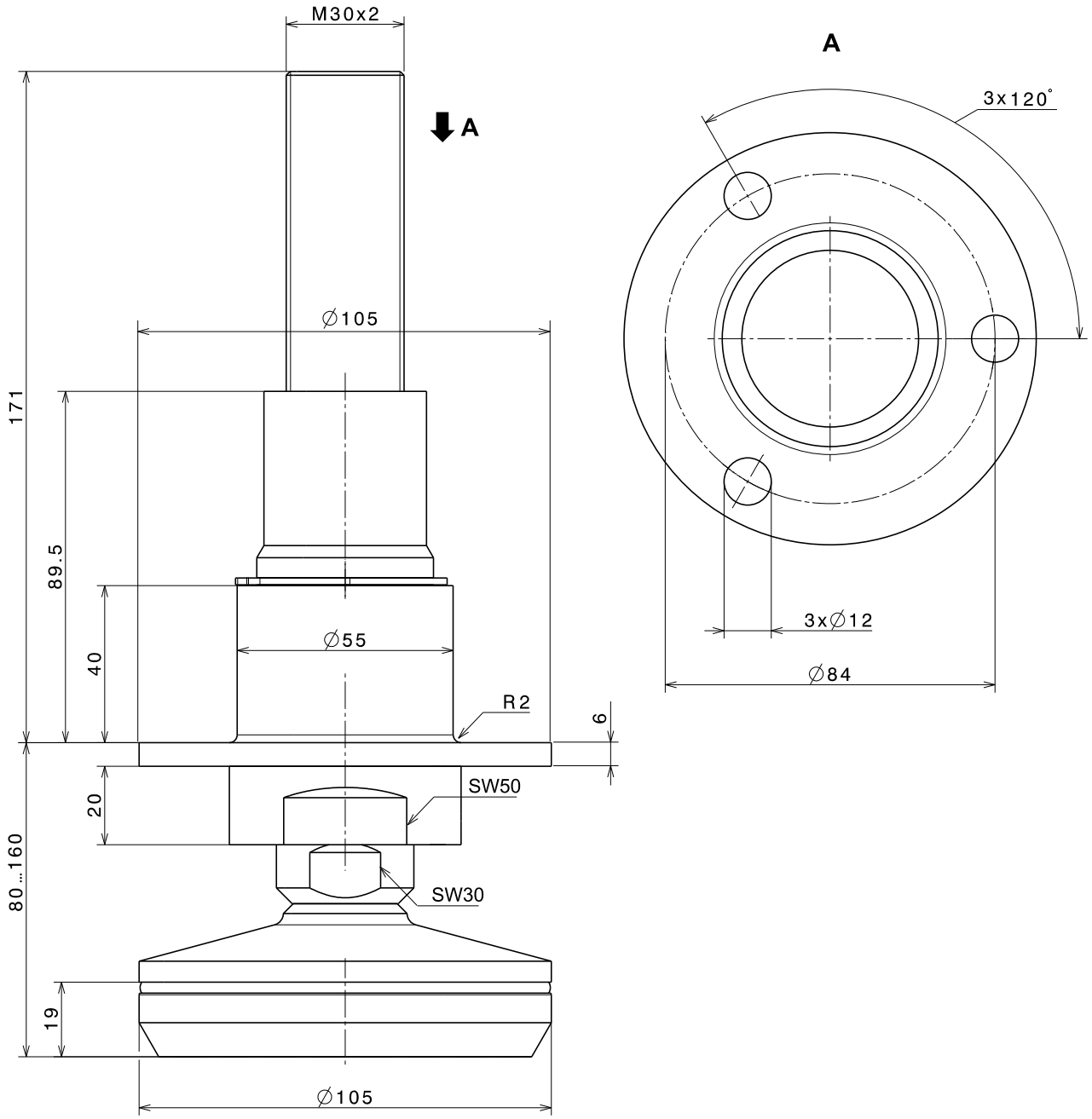

all dimensions in mm

4.8 Ordering information

4.8.1 Ordering information of the load cell

Model	Max. capacity E_{max}	Type
PR 6261/125 kg	125 kg	..D1/D1E
PR 6261/250 kg	250 kg	..C3/C3E
PR 6261/500 kg	500 kg	..C3/C3E
PR 6261/1 t	1 t	..C3/C3E
PR 6261/2 t	2 t	..C3/C3E

4.8.2 Ordering information for options

Option	see Chapter
PR 6061/02S	11.1
PR 6061/03S	11.2
PR 6061/04S	11.3

4.8.3 Ordering information for accessories

Option	see Chapter
PR 6061/00S	13.4
PR 6061/01S	13.5
PR 6061/05S	13.6
PR 6061/06S	13.7
PR 6061/07S	13.8

4.9 Technical data of the load cell

Designation	Description	Abbr.	D1/D1E	C3/C3E	Unit
Accuracy class			0.04	0.015	% E_{max}
Maximum capacity	highest limit of specified measuring range	E_{max}	see Chapter 4.8.1		
Minimum dead load	lowest limit of specified measuring range	E_{min}	0	0	% E_{max}
Safe load limit	Highest load without irreversible damage	E_{lim}	150		% E_{max}
Destructive load	danger of mechanical destruction	E_d	>300		% E_{max}
Max. permissible lifting force	to still hold the specified performance afterwards		100		% E_{max}
Destructive lifting force	Danger of mechanical destruction (by lifting)		>300 but max. 3 t		% E_{max}

Designation	Description	Abbr.	D1/D1E	C3/C3E	Unit
(Nominal) side force range	Range of side force to hold the specified performance	QK_n	≤20		% Load
Side force limit	Maximum side force without irreversible damage	E_{lq}	100 but max. 1 t		% E_{max}
Minimum LC verification	minimum load cell verfication interval, $v_{min} = E_{max}/Y$	Y	5000	14000	
Deadload output return	Factor for dead load output return after load (DR = ½ * E_{max}/Z)	Z	1000	3000	
Rated output	relative output signal at maximum capacity	C_n	2	2	mV/V
Tolerance on rated output	permissible deviation from rated output C_n	d_c	<0.25	<0.07	% C_n
Zero output signal	load cell output signal under unloaded condition	S_{min}	0 to 2	0 to 1.5	% C_n
Repeatability error	max. change in load cell output for repeated loading	ε_R	<0.01	<0.005	% C_n
Creep	max. change of output signal at E_{max} during 30 minutes	d_{cr}	<0.03	<0.016	% C_n
Linearity deviation[1)]	Deviation from the best straight lines through zero	d_{Lin}	<0.035	<0.01	% C_n
Hysteresis[1)]	max. difference in LC output between loading and unloading	d_{hy}	<0.035	<0.016	% C_n
Temperature effect of the S_{min}	max. change of S_{min} in B_T	TK_{Smin}	<0.028	<0.01	% C_n/10 K
Temperature effect on C[1)]	max. change of C in B_T	TK_C	<0.03	<0.01	% C_n/10 K
Input impedance	between supply terminals	R_{LC}	1080 ±10		Ω
Output impedance	between measuring terminals	R_O	1010 ±2	1010 ±1	Ω
Insulation impedance	between measuring circuit and housing, U_{DC} = 100 V	R_{IS}	>5000		MΩ
Insulation voltage	between circuit and housing (PR 6261/..E only)		500		V
Recommended supply voltage	to hold the specified performance	B_u	4 to 20		V
Max. supply voltage	permissible for continuous operation without damage	U_{max}	24		V
Nominal ambient temp. range	to hold the specified performance	B_T	-10 to +40		°C
Usable ambient temp. range	permissible for continuous operation without damage	B_{Tu}	-40 to +95		°C

Designation	Description	Abbr.	D1/D1E	C3/C3E	Unit
Storage temperature range	without electrical and mechanical stress	B_{Ti}	-40 to +95		°C
Permissible eccentricity	permissible displacement from nominal load line	S_{ex}	2.5		mm
Vibration resistance	Resistance against oscillations (IEC 60068-2-6 Fc)		20 g, 100 h, 10 to 150 Hz		
Barometric pressure influence	influence of barometric pressure on output				
	for E_{max} 125 kg:	PK_{Smin}	<9	...	g/kPa
	for E_{max} ≥250 kg:	PK_{Smin}	...	<17	g/kPa
Nominal deflection	max. elastic deformation under nominal load				
	for E_{max} ≤500 kg:	S_{nom}	max. 0.1	max. 0.1	mm
	for E_{max} ≥1 t:	S_{nom}	...	max. 0.2	mm

1) The data for non-linearity (d_{Lin}), hysteresis (d_{hy}) and and temperature effect on C (TK_C) are typical values.
For OIML R60 or NTEP approved load cells the sum of these values is within the permissible cumulative error limits.

Definitions acc. to OIML R60

The technical data given are intended solely as a product description and should not be interpreted as guaranteed properties in the legal sense.

NTEP: min. scale interval of the load cells v_{min}

	Type	Divisions n_{max}	125 kg	250 kg	500 kg	1 t	2 t	Unit
Class III Multiple	D1/D1E	2000	25	...	...	...	...	g
	C3/C3E	5000	8.9	17.8	35.7	71.4	142	g
Class III L Multiple	D1/D1E	6000	8.9	...	...	...	...	g
	C3/C3E	10000	7.8	7.8	11.9	23.8	47.6	g

4.10 Technical data for transport lock and PR 6061/06S

	@ max. capacity of load cell	Transport lock	PR 6061/06S
Max. vertical load	125 kg...500 kg	750 kg	750 kg
	1 t, 2 t	3 t	3 t
Max. horizontal load		1 t	1 t
Material		PA6GF30	PA6GF30

5 Installation

5.1 Prior to mounting

5.1.1 Preparing the substructure

The substructure must be designed as follows for the pendulum base:

- horizontal (spirit level!) supporting/sealing surface

Note:

A pendulum base with tilt correction compensates for any inclination of ≤3°.

- flat supporting/sealing surface
- sufficient load carrying capacity for the provided loads

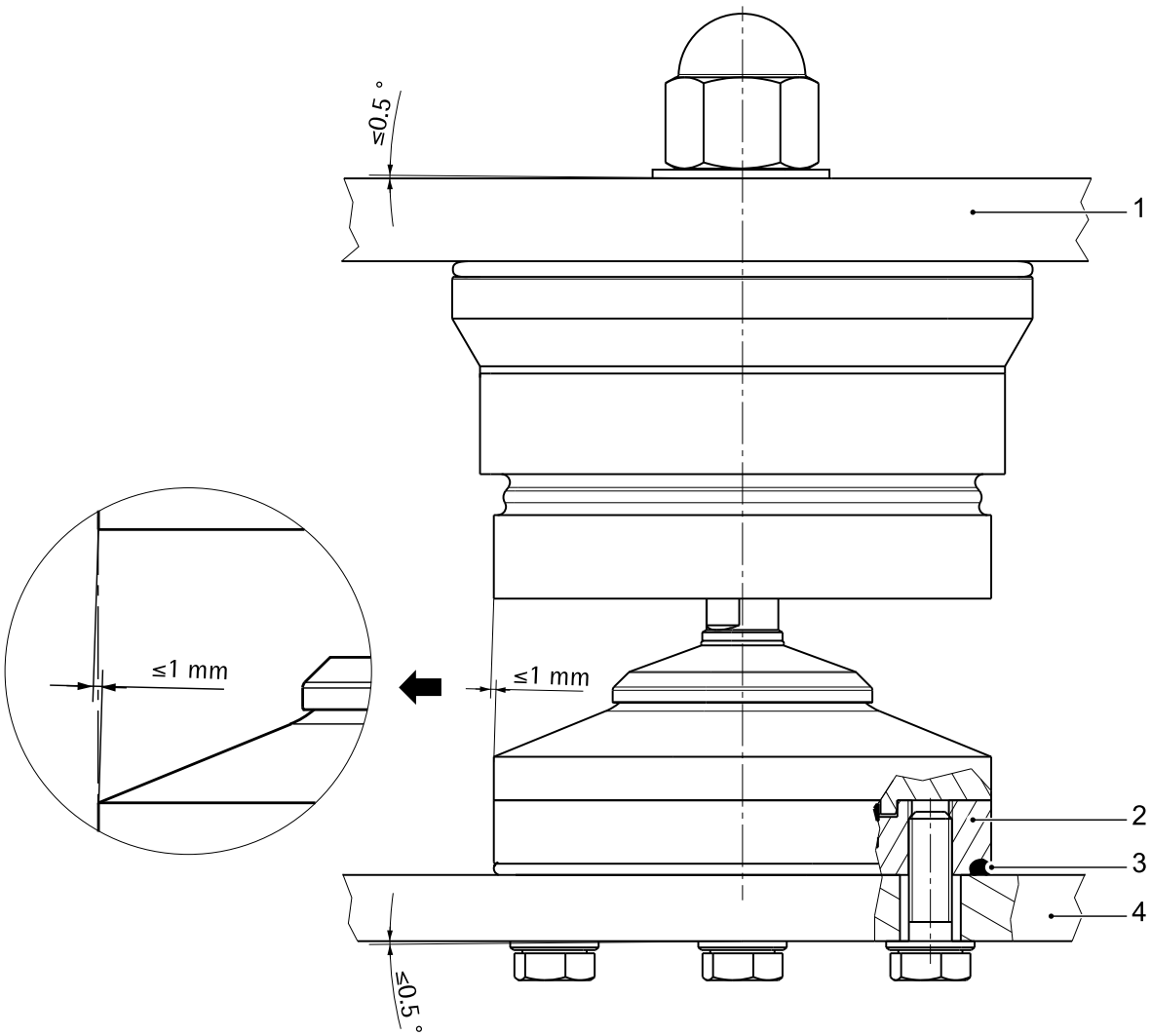

NOTICE

No leak-tightness of the supporting/sealing surface present between pendulum base and substructure.

- Leak-tightness between the pendulum base (2) and substructure (4) must be ensured using O-ring (3).

- The load distribution on the available load cells must be as even as possible to prevent overload of the individual load cells.
- Use the drilling template to generate the drilling pattern of the pendulum bases (see Chapter 4.4) according to the weighing system arrangement.
- The contact surfaces of the pendulum bases (2) and the contact surfaces of the vessel feet (1) must be arranged in parallel.
- It is imperative to observe the maximum permissible inclination (≤1 mm); refer to figure.

5.1.2 Preparing the ground

The ground must be designed as follows for the pendulum base:

- horizontal (spirit level!) supporting/sealing surface

Note:

A pendulum base with tilt correction compensates for any inclination of ≤3°.

- flat supporting/sealing surface
- sufficient load carrying capacity for the provided loads

- The load distribution on the available load cells must be as even as possible to prevent overload of the individual load cells.
- It is imperative to observe the maximum permissible inclination; refer to figure!

5.1.2.1 For pendulum base without tilt correction

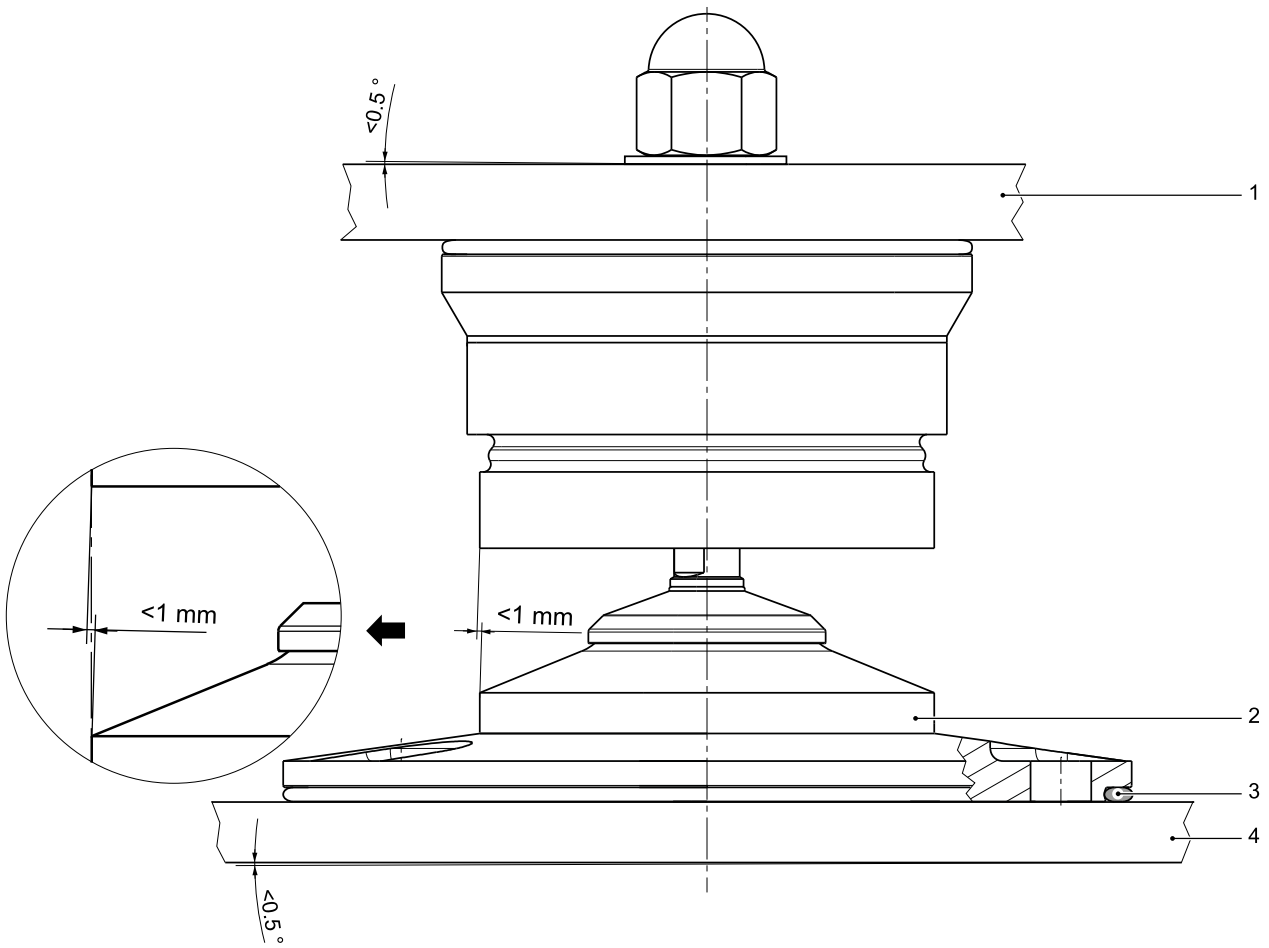

NOTICE

No leak-tightness of the supporting/sealing surface present between pendulum base and bottom.

- Leak-tightness between the pendulum base (2) and bottom (4) must be ensured using O-ring (3).

- The load distribution on the available load cells must be as even as possible to prevent overload of the individual load cells.
- Use the drilling template to generate the drilling pattern of the pendulum bases (see Chapter 4.5) according to the weighing system arrangement.
- For this purpose, place the template on the ground in order to the set the drill holes for the threaded anchor and mount it.
- The contact surfaces of the pendulum bases (2) and the contact surfaces of the vessel feet (1) must be arranged in parallel.

  The maximum permissible misalignment and the maximum allowable misalignment must be strictly observed, see Figure!

5.1.2.2 For pendulum base with tilt correction

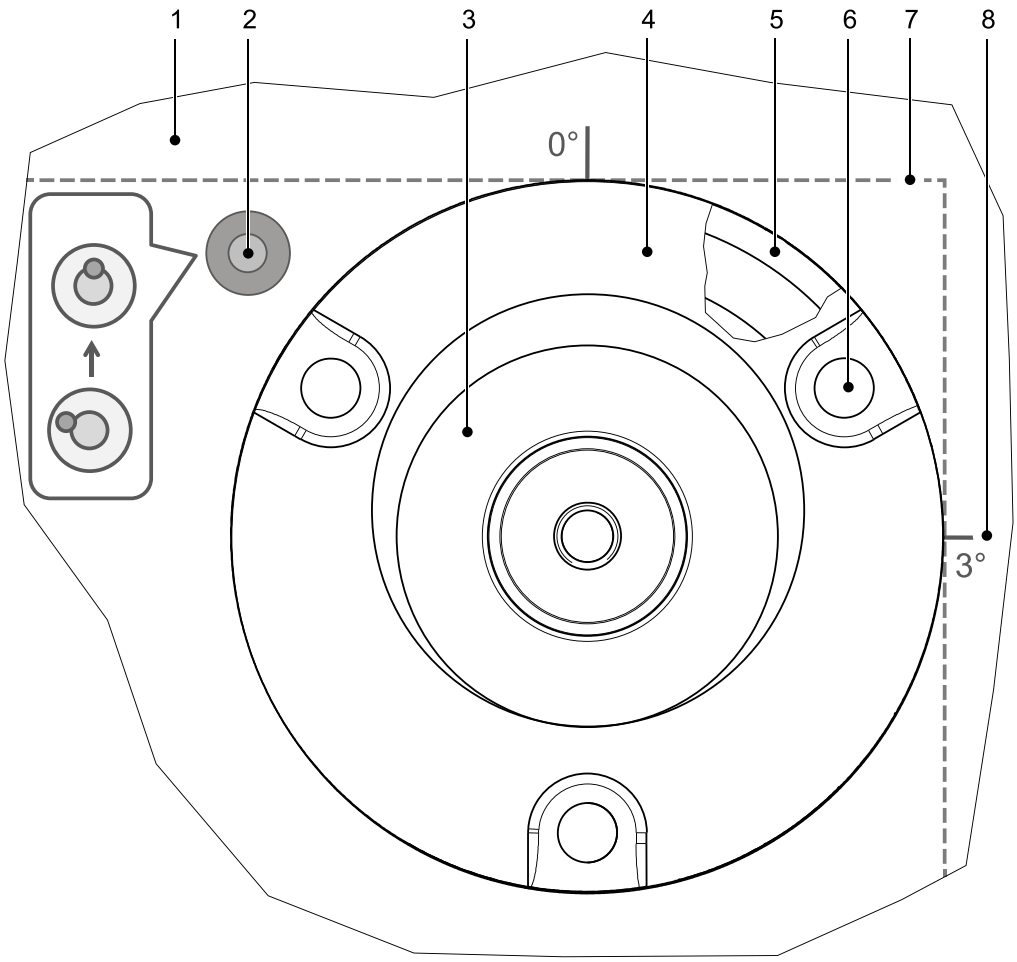

Legend

No.	Identifier
1	Mounting and drilling template
2	Area for spirit level
3	Pendulum base, incl. No. 4 + 5
4	upper ground plate
5	lower ground plate
6	Drill holes
7	Fold lines
8	Guide lines

Note:

Please read the instructions thoroughly!

⚠ CAUTION

The pendulum base with tilt correction weighs approx. 4.2 kg.

Beware of any of a situation with light, reversible injuries as a result.

▶ Always work with appropriate protective equipment.

1. Position template (1) on the ground.
2. Remove the protective film of the two adhesive strips from the template.
3. Hold the lower plate (5) over the template (1) so that position 0° on the 0°-marking of the template and position 3° on the 3°-marking of the template show up.
4. Place the lower plate without pendulum base onto the template and press.
   ▷ The lower plate (5) is now fixed on the template.
5. Place the spirit level next to the marked field (2) of the template (1).
6. Turn the template until the level reaches the marked target orientation.
7. Place the pendulum base (3) using the pin (in the upper plate) onto the lower plate so that the 0°-marking of the upper plate (4) shows up on the 0°-marking of the lower plate.
8. Position the spirit level on the center on any hole of the pendulum base.
9. Rotate the template counterclockwise, in small steps, and the upper plate (4) of the pendulum base to the same extent in the clockwise direction until the bubble is centered.
10. Position the drill holes (6) with a center mark onto the template.
11. Mark the upper plate in position 0° of the lower plate with a felt-tip pen.
12. Fold the template at the fold lines (7).
13. Mark the positions 0° and 3° of the lower plate using the guide lines (8) on the back of the template with a felt-tip pen on the ground.
14. Remove template with pendulum base (3) from the ground.
15. Put holes for the screw anchors.
16. Then insert the threaded rods.

5.1.3 Preparing vessel foot

NOTICE

No leak-tightness of the supporting/sealing surface present between load cell and weighing object.

▶ It is essential to use adapter plate PR 6061/00S to prevent any negative effect on the measuring properties.

If you do not use the adapter plate (see Chapter 13.4), the surface supporting the load cell must fulfill the following requirements:

- Material: stainless steel
- Flatness: 0.05 mm
- The surface must not bend under the expected load (i.e. the defined flatness may not be exceeded). If the flatness exceeds the set limit, the bending forces will transfer to the mounted load cell and negatively affect its measuring properties. Especially its

lack of sensitivity to transversal forces will be negatively affected under these circumstances.

Installation with adapter plate

For information on creating a mounting option for an M16 connection with the weighing object, see Chapter 5.3.2.2.

Installation without adapter plate

Use the drilling template to generate the load cell drilling pattern (see Chapter 4.4) according to the weighing system arrangement.

Installation with height adjustment

Create the drilling pattern for an M8 connection with the weighing object using the drilling template for each vessel base according to the weighing system arrangement (see Chapter 4.7).

5.2 Tightening torques

The corresponding tightening torques are given in the following table.

Mounting parts	Thread	Washer	Tightening torque
Adapter plate/load cell	M6-A2-70		3.5 Nm
Pendulum base/support plate	M8-A2-70	*	16 Nm
Pendulum base/bottom	M8-A2-70 or M10-A2-50		16 Nm or 14 Nm
Weighing object/set screw/cap nut	M16		59 Nm
Weighing object/height-adjustment flange	M8-A2-70		16 Nm
Adapter plate/height-adjustment threaded bolt	M16		59 Nm
Pendulum pin	M12		30 Nm
* Recommendation for the washers of M8 mounting screws:	DIN 7349 (d = 21, h = 4) or DIN 9021 or ISO 7093-2 (d = 24, h = 2)		

5.3 Assembly

5.3.1 Safety instructions

⚠ WARNING

The vessel may turn over during mounting.

Securing the vessel against tipping is imperative.

▶ Use an appropriate lifting jack.

NOTICE

The gasket and the O-rings are delicate mounting parts.

▶ Do not use any sharp-edged tools.

NOTICE

No leak-tightness of the contact surfaces present.

▶ The contact surfaces between the adapter plate and vessel foot/lug as well as between pendulum base and substructure/bottom must be clean and level to ensure a reliable seal.

Note:

The load cell is packaged together with the pendulum pin including O-ring and gasket.

The pre-mounted pendulum base is delivered with a separately-packaged O-ring.

NOTICE

Welding or lightning strike current flowing through the cell can damage it.

All electrical welding on the weighing system must be finished before mounting the load cells.

▶ When installing the load cell, immediately bypass the load cell with the flexible copper strap provided for this purpose.

During any additional electrical welding work near the load cell:

- Disconnect the load cell cables.
- Bypass the load cell.
- Make sure that the grounding clamp of the welding set is fitted as closely as possible to the welding joint.

The following must be observed during installation:

- Do not lift or transport the load cell by pulling on the cable.
- Avoid shock stress (falling down, hard shocks).

NOTICE

Changes of temperature >15 K/h may influence the measuring accuracy.

▶ Make sure to protect the load cells from direct heating or cooling effects (sun, wind, heat radiation, fan heaters), e.g., heat protection screens or heat protection housings are to be installed if necessary.

NOTICE

Force shunts may cause measuring errors.

▶ All incoming and outgoing lines (hoses, pipes, cables) must be coupled to the measured object as flexibly as possible.

5.3.2 Mounting the weighing module

Note:

The following describes how to mount the load cell with the adapter plate PR 6061/00S (see Chapter 13.4).

The operations must be performed at all supporting points (e.g. vessel foot) of the weighing object (e. g. vessel).

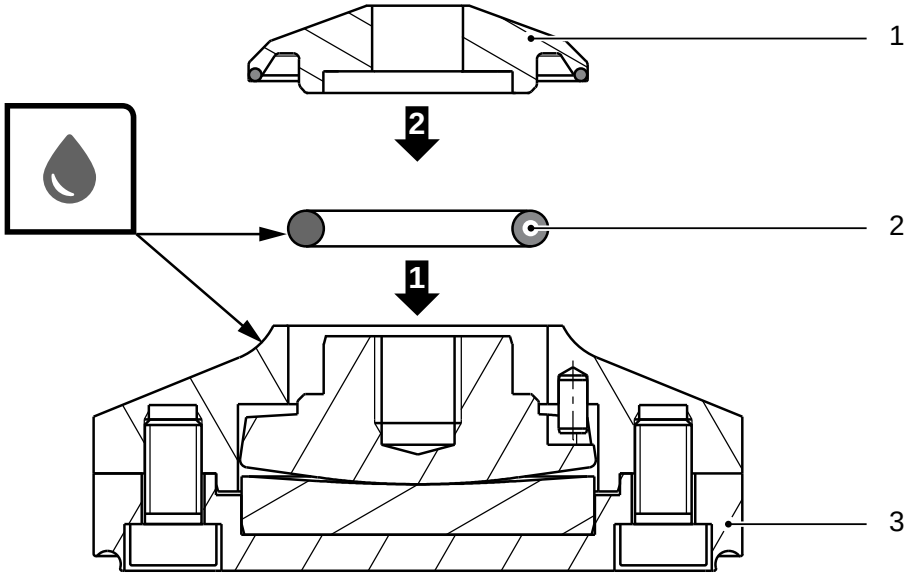

1. Remove the O-ring (2) from the packaging of the load cell.

NOTICE

The restoring force is not suitable for the load cell.

▶ Use only the O-ring supplied with the load cell.

2. Remove cap (1) of the pendulum base (3).
3. Apply the grease on the O-ring (2) and the bearing surface of the cap O-ring (1) (see symbol in the figure).

   Order no. see Chapter 12.
4. Insert the O-Ring (2) into the pendulum base and re-attach the cap.

Note:

The cap (1) lies loose on the pendulum base (3).

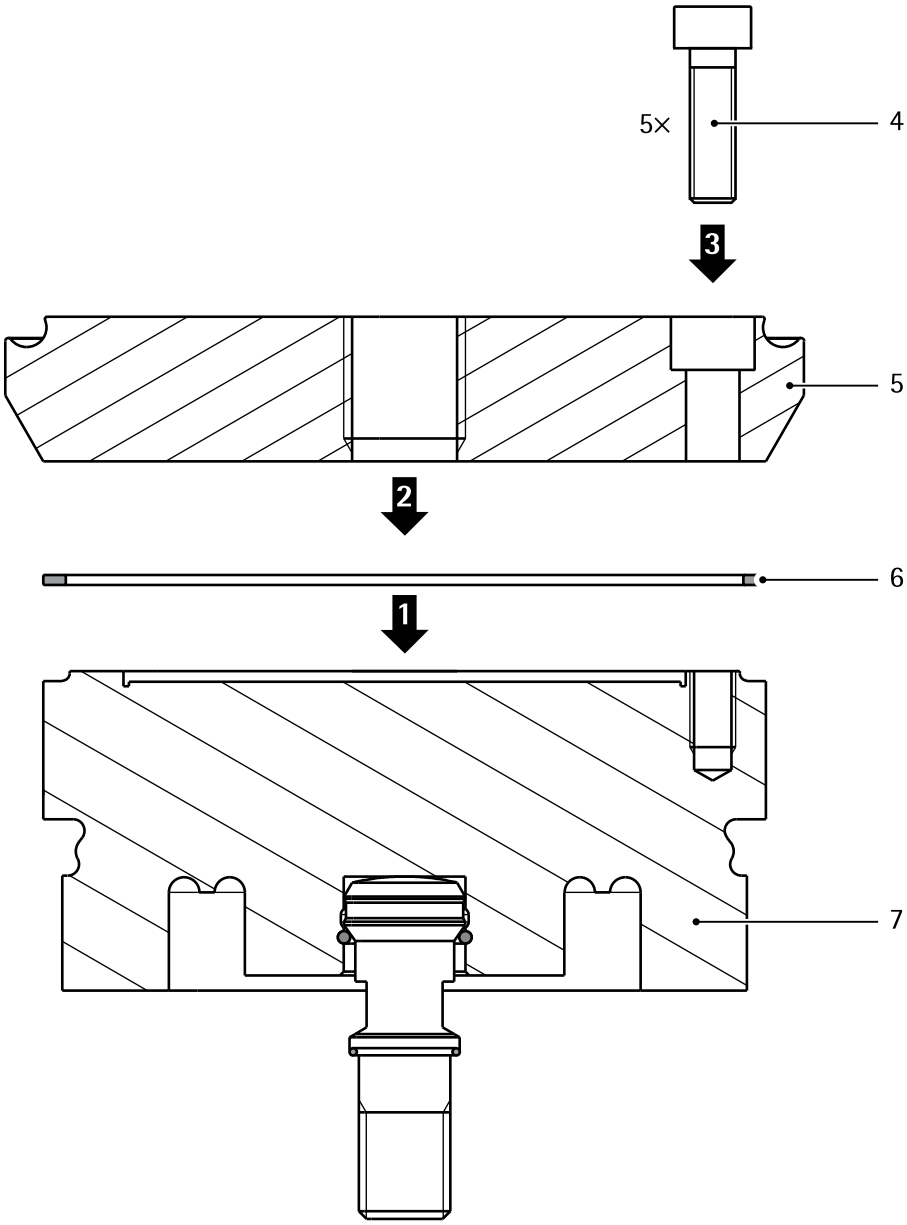

5. Check if all threaded holes required for mounting in the vessel foot/lug are provided.
6. Place gasket (6) into the corresponding groove of the load cell (7).
7. Screw adapter plate (5) onto the load cell using screws (4; 5x M6). It is essential to observe the tightening torques of the screws (see Chapter 5.2).
8. Check that the gasket is positioned correctly (6).
9. As needed, loosen the screws, correct the position and tighten the screws again.

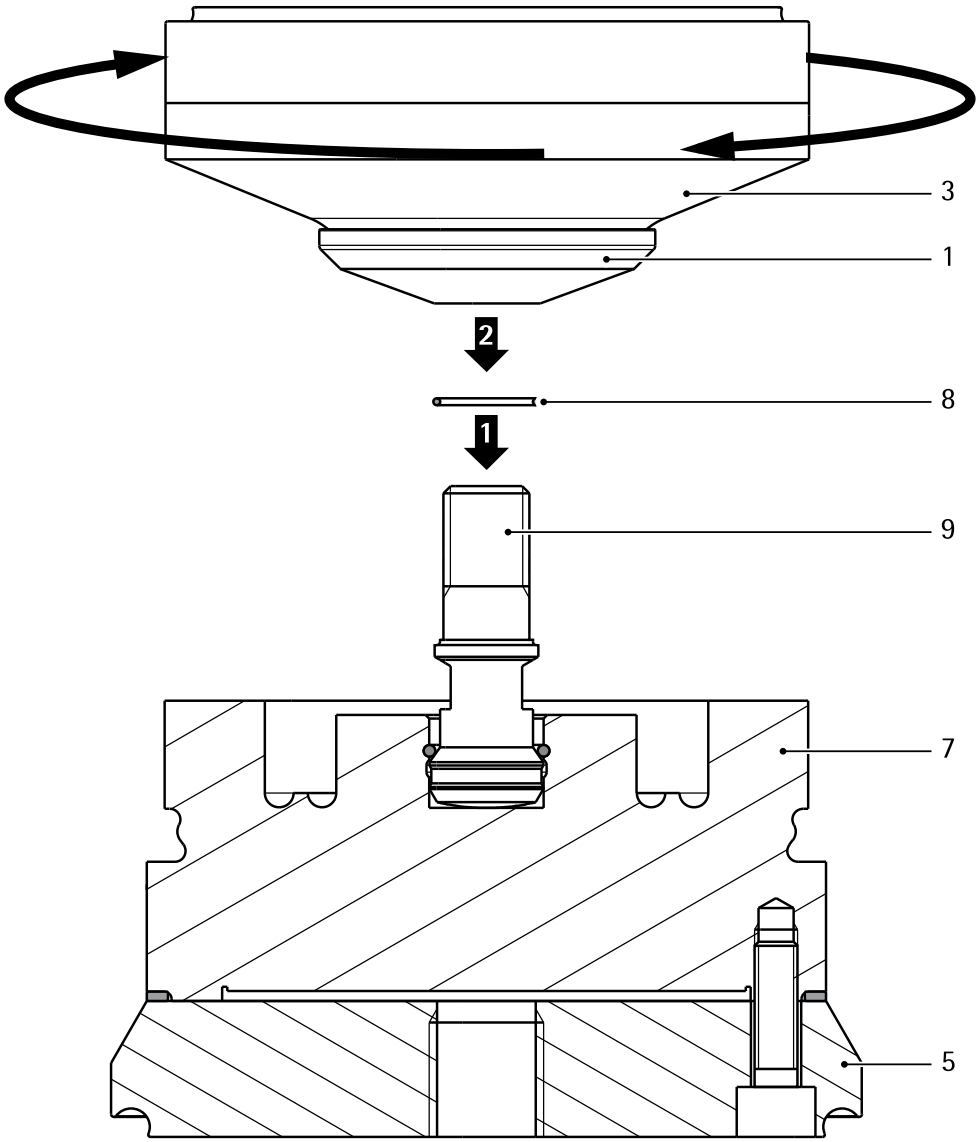

10. Turn over the adapter plate (5) with load cell (7) and place it on a flat surface.
11. Insert O-ring (8) into the groove of the pendulum pin (9).

Note:

The cap (1) lies loose on the pendulum base (3).

12. Firmly hold the cap (1) while screwing the pendulum base (3) onto the pendulum pin (9), then tighten. Make sure to use the correct tightening torque (see Chapter 5.2).

5.3.2.1 Installing the transport lock

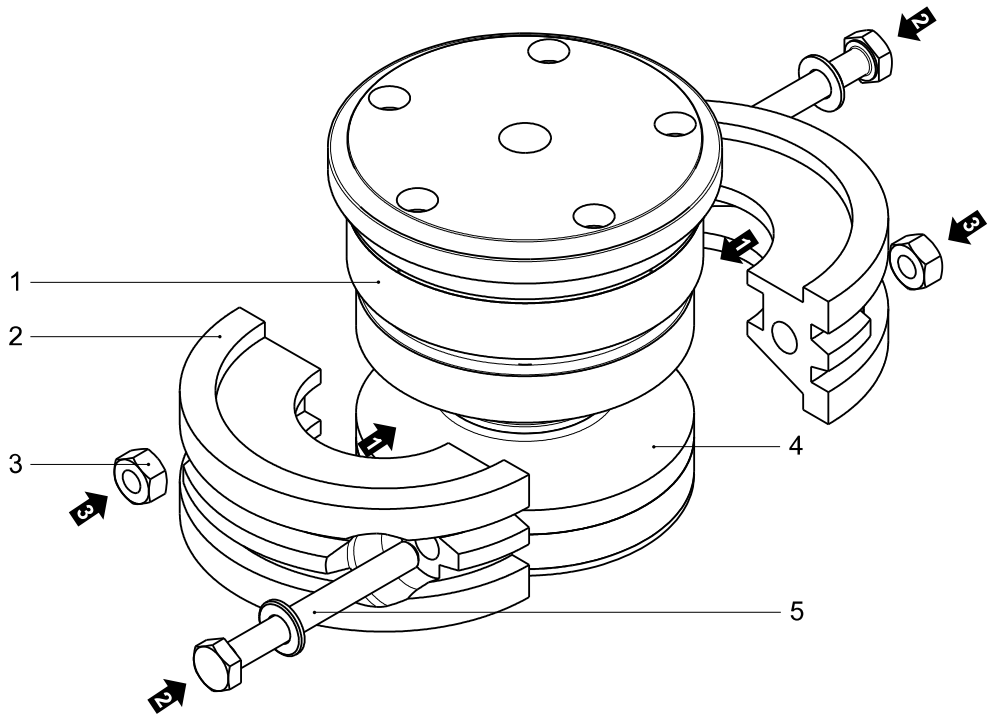

1. Slide both half-shells (2) between the load cell (1) and pendulum base (4).
2. Push both screws (5) with washers through the drill holes of the half shells and connect them together by tightening the nuts (3).
3. After assembly of the weighing object (e. g. container), remove both half-shells.

5.3.2.2 Assembly without height adjustment

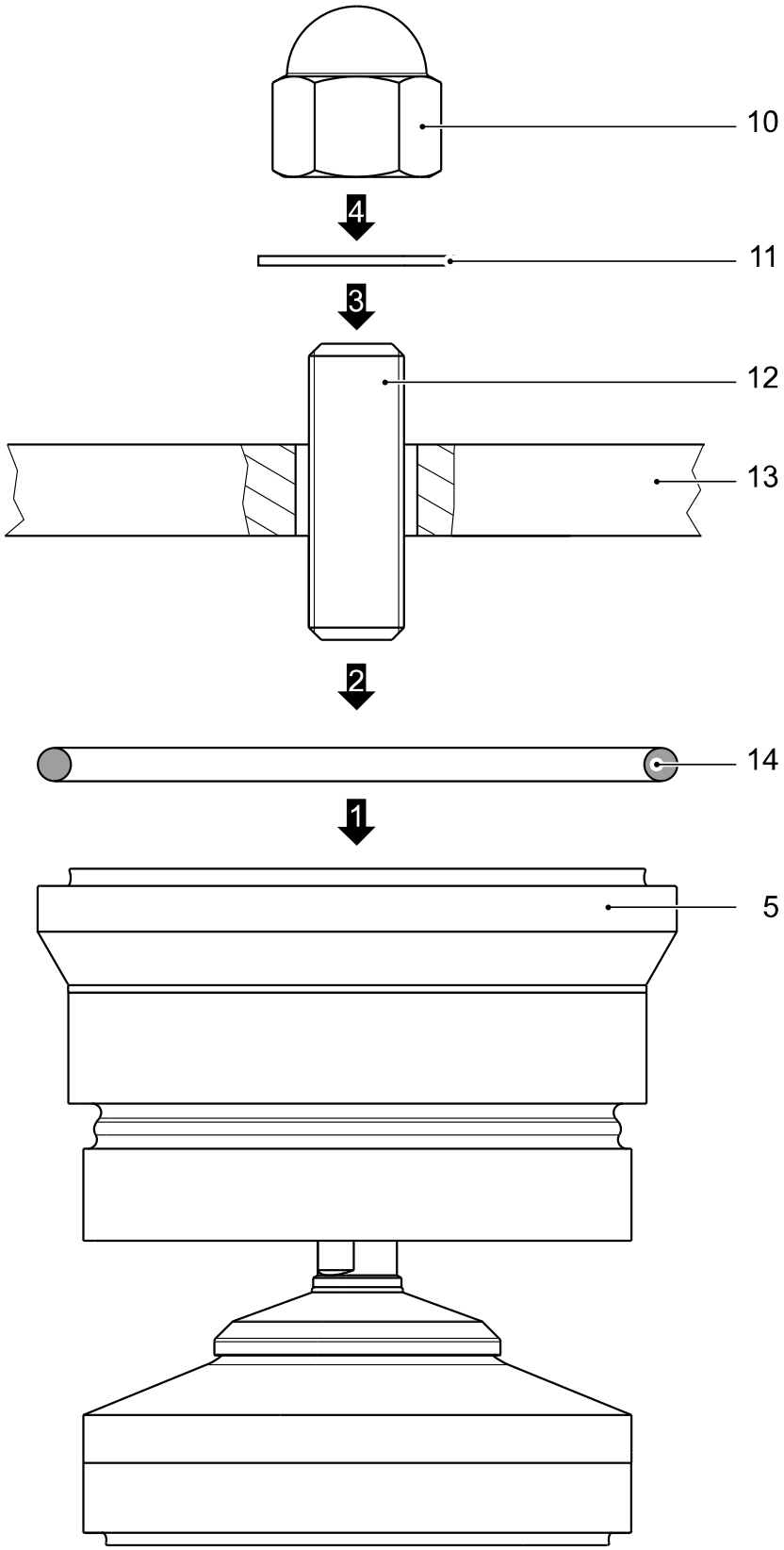

Representation without transport lock

1. Insert the O-ring (14) into the groove of the adapter plate (5).
2. Screw the set screw (12) into the adapter plate (5).
3. Assemble the complete module on the vessel foot/lug (13) using the disk (11) and cap nut (10). Make sure to use the correct tightening torques (see Chapter 5.2).

Note:

If the vessel foot has an M16 drill hole, the set screw (12) can be screwed in directly.

5.3.2.3 Assembly with height adjustment

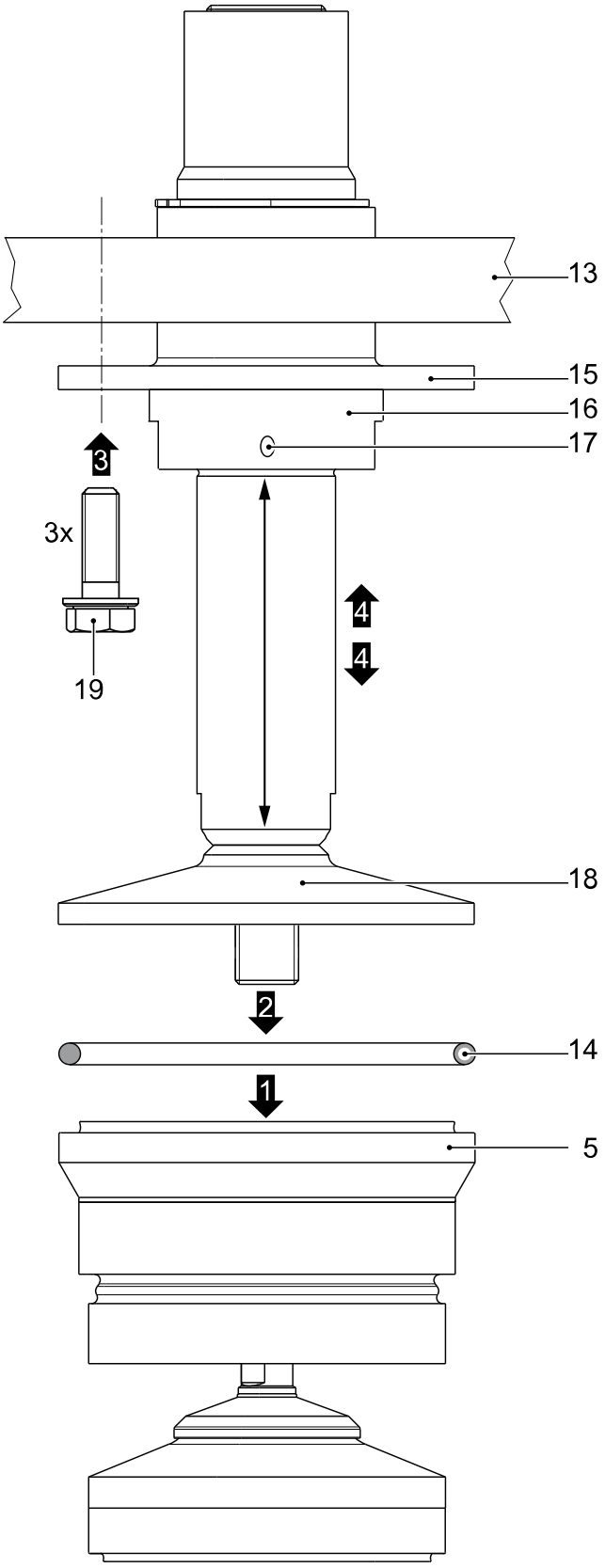

Representation without transport lock

Note:

The following tools are required:

- Screwdriver SW13 for M8 screws (19).
- Screwdriver SW30 for adapter plate screws (5).
- Screwdriver SW30 for height adjustment using adjustment sleeve (16).
- 2.5 mm Allen key for securing the height adjustment.

1. Fit flange (15) to the vessel foot (13). Make sure to use the correct tightening torques (see Chapter 5.2).
2. Insert the O-ring (14) into the groove of the adapter plate (5).
3. Screw the height adjustment (18) into the adapter plate (5). Make sure to use the correct tightening torques (see Chapter 5.2).
4. Loosen the 2 pin screws (17).
5. Adjust the height using the adjustment sleeve (16).

   The arrow on the height adjustment limits the adjustment range (80...160 mm).
6. Secure the adjustment using 2 pin screws (17).

5.3.2.4 Assembly steps for frame mounting

Note:

The transport and installation kit PR 6061/06S facilitates the centering of the hygienic weighing module Novego® during installation, see Chapter 13.7.

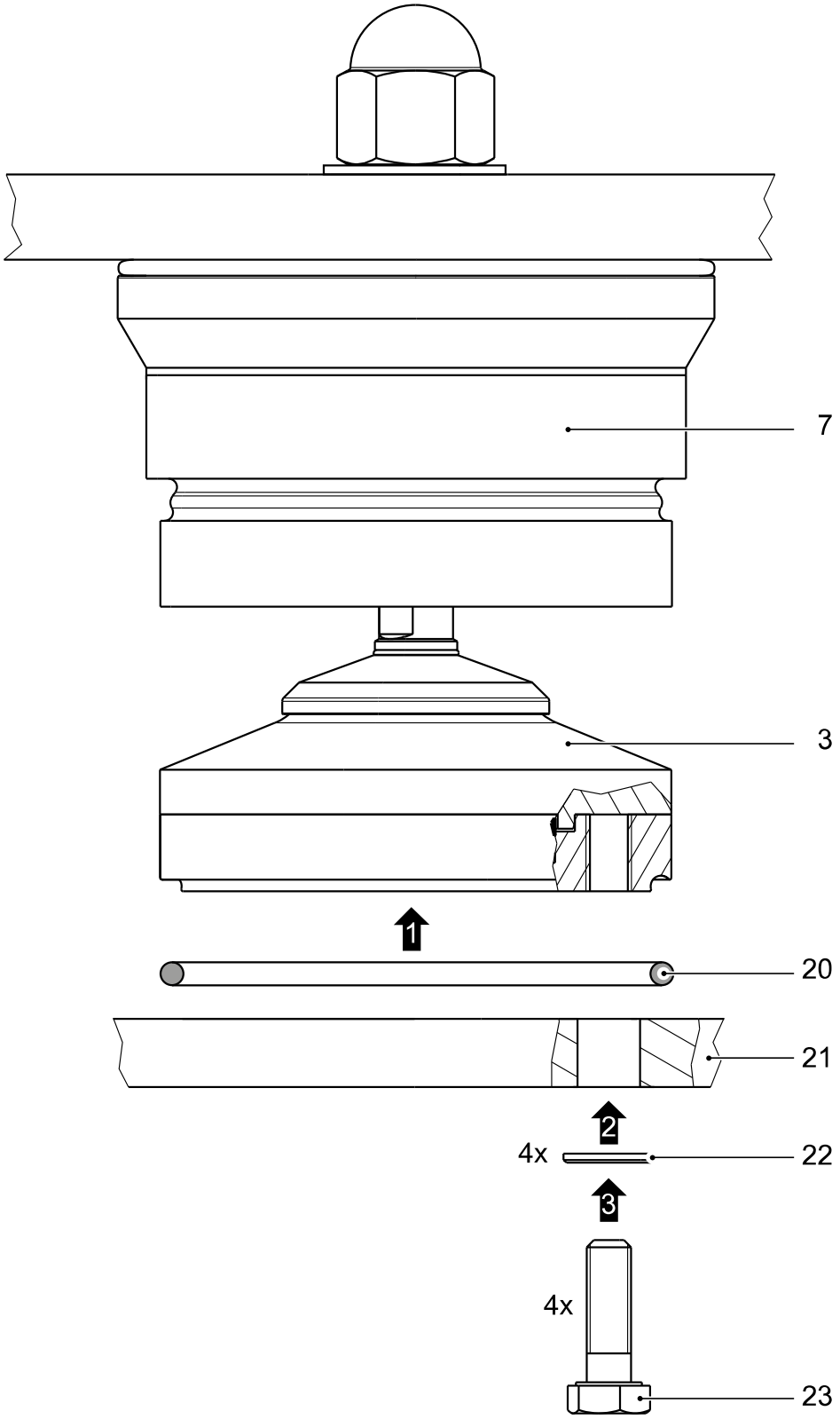

Representation without transport lock or transport and installation kit PR 6061/06S

1. Place the weighing object (e.g. vessel) including the weighing modules hanging on it onto the substructure (21).

2. Employ the appropriate lifting tool to slightly lift the container or every position with load cell (7) individually so that the pendulum base (3) can be turned and the threaded holes in the pendulum base can be aligned with the holes in the substructure (21).
3. Insert the O-ring (15) into the groove of the pendulum base.
4. From below, screw the pendulum base (3) to the substructure (21) screws (22, washer 4×; 23, screw 4× M8). Always comply with the strength classes and tightening torques of the connector elements (see Chapter 5.2).

NOTICE

Never vertically straighten up a tilted pendulum base by pulling on the screws.

▶ It is essential to observe a tolerance of ≤1 mm (see Chapter 5.1.1).

5.3.2.5 Installation steps for ground installation without tilt correction

Note:

The transport and installation kit PR 6061/06S facilitates the centering of the hygienic weighing module Novego® during installation, see Chapter 13.7.

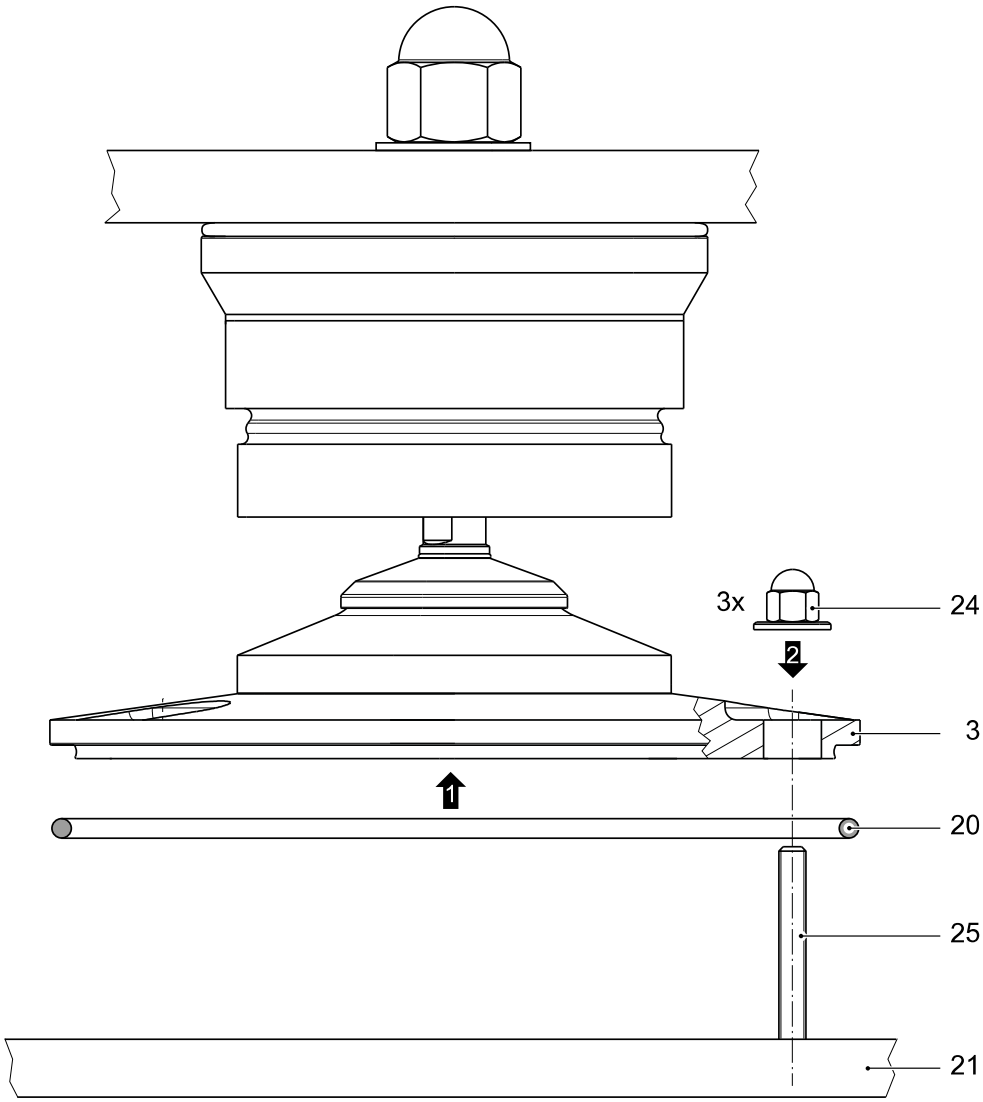

Representation without transport lock or transport and installation kit PR 6061/06S

1. Slowly lower the weighing object (e.g. vessel) including the attached weighing modules towards the bottom (21). While doing so, align the drill holes of the pendulum bases (3) over the threaded bars (25).
2. Insert the O-ring (20) into the groove of the pendulum base (3).
3. Tighten pendulum base (3) using nut (24). Always comply with the strength classes and tightening torques of the connector elements (see Chapter 5.2).

NOTICE

Never vertically straighten up a tilted pendulum base by pulling on the screws.

▶ It is essential to observe a tolerance of ≤1 mm (see Chapter 5.1.2).

5.3.2.6 Installation steps for ground installation with tilt correction

Note:

The transport and installation kit PR 6061/06S facilitates the centering of the hygienic weighing module Novego® during installation, see Chapter 13.7.

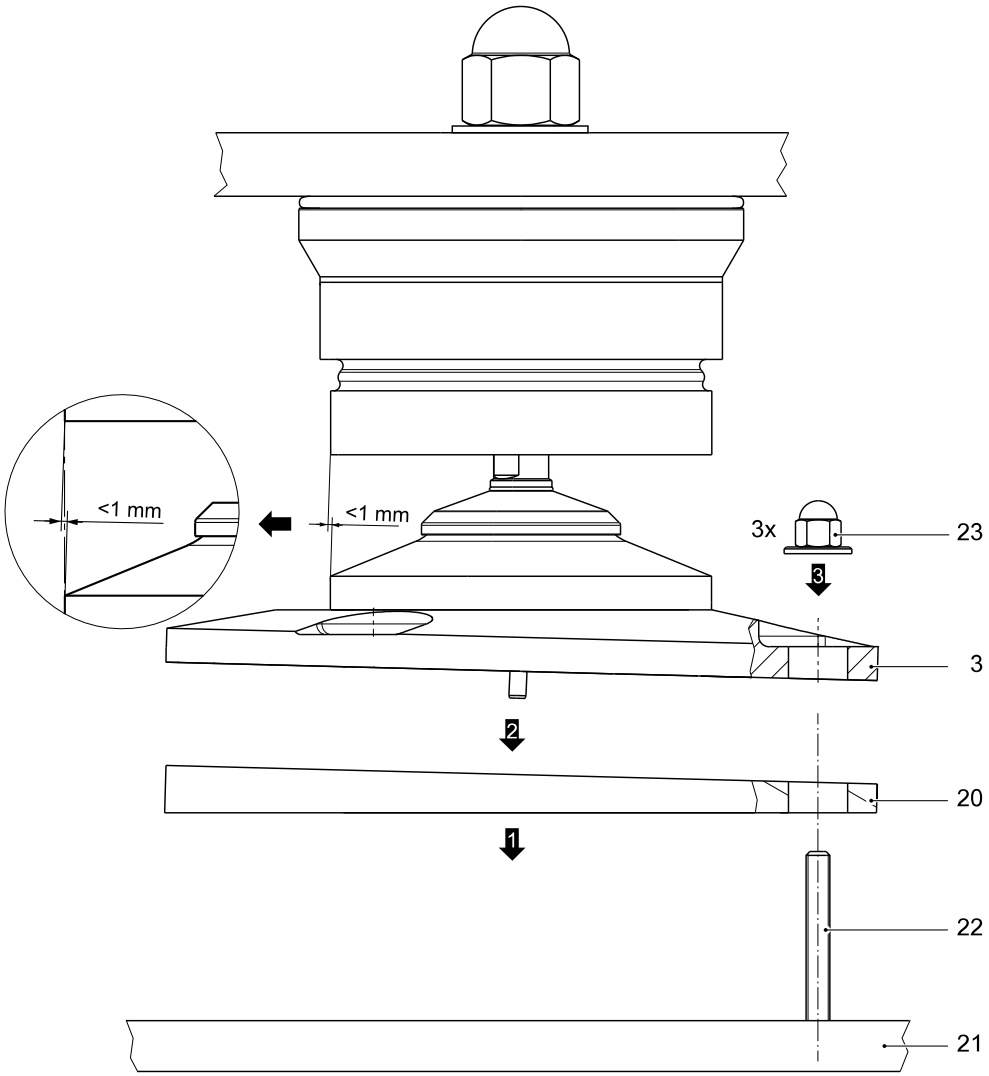

Representation without transport lock or transport and installation kit PR 6061/06S

1. Place the lower plate (20) using the 0°/3°-marking onto the bottom (see Chapter 5.1.2.2 operating step 11).
2. Slowly lower the weighing object (e.g. vessel) including the attached weighing modules towards the bottom (21). While doing so, align the drill holes of the pendulum bases (3) over the threaded bars (22).
3. Align the upper plate of the pendulum base (3) using the 0° marking of the lower plate (see Chapter 5.1.2.2 operating step 10).
4. Tighten pendulum base (3) using nut (23). Always comply with the strength classes and tightening torques of the connector elements (see Chapter 5.2).

   It is imperative to observe the maximum permissible inclination; refer to figure!

6 Connection

6.1 General information

- Protect the cable ends against contamination. Moisture must not get into the open end of the cable.
- Do not shorten the load cell connecting cable. Connect the prepared cable end and roll up the remaining cable.
- The cable screen may be connected only to the connecting terminals of the indicator.
- Keep the load cell cables away from power cables.
- The distance between measurement cables and power cables and/or components under high voltage should be at least 1 m (reference value).
- We recommend laying the load cell cables in separate cable trays or armored steel pipes.
- Power cables should be crossed at right angles while taking into account the minimum distance of 1 m (reference value).

Note:

If hum interference occurs, the cable screens should only be connected on one side.

Depending on the design of the cable junction box used, either the jumper J3 must be removed or the cable screens must be disconnected from the terminal contacts highlighted in yellow.

⚠ WARNING

When installing in potentially explosive atmospheres:

It is imperative that you follow the application-dependent installation instructions!

▶ Always check whether it is permissible to bilaterally connect the screens to the equipotential bonding.

6.2 Load cell

Color Code

rd	=	red
gn	=	green
bu	=	blue
gy	=	gray

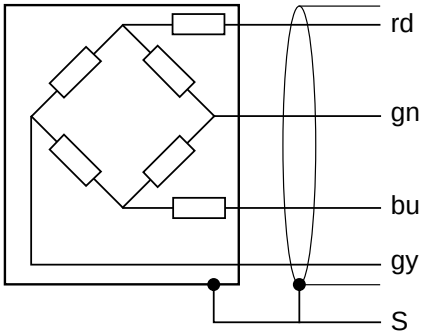

rd =	+ supply/LC in	+ supply voltage/+ load cell input
gn =	+ meas./LC out	+ measuring voltage/+ load cell output
bu =	- supply/LC in	- supply voltage/+ load cell input
gy =	- meas./LC out	- measuring voltage/- load cell output
S =	screen	Screen

6.3 Cable connections

Note:

All components are only shown schematically.

Color code

bk	=	black
bu	=	blue
gn	=	green
gy	=	gray
rd	=	red
wh	=	white

Connection example

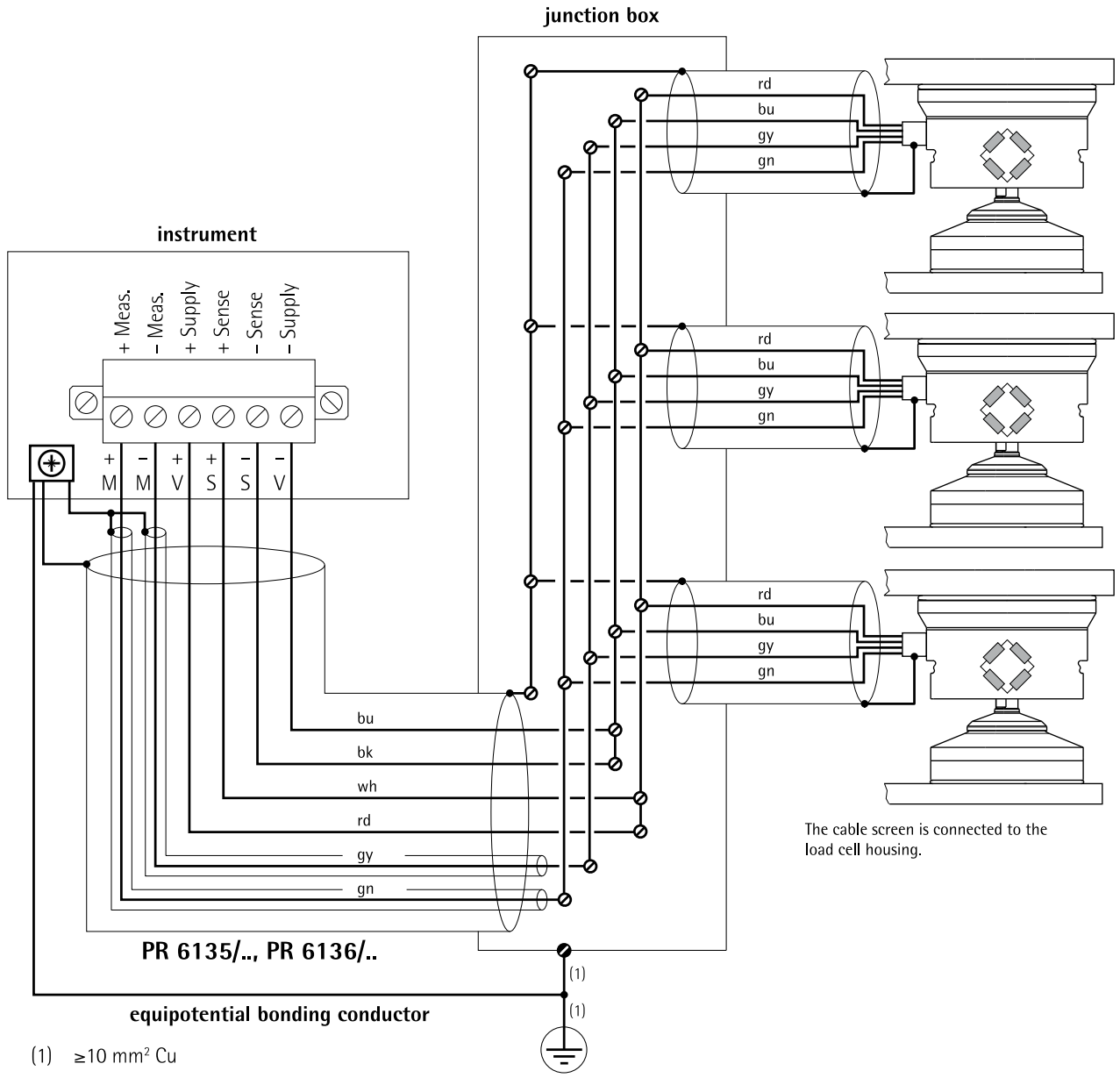

(1) ≥10 mm² Cu

7 Preparing for calibration

7.1 General notes

Note:

For calibration of the measuring system, please refer to the manual of the corresponding indicator.

7.2 Smart Calibration

When using Minebea Intec devices, we recommend always running "Smart Calibration" first.

This allows all required values to be extracted from the Calibration Certificate supplied.

- The "Hysteresis correction values for Smart Calibration" listed on the Calibration Certificate are entered for [Correction A] and [Correction B] under [Hysteresis error] - [specified] in the indicator.

  If the values are not available on the Calibration Certificate, [Hysteresis error] - [not specified] must be selected.
- The value listed under "Output at max. capacity" on the Calibration Certificate is entered in the indicator under [LC output at max. capacity].
- The value listed under "Output impedance" on the Calibration Certificate is entered in the indicator under [LC output impedance].

By performing these steps, a logical and highly accurate reading (typically better than 0.1%) is generated before the scale is even loaded for the first time.

7.3 Mechanical height adaptation

To distribute the load over the load cells as evenly as possible, height adaptation is required in systems with more than 3 load cells prior to calibration.

Procedure:

1. Place the dead load (e.g. empty vessel) onto the load cells of the scale structure.
2. Energize the load cells in parallel with a stabilized voltage (e.g.: U_{DC} = 12 V).
3. Measure the output voltages of each individual load cell by means of a digital voltmeter and compare the individual values.
   ▷ Given deviation between the output voltages of the load cells, the load on the load cell with the lowest output voltage must be increased by putting shims between mounting plate and weighing construction.
4. Lift the weighing object immediately beside the affected load cell.
5. Place sheets of metal from the set of metal sheets PR 6061/05S (also refer to Chapter 13.6) between adapter plate and scale structure.
6. Measure the output voltages of the load cells again and adjust the height of this load cell or of another one.

8 Troubleshooting

8.1 General Notes

The following hints will enable a technician to do an initial diagnostic or help in case of incorrect or non-reproducible weighing results after commissioning and calibration.

8.2 Visual inspection

Component	Possible errors
Weighing object	Are all pipes, hoses and cables free from shunt forces? Are the connections pliable and connected horizontally? Are elements with a solid connection to the scale in direct contact with the surroundings? Has friction developed between the weighing object and its surroundings (e. g. dusty openings, ...)?
Cable junction box	Has moisture intruded? Do all soldering and screw connections have secure contact?
Connecting cables	Is the sheath damaged? Has moisture intruded?
Load cell	Is the pendulum base parallel to the contact area? Is the displacement between the load cell and the pendulum base ≤1 mm? Is the sheath of the load cell cable damaged? Has moisture penetrated into the load cell cable?

8.3 Metrological controls

8.3.1 Checking the zero output signal of the load cell

- Unload load cell.
- Disconnect the load cell measuring outputs.
- Check whether the output voltage without load is within the limits.

Type	Output voltage
D1, C3	0... +0.03 mV/V

8.3.2 Checking the strain gauge bridge of the load cell

- Do not exceed the test voltage.
- Check whether the values of the resistors are within the permissible limits.

Max. test voltage

- Standard version U_{DC} = 32 V
- Intrinsically safe version (PR ../..E) U_{DC} = 25 V

Type	Input impedance (red core, blue core)	Output impedance (green core, gray core)
D1	1080 Ω ±10 Ω	1010 Ω ±2 Ω
C3	1080 Ω ±10 Ω	1010 Ω ±1 Ω

8.3.3 Checking the insulation impedance of the load cell

NOTICE

Possible destruction of load cell

- ▶ Never apply test voltage between two cores of the load cell cable.
- ▶ Insulate the load cell cores.

Max. test voltage

- Standard version U_{DC} = 100 V
- Intrinsically safe version (PR ../..E) U_{AC} = 500 V

Insulation impedance	Core – housing Core – screen Screen – housing	>5000 MΩ >5000 MΩ 0 Ω

8.3.4 Checking the insulation impedance of the connecting cable

- Disconnect connecting cable from measuring instrument and load cells.
- Insulate the cores of the connecting cable.

Insulation impedance	Core – core Core – screen	>120 MΩ × km >120 MΩ × km

9 Servicing/repairs/cleaning

9.1 Care and maintenance

9.1.1 Maintenance

The load cell PR 6261 is maintenance-free.

Load cell grease specification

- good water/media resistance
- good corrosion protection properties
- good oxidization and aging stability
- good temperature resistance
- and, where appropriate, good compatibility with foodstuffs

The requirements referred to apply when taking into account the specific operating/usage conditions.

The grease also serves as protection against wear (low friction).

9.1.2 Replacing the load cell

⚠ WARNING

The vessel may turn over during de-/mounting.

Securing the vessel against tipping is imperative.

▶ Use an appropriate lifting jack.

NOTICE

Defects in the load cell may occur.

▶ Do not lift or transport load cells by pulling the cable.

Note:

The following section describes how to replace load cells in a weighing system with 3 weighing modules.

Example: Frame mounting

1. Release the load cell cable in the junction box, pull it out carefully and roll it up.

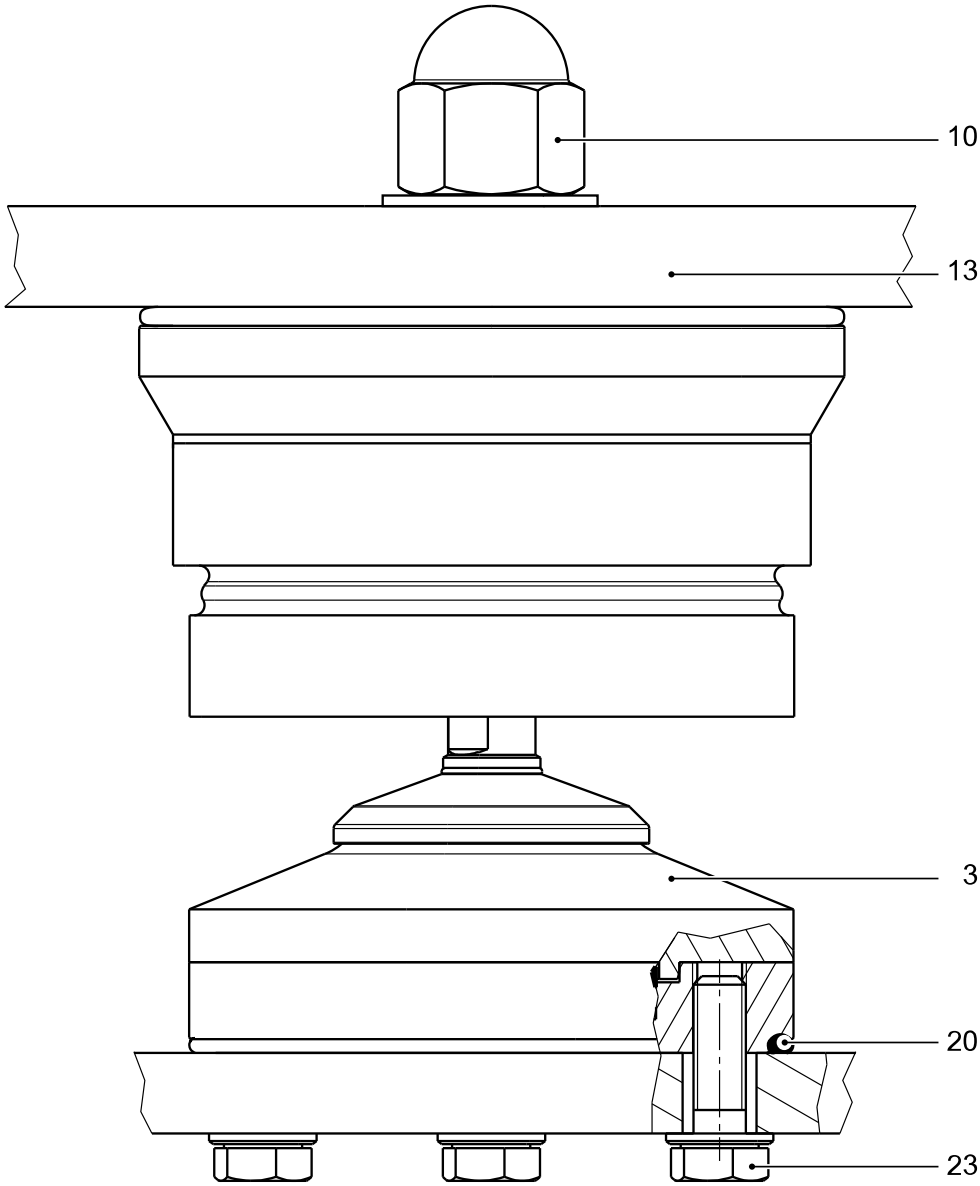

2. Loosen the screws (23) in the pendulum base (3) of the defective weighing module.

Note:

Take care to not lose the O-ring (20)!

3. Use an appropriate lifting tool to carefully lift the weighing object (13) to the position of the defective weighing module.
   ▷ The weighing module is now only connected to the weighing object.
4. Loosen the screw connection (10) in the weighing object (13) carefully and place the weighing module on a stable surface.

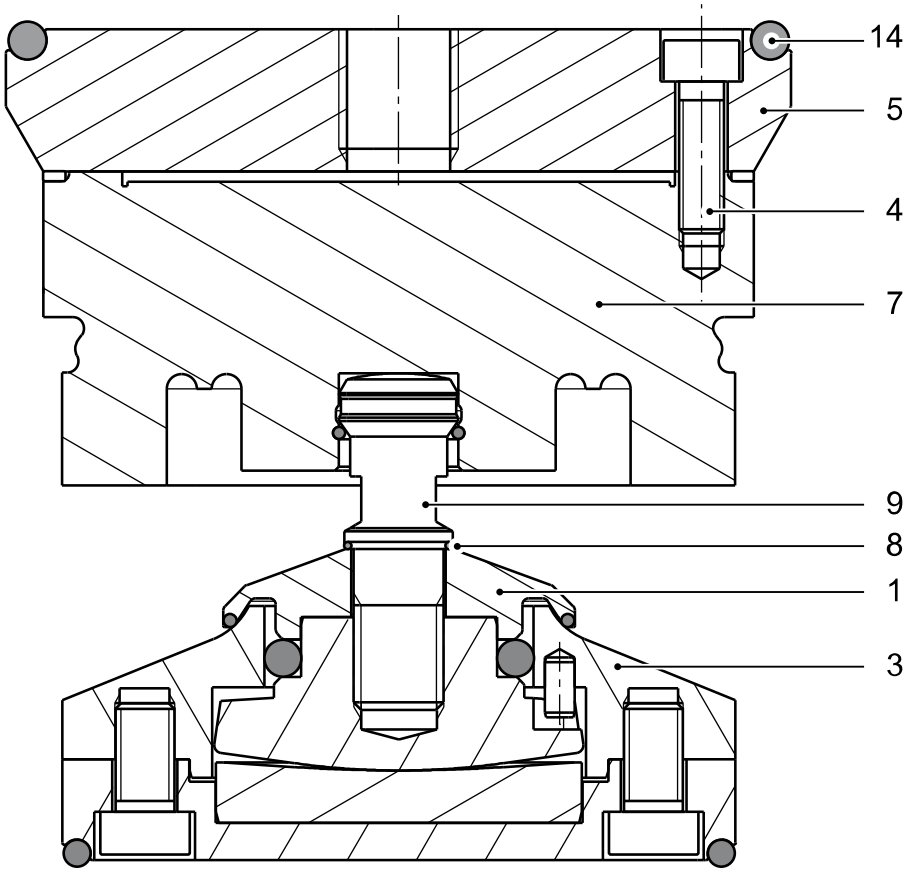

5. Loosen the screws (4) in the adapter plate (5); next, remove the adapter plate from the load cell (7).

Note:

Take care to not lose the O-ring (14)!

6. Unscrew the pendulum base (3) from the pendulum pin (9) and remove the O-ring (8).

Note:

Take care to not lose the cap (1)!

The blue coating on the thread is a screw-securing adhesive that can be re-used multiple times.

7. Mount the new load cell as described in working steps 5-11 in Chapter 5.3.2 and 1-2 in Chapter 5.3.2.2.

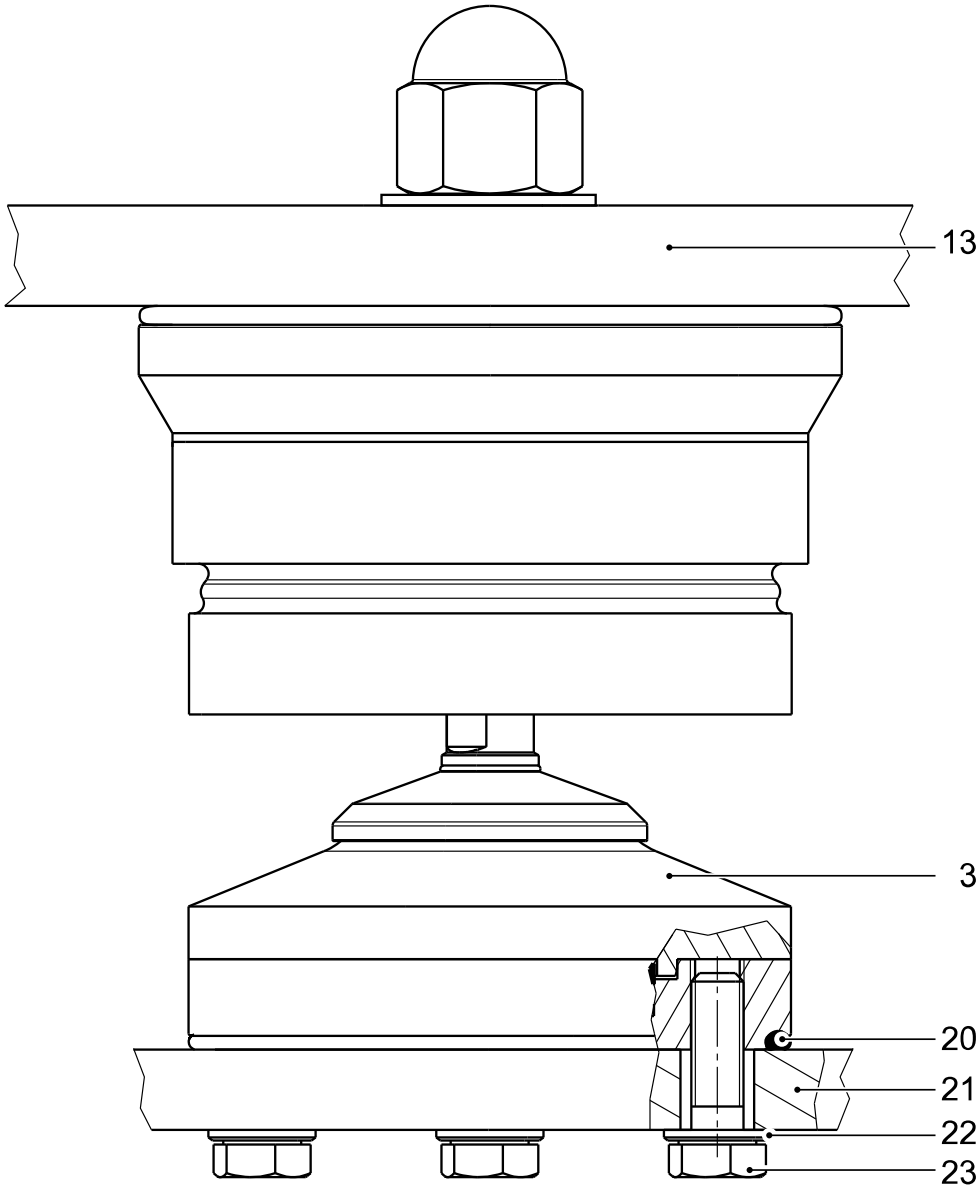

8. Carefully lower the weighing object (13) mounted on the weighing module onto the substructure so that the threaded holes in the pendulum base can be aligned with the holes in the substructure.
9. Insert the O-ring (20) into the groove of the pendulum base (3).
10. From below, screw the pendulum base (3) to the substructure (21) screws (22, washer 4×; 23, screw 4× M8). Always comply with the strength classes and tightening torques of the connector elements (see Chapter 5.2).
11. Remount the load cell cable into the junction box, see Chapter 6.3 or the installation manual relating to the junction box.

9.2 Repairs

The load cell PR 6261 is designed to be as robust as possible for the required measuring accuracy and is highly reliable.

Should an electrical or mechanical defect nevertheless occur, the load cell must be replaced.

Note:

See Chapter 9.1.2.

Load cell repair is not possible.

9.3 Cleaning

The weighing module is easy to clean. It can be spray-washed with water (see IP69 specification).

For this purpose, spray the water jet from top to bottom and around the weighing module.

NOTICE

Some cleaning agents may not be compatible with the weighing module material.

- When using cleaning agents, ensure that their compatibility with the weighing module material has been tested and approved (see Chapter 4.2).

10 Disposal

If the packaging is no longer required, please take it to your local waste disposal facility and/or a reputable disposal company or collection point. The packaging largely consists of environmentally friendly materials which can be used as secondary raw materials.

It is not permitted—even for small businesses—to dispose of this product with the regular household waste or at collection points run by local public waste disposal companies.

EU legislation requires its Member States to collect electrical and electronic equipment and dispose of it separately from other unsorted municipal waste so that it can then be recycled.

Before disposing of or scrapping the product, any batteries should be removed and taken to a suitable collection point.

Please see our T&Cs for further information.

Service addresses for repairs are listed in the product information supplied with the product and on our website (www.minebea-intec.com).

We reserve the right not to accept products that are contaminated with hazardous substances (ABC contamination) for repair.

Should you have any further questions, please contact your local service representative or our service center.

Minebea Intec GmbH

Repair center

Meiendorfer Strasse 205 A

22145 Hamburg, Germany

Phone: +49.40.67960.666

service.HH@minebea-intec.com

11 Options

11.1 PR 6061/02S pendulum base for frame mounting for Novego®

Order no. 9405 360 61022

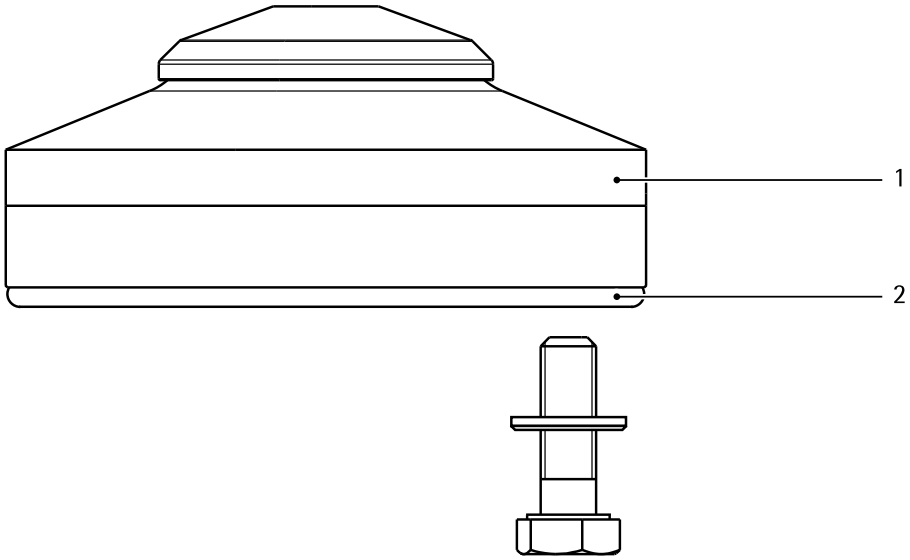

No.	Identifier
1	Pendulum base
2	O-ring
The following items are not shown:	
3	Drilling template
4	Installation overview
The following fastening material is required for mounting:	
	Washer (4×)
	Screw M8×24(4×)

11.2 PR 6061/03S pendulum base for ground installation for Novego®

Order no. 9405 360 61032

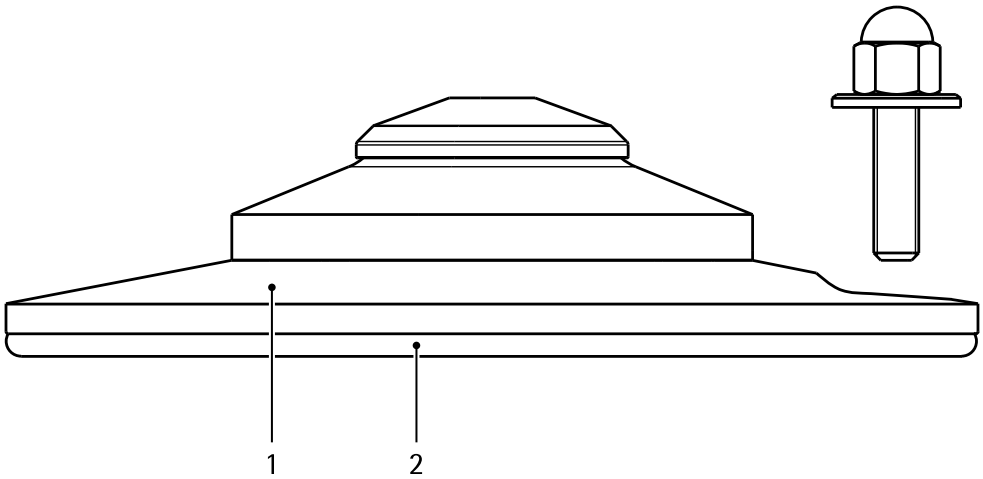

No.	Identifier
1	Pendulum base
2	O-ring
The following items are not shown:	
3	Drilling template
4	Installation overview
The following fastening material is required for the foundation mounting:	
	Threaded bar M8(3×)
	Cap nut M8 (3×)

11.3 PR 6061/04S pendulum base for ground installation with tilt correction for Novego®

Order no. 9405 360 61042

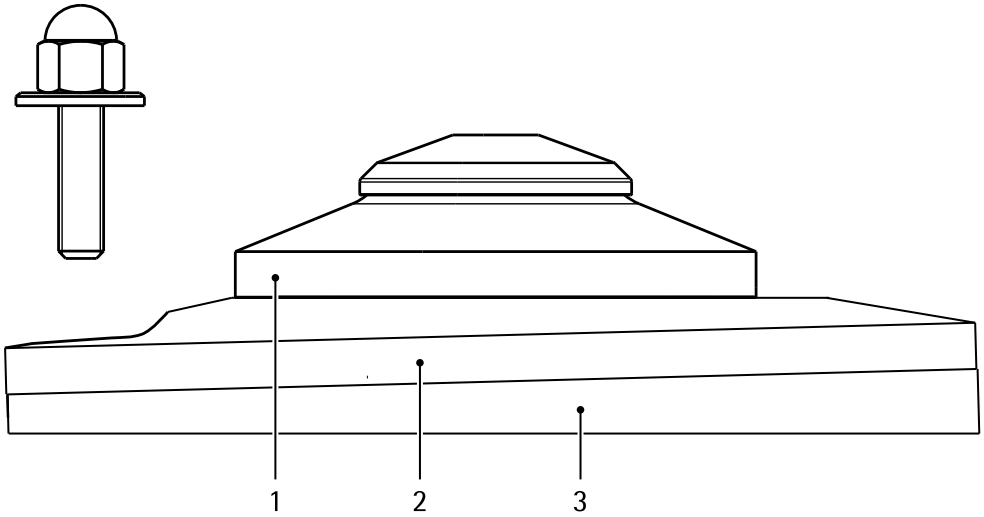

No.	Identifier
1	Pendulum base, incl. No. 2 + 3
2	upper ground plate
3	lower ground plate
The following items are not shown:	
4	Spirit level
5	drilling and mounting template
6	Installation overview
The following fastening material is required for mounting:	
	Threaded bar M8(3×)
	Cap nut M8 (3×)

12 Replacement parts

No.	Description	Max. capacity	Order no.
1	Threaded bar with cover nut (for PR 6261/00S)		5312 506 98001
2	Pendulum, top	25...50 t	5312 506 98002
3	Threaded bar with cover nut (for PR 6261/05S)		5312 506 98003
4	O-ring kit	125 kg	5312 530 58010
5	O-ring kit	250 kg, 500 kg	5312 530 58011
6	O-ring kit	1 t, 2 t	5312 530 58012
7	Load cell grease 4× 5 g		5312 390 12001
8	Fastening set incl. connector (Connexx modul)		5312 693 98162

13 Accessories

13.1 Connecting cables

To connect the junction box to the weighing electronics, we recommend using the following connecting cables:

No.	Description	Order no.
1	PR 6135/××	9405 361 35××2
2	PR 6135/01A (armored)	9405 361 35019
3	PR 6136/×× (for installation inside the explosion-hazarded area)	9405 361 36××1
4	PR 6136/01A (armored, for installation inside the explosion-hazarded area)	9405 361 36019

13.2 Cable junction boxes

We recommend using the following junction boxes:

No.	Description	Order no.
1	PR 6130/04 (aluminum, 1–4 load cells, IP67)	9405 361 30044
2	PR 6130/34Sa (1.4301, 1–4 load cells, IP68, IP69, verifiable)	9405 361 30344
3	PR 6130/35S (1.4301, 1–4 load cells, IP68, IP69, verifiable)	9405 361 30354
4	PR 6130/64Sa (1.4301, 1–4 load cells, IP68, IP69, verifiable, ATEX)	9405 361 30644
5	PR 6130/65S (1.4301, 1–4 load cells, IP68, IP69, verifiable, ATEX)	9405 361 30654

13.3 Connexx module

13.3.1 Specifications

13.3.1.1 Equipment supplied

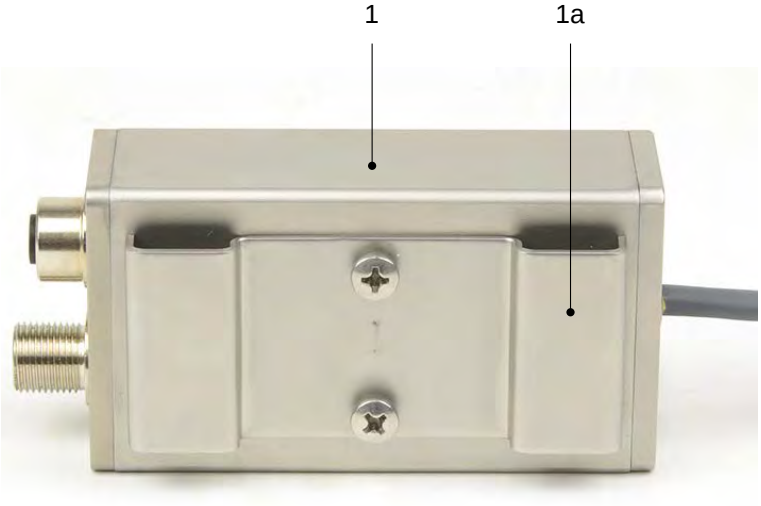

No.	Description
1	Connexx module incl. retaining plate (1a)
Not shown:	
2	Fixing bracket incl. knurled screw
3	Washers (4×; for various screw sizes)
4	Rail holder

13.3.1.2 Dimensions

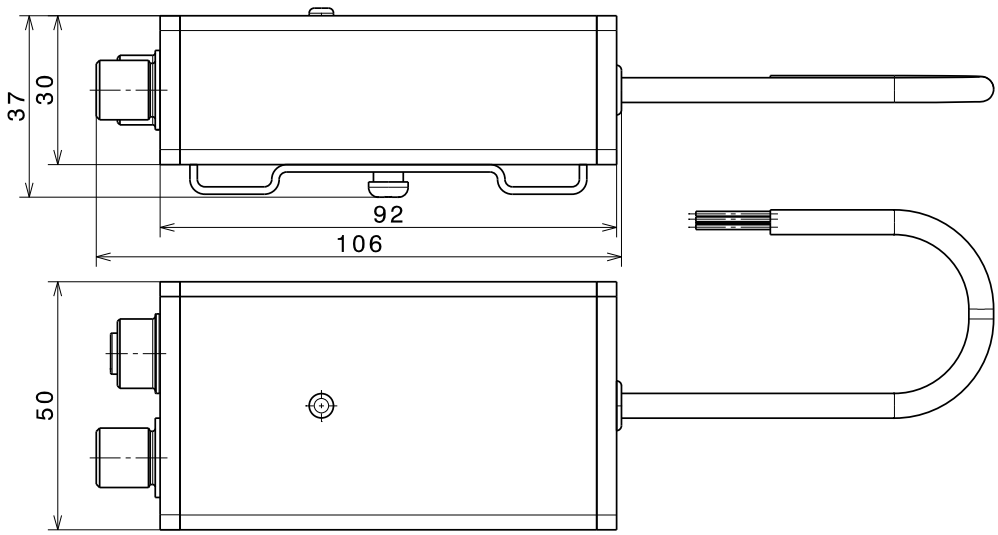

All dimensions in mm

13.3.2 Connection of Connexx modules

The load cell is firmly attached to the Connexx module.

The load cell cable is 0.7...1.0 m long.

The mounting options for the module are described in Chapter 13.3.3.

Cable lengths

Connecting part	Recommended length
Between the individual Connexx modules	max. 10 m

Connections

Color abbreviations	Color	Description
wh	white	+ Supply voltage
bu	blue	- Supply voltage
bn	brown	GNDC
gy gr/ye	gray green/yellow	CAN_L bus signal (material PUR) CAN_L bus signal (material PVC)
bk	black	CAN_H bus signal

Connection example, shown as a diagram

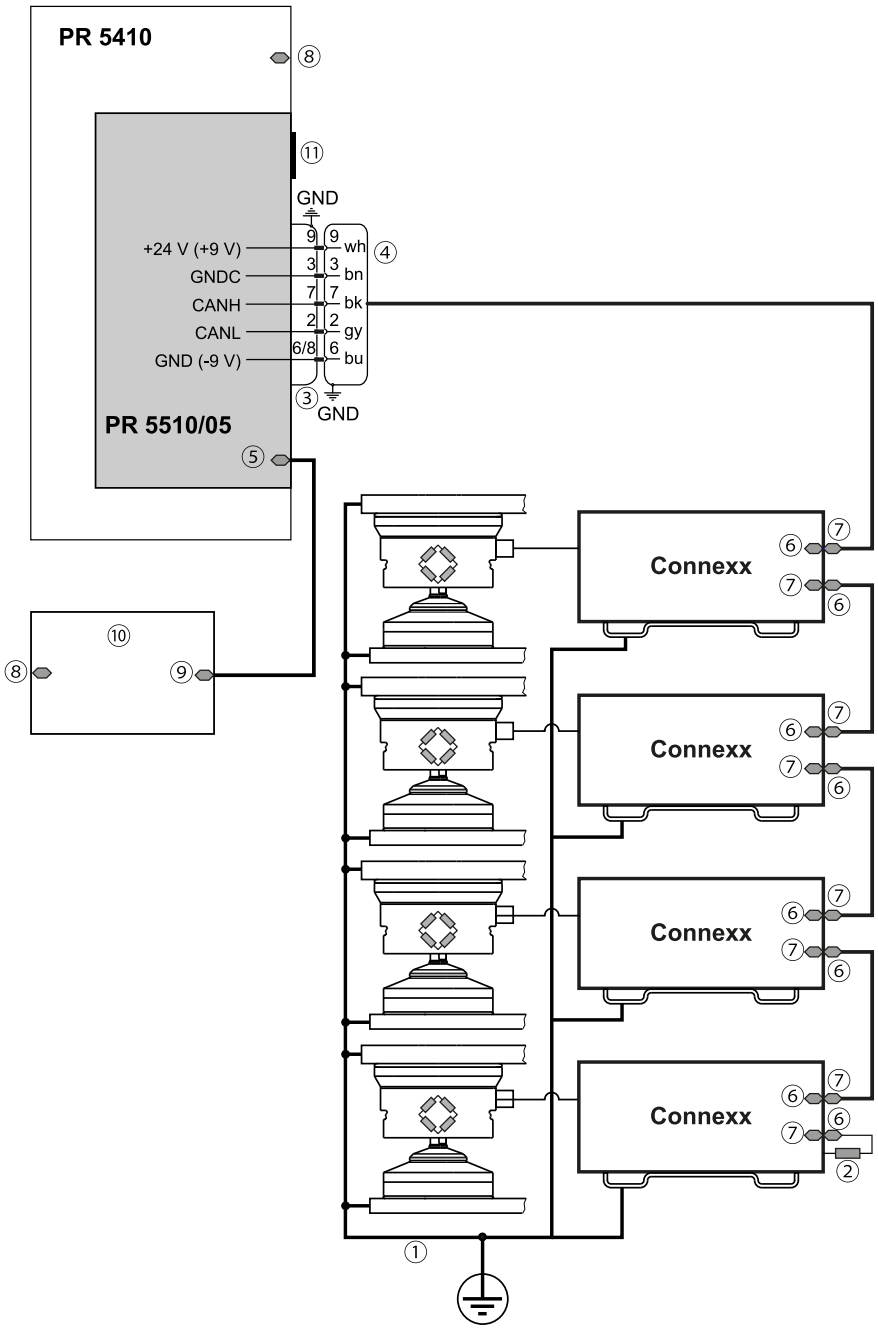

① Potential equalization
② Terminating resistor
③ D-Sub 9-pin plug connector, male
④ D-Sub 9-pin plug connector, female
⑤ Input voltage U_{DC} = 24 V (only for connected external voltage supply)
⑥ M12 plug connector, male
⑦ M12 plug connector, female
⑧ Voltage supply U_{AC} = 230 V
⑨ Output voltage U_{DC} = 24 V (only for connected external voltage supply)
⑩ External voltage supply (only required when connecting >4 Connexx modules)
⑪ Switch to turn on a bus-terminating resistor

13.3.3 Mounting options

The Connexx module is delivered with mounting elements.

It is possible to mount the Connexx module in the following ways:

- Mounting using a retaining plate, see Chapter 13.3.3.1
- Mounting using a mounting bracket, see Chapter 13.3.3.2
- Mounting using a mounting rail holder, see Chapter 13.3.3.3

13.3.3.1 Mounting using a retaining plate

When using a retaining plate, the Connexx module is attached to the weighing device (e.g. the leg of a container).

Note:

Minebea Intec recommends using a stainless-steel cable tie when mounting using a retaining plate.

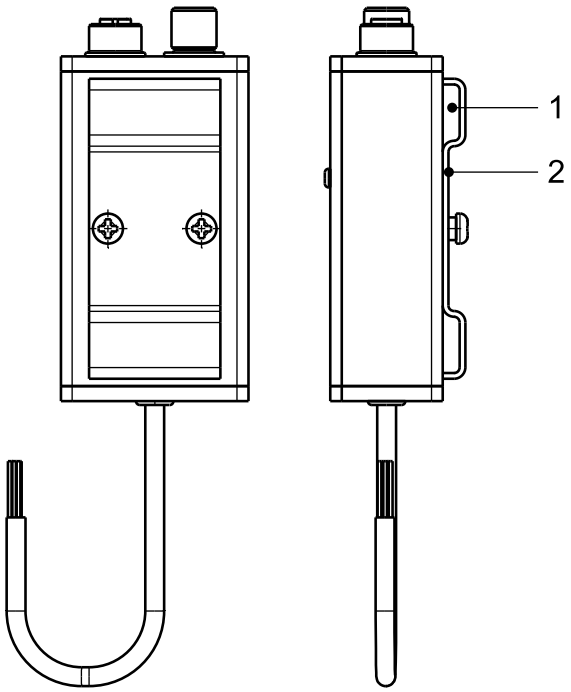

▶ Thread the stainless-steel cable tie through the lugs (1) on the retaining plate (2) and attach to the weighing device.

13.3.3.2 Mounting using a fixing bracket

When using a fixing bracket, the Connexx module is attached to the mounting kit.

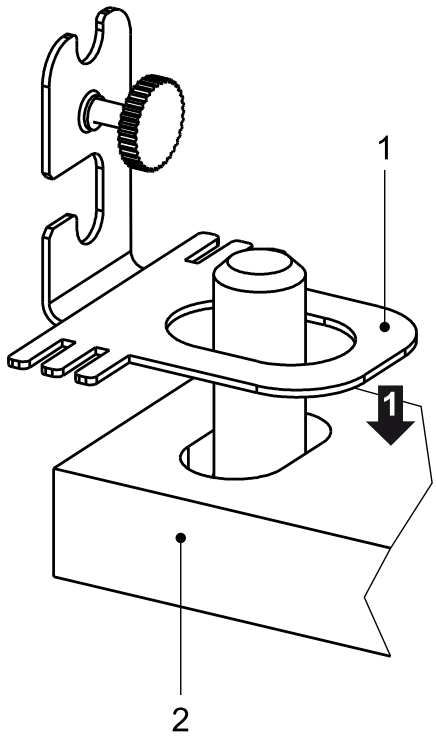

1. Place the fixing bracket (1) on the lower plate (2) of the mounting kit.

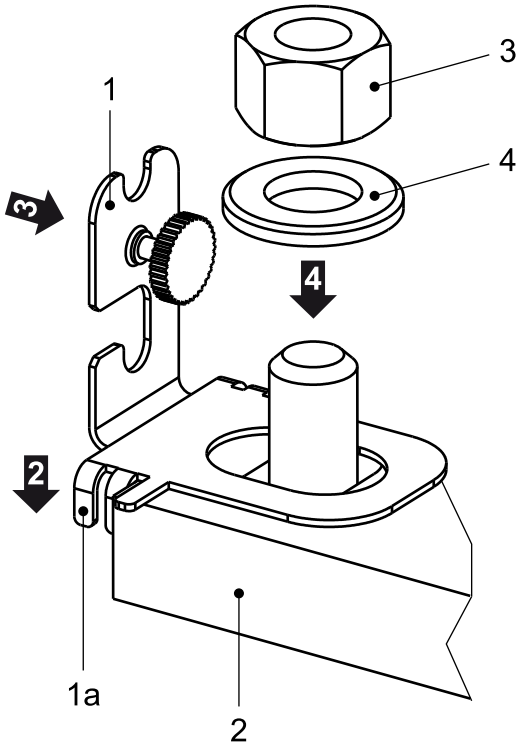

2. Depending on the mounting kit, bend the appropriate lugs (1a) downwards using a tool to prevent the fixing bracket from twisting.
3. Slide the fixing bracket (1) onto the lower plate (2) of the mounting kit.
4. Place one of the enclosed washers (4) over the bolt and tighten the nut (3).

   The fixing bracket is now secured against twisting.

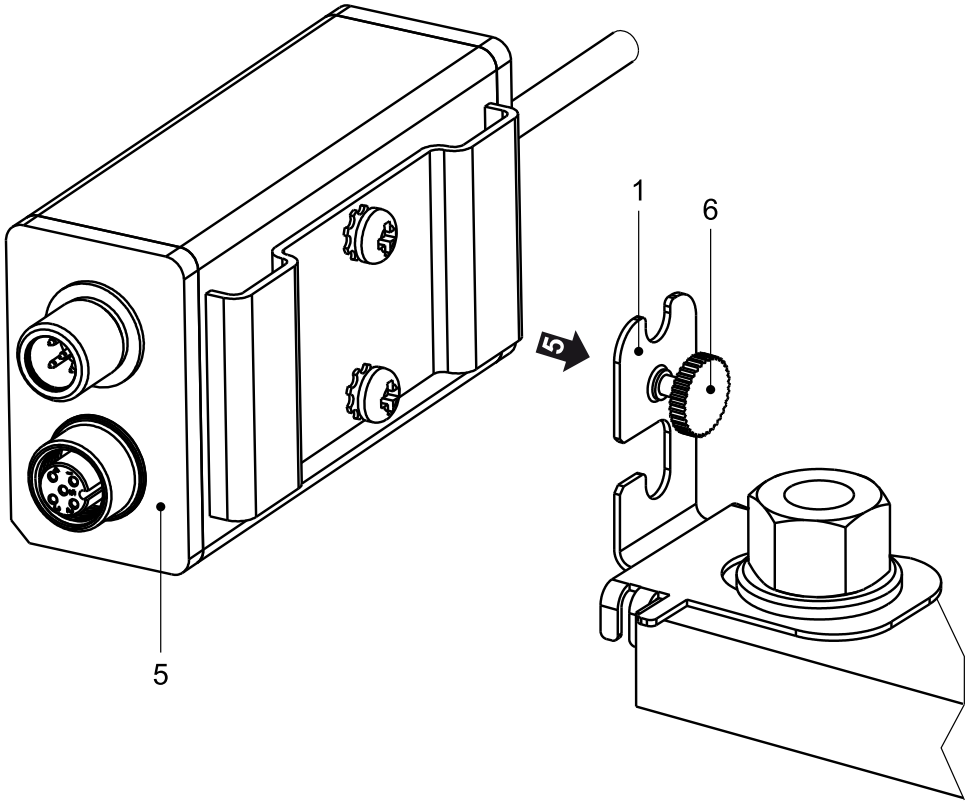

5. Mount the Connexx module (5) on the fixing bracket (1).
6. Tighten the knurled screw (6) by hand to fix the module in place.

13.3.3.3 Mounting using a mounting rail holder

When using a mounting rail holder, the Connexx module is attached to the weighing device (e.g. frame with a mounting rail).

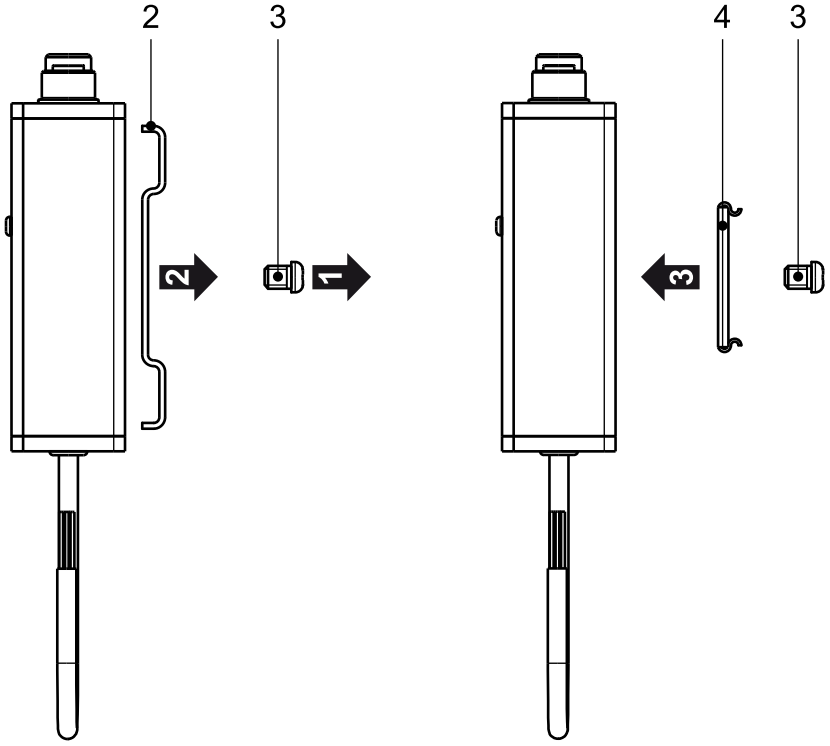

1. Remove the screw (3).
2. Remove the retaining plate (2).
3. Install the rail holder (4) and tighten the screws (3).
4. Click the Connexx Module into the rail holder.

13.3.4 Connecting parts for the Connexx module

To connect the Connexx module, the following connecting parts are required:

No.	Description	Order no.
1	PR 5510/05 CANopen interface for PR 5410	9405 355 10051
2	PR 6154/03 Connexx connecting kit for three load cells (comprising: 2× PR 6155/05, 1× PR 6152/25, 1× PR 6153/99)	9405 361 54031
3	PR 6154/04 Connexx connecting kit for four load cells (comprising: 3× PR 6155/05, 1× PR 6152/25, 1× PR 6153/99)	9405 361 54041
4	PR 6154/06 Connexx connecting kit for six load cells (comprising: 5× PR 6155/10, 1× PR 6152/25, 1× PR 6153/99)	9405 361 54061
5	PR 6154/08 Connexx connecting kit for eight load cells (comprising: 7× PR 6155/10, 1× PR 6152/25, 1× PR 6153/99)	9405 361 54081
6	PR 6155/05 Connecting cable between individual Connexx modules (M12 plug connector, male → M12 plug connector, female); 5 m	9405 361 55051
7	PR 6155/10 Connecting cable between individual Connexx modules (M12 plug connector, male → M12 plug connector, female); 10 m	9405 361 55101
8	PR 6152/10 Connecting cable between Connexx module and CANopen interface (M12 plug connector, female → D-Sub 9-pin plug connector, female); 10 m	9405 361 52101
9	PR 6152/11 Connecting cable between Connexx module and CANopen interface (M12 female → open cable ends incl. D-Sub 9-pin plug connector, female with screw connectors); 10 m	9405 361 52111
10	PR 6152/25 Connecting cable between Connexx module and CANopen interface (M12 plug connector, female → D-Sub 9-pin plug connector, female); 25 m	9405 361 52251
11	PR 6152/26 Connecting cable between Connexx module and CANopen interface (M12 plug connector, female → open cable ends incl. D-Sub 9-pin plug connector, female with screw connectors); 25 m	9405 361 52261
12	PR 6152/40 Connecting cable between Connexx module and CANopen interface (M12 plug connector, female → D-Sub 9-pin plug connector, female); 40 m	9405 361 52401
13	PR 6152/41 Connecting cable between Connexx module and CANopen interface (M12 plug connector, female → open cable ends incl. D-Sub 9-pin plug connector, female with screw connectors); 40 m	9405 361 52411
14	PR 6153/98 Split cable gland for connecting cable PR 6152/.. with D-Sub plug connector, female	9405 361 53981
15	PR 6153/ 99 Terminating resistor for Connexx module (M12 plug connector, male)	9405 361 53991

13.4 PR 6061/00S Adapter plate for Novego®

Order no. 9405 360 61002

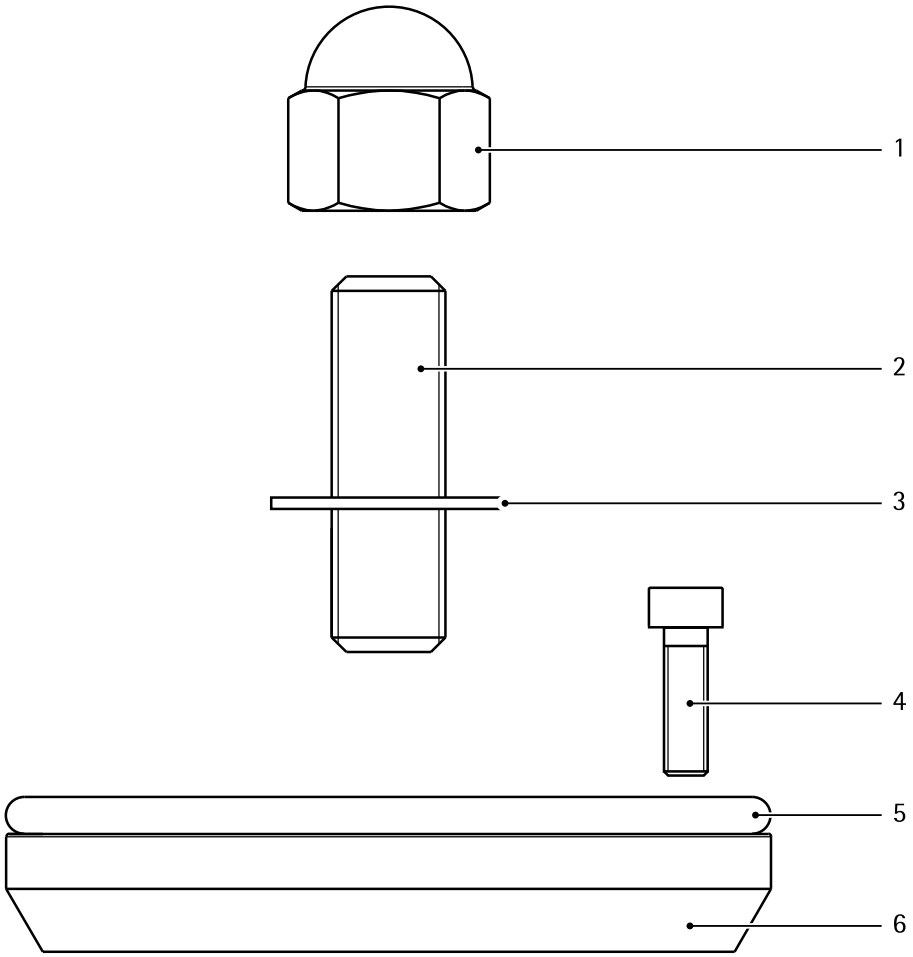

No.	Identifier
1	Cap nut M16
2	Set screw with M16×45 hexagon socket
3	Washer
4	Screw M6×24(5×)
5	O-ring
6	Adapter plate
7	Drilling template (not shown)

13.5 PR 6061/01S adapter plate with height adjustment for Novego®

Order no. 9405 360 61012

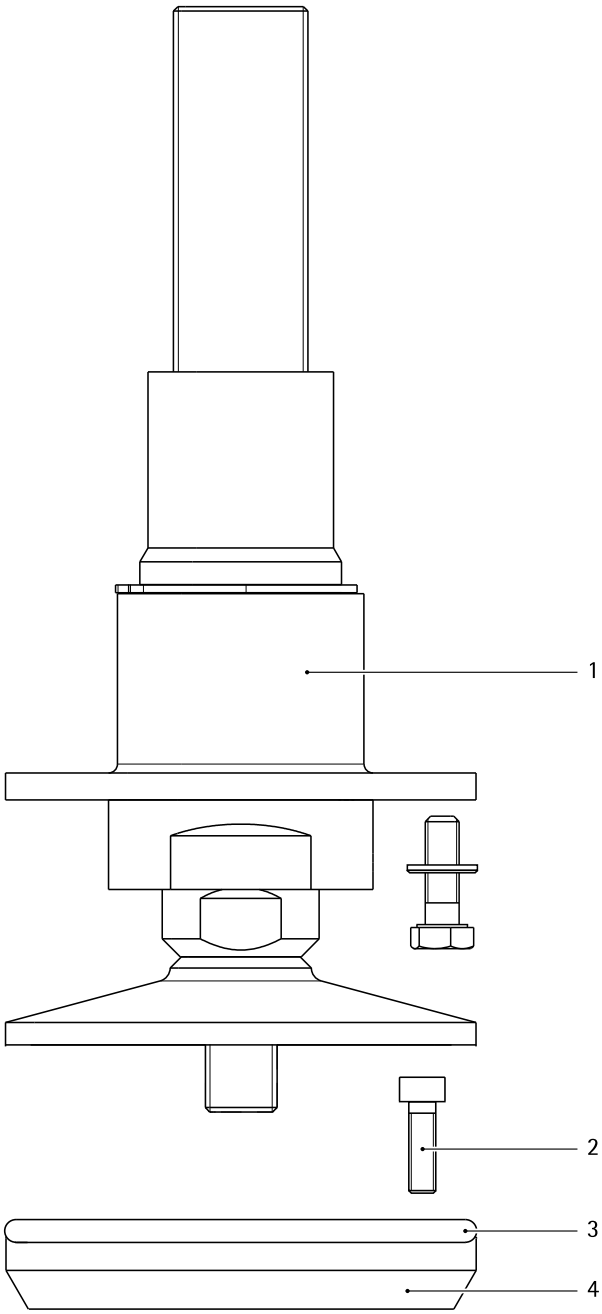

No.	Identifier
1	Height adjustable
2	Screw M6×24 (5×)
3	O-ring
4	Adapter plate
The following items are not shown:	
5	Drilling template

No.	Identifier
6	Installation overview
The following fastening material is required for mounting:	
	Washer (3×)
	Screw M8 (3×)

13.6 PR 6061/05S Set of metal sheets for Novego®

Order no. 9405 360 61052

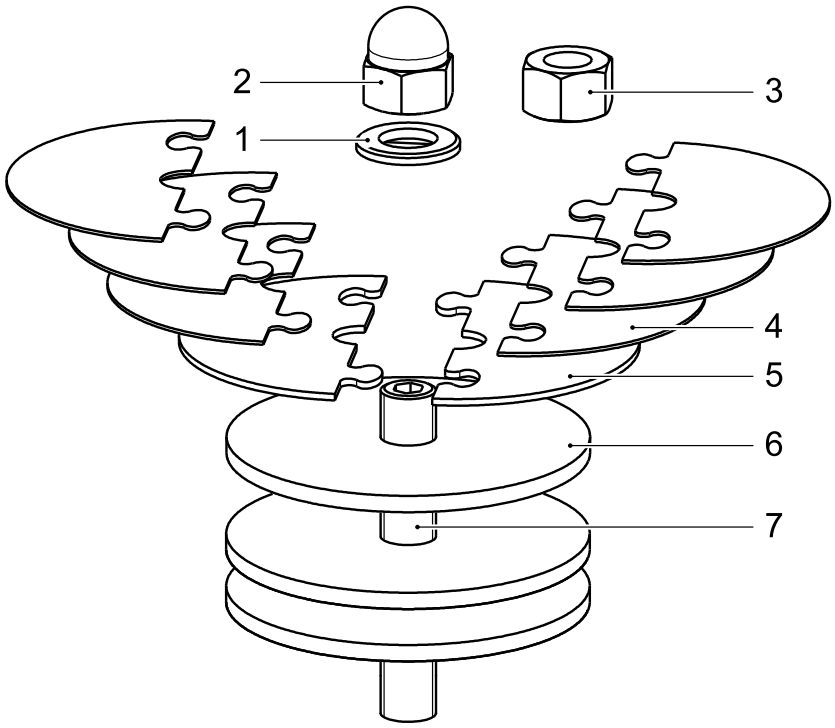

No.	Identifier
1	Washer
2	Cap nut M16
3	Nut M16
4	Balance plate 1 mm, 2-parts (3×)
5	Balance plate 2 mm, 2-parts
6	Balance plate 5 mm (3×)
7	Threaded pin M16×70 with coating
8	Additional information 9499 059 60601 (not shown)

Note:

Compliance with additional instructions 9499 059 60601 is mandatory!

13.7 PR 6061/06S Transportation and installation kit for Novego®

Order code 9405 360 61062

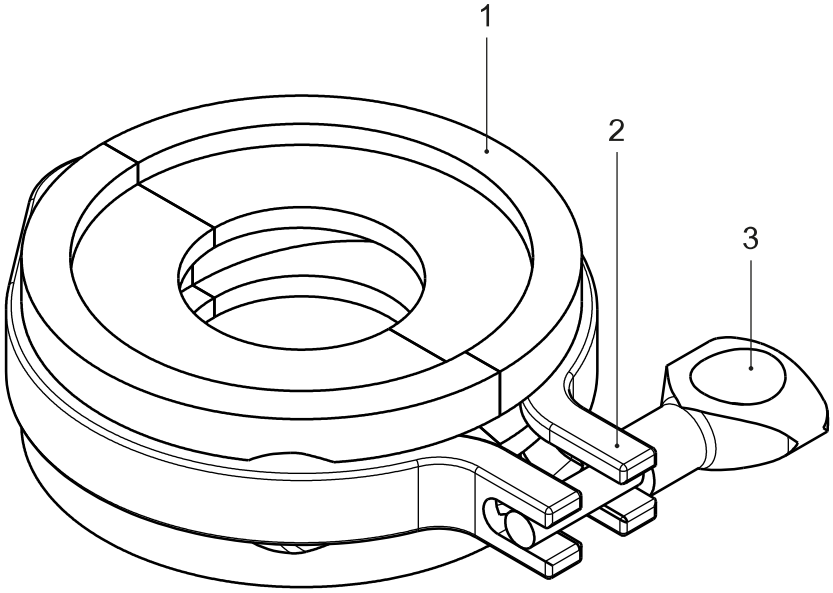

Pos.	Description
1	Half-shell set (including screws, washers, and nuts)
2	Clamping ring
3	Screw
4	Additional information 9499 059 60701 (not pictured)

Note:

Please take note of the additional information 9499 059 60701

13.8 PR 6061/07S Pivot for Novego®

Order code 9405 360 61072

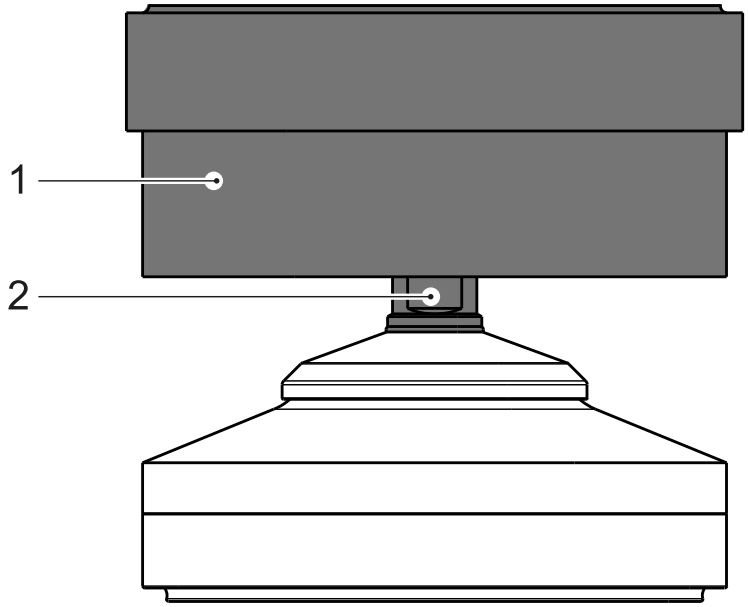

No.	Description
1	Pivot
2	Pendulum pin with O-ring
The following items are not shown:	
3	Gasket
4	O-ring
5	Additional information 9499 059 60801

Note:

Please take note of the additional information 9499 059 60801

14 Certificates/safety instructions/control drawing

Ser. no.	Description	Document no.	see Chapter
1	EC-Type Examination Certificate	BVS 16 ATEX E 005	14.1
2	Certificate of Conformity	IECEx BVS 16.0005	14.2
3	EU-Type Examination Certificate	TÜV 03 ATEX 2301X	14.3
4	Certificate of Conformity	IECEx TUN 17.0025X	14.4
5	Manufacturer's Certificate	MIN16ATEX001X	14.5
6	Certificate of Conformity FM	FM17CA0138 FM17US0276	14.6 14.7
7	Control drawing FM	4012 101 5688	14.8
8	EU-Declaration of Conformity	MEU18004	14.9
9	Certificate of Conformity TR CU 020	RU Д-DE.A301.B.05345	14.10
10	Certificate of Conformity TR CU 012	RU C-DE.МЮ62.B.05836	14.11
11	MPA	DE.C.28.001.A No. 70234	14.12
12	Parts Certificate	DE-15-PC-PTB009	14.13
13	OIML Certificate of Conformity (NMi)	R60/2000-NL1-17.41	14.14
14	Test Certificate (NMi)	TC11066	14.15
15	Certificate of Conformance (NTEP)	17-094	14.16
16	Certificate of Approval (NTEP-New York)	10032	14.17

14.1 BVS 16 ATEX E 005

(1) **EG-Baumusterprüfbescheinigung**

(2) Geräte und Schutzsysteme zur bestimmungsgemäßen Verwendung in explosionsgefährdeten Bereichen - Richtlinie 94/9/EG

(3) Nr. der EG-Baumusterprüfbescheinigung: **BVS 16 ATEX E 005**

(4) Gerät: **Wägezelle Typ PR62**/**E**

(5) Hersteller: **Sartorius Mechatronics T&H GmbH**

(6) Anschrift: **Meiendorfer Straße 205, 22145 Hamburg**

(7) Die Bauart dieses Gerätes sowie die verschiedenen zulässigen Ausführungen sind in der Anlage zu dieser Baumusterprüfbescheinigung festgelegt.

(8) Die Zertifizierungsstelle der DEKRA EXAM GmbH, benannte Stelle Nr. 0158 gemäß Artikel 9 der Richtlinie 94/9/EG des Europäischen Parlaments und des Rates vom 23. März 1994, bescheinigt, dass das Gerät die grundlegenden Sicherheits- und Gesundheitsanforderungen für die Konzeption und den Bau von Geräten und Schutzsystemen zur bestimmungsgemäßen Verwendung in explosionsgefährdeten Bereichen gemäß Anhang II der Richtlinie erfüllt. Die Ergebnisse der Prüfung sind in dem Prüfprotokoll BVS PP 16.2012 EG niedergelegt.

(9) Die grundlegenden Sicherheits- und Gesundheitsanforderungen werden erfüllt durch Übereinstimmung mit

EN 60079-0:2012 + A11:2013 Allgemeine Anforderungen
EN 60079-11:2012 Eigensicherheit „i“

(10) Falls das Zeichen „X“ hinter der Bescheinigungsnummer steht, wird in der Anlage zu dieser Bescheinigung auf besondere Bedingungen für die sichere Anwendung des Gerätes hingewiesen.

(11) Diese EG-Baumusterprüfbescheinigung bezieht sich nur auf die Konzeption und die Baumusterprüfung des beschriebenen Gerätes in Übereinstimmung mit der Richtlinie 94/9/EG.
Für Herstellung und Inverkehrbringen des Gerätes sind weitere Anforderungen der Richtlinie zu erfüllen, die nicht durch diese Bescheinigung abgedeckt sind.

(12) Die Kennzeichnung des Gerätes muss die folgenden Angaben enthalten:

Ex II 1G Ex ia IIC T6 Ga

DEKRA EXAM GmbH
Bochum, den 20.01.2016

Zertifizierungsstelle Fachbereich

Seite 1 von 2 zu BVS 16 ATEX E 005
Dieses Zertifikat darf nur vollständig und unverändert weiterverbreitet werden.

DAkkS

DEKRA EXAM GmbH, Dinnendahlstraße 9, 44809 Bochum, Deutschland
Telefon +49.234.3696-105, Telefax +49.234.3696-110, zs-exam@dekra.com

(13) Anlage zur

(14) **EG-Baumusterprüfbescheinigung**
BVS 16 ATEX E 005

(15) 15.1 Gegenstand und Typ

Wägezelle Typ PR62**/**E

Anstelle der *** werden in der vollständigen Benennung Buchstaben und Ziffern eingefügt, die unterschiedliche Typen kennzeichnen:

Wägezelle Typ PR62 * * / * * E

Unterschiedliche Ausführungen (01, 02, 11, 12, 21, 41, 46, 51, 61), die sich elektrisch und / oder mechanisch unterscheiden

Laststufe (nicht Ex-relevant, nur für Informationszwecke)

15.2 Beschreibung

Die Wägezellen dienen zur Umwandlung von Kraft in ein elektrisches Signal.
Die Zellen haben ein Metallgehäuse mit eingebauten Dehnungsmessstreifen.
Der elektrische Anschluss erfolgt über eine fest angeschlossene Leitung.
Die Zellen sind „einfache elektrische Betriebsmittel".

15.3 Kenngrößen

Spannung	Ui	DC	25	V
Strom	Ii		160	mA
Leistung	Pi		2	W
Umgebungstemperaturbereich	Ta		-30 °C bis +55 °C	

(16) Prüfprotokoll

BVS PP 16.2012 EG, Stand 20.01.2016

(17) Besondere Bedingungen für die sichere Anwendung

Keine

Dieses Zertifikat darf nur vollständig und unverändert weiterverbreitet werden.

DEKRA EXAM GmbH, Dinnendahlstraße 9, 44809 Bochum, Deutschland
Telefon +49.234.3696-105, Telefax +49.234.3696-110, zs-exam@dekra.com

Translation

(1) EC-Type Examination Certificate

(2) Equipment and protective systems intended for use in potentially explosive atmospheres - Directive 94/9/EC

(3) No. of EC-Type Examination Certificate: **BVS 16 ATEX E 005**

(4) Equipment: **Load cell type PR62**/**E**

(5) Manufacturer: **Sartorius Mechatronics T&H GmbH**

(6) Address: **Meiendorfer Straße 205, 22145 Hamburg, Germany**

(7) The design and construction of this equipment and any acceptable variation thereto are specified in the appendix to this type examination certificate.

(8) The certification body of DEKRA EXAM GmbH, notified body no. 0158 in accordance with Article 9 of the Directive 94/9/EC of the European Parliament and the Council of 23 March 1994, certifies that this equipment has been found to comply with the Essential Health and Safety Requirements relating to the design and construction of equipment and protective systems intended for use in potentially explosive atmospheres, given in Annex II to the Directive. The examination and test results are recorded in the Test and Assessment Report BVS PP 16.2012 EG.

(9) The Essential Health and Safety Requirements are assured by compliance with:

EN 60079-0:2012 + A11:2013 General requirements
EN 60079-11:2012 Intrinsic Safety "i"

(10) If the sign "X" is placed after the certificate number, it indicates that the equipment is subject to special conditions for safe use specified in the appendix to this certificate.

(11) This EC-Type Examination Certificate relates only to the design, examination and tests of the specified equipment in accordance to Directive 94/9/EC.
Further requirements of the Directive apply to the manufacturing process and supply of this equipment. These are not covered by this certificate.

(12) The marking of the equipment shall include the following:

Ex II 1G Ex ia IIC T6 Ga

DEKRA EXAM GmbH
Bochum, dated 2016-01-20

Signed: Dr. Eickhoff
Certification body

Signed: Dr. Wittler
Special services unit

DAkkS

Page 1 of 2 of BVS 16 ATEX E 005
This certificate may only be reproduced in its entirety and without any change.

DEKRA EXAM GmbH, Dinnendahlstrasse 9, 44809 Bochum, Germany,
telephone +49.234.3696-105, Fax +49.234.3696-110, zs-exam@dekra.com

(13) Appendix to

(14) **EC-Type Examination Certificate**
BVS 16 ATEX E 005

(15) 15.1 Subject and type

Load cell type PR62**/**E

Instead of the *** in the complete denomination letters and numerals will be inserted which characterize different cell types:

Load cell type PR62 [*] [*] / [*] [*] [E]

Different versions (01, 02, 11, 12, 21, 41, 46, 51, 61) which differ electrically and / or mechanically

Load level (not Ex relevant, for information purposes only)

15.2 Description

The load cells are used for converting a load into an electrical signal.
The cells have a metal enclosure with inside fixed resistance strain gauges.
The electrical connection is carried out by a permanently connected cable.
The cells are "simple apparatus".

15.3 Parameters

Voltage	Ui	DC	25	V
Current	Ii		160	mA
Power	Pi		2	W
Ambient temperature range	Ta		-30 °C up to +55 °C	

(16) Test and Assessment Report

BVS PP 16.2012 EG as of 2016-01-20

(17) Special conditions for safe use

None

We confirm the correctness of the translation from the German original.
In the case of arbitration only the German wording shall be valid and binding.

DEKRA EXAM GmbH
44809 Bochum, 2016-01-20
BVS-/Hil/Schu/Mu A 20150360

Certification body

Special services unit

Page 2 of 2 of BVS 16 ATEX E 005
This certificate may only be reproduced in its entirety and without any change.

DAkkS

DEKRA EXAM GmbH, Dinnendahlstrasse 9, 44809 Bochum, Germany,
telephone +49.234.3696-105, Fax +49.234.3696-110, zs-exam@dekra.com

14.2 IECEx BVS 16.0005

IECEx Certificate of Conformity

INTERNATIONAL ELECTROTECHNICAL COMMISSION
IEC Certification Scheme for Explosive Atmospheres
for rules and details of the IECEx Scheme visit www.iecex.com

Certificate No.:	IECEx BVS 16.0005	issue No.:1	Certificate history: Issue No. 1 (2017-7-6) Issue No. 0 (2016-1-21)
Status:	**Current**		
Date of Issue:	**2017-07-06**	Page 1 of 4	
Applicant:	**Minebea Intec GmbH** Meiendorfer Straße 205 22145 Hamburg **Germany**		
Equipment: *Optional accessory:*	**Load cell type PR 62**/**E**		
Type of Protection:	**Equipment protection by intrinsic safety "i"**		
Marking:	Ex ia IIC T6 Ga		

Approved for issue on behalf of the IECEx Certification Body: Dr. F. Eickhoff

Position: Deputy Head of Certification Body

Signature:
(for printed version)

Date: 2017-07-06

1. This certificate and schedule may only be reproduced in full.
2. This certificate is not transferable and remains the property of the issuing body.
3. The Status and authenticity of this certificate may be verified by visiting the Official IECEx Website.

Certificate issued by:

DEKRA EXAM GmbH
Dinnendahlstrasse 9
44809 Bochum
Germany

DEKRA
On the safe side.

IECEx Certificate of Conformity

Certificate No.: IECEx BVS 16.0005

Date of Issue: **2017-07-06** Issue No.: **1**

Page 2 of 4

Manufacturer: **Minebea Intec GmbH**
Meiendorfer Straße 205
22145 Hamburg
Germany

Additional Manufacturing location(s):

This certificate is issued as verification that a sample(s), representative of production, was assessed and tested and found to comply with the IEC Standard list below and that the manufacturer's quality system, relating to the Ex products covered by this certificate, was assessed and found to comply with the IECEx Quality system requirements. This certificate is granted subject to the conditions as set out in IECEx Scheme Rules, IECEx 02 and Operational Documents as amended.

STANDARDS:
The electrical apparatus and any acceptable variations to it specified in the schedule of this certificate and the identified documents, was found to comply with the following standards:

IEC 60079-0 : 2011 Edition: 6.0	Explosive atmospheres - Part 0: General requirements
IEC 60079-11 : 2011 Edition: 6.0	Explosive atmospheres - Part 11: Equipment protection by intrinsic safety "i"

*This Certificate **does not** indicate compliance with electrical safety and performance requirements other than those expressly included in the Standards listed above.*

TEST & ASSESSMENT REPORTS:
A sample(s) of the equipment listed has successfully met the examination and test requirements as recorded in

Test Report:
DE/BVS/ExTR16.0007/00

Quality Assessment Report:

DE/PTB/QAR13.0007/02

IECEx Certificate of Conformity

Certificate No.: IECEx BVS 16.0005

Date of Issue: **2017-07-06** Issue No.: **1**

Page 3 of 4

Schedule

EQUIPMENT:
Equipment and systems covered by this certificate are as follows:

General product information:

The load cells are used for converting a load into an electrical signal.
The cells have a metal enclosure with inside fixed resistance strain gauges.
The electrical connection is carried out by a permanently connected cable.
The cells are "simple apparatus".

Technical parameters

Voltage	Ui	DC	25 V
Current	Ii		160 mA
Power	Pi		2 W
Ambient temperature range	Ta		-30 °C up to +55 °C

Type Designation

See Annex

SPECIFIC CONDITIONS OF USE: NO

IECEx Certificate of Conformity

Certificate No.: IECEx BVS 16.0005

Date of Issue: **2017-07-06** Issue No.: **1**

Page 4 of 4

DETAILS OF CERTIFICATE CHANGES (for issues 1 and above):

The reason for this new issue is the change of the company's name from Sartorius Mechatronics T&H GmbH to Minebea Intec GmbH. Therefore the appropriate QAR was linked to this certificate.

Annex: BVS_16_0005_Minebea_Annex_issue1.pdf

14.3 TÜV 03 ATEX 2301X

(1) **EU-Baumusterprüfbescheinigung**

(2) Geräte und Schutzsysteme zur bestimmungsgemäßen Verwendung in explosionsgefährdeten Bereichen, **Richtlinie 2014/34/EU**

(3) **Bescheinigungsnummer:** **TÜV 03 ATEX 2301 X** **Ausgabe:** 00

(4) für das Produkt: Wägezellen Typ PR 62.../.. und MP76/...

(5) des Herstellers: Minebea Intec GmbH
(6) Anschrift: Meiendorfer Str. 205 A, 22145 Hamburg

Auftragsnummer: 8000475687

Ausstellungsdatum: 14.11.2017

(7) Die Bauart dieses Produktes sowie die verschiedenen zulässigen Ausführungen sind in der Anlage und den darin aufgeführten Unterlagen zu dieser EU-Baumusterprüfbescheinigung festgelegt.

(8) Die TÜV NORD CERT GmbH bescheinigt als notifizierte Stelle Nr. 0044 nach Artikel 17 der Richtlinie 2014/34/EU des Europäischen Parlaments und des Rates vom 26. Februar 2014 die Erfüllung der wesentlichen Gesundheits- und Sicherheitsanforderungen für die Konzeption und den Bau dieses Produktes zur bestimmungsgemäßen Verwendung in explosionsgefährdeten Bereichen gemäß Anhang II der Richtlinie.
Die Ergebnisse der Prüfung sind in dem vertraulichen ATEX Prüfungsbericht Nr. 17 203 206448 festgelegt.

9) Die wesentlichen Gesundheits- und Sicherheitsanforderungen werden erfüllt durch Übereinstimmung mit:
EN 60079-0:2012+A11:2013 EN 60079-31:2014
ausgenommen die unter Abschnitt 18 der Anlage gelisteten Anforderungen.

(10) Falls das Zeichen "X" hinter der Bescheinigungsnummer steht, wird auf die Besonderen Bedingungen für die Verwendung des Produktes in der Anlage zu dieser Bescheinigung hingewiesen.

(11) Diese EU-Baumusterprüfbescheinigung bezieht sich nur auf Konzeption und Prüfung des festgelegten Produktes. Weitere Anforderungen dieser Richtlinie gelten für die Herstellung und das Bereitstellen dieses Produktes. Diese Anforderungen werden nicht durch diese Bescheinigung abgedeckt.

(12) Die Kennzeichnung des Produktes muss die folgenden Angaben enthalten:

Ex II 1 D Ex ta IIIC T160 °C Da

TÜV NORD CERT GmbH, Langemarckstraße 20, 45141 Essen, notifiziert durch die Zentralstelle der Länder für Sicherheitstechnik (ZLS), Ident. Nr. 0044, Rechtsnachfolger der TÜV NORD CERT GmbH & Co. KG Ident. Nr. 0032

Der Leiter der notifizierten Stelle

Meyer

Geschäftsstelle Hannover, Am TÜV 1, 30519 Hannover, Tel. +49 511 998-61455, Fax +49 511 998-61590

Diese Bescheinigung darf nur unverändert weiterverbreitet werden.
Auszüge oder Änderungen bedürfen der Genehmigung der TÜV NORD CERT GmbH

P17-F-001 Rev. 01/014.16 Seite 1/3

(13) **A N L A G E**

(14) **EU-Baumusterprüfbescheinigung Nr. TÜV 03 ATEX 2301 X Ausgabe 00**

(15) Beschreibung des Produktes

Die Wägezellen Typen PR62../... und MP76/... gemäß der unten aufgeführten Tabelle dienen zur Messung von Kräften mittels einer DMS Brücke mit Kompensations- und Abgleichwiderständen. Die Gehäuse der Wägezellen sowie die eingesetzten Membranen bestehen aus Edelstahl. Alle Gehäuseteile und die Membranen sind gasdicht verschweißt.
Die Wägezellen dürfen in durch Staub explosionsgefährdeten Bereichen für EPL Da-Betriebsmittel bzw. EPL Db-Betriebsmittel installiert werden.

Der zulässige Umgebungstemperaturbereich beträgt -20 °C ... 55°C.

Auflistung der Typen und Gehäuseformen

Typen	Gehäuseform
PR 6201/...	Zylinder
PR 6202/...	Zylinder
PR 6203/...	Zylinder
PR 6221/...	Zylinder
PR 6211/...	Kreisplatte
PR 6212/...	Kreisplatte
PR 6251/...	Kreisplatte
PR 6261/...	Kreisplatte
PR 6241/...	S-Form
PR 6246/...	S-Form
MP 76/...	S-Form

Elektrische Daten

Versorgungs- und Signalstromkreis ..... (fest angeschlossenes Kabel)

nur zum Anschluss an einen bescheinigten eigensicheren Stromkreis

Höchstwert:
P_i = 2 W
Die wirksame innere Induktivität und Kapazität sind vernachlässigbar klein.
Verwendung als EPL Da-Betriebsmittel
Schutzniveau des Stromkreises: ia
Verwendung als EPL Db-Betriebsmittel
Schutzniveau des Stromkreises: ia oder ib

(16) Zeichnungen und Dokumente sind im ATEX Prüfungsbericht Nr. 17 203 206448 aufgelistet.

Seite 2/3

Anlage zur EU-Baumusterprüfbescheinigung Nr. TÜV 03 ATEX 2103 X Ausgabe 00

(17) Besondere Bedingungen für die Verwendung

1. Die freien Leitungsenden der Anschlüsse sind außerhalb des explosionsgefährdeten Bereiches oder in einem geeigneten, für den Einsatz in durch Staub explosionsgefährdeten Bereichen bescheinigten Klemmenkasten zu verdrahten.

2. Der Anschluss von nichteigensicheren Stromkreisen
- mit einer sicheren Begrenzung der verfügbaren Leistung auf 2W und
- einer sicheren galvanischen Trennung vom Erdpotential (für Wägezellen ohne zusätzlichen Erdanschluss erforderlich)

an die Wägezellen mit EPL Db ist zulässig.

3. Die Wägezellen sind so zu errichten, dass die Gehäuse sicher mit Erdpotential verbunden sind (z. B. über die Erdungsklemme; die Betriebsanleitung des Herstellers ist zu beachten).

(18) Wesentliche Gesundheits- und Sicherheitsanforderungen

keine zusätzlichen

- Ende der Bescheinigung -

Seite 3/3

Translation

(1) **EU-Type Examination Certificate**

(2) Equipment and protective systems intended for use in potentially explosive atmospheres, **Directive 2014/34/EU**

(3) **Certificate Number** **TÜV 03 ATEX 2301 X** **issue:** 00

(4) for the product: Load cell type PR 62../... and MP76/...

(5) of the manufacturer: Minebea Intec GmbH

(6) Address: Meiendorfer Str. 205 A, 22145 Hamburg

Order number: 8000475687

Date of issue: 2017-11-14

(7) The design of this product and any acceptable variation thereto are specified in the schedule to this EU-Type Examination Certificate and the documents therein referred to.

(8) The TÜV NORD CERT GmbH, Notified Body No. 0044, in accordance with Article 17 of the Directive 2014/34/EU of the European Parliament and the Council of 26 February 2014, certifies that this product has been found to comply with the Essential Health and Safety Requirements relating to the design and construction of products intended for use in potentially explosive atmospheres given in Annex II to the Directive.
The examination and test results are recorded in the confidential ATEX Assessment Report No. 17 203 206448.

(9) Compliance with the Essential Health and Safety Requirements has been assured by compliance with:
EN 60079-0:2012+A11:2013 EN 60079-31:2012
except in respect of those requirements listed at item 18 of the schedule.

(10) If the sign "X" is placed after the certificate number, it indicates that the product is subject to the Specific Conditions for Use specified in the schedule to this certificate.

11) This EU-Type Examination Certificate relates only to the design, and construction of the specified product. Further requirements of the Directive apply to the manufacturing process and supply of this equipment. These are not covered by this certificate.

(12) The marking of the product shall include the following:

Ex II 1 D Ex ta IIIC T160 °C Da

TÜV NORD CERT GmbH, Langemarckstraße 20, 45141 Essen, notified by the central office of the countries for safety engineering (ZLS), Ident. Nr. 0044, legal successor of the TÜV NORD CERT GmbH & Co. KG Ident. Nr. 0032

The head of the notified body

Meyer

Hanover office, Am TÜV 1, 30519 Hannover, Tel. +49 511 998-61455, Fax +49 511 998-61590

This certificate may only be reproduced without any change, schedule included.
Excerpts or changes shall be allowed by the TÜV NORD CERT GmbH

P17-F-011 Rev. 01/04.16 page 1/3

(13) **S C H E D U L E**

(14) **EU-Type Examination Certificate No. TÜV 03 ATEX 2301 X issue 00**

(15) Description of product

The load cells type PR62../... and MP76/... according to the table mentioned below are used for measuring forces by means of a strain gauge with resistors for compensation and adjustment.
The housings of the load cells as well as the used membranes consist of stainless steel. All parts of the housing and the membranes are welded gas-tight.
The load cells are allowed to be installed in explosion hazardous areas caused by dust for EPL Da apparatus resp. for EPL Db apparatus.
The permissible ambient temperature range is -20 °C ... 55 °C.

Listing of types and shape of housings

Types	Shape of housing
PR 6201/...	Cylinder
PR 6202/...	Cylinder
PR 6203/...	Cylinder
PR 6221/...	Cylinder
PR 6211/...	Circle plate
PR 6212/...	Circle plate
PR 6251/...	Circle plate
PR 6261/...	Circle plate
PR 6241/...	S-shape
PR 6246/...	S-shape
MP 76/...	S-shape

Supply- and signal circuit ..... (Cable connected fixed)

only for connection to a certified intrinsically safe circuit

Maximum value:
P_i = 2 W
The effective internal inductance and capacitance are negligibly small.
Use as EPL Da apparatus
Level of protection of the circuit: ia
Use as EPL Db apparatus
Level of protection of the circuit: ia or ib

(16) Drawings and documents are listed in the ATEX Assessment Report No. 17 203 206448

page 2/3

Schedule to EU-Type Examination Certificate No. TÜV 03 ATEX 2301 X issue 00

(17) Specific Conditions for Use

1. The free cable ends of the connections have to be wired outside of the explosion hazardous area or in a suitable terminal box, suitably certified for the application in explosion hazardous areas caused by dust.

2. The connection of non-intrinsically safe circuits
- with a safe limitation of the available power of 2 W and
- a safe galvanic separation from earth potential (necessary for load cells without an additional earth connection)
to the load cells of EPL Db is permissible.

3. The load cells have to be installed in such a way, that the housings are safely connected with earth potential (e. g. via the earth terminal; observe manual of the manufacturer).

(18) Essential Health and Safety Requirements
no additional ones

- End of Certificate -

page 3/3

14.4 IECEx TUN 17.0025X

IECEx Certificate of Conformity

INTERNATIONAL ELECTROTECHNICAL COMMISSION
IEC Certification Scheme for Explosive Atmospheres
for rules and details of the IECEx Scheme visit www.iecex.com

Certificate No.:	IECEx TUN 17.0025X issue No.:0	Certificate history:
Status:	**Current**	
Date of Issue:	**2017-11-14**	Page 1 of 3
Applicant:	**Minebea Intec GmbH** Meiendorfer Str. 205 22145 Hamburg **Germany**	
Equipment: *Optional accessory:*	**Weighing cells type PR 62.. /... and MP76/...**	
Type of Protection:	**Equipment dust ignition protection by enclosure "t"**	
Marking:	Ex ta IIIC T160°C Da	

Approved for issue on behalf of the IECEx Certification Body: Andreas Meyer

Position: Head of IECEx Certification Body

Signature:
(for printed version)

Date: 2017-11-14

1. This certificate and schedule may only be reproduced in full.
2. This certificate is not transferable and remains the property of the issuing body.
3. The Status and authenticity of this certificate may be verified by visiting the Official IECEx Website.

Certificate issued by:

TÜV NORD CERT GmbH
Hanover Office
Am TÜV 1, 30519 Hannover
Germany

IECEx Certificate of Conformity

Certificate No.: IECEx TUN 17.0025X

Date of Issue: **2017-11-14** Issue No.: **0**

Page 2 of 3

Manufacturer: **Minebea Intec GmbH**
Meiendorfer Str. 205
22145 Hamburg
Germany

Additional Manufacturing location(s):

This certificate is issued as verification that a sample(s), representative of production, was assessed and tested and found to comply with the IEC Standard list below and that the manufacturer's quality system, relating to the Ex products covered by this certificate, was assessed and found to comply with the IECEx Quality system requirements. This certificate is granted subject to the conditions as set out in IECEx Scheme Rules, IECEx 02 and Operational Documents as amended.

STANDARDS:
The electrical apparatus and any acceptable variations to it specified in the schedule of this certificate and the identified documents, was found to comply with the following standards:

IEC 60079-0 : 2011 Edition: 6.0	Explosive atmospheres - Part 0: General requirements
IEC 60079-31 : 2013 Edition: 2	Explosive atmospheres - Part 31: Equipment dust ignition protection by enclosure "t"

*This Certificate **does not** indicate compliance with electrical safety and performance requirements other than those expressly included in the Standards listed above.*

TEST & ASSESSMENT REPORTS:
A sample(s) of the equipment listed has successfully met the examination and test requirements as recorded in

Test Report:
DE/TUN/ExTR17.0023/00

Quality Assessment Report:

DE/PTB/QAR13.0007/02

IECEx Certificate of Conformity

Certificate No.: IECEx TUN 17.0025X

Date of Issue: **2017-11-14** Issue No.: **0**

Page 3 of 3

Schedule

EQUIPMENT:
Equipment and systems covered by this certificate are as follows:

The load cells type PR62../... and MP76/... according to the table mentioned below are used for measuring forces by means of a strain gauge with resistors for compensation and adjustment.
The housings of the load cells as well as the used membranes consist of stainless steel. All parts of the housing and the membranes are welded gas-tight.
The load cells are allowed to be installed in explosion hazardous areas caused by dust for EPL Da apparatus resp. for EPL Db apparatus.
The permissible ambient temperature range is -20 °C ... +55 °C.

See attachment for further details.

SPECIFIC CONDITIONS OF USE: YES as shown below:

1.The free cable ends of the connections have to be wired outside of the explosion hazardous area or in a suitable terminal box, certified for the application in explosion hazardous areas caused by dust.

2.The connection of non intrinsically safe circuits
- with a safe limitation of the available power of 2W and
- a safe galvanic separation from earth potential (necessary for load cells without an additional earth connection)
to the load cells of the category 2 is permissible.

3.The load cells have to be installed in such a way, that the housings are connected with earth potential.

Annex: _Attachment_load cells TUN 17.0025 X (2).pdf

TÜV NORD CERT GmbH
Hanover Office
Am TÜV 1
30519 Hannover
Germany

Page 1 of 1
Attachment to IECEx TUN 17.0025 X issue 00

The load cells type PR62../... and MP76/... according to the table mentioned below are used for measuring forces by means of a strain gauge with resistors for compensation and adjustment. The housings of the load cells as well as the used membranes consist of stainless steel. All parts of the housing and the membranes are welded gas-tight.
The load cells are allowed to be installed in explosion hazardous areas caused by dust for category 1 apparatus resp. for category 2 apparatus.
The permissible ambient temperature range is -20 °C ... 55 °C.

Listing of types and shape of housings

Types	Shape of housing
PR 6201/...	Cylinder
PR 6202/...	Cylinder
PR 6203/...	Cylinder
PR 6221/...	Cylinder
PR 6211/...	Circle plate
PR 6212/...	Circle plate
PR 6251/...	Circle plate
PR 6261/...	Circle plate
PR 6241/...	S-shape
PR 6246/...	S-shape
MP 76/...	S-shape

Supply- and signal circuit ..... (Cable connected fixed)

only for connection to a certified intrinsically safe circuit
Maximum value:
P_i = 2 W
The effective internal inductance and capacitance are negligibly small.
Use as category 1 apparatus
Level of protection of the circuit: ia
Use as category 2 apparatus
Level of protection of the circuit: ia or ib

Specific Conditions of Use

1.The free cable ends of the connections have to be wired outside of the explosion hazardous area or in a suitable terminal box, suitably certified for the application in explosion hazardous areas caused by dust.

2.The connection of non intrinsically safe circuits
- with a safe limitation of the available power of 2 W and
- a safe galvanic separation from earth potential (necessary for load cells without an additional earth connection)
to the load cells of the category 2 is permissible.

3.The load cells have to be installed in such a way, that the housings are safely connected with earth potential (e. g. via the earth terminal; observe manual of the manufacturer).

14.5 MIN16ATEX001X

Herstellerbescheinigung
Manufacturer's certificate

Minebea Intec

Nummer *Number*	MIN16ATEX001X
Hersteller *Manufacturer*	Minebea Intec GmbH Meiendorfer Straße 205A 22145 Hamburg, Germany

erklärt in alleiniger Verantwortung, dass das Produkt
declares under sole responsibility that the product

Geräteart *Device type*	Wägezelle *Load cell*
Baureihe *Type series*	PR 6201, PR 6202, PR 6203, PR 6207, PR 6211 D1(500kg-10t), PR 6212, PR 6221, PR 6241, PR 6246, PR 6251, PR 6261, MP 76 | (ohne Typ / without type LA or LT)

auf das sich diese Bescheinigung bezieht, mit der/den folgenden Norm(en) oder normativen Dokument(en) übereinstimmt (siehe Seite 2) gemäß den Bestimmungen der „Richtlinie 2014/34/EU des Europäischen Parlaments und des Rates vom 26. Februar 2014 zur Harmonisierung der Rechtsvorschriften der Mitgliedstaaten für Geräte und Schutzsysteme zur bestimmungsgemäßen Verwendung in explosionsgefährdeten Bereichen". Das Produkt wird wie folgt gekennzeichnet:
to which this certification relates is in conformity with the following standard(s) or other normative document(s) (see page 2) pursuant to the provisions of the "Directive 2014/34/EU of the European Parliament and of the Council of 26 February 2014 on the harmonisation of the laws of the Member States relating to equipment and protective systems intended for use in potentially explosive atmospheres ". This product is labelled as follows:

Kennzeichnung *Marking*	II 3G Ex nA IIC T6 Gc II 3D Ex tc IIIC T85°C Dc MIN16ATEX001X

Minebea Intec GmbH
Hamburg, 09.03.2020

W.D. Schulze
Managing Director

Torben Hiller
EX Approval Manager

Diese Erklärung bescheinigt die Übereinstimmung mit den genannten EU-Richtlinien, ist jedoch keine Zusicherung von Eigenschaften. Bei einer mit uns nicht abgestimmten Änderung des Produktes verliert diese Erklärung ihre Gültigkeit. Die Sicherheitshinweise der zugehörigen Produktdokumentation sind zu beachten.
This declaration certifies conformity with the above mentioned EC Directives, but does not guarantee product attributes. Unauthorized product modifications make this declaration invalid. The safety information in the associated product documentation must be observed.

1/2
MIN16ATEX001X Rev. 3

Herstellerbescheinigung
Manufacturer's certificate

Minebea intec

Die grundlegenden Sicherheits- und Gesundheitsanforderungen werden erfüllt durch Übereinstimmung mit:
Compliance with the Essential Health and Safety Requirements has been assured by compliance with:

Normen *Standards*	EN 60079-0:2012 + A11:2013 Explosionsgefährdete Bereiche – Teil 0: Geräte - Allgemeine Anforderungen *Explosive atmospheres – Part 0: Equipment - General requirements* EN 60079-15:2010 Explosionsfähige Atmosphäre – Teil 15: Geräteschutz durch Zündschutzart „n" *Explosive atmospheres – Part 15: Equipment protection by type of protection „n"* EN 60079-31:2014 Explosionsfähige Atmosphäre – Teil 31: Geräte-Staubexplosionsschutz durch Gehäuse „t" *Explosive atmospheres – Part 31: Equipment dust ignition protection by enclosure „t"*
	Diese Bescheinigung wurde auf Basis des folgenden Prüfberichts erstellt: *This certificate was drawn on the basis of the following test report:*
Prüfbericht *Test Report*	MTR0001 Minebea Intec GmbH, Hamburg, Germany
Sicherheitshinweise *Safety instructions*	949905947901
Umgebungstemperatur Ambient temperature	-30°C ... +55°C
IP-Schutz *IP protection*	IP6X
	Für diese Produkt gelten folgende besonderen Bedingungen für den sicheren Gebrauch: *For this product the following special conditions for safe use apply:*
besondere Bedingungen *special Conditions*	Für Anwendungen in Umgebungen mit brennbaren Stäuben ist eine elektrostatische Aufladung zu vermeiden. *For application in environments with combustible dust, electrostatic charging shall be avoided.* Bei Verwendung der Zündschutzart "Ex nA" ist eine Transientenschutzeinrichtung vorzusehen welche einen Maximalwert von 140% des Spitzenspannungswertes von 85V sicherstellt. *When applied in type of protection non sparking "Ex nA", a transient protection device shall be set at a level not exceeding 140% of the peak rated voltage value of 85 V.*

2/2
MIN16ATEX001X Rev. 3

14.6 FM17CA0138

CERTIFICATE OF CONFORMITY

FM Approvals

1. HAZARDOUS LOCATION ELECTRICAL EQUIPMENT PER CANADIAN REQUIREMENTS
2. Certificate No: FM17CA0138
3. Equipment: (Type Reference and Name) Model PR 6201, PR 6202, PR 6203, PR 6211, PR 6212, PR 6221, PR 6241, PR 6246, PR 6251, PR 6261 Load Cells
4. Name of Listing Company: Minebea Intec GmbH
5. Address of Listing Company: Meiendorfer Str. 205A
   22145 Hamburg
   Germany
6. The examination and test results are recorded in confidential report number:

   3053046 dated 22nd July 2014
7. FM Approvals LLC, certifies that the equipment described has been found to comply with the following Approval standards and other documents:

   CAN/CSA-C22.2 No. 213: 2013, CAN-C22.2 No. 157-92: 2012,
   CSA-C22.2 No. 1010.1: 2004, CAN/CSA-C22.2 No. 25: 2009
8. If the sign 'X' is placed after the certificate number, it indicates that the equipment is subject to specific conditions of use specified in the schedule to this certificate.
9. This certificate relates to the design, examination and testing of the products specified herein. The FM Approvals surveillance audit program has further determined that the manufacturing processes and quality control procedures in place are satisfactory to manufacture the product as examined, tested and Approved.
10. Equipment Ratings:

    Intrinsically safe (Entity) for use in Class I,II and III Division 1, Groups A, B, C, D, E, F and G indoor and outdoor Hazardous Locations, Temperature Class T4A Ta= -40°C to +70°C and T5 Ta= -40°C to +55°C when installed per Control Drawing 4012 101 5688.
    Nonincendive (NIFW) for use in Class I, Division 2, Groups A, B, C, and D indoor and outdoor Hazardous Locations, Temperature Class T4A Ta= -40°C to +70°C and T5 Ta= -40°C to +55°C when installed per Control Drawing 4012 101 5688.

Certificate issued by:

J. E. Marquedant
J. E. Marquedant
VP, Manager - Electrical Systems

30 July 2020
Date

To verify the availability of the Approved product, please refer to www.approvalguide.com

THIS CERTIFICATE MAY ONLY BE REPRODUCED IN ITS ENTIRETY AND WITHOUT CHANGE

FM Approvals LLC. 1151 Boston-Providence Turnpike, Norwood, MA 02062 USA
T: +1 (1) 781 762 4300 F: +1 (1) 781 762 9375 E-mail: information@fmapprovals.com www.fmapprovals.com

F 349 (Mar 16) Page 1 of 3

SCHEDULE

Canadian Certificate Of Conformity No: FM17CA0138

Dust Ignition protected for Class II, III Division 2, Groups E, F and G indoor and outdoor Hazardous Locations, Temperature Class T4A Ta= -40°C to +70°C and T5 Ta= -40°C to +55°C when installed per Control Drawing 4012 101 5688

11. The marking of the equipment shall include:

IS CL I, II, III, DIV 1, GP A,B,C,D,E,F,G Entity - 4012 101 5688
NI CL I, II, III, DIV 2, GP A,B,C,D, E, F, G - 4012 101 5688; NIFW
T4A Ta= -40°C to 70°C; T5 Ta= -40°C to 55°C

12. **Description of Equipment:**

General - The Model PR 62xx Series Load Cells are precision compression load cells designed to meet the specific requirements of a wide range of weighing installations.

Construction - The Model PR 62xx Series Load Cells are contructed of welded stainless steel, hermetically sealed, and filled with inert gas.

Ratings - The Model PR 62xx Series Load Cells are rated for an operating temperature range of -40°C to 70°C. Entity and Nonincendive Field Wiring parameters are as defined below.

PR 62a/bc d e. Load Cell.

Entity/Nonincendive Field Wiring Parameters:
Ui = 25 V, Ii = 160 mA, Pi = 2 W; Ci= 0 µF, Li= 0 mH.

a = 01, 02, 03, 11, 12, 21, 41, 46, 51, 61
b = up to three numbers denoting the maximum capacity (may be separated by a dot)
c = Unit of measurement: blank or t
d = Accuracy: up to three numbers or letters (may be separated by dots)
e = Special: F or blank

13. **Specific Conditions of Use:**

None

14. **Test and Assessment Procedure and Conditions:**

This Certificate has been issued in accordance with FM Approvals Canadian Certification Scheme.

15. **Schedule Drawings**

A copy of the technical documentation has been kept by FM Approvals.

16. **Certificate History**

Details of the supplements to this certificate are described below:

THIS CERTIFICATE MAY ONLY BE REPRODUCED IN ITS ENTIRETY AND WITHOUT CHANGE

FM Approvals LLC. 1151 Boston-Providence Turnpike, Norwood, MA 02062 USA
T: +1 (1) 781 762 4300 F: +1 (1) 781 762 9375 E-mail: information@fmapprovals.com www.fmapprovals.com

SCHEDULE

Canadian Certificate Of Conformity No: FM17CA0138

Date	Description
22nd July 2014	Original Issue.
6th October 2017	Supplement 3: Report Reference: – RR210028 dated 6th October 2017. Description of the Change: Company name change from Sartorius Mechatronics T&H GmbH. Certificate reformated.
10th November 2017	Supplement 4: Report Reference: – RR211742 dated 10th November 2017. Description of the Change: Addition of option a = 03.
24th October 2018	Supplement 5: Report Reference: – RR215447 dated 24th October 2018 . Description of the Change: Update lower operating temperatures from -30°C to -40°C.
30th July 2020	Supplement 6: Report Reference: – RR224030 dated 30th July 2020. Description of the Change: Added load cell variation PR 6261.

THIS CERTIFICATE MAY ONLY BE REPRODUCED IN ITS ENTIRETY AND WITHOUT CHANGE

FM Approvals LLC. 1151 Boston-Providence Turnpike, Norwood, MA 02062 USA
T: +1 (1) 781 762 4300 F: +1 (1) 781 762 9375 E-mail: information@fmapprovals.com www.fmapprovals.com

F 348 (Mar 16) Page 3 of 3

14.7 FM17US0276

CERTIFICATE OF CONFORMITY

FM Approvals

1. HAZARDOUS (CLASSIFIED) LOCATION ELECTRICAL EQUIPMENT PER US REQUIREMENTS
2. Certificate No: FM17US0276
3. Equipment: (Type Reference and Name) Model PR 6201, PR 6202, PR 6203, PR 6211, PR 6212, PR 6221, PR 6241, PR 6246, PR 6251, PR 6261 Load Cells
4. Name of Listing Company: Minebea Intec GmbH
5. Address of Listing Company: Meiendorfer Str. 205A
   22145 Hamburg
   Germany
6. The examination and test results are recorded in confidential report number:

   3001200 dated 12th August 1999
7. FM Approvals LLC, certifies that the equipment described has been found to comply with the following Approval standards and other documents:

   FM Class 3600:2018, FM Class 3610:2010, FM Class 3611:2004, FM Class 3810:2005
8. If the sign 'X' is placed after the certificate number, it indicates that the equipment is subject to specific conditions of use specified in the schedule to this certificate.
9. This certificate relates to the design, examination and testing of the products specified herein. The FM Approvals surveillance audit program has further determined that the manufacturing processes and quality control procedures in place are satisfactory to manufacture the product as examined, tested and Approved.
10. Equipment Ratings:

    Intrinsically safe (Entity) for use in Class I, II and III Division 1, Groups A, B, C, D, E, F and G indoor and outdoor Hazardous (Classified) Locations, Temperature Class T4A Ta= -40°C to +70°C and T5 Ta= -40°C to +55°C when installed per Control Drawing 4012 101 5688.
    Nonincendive (NIFW) for use in Class I, II and III Division 2, Groups A, B, C, D, E, F and G indoor and outdoor Hazardous (Classified) Locations, Temperature Class T4A Ta= -40°C to +70°C and T5 Ta= -40°C to +55°C when installed per Control Drawing 4012 101 5688.

Certificate issued by:

J.E. Marquedant
VP, Manager - Electrical Systems

30 July 2020
Date

To verify the availability of the Approved product, please refer to www.approvalguide.com

THIS CERTIFICATE MAY ONLY BE REPRODUCED IN ITS ENTIRETY AND WITHOUT CHANGE

FM Approvals LLC, 1151 Boston-Providence Turnpike, Norwood, MA 02062 USA
T: +1 (1) 781 762 4300 F: +1 (1) 781 762 9375 E-mail: information@fmapprovals.com www.fmapprovals.com

F 347 (Mar 16) Page 1 of 3

SCHEDULE

US Certificate Of Conformity No: FM17US0276

11. The marking of the equipment shall include:

IS CL I, II, III, DIV 1, GP A,B,C,D,E,F,G Entity - 4012 101 5688
NI CL I, II, III, DIV 2, GP A,B,C,D,E,F,G - 4012 101 5688; NIFW
T4A Ta= -40°C to 70°C; T5 Ta= -40°C to 55°C

12. **Description of Equipment:**

General - The Model PR 62xx Series Load Cells are precision compression load cells designed to meet the specific requirements of a wide range of weighing installations.

Construction - The Model PR 62xx Series Load Cells are contructed of welded stainless steel, hermetically sealed, and filled with inert gas.

Ratings - The Model PR 62xx Series Load Cells are rated for an operating temperature range of -40°C to 70°C. Entity and Nonincendive Field Wiring parameters are as defined below.

PR 62a/bc d e. Load Cell.

Entity/Nonincendive Field Wiring Parameters:
Ui = 25 V, Ii = 160 mA, Pi = 2 W; Ci= 0 µF, Li= 0 mH.

a = 01, 02, 03, 11, 12, 21, 41, 46, 51, 61
b = up to three numbers denoting the maximum capacity (may be separated by a dot)
c = Unit of measurement: blank or t
d = Accuracy: up to three numbers or letters (may be separated by dots)
e = Special: F or blank

13. **Specific Conditions of Use:**

None

14. **Test and Assessment Procedure and Conditions:**

This Certificate has been issued in accordance with FM Approvals US Certification Requirements.

15. **Schedule Drawings**

A copy of the technical documentation has been kept by FM Approvals.

THIS CERTIFICATE MAY ONLY BE REPRODUCED IN ITS ENTIRETY AND WITHOUT CHANGE

FM Approvals LLC. 1151 Boston-Providence Turnpike, Norwood, MA 02062 USA
T: +1 (1) 781 762 4300 F: +1 (1) 781 762 9375 E-mail: information@fmapprovals.com www.fmapprovals.com

SCHEDULE

FM Approvals

Member of the FM Global Group

US Certificate Of Conformity No: FM17US0276

16. **Certificate History**

Details of the supplements to this certificate are described below:

Date	Description
12th August 1999	Original Issue.
6th October 2017	Supplement 7: Report Reference: – RR210028 dated 6th October 2017. Description of the Change: Company name change from Sartorius Mechatronics T&H GmbH. Certificate reformated.
10th November 2017	Supplement 8: Report Reference: – RR211742 dated 10th November 2017. Description of the Change: Addition of option a = 03.
24th October 2018	Supplement 9: Report Reference: – RR215447 dated 24th October 2018. Description of the Change: Update lower operating temperatures from -30°C to -40°C. Update FM Class 3600 from 2011 to 2018.
30th July 2020	Supplement 10: Report Reference: – RR224030 dated 30th July 2020. Description of the Change: Added load cell variation PR 6261.

THIS CERTIFICATE MAY ONLY BE REPRODUCED IN ITS ENTIRETY AND WITHOUT CHANGE

FM Approvals LLC. 1151 Boston-Providence Turnpike, Norwood, MA 02062 USA
T: +1 (1) 781 762 4300 F: +1 (1) 781 762 9375 E-mail: information@fmapprovals.com www.fmapprovals.com

F 347 (Mar 16) Page 3 of 3

14.8 4012 101 5688

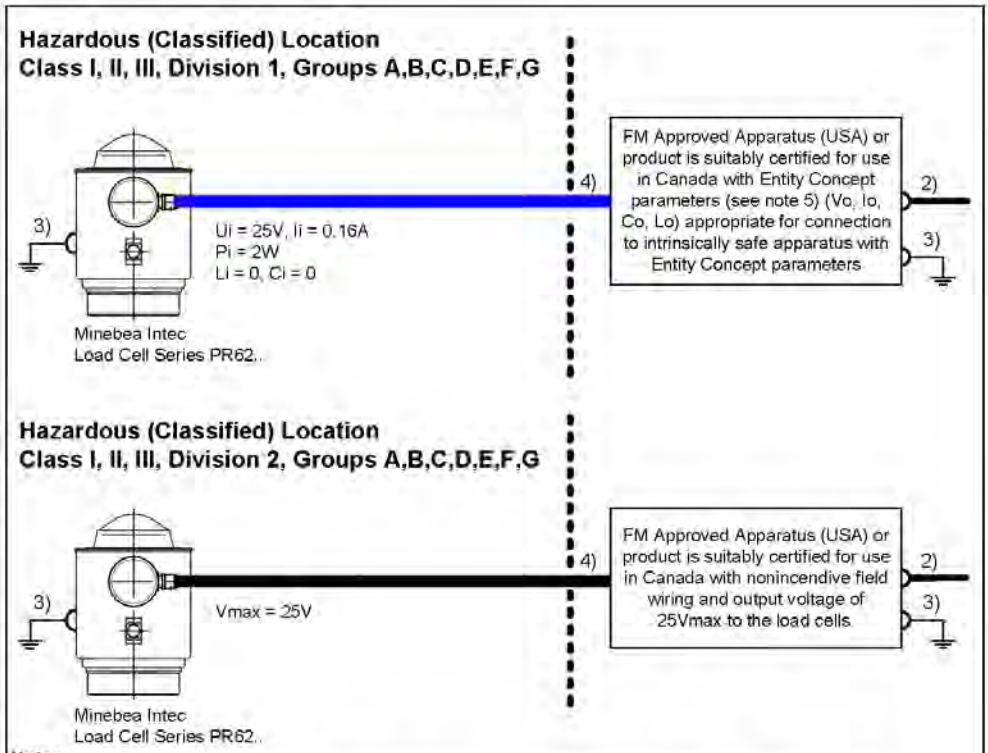

Notes

1) In the **USA**: The installation must be in accordance with the National Electrical Code ®, NFPA 70 and ANSI / ISA-RP 12.06.01.
   In **Canada**: The installation must be in accordance with the Canadian Electrical Code ®, Part 1.
2) The apparatus must not be connected to any device that uses or generates in excess of 250Vrms or DC.
   U_m = 250V.
3) In the **USA**: The Apparatus must be connected to a suitable ground electrode per National Electrical Code ®, NFPA 70, Article 504. The resistance of the ground pad must be less than 1 ohm.
   In **Canada**: The Apparatus must be connected to a suitable ground electrode per Canadian Electrical Code ®, Part 1. The resistance of the ground pad must be less than 1 ohm.
   The load cell ground (housing) must be insulated from the surface on which it is mounted or be at the same potential of the NRTL approved apparatus ground as per installation drawings.
4) **Connection must be made in accordance with the manufacturer's instructions** of the NRTL approved apparatus.
5) The Entity Concept allows interconnection of intrinsically safe apparatus with associated apparatus not specifically examined in combination as a system when the approved values of Vo and Io of the associated apparatus are less than or equal to Vi and Ii of the intrinsically safe apparatus and the approved values of Co and Lo of the associated apparatus are greater than Ci and Li of the intrinsically safe apparatus plus all cable parameters.
7) Ambient temperature range:
   -40°C .... +55°C (-40°F .... +131°F) for T5 and -40°C .... +70°C (-40°F .... +158°F) for T4A.
8) **WARNING:** SUBSTITUTION OF COMPONENTS MAY IMPAIR INTRINSIC SAFETY.
   AVERTISSEMENT: LA SUBSTITUTION DE COMPOSANTS PEUT COMPROMETTRE LA SÉCURITÉ INTRINSÈQUE.

Ex	Datum Date	Name	Material				Maßstab / Scale
Erstellt Written by	20.08.18	Schallhorn	Minebea Intec		Benennung / Title: Load Cells Series PR62..		1:1
Geprüft Reviewed by	20.08.18	Hiller					Blatt Sheet 1
Freigabe Released by	20.08.18	Schallhorn	Ausgabe / Revision 04	Änderung / Alteration PA50180542	Zeichnungs-Nr. / Drawing number 4012 101 5688	Teildok. Nr./ Part doc. no 592	von of 1

Weitergabe sowie Vervielfältigung dieses Dokuments, Verwertung und Mitteilung seines Inhaltes sind nicht ausdrücklich gestattet. Zuwiderhandlungen verpflichten zu Schadensersatz. Alle Rechte für den Fall der Patent-, Gebrauchsmuster oder Geschmacksmustereintragung vorbehalten.

The copying, distribution and utilization of this document as well as the communication of its contents to others without expressed authorization is prohibited. Offenders will be held liable for the payment of damages. All rights reserved in the event of the grant of a patent, utility model or ornamental design registration.

14.9 MEU18004

EU-Declaration of Conformity

(in accordance with ISO/IEC 17050-1)

MEU18004 Rev. 2

Minebea intec
The true measure

1. Product model | product number | solely valid for project number:
   - 1.1 Load Cell - Novego® | PR 6261 | ----
   - 1.2 Load Cell - Novego® + Converter Connexx ® | PR 6261 + PR 6150 | ----

2. Name and address of the manufacturer (2.1) and his authorized representative (2.2):
   - 2.1 Minebea Intec GmbH, Meiendorfer Straße 205 A, 22145 Hamburg, Germany
   - 2.2 /

3. This declaration of conformity is issued under the sole responsibility of the manufacturer.

4. Object(s) of the declaration:
   - 4.1 PR 6261; PR 6261 + PR 6150
   - 4.2 PR 6261 (A.1)
   - 4.3 PR 6261 (A.2)
   - 4.4 PR 6261/_____E

5. The object(s) of the declaration described above is in conformity with the relevant Union harmonization legislation:

		(4.1)	(4.2)	(4.3)	(4.4)
5.1	2014/30/EU	(6.1)	(6.1)	(6.1)	(6.1)
5.2	2011/65/EU	(6.2)	(6.2)	(6.2)	(6.2)
5.3	2014/34/EU		(6.3)	(6.4)	(6.5)

6. References to the relevant harmonized standards used or references to the other technical specifications in relation to which conformity is declared:

6.1	2014/30/EU	EN 61326-1:2013, EN 61000-4-20:2010
6.2	2011/65/EU	EN 50581:2012
6.3	2014/34/EU	EN 60079-0:2012+A11:2013, EN 60079-15:2010, EN 60079-31:2014
6.4	2014/34/EU	EN 60079-0:2012+A11:2013, EN 60079-31:2014
6.5	2014/34/EU	EN 60079-0:2012+A11:2013, EN 60079-11:2012

7. The notified body w performed x and issued the certificate y relevant for z:

	w	x	y	z
7.1	/	Manufacturer's certificate	MIN16ATEX001X	(4.2)
7.2	0032	EC-Type Examination Certificate	TÜV 03 ATEX 2301 X	(4.3)
7.3	0158	EC-Type Examination Certificate	BVS 16 ATEX E 005	(4.4)
7.4	0102	Production Quality Assessment Notification	PTB 02 ATEX Q010	(4.3), (4.4)

Minebea Intec GmbH
Hamburg, 13. Jan. 2020

Wolf Dieter Schulze	Oliver Freitag	Torben Hiller
Managing Director	CE Certification	Ex Approval Manager

1/6

EU-Declaration of Conformity

(in accordance with ISO/IEC 17050-1)

MEU18004 Rev. 2

A. Additional information on ( ):

A.1	(7.1)	Marking	II 3G Ex nA IIC T6 Gc II 3D Ex tc IIIC T85°C Dc MIN16ATEX001X
A.2	(7.2)	Marking	II 1 D Ex ta IIIC T160 °C Da TÜV 03 ATEX 2301 X
A.3	(7.3)	Marking	II 1G Ex ia IIC T6 Ga BVS 16 ATEX E 005
A.4	(6.5)	The above-mentioned product is in line with the requirements of the directive 2014/34/EU. One or more of the European Standards mentioned are already replaced by new editions. The manufacturer declares that the product also complies with these new editions, as the changed requirements of the new Standards do not affect the product.	

2/6

EU-Declaration of Conformity

(in accordance with ISO/IEC 17050-1)

MEU18004 Rev. 2

Minebea intec
The true measure

български (bg)

Декларация за съответствие
1. Модел на продукта / Номер на продукта / валидно само за номера на проекта:
2. Наименование и адрес на производителя (2.1) и на неговия упълномощен представител (2.2):
3. Настоящата декларация за съответствие е издадена на отговорността на производителя.
4. Предмет(и) на декларацията:
5. Предметът (ите) на декларацията, описан(и) по-горе отговаря(т) на съответното законодателство на Съюза за хармонизация.
6. Позоваване на използваните хармонизирани стандарти или позоваване на други технически спецификации, по отношение на които се декларира съответствие:
7. Нотифицираният орган w извърши x и издаде сертификата y, отнасящ се за z:
A. Допълнителна информация за ( ):
A.1 Маркировка
A.2 Маркировка
A.3 Маркировка
A.4 Горепосоченият продукт съответства на изискванията на Директива 2014/34/ЕС. Един или повече от упоменатите европейски стандарти вече са заменени от нови издания. Производителят декларира, че продуктът съответства и на тези нови издания, тъй като променените изисквания на новите стандарти не засягат продукта.

čeština (cs)

Prohlášení o shodě
1. Model výrobku / číslo výrobku / platné pouze pro číslo projektu:
2. Jméno a adresa výrobce (2.1) a jeho zplnomocněného zástupce (2.2):
3. Toto prohlášení o shodě se vydává na výlradní odpovědnost výrobce.
4. Předmět(y) prohlášení:
5. Výše popsaný předmět / Výše popsané předměty prohlášení je/jsou ve shodě s příslušnými harmonizačními právními předpisy Unie:
6. Odkazy na příslušné harmonizované normy, které byly použity, nebo na jiné technické specifikace, na jejichž základě se shoda prohlašuje:
7. Oznámený subjekt w provedl x a vydal certifikát y relevantní z hlediska z:
A. Další informace o ( ):
A.1 Označení
A.2 Označení
A.3 Označení
A.4 Výše uvedený výrobek je v souladu s požadavky směrnice Evropského parlamentu a Rady 2014/34/EU. Jedna nebo více uvedených evropských norem již byly nahrazeny novými vydáními. Výrobce prohlašuje, že výrobek je v souladu i s těmito novými vydáními, neboť upravené požadavky těchto nových norem nemají na výrobek vliv.

dansk (da)

Overensstemmelseserklæring
1. Produktmodel / produktnummer / gælder kun for projektnummer:
2. Fabrikantens (2.1) og dennes bemyndigede repræsentants (2.2) navn og adresse:
3. Denne overensstemmelseserklæring udstedes på fabrikantens ansvar.
4. Genstand(ene) for erklæringen:
5. Genstanden(e) for erklæringen, som beskrevet ovenfor, er i overensstemmelse med den relevante EU-harmoniseringslovgivning.
6. Referencer til de relevante anvendte harmoniserede standarder eller til de andre tekniske specifikationer, som der erklæres overensstemmelse med:
7. Det bemyndigede organ w har foretaget x og udstedt attesten y, der gælder for z:
A. Supplerende oplysninger om ( ):
A.1 Mærkning
A.2 Mærkning
A.3 Mærkning
A.4 Ovenstående produkt opfylder kravene i direktiv 2014/34/EU. En eller flere af de anførte europæiske standarder er allerede blevet erstattet af nye udgaver. Fabrikanten erklærer, at produktet også er i overensstemmelse med de nye udgaver, idet de ændrede krav i de nye standarder ikke berører produktet.

Deutsch (de)

Konformitätserklärung
1. Produktmodell / Produktnummer / gilt ausschließlich für Projekt-Nr.:
2. Name und Anschrift des Herstellers (2.1) und seines Bevollmächtigten (2.2):
3. Die alleinige Verantwortung für die Ausstellung dieser Konformitätserklärung trägt der Hersteller.
4. Gegenstände der Erklärung:
5. Die oben beschriebenen Gegenstände der Erklärung erfüllen die einschlägigen Harmonisierungsrechtsvorschriften der Union:
6. Angabe der einschlägigen harmonisierten Normen oder der anderen technischen Spezifikationen, die der Konformitätserklärung zugrunde gelegt wurden:
7. Die notifizierte Stelle w hat x und die für z relevante Bescheinigung y ausgestellt:
A. Zusatzangaben zu ( ):
A.1 Kennzeichnung
A.2 Kennzeichnung
A.3 Kennzeichnung
A.4 Das oben genannte Produkt erfüllt die Anforderungen der Richtlinie 2014/34/EU. Mindestens eine der aufgeführten europäischen Normen ist bereits durch eine neue Ausgabe ersetzt worden. Der Hersteller erklärt, dass das Produkt mit diesen neuen Ausgaben ebenfalls konform ist, da die geänderten Anforderungen der neuen Normen das Produkt nicht betreffen.

Ελληνικά (el)

Δήλωση συμμόρφωσης
1. Μοντέλο προϊόντος / αριθμός προϊόντος / ισχύει μόνο για τον αριθμό του έργου:
2. Όνομα και διεύθυνση του κατασκευαστή (2.1) και του εξουσιοδοτημένου αντιπροσώπου του (2.2):
3. Η παρούσα δήλωση συμμόρφωσης εκδίδεται με αποκλειστική ευθύνη του κατασκευαστή.
4. Στόχος της δήλωσης:
5. Ο στόχος της δήλωσης που περιγράφεται παραπάνω είναι σύμφωνος με τη σχετική ενωσιακή νομοθεσία εναρμόνισης:
6. Παραπομπές στα σχετικά εναρμονισμένα πρότυπα που χρησιμοποιήθηκαν ή παραπομπές στις λοιπές τεχνικές προδιαγραφές σε σχέση με τις οποίες δηλώνεται η συμμόρφωση:
7. Ο κοινοποιημένος οργανισμός w διεξήγε x και εξέδοσε το πιστοποιητικό y όπως απαιτείται για z:
A. Πρόσθετες πληροφορίες σχετικά με ( ):
A.1 Σήμανση
A.2 Σήμανση
A.3 Σήμανση
A.4 Το προαναφερθέν προϊόν συμμορφώνεται με τις απαιτήσεις της οδηγίας 2014/34/ΕΕ. Ένα ή περισσότερα από τα αναφερόμενα ευρωπαϊκά πρότυπα έχουν αντικατασταθεί ήδη από νέες εκδόσεις. Ο κατασκευαστής δηλώνει ότι το προϊόν συμμορφώνεται επίσης με τις εν λόγω νέες εκδόσεις, καθώς οι τροποποιημένες απαιτήσεις των νέων προτύπων δεν επηρεάζουν το προϊόν.

español (es)

Declaración de conformidad
1. Modelo de producto/número de producto / únicamente válido para el número de proyecto:
2. Nombre y dirección del fabricante (2.1) y de su representante autorizado (2.2):
3. La presente declaración de conformidad se expide bajo la exclusiva responsabilidad del fabricante.
4. Objeto(s) de la declaración:
5. El/Los objeto(s) de la declaración descrito(s) anteriormente son conformes con la legislación de armonización pertinente de la Unión Europea:
6. Referencias a las normas armonizadas pertinentes utilizadas o referencias a las otras especificaciones técnicas respecto a las cuales se declara la conformidad:
7. El organismo notificado W ha efectuado X y expedido el certificado Y relevante para Z:
A. Información adicional en ( ):
A.1 Marcado
A.2 Marcado
A.3 Marcado
A.4 El producto mencionado anteriormente cumple con los requisitos de la directiva 2014/34/UE. Una o más de las normas europeas mencionadas ya se han substituido por nuevas ediciones. El fabricante declara que el producto también cumple con estas nuevas ediciones, ya que los requisitos modificados de las nuevas normas no afectan al producto.

3/6

EU-Declaration of Conformity

(in accordance with ISO/IEC 17050-1)

MEU18004 Rev. 2

Minebea intec
The true measure

eesti keel (et)

Vastavusdeklaratsioon
1. Tootemudel / tootenumber / kehtib vaid järgmise projekti puhul:
2. Tootja nimi ja aadress (2.1) ning tema volitatud esindaja (2.2):
3. Käesolev vastavusdeklaratsioon on välja antud tootja ainuvastutusel.
4. Deklareeritav toode:
5. Ülalkirjeldatud deklareeritav toode on kooskõlas asjaomaste liidu ühtlustamisaktidega:
6. Viited kasutatud harmoneeritud standarditele või viited muudele tehnilistele spetsifikatsioonidele, millele vastavust deklareeritakse:
7. Teavitatud asutus w teostas x ja andis välja tõendi z, mis on asjakohane y-le:
A. Lisateave järgmise kohta ( ):
A.1 Märgistus
A.2 Märgistus
A.3 Märgistus
A.4 Ülalnimetatud toode on kooskõlas direktiivi 2014/34/EL nõuetega. Üks või mitu nimetatud Euroopa standardit on asendatud juba mõne väljaannetega. Tootja kinnitab, et toode on kooskõlas ka nende mõne väljaannetega, kuna mõne standardite muudetud nõuded ei mõjuta toodet.

français (fr)

Déclaration de conformité
1. Modèle / numéro de produit / valable uniquement pour le numéro de projet:
2. Nom et adresse du fabricant (2.1) et de son mandataire (2.2):
3. La présente déclaration de conformité est établie sous la seule responsabilité du fabricant.
4. Objet(s) de la déclaration :
5. Le ou les objets de la déclaration décrite ci-dessus est/sont conforme(s) à la législation d'harmonisation de l'Union applicable :
6. References des normes harmonisées pertinentes appliquées ou des autres spécifications techniques par rapport auxquelles la conformité est déclarée :
7. L'organisme notifié w a effectué x et a établi l'attestation y applicable à z :
A. Informations complémentaires relatives à ( ) :
A.1 Marquage
A.2 Marquage
A.3 Marquage
A.4 Le produit susmentionné est conforme aux exigences de la directive 2014/34/UE. Une ou plusieurs des normes européennes mentionnées ont déjà été remplacées par de nouvelles éditions. Le fabricant déclare que le produit est également conforme à ces nouvelles éditions, dans la mesure où les exigences modifiées des nouvelles normes n'affectent pas le produit.

hrvatski (hr)

Izjava o sukladnosti
1. Model proizvoda / broj proizvoda / vrijedi samo za broj projekta:
2. Naziv i adresa proizvođača (2.1) i njegovog ovlaštenog zastupnika (2.2):
3. Za izdavanje ove izjave o izjave o sukladnosti odgovoran je isključivo proizvođač.
4. Predmet(i) izjave:
5. Predmet(i) navedene izjave je/su u skladu s mjerodavnim zakonodavstvom Unije o usklađivanju:
6. Pozivanja na relevantne primjenjene usklađene norme ili pozivanja na ostale tehničke specifikacije u vezi s kojima se izjavljuje sukladnost:
7. Prijavljeno tijelo w provelo je x i izdalo certifikat y koji je relevantan za z:
A. Dodatne informacije o proizvodu ( ):
A.1 Označavanje
A.2 Označavanje
A.3 Označavanje
A.4 Prethodno navedeni proizvod u skladu je sa zahtjevima Direktive 2014/34/EU. Jedna ili više navedenih europskih normi već je zamijenjeno novim izdanjima. Proizvođač izjavljuje da je proizvod u skladu i s tim novim izdanjima, jer se izmijenjeni zahtjevi tih novih normi ne odnose na proizvod.

magyar (hu)

Megfelelőségi nyilatkozat
1. Termékmodell / termékszám / kizárólag az alábbi projektszámhoz érvényes:
2. A gyártó (2.1) vagy adott esetben meghatalmazott képviselőjének (2.2) neve és címe:
3. Ezt a megfelelőségi nyilatkozatot a gyártó kizárólagos felelőssége mellett adják ki.
4. A nyilatkozat tárgya(i):
5. A fent ismertetett nyilatkozat tárgya megfelel a vonatkozó uniós harmonizációs jogszabályoknak:
6. Az alkalmazott harmonizáló szabványokra való hivatkozás vagy az azokra az egyéb műszaki leírásokra való hivatkozás, amelyekkel kapcsolatban megfelelőségi nyilatkozatot tettek:
7. A(z) w bejelentett szervezet elvégezte a(z) x eljárást, és kiállította a(z) z kapcsolódó y tanúsítványt:
A. További információk ( ):
A.1 Jelölés
A.2 Jelölés
A.3 Jelölés
A.4 A fentebb megnevezett termék megfelel a 2014/34/EU irányelvben foglalt követelményeknek. Egy vagy több említett Európai szabvány a kiállítás óta frissült. A gyártó kijelenti, hogy a termék megfelel a szabványok legújabb kiadásában foglalt követelményeknek, mivel a szabvány módosítása nem érintik az adott terméket.

italiano (it)

Dichiarazione di conformità
1. Modello di prodotto / numero di prodotto / valido unicamente per numero di progetto:
2. Nome e indirizzo del fabbricante (2.1) e del relativo rappresentante autorizzato (2.2):
3. La presente dichiarazione di conformità è rilasciata sotto la responsabilità esclusiva del fabbricante.
4. Oggetto/i della dichiarazione:
5. L'oggetto o gli oggetti della dichiarazione di cui sopra sono conformi alla pertinente normativa di armonizzazione dell'Unione:
6. Riferimento alle pertinenti norme armonizzate utilizzate o riferimenti alle altre specifiche tecniche in relazione alle quali è dichiarata la conformità:
7. L'organismo notificato w ha effettuato x e rilasciato il certificato y pertinente a z:
A. Informazioni aggiuntive su ( ):
A.1 Marcatura
A.2 Marcatura
A.3 Marcatura
A.4 Il prodotto menzionato in precedenza è conforme alle prescrizioni della direttiva 2014/34/UE. Una o più norme UE menzionate sono già state sostituite da nuove versioni. Il fabbricante dichiara che il prodotto è conforme anche alle nuove versioni in quanto le prescrizioni modificate delle nuove norme non interessano il prodotto.

Lietuvių kalba (lt)

Atitikties deklaracija
1. Gaminio modelis / gaminio numeris / galioja tik projekto numeriui:
2. Gamintojo (2.1) ir jo įgaliotojo atstovo (2.2) pavadinimas ir adresas:
3. Ši atitikties deklaracija išduota tik gamintojo atsakomybe:
4. Deklaracijos objektas (objektai):
5. Pirmiau aprašytas deklaracijos objektas (objektai) atitinka susijusius derinamosius Sąjungos teisės aktus:
6. Susijusių taikytų darnųjų standartų nuorodos arba kitų techninių specifikacijų, pagal kurias buvo deklaruota atitiktis, nuorodos:
7. Notifikuotoji įstaiga w atliko x ir išdavė sertifikatą y dėl z:
A. Papildoma informacija ( ):
A.1 Ženklinimas
A.2 Ženklinimas
A.3 Ženklinimas
A.4 Pirmiau nurodytas gaminys atitinka Direktyvos 2014/34/ES reikalavimus. Vienas ar keli nurodyti Europos standartai jau pakeisti naują redakciją. Gamintojas patvirtina, kad gaminys taip pat atitinka naująją redakciją, nes pakeisti naujųjų standartų reikalavimai gaminio poveikio neturi.

4/6

EU-Declaration of Conformity

(in accordance with ISO/IEC 17050-1)

MEU18004 Rev. 2

Minebea intec
The true measure

latviešu valoda (lv)

Atbilstības deklarācija
1. Produkta modelis / produkta numurs / dizaina tipa projektam Nr.:
2. Ražotāja (2.1.) un tā pilnvarotā pārstāvja (2.2.) nosaukums un adrese:
3. Šī atbilstības deklarācija ir izdota vienīgi uz ražotāja atbildību.
4. Deklarācijas priekšmets vai priekšmeti:
5. Iepriekš aprakstītais deklarācijas priekšmets vai priekšmeti atbilst attiecīgajam Savienības saskaņošanas tiesību aktam:
6. Atsauces uz attiecīgajiem izmantojamiem saskaņotajiem standartiem vai uz citām tehniskajām specifikācijām, attiecībā uz ko tiek deklarēta atbilstība:
7. Paziņotā struktūra w ir veikusi x un izsniegusi sertifikātu y, kas attiecas uz z:
A. Papildu informācija par ( ):
A.1 Marķējums
A.2 Marķējums
A.3 Marķējums
A.4 Iepriekš minētais produkts atbilst Direktīvas 2014/34/ES prasībām. Viens vai vairāki no minētajiem Eiropas standartiem jau ir aizstāti ar jaunām versijām. Ražotājs apliecina, ka produkts atbilst arī šim jaunajām versijām, jo jauno standartu mainītās prasības neietekmē produktu.

malti (mt)

Dikjarazzjoni ta' konformità
1. Mudell tal-prodott / numru tal-prodott / validu biss ghan-numru tal-progett:
2. L-isem u l-indirizz tal-manifattur (2.1) u tar-rappresentant awtorizzat tieghu (2.2):
3. Din id-dikjarazzjoni ta' konformità (inkluża) tafu ir-responsabbilità unika tal-manifattur.
4. L-ghan(ijiet) tad-dikjarazzjoni:
5. L-ghan(ijiet) tad-dikjarazzjoni deskritt(i) hawn fuq huwa(huma) konformi mal-legislazzjoni ta' armonizzazzjoni rilevanti tal-Unjoni:
6. Ir-referenzi ghall-istandards armonizzati rilevanti li nużaw, jew ir-referenzi ghall-ispecifikazzjonijiet teknici l-ohra li skonthom qed tigi ddikjarata l-konformità:
7. Il-korp notifikat w wettaq x u hareg ic-certifikat y rilevanti ghal z:
A. Informazzjoni addizzjonali fuq ( ):
A.1 Immarkar
A.2 Immarkar
A.3 Immarkar
A.4 Il-prodott msemmi hawn fuq huwa f'konformità mar-rekwiżiti tal-Direttiva 2014/34/UE. Wieħed jew aktar mill-istandards Ewropej imsemmija diga gew sostituiti b'edizzjonijiet godda biss. Il-manifattur jiddikjara li l-prodott huwa konformi wkoll ma' dawn l-edizzjonijiet godda, ghax ir-rekwiziti tal-istandards il-godda ma jaffettwawx il-prodott

nederlands (nl)

Conformiteitsverklaring
1. Productmodel / productnummer / uitsluitend geldig voor projectnummer:
2. Naam en adres van de fabrikant (2.1) en zijn gemachtigde (2.2):
3. Deze conformiteitsverklaring wordt verstrekt onder volledige verantwoordelijkheid van de fabrikant.
4. Voorwerp(en) van de verklaring:
5. Het (de) hierboven beschreven voorwerp(en) is (zijn) in overeenstemming met de desbetreffende harmonisatiewetgeving van de Unie:
6. Vermelding van de toegepaste relevante geharmoniseerde normen of van de overige technische specificaties waarop de conformiteitsverklaring betrekking heeft:
7. De aangemelde instantie w heeft een x uitgevoerd en het certificaat y verstrekt dat relevant is voor z:
A. Aanvullende informatie over ( ):
A.1 Markering
A.2 Markering
A.3 Markering
A.4 Het bovengenoemde product voldoet aan de eisen van Richtlijn 2014/34/EU. Een of meer van de genoemde Europese normen zijn inmiddels vervangen door nieuwe versies. De fabrikant verklaart dat het product ook aan deze nieuwe versies voldoet, aangezien de gewijzigde eisen van de nieuwe normen geen gevolgen hebben voor het product.

polski (pl)

Deklaracja zgodności
1. Model produktu / numer produktu / ważny wyłącznie dla projektu o numerze:
2. Nazwa i adres producenta (2.1) oraz jego upoważnionego przedstawiciela (2.2):
3. Niniejsza deklaracja zgodności wydana zostaje na wyłączną odpowiedzialność producenta.
4. Przedmiot(-y) deklaracji:
5. Wymieniony powyżej przedmiot (lub przedmioty) niniejszej deklaracji jest zgodny z odnośnymi wymaganiami unijnego prawodawstwa harmonizacyjnego:
6. Odwołania do odnośnych norm zharmonizowanych, które zastosowano, lub do innych specyfikacji technicznych, w stosunku do których deklarowana jest zgodność:
7. Jednostka notyfikowana w przeprowadziła x i wydała certyfikat y odpowiedni dla z:
A. Informacje dodatkowe ( ):
A.1 Oznakowanie
A.2 Oznakowanie
A.3 Oznakowanie
A.4 Wyżej wymieniony produkt jest zgodny z wymaganiami Dyrektywy 2014/34/UE. Co najmniej jedna wymieniona norma europejska została już zastąpiona nowym wydaniem. Producent oświadcza, że produkt spełnia wymagania także takich nowych wydań norm, gdyż zmienione wymagania zawarte w nowych normach nie mają wpływu na produkt.

português (pt)

Declaração de conformidade
1. Modelo do produto / número do produto / somente válido para o número de projeto:
2. Nome e endereço do fabricante (2.1) e do seu mandatário (2.2):
3. A presente declaração de conformidade é emitida sob a exclusiva responsabilidade do fabricante.
4. Objeto(s) da declaração:
5. O(s) objeto(s) da declaração acima descrito(s) está(ão) em conformidade com a legislação aplicável de harmonização da União:
6. Referências às normas harmonizadas aplicáveis utilizadas ou às outras especificações técnicas em relação às quais é declarada a conformidade:
7. O organismo notificado w realizou x e emitiu o certificado y relevante para z:
A. Informações complementares relativas a ( ):
A.1 Marcação
A.2 Marcação
A.3 Marcação
A.4 O produto acima mencionado está em consonância com os requisitos da diretiva 2014/34/UE. Uma ou mais das Normas Europeias mencionadas acima já foram substituídas por novas edições. O fabricante declara que o produto também está em conformidade com essas novas edições, uma vez que os requisitos alterados dessas novas Normas não afetam o produto.

română (ro)

Declarație de conformitate
1. Modelul de produs / Număr produs / valabil numai pentru numărul proiectului:
2. Denumirea și adresa producătorului (2.1) și a reprezentantului său autorizat (2.2):
3. Prezenta declarație de conformitate este emisă pe răspunderea exclusivă a producătorului.
4. Obiectul (obiectele) declarației:
5. Obiectul (obiectele) declarației descrise mai sus sunt în conformitate cu legislația relevantă de armonizare a Uniunii:
6. Trimiteri la standardele armonizate relevante folosite sau trimiteri la celelalte specificații tehnice în legătură cu care se declară conformitatea:
7. Organismul notificat w a efectuat x și a emis certificatul y corespunzător pentru z:
A. Informații suplimentare despre ( ):
A.1 Marcaj
A.2 Marcaj
A.3 Marcaj
A.4 Produsul menționat anterior respectă cerințele directivei 2014/34/UE. Unul sau mai multe din standardele europene menționate sunt deja înlocuite de noi ediții. Producătorul declară faptul că produsul respectă de asemenea aceste noi ediții, așadar cerințele modificate ale noilor standarde nu afectează produsul.

5/6

EU-Declaration of Conformity

(in accordance with ISO/IEC 17050-1)

MEU18004 Rev. 2

Minebea intec
The true measure

slovenčina (sk)

Vyhlásenie o zhode
1. Model výrobku / číslo výrobku / platné len pre číslo projektu:
2. Meno/názov a adresa výrobcu (2.1) a jeho splnomocneného zástupcu (2.2):
3. Toto vyhlásenie o zhode sa vydáva na vlastnú zodpovednosť výrobcu:
4. Predmet(-y) vyhlásenia:
5. Uvedený predmet či uvedené predmety vyhlásenia sú v zhode s príslušnými harmonizačnými právnymi predpismi Únie:
6. Odkazy na príslušné použité harmonizované normy alebo odkazy na iné technické špecifikácie, v súvislosti s ktorými sa zhoda vyhlasuje:
7. Notifikovaný orgán w vykonal x a vydal certifikát y relevantný pre z:
A. Doplňujúce informácie o ( ):
A.1 Označenie
A.2 Označenie
A.3 Označenie
A.4 Vyššie uvedený výrobok je v súlade s požiadavkami smernice 2014/34/EÚ. Jedna alebo viaceré z uvedených európskych noriem sú už nahradené novými vydaniami. Výrobca vyhlasuje, že výrobok je v zhode aj s týmto novými vydaniami, pretože zmenené požiadavky nových noriem nemajú na výrobok vplyv.

slovenščina (sl)

Izjava o skladnosti
1. Model proizvoda / serijska številka proizvoda / veljavno samo za številko projekta:
2. Ime in naslov proizvajalca (2.1) ter njegovega pooblaščenega zastopnika (2.2):
3. Za izdajo te izjave o skladnosti je odgovoren izključno proizvajalec:
4. Predmet(i) izjave:
5. Predmet(i) navedene izjave je (so) v skladu z ustrezno zakonodajo Unije o harmonizaciji:
6. Sklicevanja na uporabljene ustrezne harmonizirane standarde ali sklicevanja na druge tehnične specifikacije v zvezi s skladnostjo, ki je navedena v izjavi:
7. Priglašeni organ w je izvedel x in izdal certifikat y, pomemben za z:
A. Dodatne informacije o ( ):
A.1 Oznaka
A.2 Oznaka
A.3 Oznaka
A.4 Zgoraj navedeni proizvod je v skladu z zahtevami direktive 2014/34/EU. Enega ali več omenjenih evropskih standardov so že nadomestile nove izdaje. Proizvajalec izjavlja, da je proizvod skladen s temi novimi izdajami, saj spremenjene zahteve novih standardov ne vplivajo na proizvod.

suomi (fi)

Vaatimustenmukaisuusvakuutus
1. Tuotemalli / tuotenumero / koskee vain projektinumeroa:
2. Valmistajan (2.1) ja valtuutetun edustajan (2.2) nimi ja osoite:
3. Tämä vaatimustenmukaisuusvakuutus on annettu valmistajan yksinomaisella vastuulla:
4. Vakuutuksen kohde (kohteet):
5. Edellä kuvattu (kuvatut) vakuutuksen kohde (kohteet) on (ovat) asiaa koskevan unionin yhdenmukaistamislainsäädännön vaatimusten mukainen (mukaisia):
6. Viittaus niihin asiaa koskeviin yhdenmukaistettuihin standardeihin, joita on käytetty, tai viittaus muihin teknisiin eritelmiin, joiden perusteella vaatimustenmukaisuusvakuutus on annettu:
7. Ilmoitettu laitos w suoritti x ja antoi todistuksen y liittyen z:
A. Lisätietoja ( ):
A.1 Merkintä
A.2 Merkintä
A.3 Merkintä
A.4 Yllä mainittu tuote vastaa direktiivin 2014/34/EU vaatimuksia. Yksi tai useampi mainituista eurooppalaisista standardeista on jo korvattu uusilla painoksilla. Valmistaja vakuuttaa, että tuote vastaa myös näitä uusia painoksia, koska muiden standardien muutetut määräykset eivät vaikuta tuotteeseen.

svenska (sv)

Försäkran om överensstämmelse
1. Produktmodell / produktnummer / gäller endast för projektnummer:
2. Tillverkarens namn och adress (2.1) och dess auktoriserade representant (2.2):
3. Denna försäkran om överensstämmelse utfärdas på tillverkarens eget ansvar:
4. Föremål för försäkran:
5. Föremålet/föremålen för försäkran ovan överensstämmer med den relevanta harmoniserade unionslagstiftningen:
6. Hänvisningar till de relevanta harmoniserade standarder som använts eller hänvisningar till de andra tekniska specifikationer enligt vilka överensstämmelsen försäkras:
7. Det anmälda organet w har utfört x och utfärdat intyget y relevant för z:
A. Ytterligare information om ( ):
A.1 Märkning
A.2 Märkning
A.3 Märkning
A.4 Ovan nämnda produkt är i linje med kraven i direktiv 2014/34/EU. En eller flera av de nämnda europeiska standarderna har redan ersatts av nya upplagor. Tillverkaren försäkrar att produkten även överensstämmer med dessa nya upplagor, då de ändrade kraven i de nya standarderna inte påverkar produkten.

6/6

14.10 RU Д-DE.A301.B.05345

ЕВРАЗИЙСКИЙ ЭКОНОМИЧЕСКИЙ СОЮЗ
ДЕКЛАРАЦИЯ О СООТВЕТСТВИИ

Заявитель Общество с ограниченной ответственностью «ДС Компания».
Основной государственный регистрационный номер: 1107746937374.
Место нахождения: 105037, Российская Федерация, город Москва, улица 3-я Парковая, дом 9, квартира 18
Телефон: 89660273663, адрес электронной почты: dc.company2000@gmail.com
в лице Генерального директора Ежова Олега Олеговича
заявляет, что
Тензодатчики типов: PR6201, PR6202, PR6211, PR6212, PR6251, PR6221, PR6261, PR6224, PR6204, PR6246, PR6241, PR6207
Продукция изготовлена в соответствии с Директивой 2014/30/ЕС «Электромагнитная совместимость»
изготовитель Minebea Intec GmBH.
Место нахождения: ГЕРМАНИЯ, Melendorfer Strasse 205, 22145 Hamburg

код ТН ВЭД ЕАЭС 9031 80 380 0
Серийный выпуск
соответствует требованиям
Технического регламента Таможенного союза ТР ТС 020/2011 "Электромагнитная совместимость технических средств"

Декларация о соответствии принята на основании
протокола испытаний № 314-04/12-СТ от 13.04.2017 года, выданного испытательной лабораторией «Серт-Тест» Общества с ограниченной ответственностью «Серт и Ко», регистрационный № РОСС RU.04ИДЮ0.002; руководства по эксплуатации; паспорта
Схема декларирования: 1д
Дополнительная информация
Условия хранения продукции в соответствии с требованиями ГОСТ 15150-69. Срок хранения (службы, годности) указан в прилагаемой к продукции эксплуатационной документации. Стандарты, обеспечивающие соблюдение требований Технического регламента Таможенного союза ТР ТС 020/2011 "Электромагнитная совместимость технических средств": ГОСТ 30804.3.2-2013 "Совместимость технических средств электромагнитная. Эмиссия гармонических составляющих тока техническими средствами с потребляемым током не более 16 А (в одной фазе). Нормы и методы испытаний", ГОСТ 30804.3.3-2013 "Совместимость технических средств электромагнитная. Ограничение изменений напряжения, колебаний напряжения и фликера в низковольтных системах электроснабжения общего назначения. Технические средства с потребляемым током не более 16 А (в одной фазе), подключаемые к электрической сети при несоблюдении определенных условий подключения. Нормы и методы испытаний"

Декларация о соответствии действительна с даты регистрации по 12.04.2022 включительно.

Ежов Олег Олегович

М.П.

Сведения о регистрации декларации о соответствии:

Регистрационный номер декларации о соответствии: ЕАЭС № RU Д-DE.A301.B.05345
Дата регистрации декларации о соответствии 13.04.2017

14.11 RU C-DE.МЮ62.В.05836

ТАМОЖЕННЫЙ СОЮЗ

СЕРТИФИКАТ СООТВЕТСТВИЯ

ЕАС

№ ТС RU C-DE.МЮ62.В.05836

Серия RU № 0589458

ОРГАН ПО СЕРТИФИКАЦИИ продукции Общество с ограниченной ответственностью «ПРОММАШ ТЕСТ».
Место нахождения: 117246, город Москва, Научный проезд, дом 8, строение 1, помещение XIX, комната №14-17.
Адрес места осуществления деятельности: 115114, Российская Федерация, город Москва, Дербеневская набережная, дом 11, помещение 60. Телефон: +7 (495) 481-33-80, адрес электронной почты: info@prommashtest.ru. Аттестат аккредитации регистрационный № РОСС RU.0001.11МЮ62. Дата регистрации аттестата аккредитации 28.10.2013 года

ЗАЯВИТЕЛЬ Общество с ограниченной ответственностью «ДС Компания».
Основной государственный регистрационный номер: 1107746937374.
Место нахождения: 105037, Российская Федерация, город Москва, улица 3-я Парковая, дом 9, офис 18
Телефон: 89295245611, адрес электронной почты: dc.company2000@gmail.com

ИЗГОТОВИТЕЛЬ Minebea Intec GmbH.
Место нахождения: ГЕРМАНИЯ, Meiendorfer Strasse 205 A, 22145 Hamburg

ПРОДУКЦИЯ Датчики нагрузки моделей PR 6201, PR 6212, PR 6261.
Маркировка взрывозащиты приведена в приложении (бланки №№ 0472416, 0472417).
Оборудование выпускается по Директиве 2014/34/ЕС и технической документации изготовителя для работы во взрывоопасных средах.
Серийный выпуск

КОД ТН ВЭД ТС 9031 80 980 0

СООТВЕТСТВУЕТ ТРЕБОВАНИЯМ Технического регламента Таможенного союза ТР ТС 012/2011 "О безопасности оборудования для работы во взрывоопасных средах"

СЕРТИФИКАТ ВЫДАН НА ОСНОВАНИИ
- акта о результатах анализа состояния производства Minebea Intec GmbH от 12.02.2018 года;
- протокола испытаний № 2024/2ИЛПМ-2018 от 26.02.2018 года. Испытательный центр Общество с ограниченной ответственностью «ПРОММАШ ТЕСТ», аттестат аккредитации регистрационный № RA.RU.21ВС05 действителен от 26.04.2016 года.

Схема сертификации: 1с

ДОПОЛНИТЕЛЬНАЯ ИНФОРМАЦИЯ
Срок службы, срок и условия хранения указаны в руководстве по эксплуатации.
Стандарты, обеспечивающие соблюдение требований Технического регламента Таможенного союза ТР ТС 012/2011 "О безопасности оборудования для работы во взрывоопасных средах": согласно приложению (бланки №№ 0472416, 0472417).

СРОК ДЕЙСТВИЯ С 27.02.2018 **ПО** 26.02.2023 **ВКЛЮЧИТЕЛЬНО**

М.П.

Руководитель (уполномоченное лицо) органа по сертификации (подпись) Иван Викторович Модянов (инициалы, фамилия)

Эксперт (эксперт-аудитор) (эксперты (эксперты-аудиторы)) (подпись) Анатолий Владимирович Ивочкин (инициалы, фамилия)

Бланк изготовлен ЗАО "ОПЦИОН", www.opcion.ru (лицензия № 05-05-09/003 ФНС РФ), тел. (495) 726 4742, Москва, 2013

ТАМОЖЕННЫЙ СОЮЗ

ПРИЛОЖЕНИЕ

К СЕРТИФИКАТУ СООТВЕТСТВИЯ № ТС RU C-DE.МЮ62.В.05836

Серия RU № 0472416

1. Назначение и область применения

Сертификат соответствия распространяется на датчики нагрузки моделей PR 6201, PR 6212, PR 6261, предназначенные для взвешивания бункеров, резервуаров и технологических емкостей.

Область применения - взрывоопасные зоны классов 0, 1, 2 по ГОСТ IEC 60079-10-1-2011 категорий взрывоопасных смесей IIA, IIB, IIC по ГОСТ Р МЭК 60079-20-1-2011, а также среды, содержащие взрывоопасную пыль подгрупп IIIA, IIIB, IIIC согласно маркировкам взрывозащиты.

2. Описание оборудования и средств обеспечения взрывозащиты

Датчики нагрузки моделей PR 6201, PR 6212, PR 6261 выполнены в цилиндрическом стальном корпусе со степенью защиты от внешних воздействий IP68 или IP69 в зависимости от исполнения. Устройства содержат мембрану и тензодатчик сопротивления, преобразующие механическую деформацию, возникающую при нагрузке датчика, в электрический сигнал.

Подключение датчиков осуществляется с помощью постоянно присоединенного кабеля из термопласта TPE.

Подробное описание конструкции датчиков приведено в руководствах по эксплуатации.

Основные технические данные:

Маркировка взрывозащиты ..... 0Ex ia IIC T6
2Ex nA IIC T6 X
Ex tc IIIC T85°C X
Ex ta IIIC T160°C X

Диапазон температур окружающей среды, °C ..... от -52 до +55
Степень защиты от внешних воздействий по ГОСТ 14254-2015 ..... IP68, IP69
Максимальное напряжение питания, В 25
Максимальная входная мощность, Вт 2

Параметры искробезопасных цепей приведены в таблице 2.1:

Таблица 2.1

Наименование	Значение
Максимальное входное напряжение U_i, В	25
Максимальный входной ток I_i, мА	160
Максимальная входная мощность P_i, Вт	2
Максимальная внутренняя емкость C_i, мкФ	0
Максимальная внутренняя индуктивность L_i, мГн	0

Взрывозащищенность датчиков обеспечивается выполнением их конструкции в соответствии с общими требованиями по ГОСТ 31610.0-2012, видом взрывозащиты «искробезопасная электрическая цепь «i» по ГОСТ 31610.11-2012, видом защиты «n» по ГОСТ 31610.15-2012 и видом взрывозащиты от воспламенения пыли «t» по ГОСТ Р МЭК 60079-31-2010.

Внесение изготовителем в конструкцию и техническую документацию изменений, влияющих на взрывобезопасность и соответствие газоанализаторов требованиям ТР ТС 012/2011, возможно только по согласованию с органом по сертификации ООО «ПРОММАШ ТЕСТ».

Данный сертификат соответствия подтверждает соответствие требованиям взрывобезопасности ТР ТС 012/2011 и не рассматривает любые другие виды безопасности газоанализаторов.

М.П.

Руководитель (уполномоченное лицо) органа по сертификации — подпись — Иван Викторович Модянов (инициалы, фамилия)

Эксперт-аудитор (эксперт) — подпись — Анатолий Владимирович Ивочкин (инициалы, фамилия)

АО «ОПЦИОН», Москва, 2016, «Б» лицензия № 05-05-09/003 ФНС РФ, тел. (495) 726 4742, www.opcion.ru

ТАМОЖЕННЫЙ СОЮЗ

ПРИЛОЖЕНИЕ

К СЕРТИФИКАТУ СООТВЕТСТВИЯ №ТС RU C-DE.МЮ62.В.05836

Серия RU № 0472417

3. Оборудование соответствует требованиям:

ТР ТС 012/2011	Технический регламент Таможенного союза «О безопасности оборудования для работы во взрывоопасных средах»;
ГОСТ 31610.0-2012	Электрооборудование для взрывоопасных газовых сред. Часть 0. Общие требования;
ГОСТ 31610.11-2012	Электрооборудование для взрывоопасных газовых сред. Часть 11. Искробезопасная электрическая цепь «i»;
ГОСТ 31610.15-2012	Электрооборудование для взрывоопасных газовых сред. Часть 15. Конструкция, испытания и маркировка электрооборудования с видом защиты «n»;
ГОСТ Р МЭК 60079-31-2010	Взрывоопасные среды. Часть 31. Оборудование с видом взрывозащиты от воспламенения пыли «t».

4. Маркировка

Маркировка, наносимая на электрооборудование, должна включать следующие данные:

4.1 наименование предприятия-изготовителя или его зарегистрированный товарный знак;
4.2 обозначение типа оборудования;
4.3 порядковый номер по системе нумерации предприятия-изготовителя;
4.4 маркировку взрывозащиты см. п. 2 «Основные технические данные»;
4.5 наименование или знак органа по сертификации и номер сертификата соответствия;
4.6 предупредительные надписи;
4.7 единый знак ЕАС обращения продукции на рынке государств - членов Таможенного союза;
4.8 специальный знак взрывобезопасности Ex в соответствии с ТР ТС 012/2011;
4.9 Другие данные, которые должен отразить изготовитель, если это требуется технической документацией (диапазон температур окружающей среды, степень защиты оболочки и т.д.).

5. Специальные условия применения

Знак X, стоящий после Ex-маркировки, означает, что при эксплуатации необходимо соблюдать следующие специальные условия:
- для подключения гибкого вывода датчиков во взрывоопасной зоне должны применяться сертифицированные взрывозащищенные коробки;
- электрические параметры питания датчиков не должны превышать значений, приведенных в разделе 2;
- для оборудования предназначенного для установки во взрывоопасные пылевые зоны необходимо применять меры, препятствующие накоплению электростатического заряда.

М.П.

Орган по сертификации продукции ООО "ПРОММАШ ТЕСТ" ЕАС для сертификатов РОСС RU.0001.11МК62

Руководитель (уполномоченное лицо) органа по сертификации	подпись	Иван Викторович Модянов инициалы, фамилия
Эксперт-аудитор (эксперт)	подпись	Анатолий Владимирович Ивочкин инициалы, фамилия

АО «ОПЦИОН», Москва, 2016, «Б» лицензия № 05-05-09/003 ФНС РФ, тел. (495) 726 4742, www.opcion.ru

14.12 DE.C.28.001.A No. 70234

ФЕДЕРАЛЬНОЕ АГЕНТСТВО
ПО ТЕХНИЧЕСКОМУ РЕГУЛИРОВАНИЮ И МЕТРОЛОГИИ

СВИДЕТЕЛЬСТВО

об утверждении типа средств измерений

DE.C.28.001.A № 70234

Срок действия до 15 июня 2023 г.

НАИМЕНОВАНИЕ ТИПА СРЕДСТВ ИЗМЕРЕНИЙ
Датчики весоизмерительные PR 6261

ИЗГОТОВИТЕЛЬ
Фирма "Minebea Intec GmbH", Германия

РЕГИСТРАЦИОННЫЙ № **71513-18**

ДОКУМЕНТ НА ПОВЕРКУ
ГОСТ 8.631-2013

ИНТЕРВАЛ МЕЖДУ ПОВЕРКАМИ **1 год**

Тип средств измерений утвержден приказом Федерального агентства по техническому регулированию и метрологии от **15 июня 2018 г. № 1211**

Описание типа средств измерений является обязательным приложением к настоящему свидетельству.

Заместитель Руководителя
Федерального агентства С.С.Голубев

«22» 06 2018 г.

Серия СИ № 042220

ФЕДЕРАЛЬНОЕ АГЕНТСТВО
ПО ТЕХНИЧЕСКОМУ РЕГУЛИРОВАНИЮ И МЕТРОЛОГИИ

РОССТАНДАРТ

**Федеральное государственное
унитарное предприятие «Всероссийский
научно-исследовательский институт метрологии им. Д.И.Менделеева»**

ФГУП «ВНИИМ им. Д.И.Менделеева»

190005, Санкт-Петербург, Московский пр., 19 Тел. (812) 251-76-01, факс (812) 713-01-14
e-mail: info@vniim.ru, http://www.vniim.ru ОКПО 02566450, ОГРН 1027810219007 ИНН/КПП 7809022120/783901001

Регистрационный номер аттестата аккредитации RA.RU.311541

АКТ

испытаний в целях утверждения типа датчиков весоизмерительных PR 6261, представленных фирмой «Minebea Intec GmbH», Германия

1. ФГУП «ВНИИМ им. Д.И. Менделеева» провел испытания в целях утверждения типа датчиков весоизмерительных PR 6261, изготовленных фирмой «Minebea Intec GmbH», Германия.

Испытания проведены в период с 11.09.2017 г. по 15.11.2017 г. на основании заявки фирмы «Minebea Intec GmbH», Германия, исх. № б/н от 22.08.2017 г.

Испытания проводились ФГУП «ВНИИМ им. Д.И. Менделеева», г. Санкт-Петербург.

2. ФГУП «ВНИИМ им. Д.И. Менделеева» были представлены два образца датчиков весоизмерительных PR 6261/500kg C3 (зав. № 3035659015) и PR 6261/2t C3 (зав. № 3035658751).

3. ФГУП «ВНИИМ им. Д.И. Менделеева» провел испытания датчиков весоизмерительных PR 6261 в соответствии с программой испытаний «Датчики весоизмерительные PR 6261. Программа испытаний в целях утверждения типа», утвержденной ФГУП «ВНИИМ им. Д.И. Менделеева» 11.09.2017 г.

4. Результаты испытаний положительные.

5. В результате проведенных испытаний для датчиков весоизмерительных PR 6261:

5.1. Установлены следующие метрологические и технические характеристики:

Таблица 1 - Метрологические характеристики

Наименование характеристики	Значение
Класс точности по ГОСТ 8.631-2013	C
Максимальное число поверочных интервалов, $n_{max} = E_{max} / v$	3000
Максимальная нагрузка, E_{max}, кг	125, 250, 500, 1000, 2000, 3000, 4000
Минимальная нагрузка, E_{min}, кг	0
Минимальный поверочный интервал, v_{min}, кг	E_{max} /14000
Доля от пределов допускаемой погрешности весов, p_{LC}	0,7
Значение поверочного интервала v, кг	E_{max}/n_{max}
Относительный выходной сигнал при E_{max}, мВ/В	2,0
Значение входного сопротивления датчиков, Ом	1080±10
Значение выходного сопротивления датчиков, Ом	1010±1
Предельные значения температуры, °C	от -10 до +40
Обозначение по влажности	CH

1

Приложение к свидетельству № **70234** Лист № 1
об утверждении типа средств измерений Всего листов 4

ОПИСАНИЕ ТИПА СРЕДСТВА ИЗМЕРЕНИЙ

Датчики весоизмерительные PR 6261

Назначение средства измерений

Датчики весоизмерительные PR 6261 (далее - датчики) предназначены для измерений и преобразования воздействующей на датчик силы тяжести взвешиваемого объекта в аналоговый нормированный электрический измерительный сигнал.

Описание средства измерений

Принцип действия датчиков основан на изменении электрического сопротивления тензорезисторов, соединенных в мостовую схему, при их деформации, возникающей в местах наклейки тензорезисторов к упругому элементу датчика, под действием прилагаемой нагрузки. Изменение электрического сопротивления вызывает разбаланс мостовой схемы и появление в диагонали моста электрического сигнала, изменяющегося пропорционально нагрузке.

Датчики состоят из упругого элемента, кабеля питания и измерения, тензорезисторов на клеевой основе, соединенных по полной мостовой электрической схеме, и элементов герметизации. Места наклейки тензорезисторов и расположения элементов термокомпенсации и нормирования в датчиках находятся во внутренней полости упругого элемента и защищены крышками и герметиком.

Модификации датчиков отличаются пределами допускаемой погрешности и максимальной нагрузкой.

Пломбирование датчиков весоизмерительных PR 6261 не предусмотрено.

Рисунок 1 - Внешний вид датчика весоизмерительного PR6261

Лист № 2
Всего листов 4

Маркировка датчиков производится на фирменной наклейке или непосредственно на корпусе датчика (рисунок 2), на которой нанесены:

- торговая марка изготовителя;
- обозначение весоизмерительного датчика;
- серийный номер;
- максимальное значение напряжения питания U_{max};
- максимальная нагрузка E_{max};
- номинальный выходной сигнал C_n;
- длина кабеля;
- год выпуска датчика;
- знак утверждения типа.

Рисунок 2 - Маркировка датчиков

Программное обеспечение
отсутствует.

Метрологические и технические характеристики

Таблица 1 - Метрологические характеристики

Наименование характеристики	Значение
Класс точности по ГОСТ 8.631-2013	C
Максимальное число поверочных интервалов, $n_{max} = E_{max} / v$	3000
Максимальная нагрузка, E_{max}, кг	125, 250, 500, 1000, 2000, 3000, 4000
Минимальная нагрузка, E_{min}, кг	0
Минимальный поверочный интервал, v_{min}, кг	E_{max} /14000
Доля от пределов допускаемой погрешности весов, p_{LC}	0,7
Значение поверочного интервала v, кг	E_{max}/n_{max}
Относительный выходной сигнал при E_{max}, мВ/В	2,0
Значение входного сопротивления датчиков, Ом	1080±10
Значение выходного сопротивления датчиков, Ом	1010±1
Предельные значения температуры, °C	от -10 до +40
Обозначение по влажности	CH

Лист № 3
Всего листов 4

Таблица 2 - Основные технические характеристики

Наименование характеристики	Значение
Габаритные размеры средства измерений, мм, не более - высота - диаметр	 42 95
Масса, кг, не более	1,7
Напряжение питания постоянного тока, В	от 4 до 32
Средний срок службы, лет	10
Вероятность безотказной работы за 2000 ч	0,9
Маркировка взрывозащиты	0Ex ia IIC T6 2Ex nA IIC T6 X Ex tc IIIC T85°C X Ex ta IIIC T160°C X

Таблица 3 - Пределы допускаемых погрешностей датчиков

Интервалы измерений	Пределы допускаемой погрешности mpe
до 500v включ.	±0,35v
св. 500v до 2000v включ.	±0,70v
св. 2000v	±1,05v

Знак утверждения типа
наносится типографским способом на титульный лист паспорта и на маркировочную табличку на корпусе датчика.

Комплектность средства измерений

Таблица 4 - Комплектность средства измерений

Наименование	Обозначение	Количество
Датчик весоизмерительный	PR 6261	1 шт.
Паспорт	-	1 экз.

Поверка
осуществляется по документу Приложение ДА «Методика поверки» ГОСТ 8.631-2013.

Основные средства поверки:

рабочие эталоны 1-го разряда по ГОСТ 8.640-2014 с пределами допускаемых значений доверительных границ относительной погрешности δ = 0,01 %.

Допускается применение аналогичных средств поверки, обеспечивающих определение метрологических характеристик поверяемых СИ с требуемой точностью.

Знак поверки наносится в паспорт.

Сведения о методиках (методах) измерений
приведены в эксплуатационном документе.

Нормативные и технические документы, устанавливающие требования к датчикам весоизмерительным PR 6261

ГОСТ 8.631-2013 ГСИ. Датчики весоизмерительные. Общие технические требования. Методы испытаний

ГОСТ 8.021-2015 ГСИ. Государственная поверочная схема для средств измерений массы

Техническая документация фирмы «Minebea Intec GmbH», Германия

Лист № 4
Всего листов 4

Изготовитель

Фирма «Minebea Intec GmbH», Германия
Адрес: Meiendorfer Strasse 205A, 22145 Hamburg, Germany
Телефон: +49.40.67960-238, факс: +49.40.67960-500
E-mail: juergen.stolte@minebea-intec.com

Испытательный центр

Федеральное государственное унитарное предприятие «Всероссийский научно-исследовательский институт метрологии им. Д.И. Менделеева»
Адрес: 190005, г. Санкт-Петербург, Московский пр., 19
Телефон: (812) 251-76-01, факс: (812) 713-01-14
Web-сайт: www.vniim.ru
E-mail: info@vniim.ru
Аттестат аккредитации ФГУП «ВНИИМ им. Д.И. Менделеева» по проведению испытаний средств измерений в целях утверждения типа № RA.RU.311541 от 23.03.2016 г.

Заместитель
Руководителя Федерального
агентства по техническому
регулированию и метрологии С.С. Голубев

М.п. «22» 06 2018 г.

14.13 DE-15-PC-PTB009

Physikalisch-Technische Bundesanstalt
Braunschweig und Berlin
Nationales Metrologieinstitut

Baueinheiten-Zertifikat

Parts Certificate

Ausgestellt für: *Issued to:*	Sartorius Mechatronics T & H GmbH Meiendorfer Str. 205 22145 Hamburg
gemäß: *In accordance with:*	WELMEC 8.8 (2011-05) *WELMEC Guide 8.8 (2011-05)*
Baueinheiten: *Type of parts:*	Wägezelle *Load cell*
Typbezeichnung: *Type designation:*	PR 6261
Nr. der Bescheinigung: *Certificate No.:*	DE-15-PC-PTB009
Anzahl der Seiten: *Number of pages:*	6
Geschäftszeichen: *Reference No.:*	PTB-1.12-4076357

Zertifizierung:
Certification:

Braunschweig, 27.10.2015

Bewertung:
Evaluation:

Im Auftrag
On behalf of PTB
Dr. Oliver Mack

Siegel
Seal

PHYSIKALISCH-TECHNISCHE BUNDESANSTALT 78

Im Auftrag
On behalf of PTB
Jessica Denzel

R3-0035965

Zertifikate ohne Unterschrift und Siegel haben keine Gültigkeit. Dieses Zertifikat darf nur unverändert weiterverbreitet werden. Auszüge bedürfen der Genehmigung der Physikalisch-Technischen Bundesanstalt.

Certificates without signature and seal are not valid. This certificate may not be reproduced other than in full. Extracts may be taken only with the permission of the Physikalisch-Technische Bundesanstalt.

Physikalisch-Technische Bundesanstalt
Braunschweig und Berlin
Nationales Metrologieinstitut

Seite 2 des Baueinheiten-Zertifikats DE-15-PC-PTB009 vom 27.10.2015
Page 2 of the Parts Certificate DE-15-PC-PTB009 dated 27.10.2015

Zertifikatsgeschichte / *Certificate history*

Zertifikats-Ausgabe *Certificate release*	Datum *Date*	Wesentliche Änderungen *Essential changes*
DE-15-PC-PTB009	27.10.2015	Erstbescheinigung / *primary certificate*

Vorbemerkung / *Preliminary remark*

Dieses Zertifikat ist in Deutsch geschrieben. Im Fall von Unstimmigkeiten zwischen der deutschsprachigen Version und der englischen Übersetzung gilt die deutsche Version.

This certificate is written in German. In case of any conflict between the German language version and the English translation of it, the German version shall prevail.

1. Technische Daten / *Technical Data*

Die metrologischen Kenndaten der Wägezellen Typ PR 6261 sind in Tabelle 1 angegeben. Weitere technische Daten sind dem Datenblatt des Herstellers, Abschnitt 6 dieser Anlage, zu entnehmen.

The metrological characteristics of the load cells type PR 6261 are listed in Table 1. Further technical data are listed in the data sheet of the manufacturer in section 6 of this annex.

Tabelle 1: Wesentliche Kenndaten / *Table 1: Essential data*

Genauigkeitsklasse *Accuracy class*			C3
Max. zul. Anzahl d. Teilungswerte *Maximum number of verification intervals*	n_{LC}		3000
Kennwert *Rated output*		mV/V	2
Nennlast *Nominal capacity*	E_{max}	kg	250 / 500 / 1000
Mindestteilungswert d. Wägezelle *Minimum load cell verification interval*	v_{min} = (E_{max} / Y)		E_{max} / 14000

Vorlast: / *Dead load:* 0%·E_{max}; Grenzlast: / *Safe overload:* 150%·E_{max}; Eingangswiderstand: / *Input impedance:* 1080 Ω

2. Prüfungen / *Tests*

Die Richtigkeitsprüfungen, die Untersuchungen der Stabilität des Nullsignals, der Reproduzierbarkeit und des Kriechverhaltens im Temperaturbereich von -10°C bis +40°C sowie die barometrischen Prüfungen und die Prüfung der Messbeständigkeit bei zyklischer Feuchte-Wärme wurden nach OIML R60 (2000) mit dem Fehleranteil p_{LC} = 0,7 entsprechend Tabelle 2 ausgeführt.

The determination of the load cell error, the stability of the dead load output, repeatability and creep in the temperature range of –10°C to +40°C as well as the tests of barometric pressure effects and the determination of the effects of cyclic damp heat have been performed according to OIML R60 (2000) with fraction p_{LC} = 0.7 as shown in Table 2.

Physikalisch-Technische Bundesanstalt
Braunschweig und Berlin
Nationales Metrologieinstitut

Seite 3 des Baueinheiten-Zertifikats DE-15-PC-PTB009 vom 27.10.2015
Page 3 of the Parts Certificate DE-15-PC-PTB009 dated 27.10.2015

Tabelle 2: Ausgeführte Prüfungen / *Table 2: Tests performed*

Prüfung / *Test*	R60 (2000)		geprüfte Muster *tested samples*	Ergebnis *result*
Temperaturprüfung und Wiederholbarkeit bei *Temperature test and repeatability at* (20°C / 40°C / -10°C / 20°C)	5.1.1; 5.4	A.4.1	250 kg	+
Temperatureinfluss auf Vorlastsignal bei *Temp. effect on min. dead load output at* (20°C / 40°C / -10°C / 20°C)	5.5.1.3	A.4.1.16	250 kg	+
Kriechprüfung bei *Creep test at* (20°C / 40°C / -10°C / 20°C)	5.3.1	A.4.2	250 kg	+
Mindestvorlastsignalrückkehr bei *Minimum dead load output return at* (20°C / 40°C / -10°C / 20°C)	5.3.2	A.4.3	250 kg	+
Auswirkung des Luftdrucks bei Umgebungstemperatur *Barometric pressure effects at room temperature*	5.5.2	A.4.4	250 kg	+
Feuchteprüfung, zyklisch, Kennzeichnung CH oder (ohne) *Damp heat test , cyclic, marked CH or (not marked)*	5.5.3.1	A.4.5	250 kg	+

Die folgenden Messergebnisse sind in der PTB hinterlegt: / *Following test results are kept at PTB:*

- Test Report No. PTB 1.12-4076357-1, 28. September 2015:
  E_{max}=250 kg; SN: 552342; C3; Y=14000; Z=3000;

3. Beschreibung der Wägezelle / *Description of the load cell*

Die Wägezellen der Baureihe PR 6261 sind Drucklast-Wägezellen. Sie sind aus rostfreiem Stahl hergestellt, die DMS-Applikation ist hermetisch gekapselt. Die wesentlichen Betriebsdaten sind dem Datenblatt in Abschnitt 6 dieser Anlage zu entnehmen.

The load cells of the series PR 6261 are compression load cells. They are made of stainless steel, the strain gauge application is hermetically sealed. Further essential characteristics are given in the data sheet, see section 6 of this annex.

Bild 1: Wägezelle Typ PR 6261 / 250 kg
Figure 1: Load cell type PR 6261 / 250 kg

Physikalisch-Technische Bundesanstalt
Braunschweig und Berlin
Nationales Metrologieinstitut

Seite 4 des Baueinheiten-Zertifikats DE-15-PC-PTB009 vom 27.10.2015
Page 4 of the Parts Certificate DE-15-PC-PTB009 dated 27.10.2015

Die Kennzeichnung auf dem Typenschild erfolgt entsprechend dem Beispiel:
The type designation is indicated as follows in the example on the name plate:

PR 6261 / 250 kg C3

- C3 — für Waagen der Klasse (III), max. zul. Anzahl der Teilungswerte in n_{LC} / 1000 — *for weighing instruments class (III), max. number of load cell intervals in n_{LC} / 1000*
- 250 kg — Nennlast E_{max} — *maximum capacity E_{max}*
- PR 6261 — Wägezellen Typ — *load cell type*

4. Dokumentation / *Documentation*

Die zu diesem Zertifikat gehörenden technischen Unterlagen des Zertifikatsinhabers sind im Zertifizierungs-Dokumentensatz ZDS-DE-15-PC-PTB009 der benannten Stelle hinterlegt. Ein von der benannten Stelle gestempeltes Inhaltsverzeichnis dieses Zertifizierungs-Dokumentensatzes wurde dem Zertifikatsinhaber zugeschickt.

The documents appending to this certificate are deposited at the notified body in the set of certification documentation No. ZDS-DE-15-PC-PTB009. The index of the set of certification documentation has been stamped by the notified body and it has been sent to the owner of the certificate.

5. Weitere Informationen / *Further information*

Fertigungsverfahren, Werkstoffe und Abdichtungen müssen den vorgestellten Mustern und der in der PTB hinterlegten Dokumentation entsprechen; Änderungen sind nur mit Zustimmung der PTB erlaubt.

Die im Datenblatt hinsichtlich Linearität, Umkehrspanne und Temperaturgang angegebenen Fehlergrenzen begrenzen maximal mögliche Einzelfehler eines Musters; der für jedes Muster zulässige Gesamtfehler aus diesen Größen ist durch die Fehlergrenze nach OIML R60 Nr. 5.1 (Hüllkurve) vorgegeben.

Die technischen Daten sowie die Abmessungen der Wägezellen sind im Abschnitt 6 in dieser Anlage enthalten und müssen beachtet werden. Die Wägezellen können nach DIN EN 45501 Nr. 4.12 auch in Waagen der Klasse (IIII) eingesetzt werden.

The manufacturing process, material and sealing of the produced load cells have to be in accordance with the tested patterns; changes are only allowed with the permission of the PTB.

The typical errors related to linearity, hysteresis and temperature coefficient as indicated in the data sheet point out possible single errors of a pattern; however, the overall error of each pattern is determined by the maximum permissible error according to OIML R60 No 5.1.

The technical data, the dimensions of the load cell are given in section 6 of this annex, have to be complied with. The load cells also can be used in weighing instruments of class (IIII) in accordance with DIN EN 45501 No. 4.12.

Physikalisch-Technische Bundesanstalt
Braunschweig und Berlin
Nationales Metrologieinstitut

Seite 5 des Baueinheiten-Zertifikats DE-15-PC-PTB009 vom 27.10.2015
Page 5 of the Parts Certificate DE-15-PC-PTB009 dated 27.10.2015

6. Datenblatt und Abmessungen / *Data sheet and dimensions*

Kenndaten der Wägezellen-Familie / *Specifications of the Load Cell Family*

Genauigkeitsklasse nach OIML R60 *Accuracy class acc. to OIML R60*			C3
Anzahl der Teilungswerte *Max. number of load cell verification intervals*	n_{LC}		3000
Mindestvorlast / *Minimum dead load*	E_{min}	%·E_{max}	0
Nennkennwert / *Rated output*	RO	mV/V	2
Nennlast / *Nominal capacity*	E_{max}	kg	250, 500, 1000
Gebrauchslast / *Maximum usable load*	E_u	%·E_{max}	150
Bruchlast / *Ultimate load*	E_d	%·E_{max}	> 300
Mindestteilungswert d. Wägezelle *Min. load cell verification interval*	v_{min}		E_{max} / 14000
Vorlastsignalrückkehr *Minimum dead load output return (MDLOR)*	DR		½·E_{max} / 3000
Relative Kennwertabweichung *Tolerance on rated output*	d_c	%·RO	< 0,07
Nullsignal / *Zero signal*	S_{min}	%·RO	0 ... +1,5
Reproduzierbarkeit / *Repeatability error*	ε_R	%·RO	< 0,015
Kriechen (30 Min) / *Creep (30 min)*	d_{cr}	%·RO	< 0,015
Relative Linearitätsabweichung *Non-Linearity*	d_{lin}	%·RO	< 0,01
Relative Umkehrspanne *Hysteresis error*	d_{hy}	%·RO	< 0,0165
Temperaturkoeffizient d. Mindestvorlastsignal *Temperature coefficient of Minimum dead load output*	TC_{Smin}	%·RO / 10 K	< 0,01
Temperaturkoeffizient d. Kennwertes *Temperature coefficient of rated output*	TC_C	%·RO / 10 K	< 0,01
Eingangswiderstand / *Input resistance*	R_{LC}	Ω	1080 ± 10
Ausgangswiderstand / *Output resistance*	R_o	Ω	1010 ± 1
Isolationswiderstand / *Insulation resistance*		MΩ	> 5000 (100 VDC)
Nennbereich der Speisespannung *Nominal range of excitation voltage*	B_U	V	4...24
Maximale Speisespannung *Excitation voltage, maximum*	U_{max}	V	32 DC
Nenntemperaturbereich *Nominal temperature range*	B_T	°C	- 10 ... + 40
Gebrauchstemperaturbereich *Operating temperature range*	B_{Tu}	°C	- 40 ... + 95
Lagertemperaturbereich *Storage temperature range*	B_{Tl}	°C	- 40 ... + 95
Grenzexzentrizität *Eccentricity limit*	S_{ex}	mm	± 2,5
Nennmessweg bei E_{max}, ca. *Deflection at E_{max}, approx.*	s_{nom}	mm	< 0,15

Physikalisch-Technische Bundesanstalt
Braunschweig und Berlin
Nationales Metrologieinstitut

Seite 6 des Baueinheiten-Zertifikats DE-15-PC-PTB009 vom 27.10.2015
Page 6 of the Parts Certificate DE-15-PC-PTB009 dated 27.10.2015

Kabelanschluss

Die Wägezelle hat ein 4-adriges, abgeschirmtes Kabel.

Wiring

The load cell is provided with a shielded 4 conductor cable.

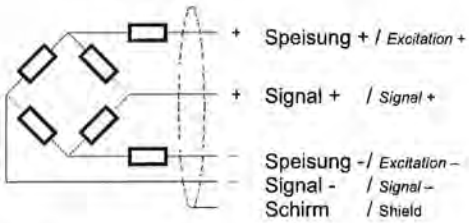

Anschlussbelegung / *Connections*

Anschlussbelegung *Connections*		4-Leiter *4-wires*
Speisung / *Excitation*	+	rot / *red*
Speisung / *Excitation*	–	blau / *blue*
Signal / *Signal*	+	grün / *green*
Signal / *Signal*	–	grau / *grey*
Schirm / *Shield*		Transparent, Schwarz oder gelb / *transparent, black or yellow*
Kabellänge / *Cable length*		auf dem Typenschild der Wägezelle / *on the name plate of the load cell*
Durchmesser / *Diameter*		5 mm

Wägezellen-Abmessungen in mm / *Load cell dimensions in mm*

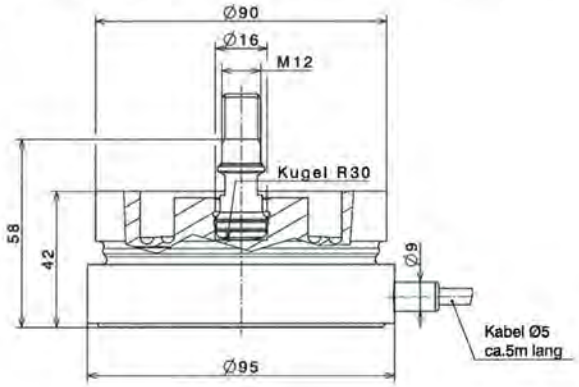

Bild 2: Abmessungen der Wägezelle Typ PR 6261 / *Figure 2: Dimensions of the load cell type PR* 6261

Physikalisch-Technische Bundesanstalt
Konformitätsbewertungsstelle *(Conformity Assessment Body)*

Bundesallee 100
38116 Braunschweig
DEUTSCHLAND

Abbestraße 2-12
10587 Berlin
DEUTSCHLAND

14.14 R60/2000-NL1-17.41

OIML Certificate of Conformity

OIML Member State
The Netherlands

Number R60/2000-NL1-17.41
Project number 1900903
Page 1 of 2

Issuing authority	NMi Certin B.V. Person responsible: C. Oosterman
Applicant and Manufacturer	Minebea Intec GmbH Meiendorfer Strasse 205 A D-22145 Hamburg Germany
Identification of the certified type	A **compression load cell**, with strain gauges. Type : PR 6261
Characteristics	See next page

This Certificate attests the conformity of the above identified Type (represented by the sample(s) identified in the OIML Test Report) with the requirements of the following Recommendation of the International Organization of Legal Metrology (OIML):

OIML R60 - Edition 2000 (E) for accuracy class C

This Certificate relates only to the metrological and technical characteristics of the type of measuring instrument covered by the relevant OIML International Recommendation above-identified.
This Certificate does not bestow any form of legal international approval.

Important note: Apart from the mention of the Certificate's reference number and the name of the OIML Member State in which the Certificate was issued, partial quotation of the Certificate and of the associated OIML Test Report(s) is not permitted, although either may be reproduced in full.

Issuing Authority **NMi Certin B.V., OIML Issuing Authority NL1**
2 May 2017

C. Oosterman
Head Certification Board

NMi Certin B.V.
Hugo de Grootplein 1
3314 EG Dordrecht
the Netherlands
T +31 78 6332332
certin@nmi.nl
www.nmi.nl

This document is issued under the provision that no liability is accepted and that the applicant shall indemnify third-party liability.

The notification of NMi Certin B.V. as Issuing Authority can be verified at www.oiml.org

OIML Certificate of Conformity

OIML Member State
The Netherlands

Number R60/2000-NL1-17.41
Project number 1900903
Page 2 of 2

The conformity was established by the results of tests and examinations provided in the associated OIML Test Report(s):

- No. NMi-1900903-01 dated 28 April 2017 that includes 51 pages;
- No. NMi-1900903-02 dated 28 April 2017 that includes 46 pages.

Characteristics of the load cell:

Maximum capacity (E_{max})	125 kg up to and including 4000 kg
Minimum dead load	0 kg
Accuracy Class	C
Rated Output	2,0 mV/V
Maximum number of load cell intervals (n)	3000
Ratio of minimum LC Verification interval $Y = E_{max} / v_{min}$	14000
Ratio of minimum dead load output return $Z = E_{max} / (2 * DR)$	3000
Input impedance	1080 Ω ± 10 Ω
Temperature range	-10 °C / + 40 °C
Fraction p_{LC}	0,7
Humidity Class	CH
Safe overload	150 % of E_{max}
Output impedance	1010 Ω ± 1 Ω
Recommended excitation	10 V AC / DC
Excitation maximum	24 V AC / DC
Transducer material	Stainless steel
Atmospheric protection	Hermetically welded

The characteristics for n_{max} and Y can be reduced separately.

Each produced load cell is provided with an accompanying document with information about its characteristics.

The above identified Type (represented by the sample(s) identified in the OIML Test Report) have been found to comply with the additional national requirements established by the United States of America (NIST Handbook 44 and NCWM Publication 14), included in the MAA Declaration of Mutual Confidence:

- R 60 DoMC-01 rev.0, Additional requirements from the United States;
- R 60 DoMC-02 rev.0, Additional requirements from the United States.

14.15 TC11066

Test Certificate
Parts Certificate

Number **TC11066** revision 0
Project number 1900903
Page 1 of 1

Issued by	NMi Certin B.V.
In accordance with	WELMEC 8.8 Issue 2, WELMEC 2.4 Issue 2, OIML R 60 (2000), EN 45501:2015.
Producer	Minebea Intec GmbH Meiendorfer Strasse 205 A D-22145 Hamburg Germany
Measuring instrument	A **compression load cell**, with strain gauges, tested as a part of a weighing instrument.

Brand : Minebea Intec GmbH

Designation : PR 6261

Further properties are described in the annexes:
- Description TC11066 revision 0;
- Documentation folder TC11066-1.

An overview of performed tests is given in the annex:
- Description TC11066 revision 0.

Issuing Authority **NMi Certin B.V.**
2 May 2017

C. Oosterman
Head Certification Board

NMi Certin B.V.
Hugo de Grootplein 1
3314 EG Dordrecht
The Netherlands
T +31 78 6332332
certin@nmi.nl
www.nmi.nl

This document is issued under the provision that no liability is accepted and that the producer shall indemnify third-party liability.

Reproduction of the complete document only is permitted

INSPECTION
RvA I 122

101

Description

Number **TC11066** revision 0
Project number 1900903
Page 1 of 2

1 General information about the load cell

All properties of the load cell, whether mentioned or not, shall not be in conflict with the standards mentioned in this certificate.

This certificate is the positive result of the applied voluntary, modular approach, for a component of a measuring instrument, as described in WELMEC 8.8. The complete measuring system must be covered by an EC type-approval certificate, an EC-type examination certificate or an EU-type examination certificate.

1.1 Essential parts

Number	Pages	Description	Remark
11066/0-01	1	Load cell outline	Mechanical
11066/0-02	1	Electrical drawing	Electrical

Cable:
- If the load cell is provided with a 4-wire system:
  - The cable length is mentioned in the accompanying load cell document / on the label;
  - The cable length shall not be modified.
- If the load cell is provided with a 6-wire system (="Remote-sensing"):
  - The cable length is not limited.

The cable shall be a shielded cable, the shield is connected to the load cell.

1.2 Essential characteristics

Maximum capacity (E_{max})	125 kg up to and including 4000 kg
Minimum dead load	0 kg
Accuracy Class	C
Rated Output	2,0 mV/V
Maximum number of load cell intervals (n)	3000
Ratio of minimum LC Verification interval $Y = E_{max} / v_{min}$	14000
Ratio of minimum dead load output return $Z = E_{max} / (2 * DR)$	3000
Input impedance	1080 Ω ± 10 Ω
Temperature range	-10 °C / + 40 °C
Fraction p_{LC}	0,7
Humidity Class	CH
Safe overload	150 % of E_{max}

Description

Number **TC11066** revision 0
Project number 1900903
Page 2 of 2

Output impedance	1010 Ω ± 1 Ω
Recommended excitation	10 V AC / DC
Excitation maximum	24 V AC / DC
Transducer material	Stainless steel
Atmospheric protection	Hermetically welded

The characteristics for n_{max} and Y can be reduced separately.

Each produced load cell is provided with an accompanying document with information about its characteristics.

1.3 Essential shapes

Number	Pages	Description	Remark
11066/0-01	1	Load cell outline	Mechanical

The descriptive markings plate is secured against removal by sealing or will be destroyed when removed and contains at least the information and markings as described in OIML R 60 (2000) and:
- This certificate number TC11066 (in the countries where it is mandatory);
- Producers name or mark.

2 Seals

The connecting cable of the load cell or the junction box is provided with possibility to seal.

3 Conditions for conformity assessment

The compatibility of load cells and indicator is established by the manufacturer by means of the compatibility of modules form, contained in WELMEC 2, 2015 clause 10, at the time of putting into use.

Other parties may use this certificate without the written permission of the producer (WELMEC 8.8).

4 Reports

An overview of performed tests is given in the reports:
- No. NMi-1900903-01 dated 28 April 2017 that includes 51 pages;
- No. NMi-1900903-02 dated 28 April 2017 that includes 46 pages.

A report can be a test report, an evaluation report, a type evaluation report and/or a pattern evaluation report.

14.16 17-094

Certificate Number: 17-094
Page 1 of 2

NATIONAL TYPE EVALUATION PROGRAM

Certificate of Conformance

for Weighing and Measuring Devices

For:
Load Cell
Compression
Model: PR 6261 Series
n_{max}: 5000, Class III, Multiple Cell
10 000, Class IIIL, Multiple Cell
Capacity: 125 kg to 4000 kg
Accuracy Class: III/IIIL

Submitted By:
Minebea Intec GmbH
Meiendorfer Strasse 205 A
22145 Hamburg
Germany
Tel: +49.40.67960-238
Fax: +49.40.67960-500
Contact: Juergen Stolte
Email: juergen.stolte@minebea-intec.com
Web site: www.minebea-intec.com

Standard Features and Options

- The specific load cell models, capacities and v_{min} values covered by this Certificate are listed in the table on Page 2.
- Nominal Output: 2.0 mV/V
- Stainless Steel
- 4 Wire Design
- Minimum Dead Load: 0 kg

Temperature Range: -10 °C to 40 °C (14 °F to 104 °F)

This device was evaluated under the National Type Evaluation Program and was found to comply with the applicable technical requirements of "NIST Handbook 44: Specifications, Tolerances and Other Technical Requirements for Weighing and Measuring Devices." Evaluation results and device characteristics necessary for inspection and use in commerce are on the following pages.

James P. Cassidy Jr.
James Cassidy
Chairman, NCWM, Inc.

Kristin J Macey
Kristin Macey
Chairman, National Type Evaluation Program Committee
Issued: August 7, 2017

1135 M Street, Suite 110 / Lincoln, Nebraska 68508

The National Conference on Weights and Measures (NCWM) does not approve, recommend or endorse any proprietary product or material, either as a single item or as a class or group. Results shall not be used in advertising or sales promotion to indicate explicit or implicit endorsement of the product or material by the NCWM.

Certificate Number: 17-094
Page 2 of 2

Minebea Intec GmbH

Load Cell / PR 6261 Series

Application: The load cells may be used in multiple cell applications Class III and IIIL consistent with the model designations, number of scale divisions, and parameters specified in this certificate. Load cells of a given accuracy class may be used in applications with lower accuracy class requirements provided the number of scale divisions, the v_{min} value, and temperature range are suitable for the application. The manufacturer may market the load cell with fewer divisions (n_{max}) and with greater v_{min} values than those listed on the certificate. However, the load cells must be marked with the appropriate n_{max} and v_{min} for which the load cell may be used.

Specific Capacities and v_{min} Values:

Model	Capacity	v_{min}	
		Class III Multiple Cell, n = 5000	Class IIIL Multiple Cell, n = 10 000
PR 6261 Series	125 kg*	8.9 g	7.8 g
	250 kg	17.8 g	7.8 g
	500 kg	35.7 g	11.9 g
	1000 kg *	71.4 g	23.8 g
	2000 kg	142 g	47.6 g
* load cell tested	3000 kg	214 g	71.4 g
	4000 kg	285 g	95.2 g

Identification: A lasered identification label located on the cell, states manufacturer name, model, serial number, v_{min} and rated capacity. Other pertinent information will be specified on the Calibration Certificate accompanying the cell.

Test Conditions: A 125 kg and a 1000 kg capacity load cell were tested by the NMi Certain B.V. at The Netherlands facility. Testing was conducted in accordance with the OIML DoMC Mutual Acceptance Arrangement, signed by the NCWM as a utilizing participant for load cell testing. Testing was conducted using deadweights as the reference standard. The load cells were tested over a temperature range of -10 °C to 40 °C with tests run on each cell at each temperature. The temperature effect on zero was measured and a time dependence (creep) test was performed. The barometric pressure test to determine sensitivity of the load cell design to changes in barometric pressure was conducted. The data were analyzed for multiple load cell applications. OIML R60 selection criteria were used to determine cells tested.

Evaluated By: S.J. Koeman, M.M.J. Meijer (NMi)

Type Evaluation Criteria Used: NIST, Handbook 44: Specifications, Tolerances and Other Technical Requirements for Weighing and Measuring Devices, 2017. NCWM, Publication 14: Weighing Devices, 2017.

Conclusion: The results of the evaluation and information provided by the manufacturer indicate the device complies with applicable requirements.

Information Reviewed By: J. Truex (NCWM)

Example of Device:

14.17 10032

NEW YORK STATE OF OPPORTUNITY. | Agriculture and Markets

10B Airline Drive
Albany, New York 12235
800-554-4501
www.agriculture.ny.gov

Certificate of Approval

for Weighing and Measuring Devices

New York State Certificate Number: 10032
Effective Date: November 2, 2017

NTEP Certificate of Conformance Number: 17-094

For:
Load Cell
Compression
Model: PR 6261 Series
n_{max}: 5000, Class III, Multiple Cell
10 000, Class IIIL, Multiple Cell
Capacity: 125 kg to 4000 kg
Accuracy Class: III/IIIL

Submitted By:
Minebea Intec GmbH
Meiendorfer Strasse 205 A
22145 Hamburg
Germany
Tel: +49.40.67960-238
Fax: +49.40.67960-500
Contact: Juergen Stolte
Email: juergen.stolte@minebea-intec.com
Web site: www.minebea-intec.com

This certifies that the items specified in the above National Type Evaluation Program (NTEP) Certificate of Conformance are hereby approved for sale or use in the State of New York.

The NTEP Certificate of Conformance, as issued by the National Conference on Weights and Measures, is accepted under the terms of 1NYCRR Part 220.1. Evaluation results and device characteristics necessary for inspection and use in commerce are stated in the NTEP Certificate of Conformance. Copies of the NTEP Certificate of Conformance are available on request and are available for inspection at the Bureau's Metrology Office at 6 Harriman Campus Road, Albany, NY 12206.

Michael Sikula, Director
NYS Bureau of Weights and Measures

WM-23 (rev. 02/15) Duplicate Original NTEP

Published by
Minebea Intec GmbH | Meiendorfer Strasse 205 A | 22145 Hamburg, Germany
Phone: +49.40.67960.303 | Email: info@minebea-intec.com
www.minebea-intec.com

Minebea intec
The true measure