SIEMENS

SIPART

Electropneumatic positioners SIPART PS100

Compact Operating Instructions

Getting started 1

Introduction 2

Safety notes 3

Installing/mounting 4

Connecting 5

Commissioning 6

Local operation 7

Service and maintenance 8

Technical specifications 9

Product documentation and support A

6DR710. SIPART PS100 Polycarbonat
6DR711. SIPART PS100 Aluminum without window

05/2021
A5E50188940-AA

Legal information

Warning notice system

This manual contains notices you have to observe in order to ensure your personal safety, as well as to prevent damage to property. The notices referring to your personal safety are highlighted in the manual by a safety alert symbol, notices referring only to property damage have no safety alert symbol. These notices shown below are graded according to the degree of danger.

⚠ DANGER
indicates that death or severe personal injury **will** result if proper precautions are not taken.

⚠ WARNING
indicates that death or severe personal injury **may** result if proper precautions are not taken.

⚠ CAUTION
indicates that minor personal injury can result if proper precautions are not taken.

NOTICE
indicates that property damage can result if proper precautions are not taken.

If more than one degree of danger is present, the warning notice representing the highest degree of danger will be used. A notice warning of injury to persons with a safety alert symbol may also include a warning relating to property damage.

Qualified Personnel

The product/system described in this documentation may be operated only by **personnel qualified** for the specific task in accordance with the relevant documentation, in particular its warning notices and safety instructions. Qualified personnel are those who, based on their training and experience, are capable of identifying risks and avoiding potential hazards when working with these products/systems.

Proper use of Siemens products

Note the following:

⚠ WARNING
Siemens products may only be used for the applications described in the catalog and in the relevant technical documentation. If products and components from other manufacturers are used, these must be recommended or approved by Siemens. Proper transport, storage, installation, assembly, commissioning, operation and maintenance are required to ensure that the products operate safely and without any problems. The permissible ambient conditions must be complied with. The information in the relevant documentation must be observed.

Trademarks

All names identified by ® are registered trademarks of Siemens AG. The remaining trademarks in this publication may be trademarks whose use by third parties for their own purposes could violate the rights of the owner.

Disclaimer of Liability

We have reviewed the contents of this publication to ensure consistency with the hardware and software described. Since variance cannot be precluded entirely, we cannot guarantee full consistency. However, the information in this publication is reviewed regularly and any necessary corrections are included in subsequent editions.

Siemens AG
Digital Industries
Postfach 48 48
90026 NÜRNBERG
GERMANY

Document order number: A5E50188940
Ⓟ 05/2021 Subject to change

Copyright © Siemens AG 2021.
All rights reserved

Table of contents

1 Getting started 5

2 Introduction 7

2.1 Purpose of this documentation 7

2.2 Document history 7

2.3 Product compatibility 7

2.4 Designated use 7

2.5 Checking the consignment 7

2.6 Design of the nameplate 8

2.7 Security information 9

2.8 Transportation and storage 10

2.9 Notes on warranty 10

3 Safety notes 11

3.1 Prerequisites for safe use 11
3.1.1 Warning symbols on the device 11
3.1.2 Laws and directives 11
3.1.3 Conformity with European directives 12
3.1.4 Product approval and UL compliance 12

3.2 Use in hazardous areas 13

4 Installing/mounting 15

4.1 Basic safety notes 15
4.1.1 Proper mounting 16

4.2 Mounting to linear actuator 17

4.3 Mounting to part-turn actuator 20

5 Connecting 25

5.1 Basic safety notes 25

5.2 Grounding 29

5.3 Electrical connection 29

5.4 Pneumatic connection 29
5.4.1 Structure of pneumatic connection 30
5.4.2 Behavior in case of failure of the electrical auxiliary power and/or the supply pressure PZ 31

6 Commissioning 33

6.1 Basic safety notes 33

6.2 Initialize in "NO INIT" operating mode 35

7 Local operation ... 37

8 Service and maintenance ... 39

8.1 Basic safety notes ... 39
8.1.1 Maintenance ... 39

8.2 Cleaning ... 39

8.3 Maintenance and repair work ... 40

8.4 Return procedure ... 41

8.5 Disposal ... 41

9 Technical specifications ... 43

9.1 Input ... 43

9.2 Output ... 43

9.3 Rated conditions ... 44

9.4 Pneumatic data ... 44

9.5 Mechanical construction ... 45

9.6 Controller ... 46

9.7 Explosion protection ... 47
9.7.1 Type key ... 47
9.7.2 Markings for explosion protection ... 48
9.7.3 Ambient temperature ... 49
9.7.4 Electrical specifications ... 49

9.8 Mobile IQ app and AW050 Bluetooth adapter ... 49
9.8.1 SITRANS mobile IQ ... 49
9.8.2 SITRANS AW050 Bluetooth adapter ... 50

A Product documentation and support ... 51

A.1 Product documentation ... 51

A.2 Technical support ... 52

Index ... 53

Getting started

1

Requirement

You have read the following safety instructions:

- General safety notes (Page 11)
- Basic safety notes: Installing/mounting (Page 15)
- Basic safety notes: Connecting (Page 25)
- Basic safety notes: Commissioning (Page 33)

Read the entire document for information on getting the best performance from your device.

Procedure

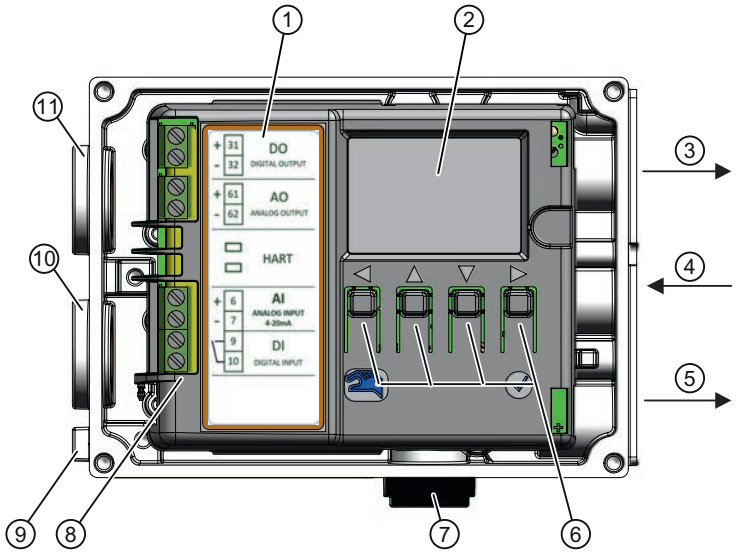

①	Circuit diagram on module cover	⑦	Exhaust air outlet with a sound absorber
②	Display	⑧	Connecting terminals
③	Output: Actuating pressure Y1	⑨	Grounding, thread M4
④	Input: Supply pressure PZ	⑩	Lower cable gland, thread M20x1.5
⑤	Output: Actuating pressure Y2 for double-acting actuators	⑪	Upper cable gland, thread M20x1.5
⑥	Buttons		

Figure 1-1 Overview of device components, open cover

1. Mount the positioner.
   Mounting to linear actuator (Page 17)
   Mounting to part-turn actuator (Page 20)
2. Connect the positioner.
   Electrical connection (Page 29)
   Pneumatic connection (Page 29)
3. Ground the positioner.
   Grounding (Page 29)
4. Remove the enclosure cover.
5. Commission the positioner.
   Initialize in "NO INIT" operating mode (Page 35)
   Local operation (Page 37)
6. Remove the enclosure cover.

Introduction 2

2.1 Purpose of this documentation

These instructions are a brief summary of important features, functions and safety information, and contain all information required for safe use of the device. Read the instructions carefully prior to installation and commissioning. In order to use the device correctly, first review its principle of operation.

The instructions are aimed at persons who install and commission the device.

To realize optimum performance from the device, read the complete operating instructions.

2.2 Document history

The overview below summarizes the most important changes in the documentation when compared to the previous edition.

Edition	Comment
05/2021	First edition

2.3 Product compatibility

The following table describes the compatibility between the edition of the manual, device revision, engineering system and associated Electronic Device Description (EDD).

Manual edition	Comments	Device revision	Compatible version of device integration package
05/2021	New manual edition	FW: 1.03.00 or higher Device revision 1 or higher	EDD: 1.00.00

2.4 Designated use

Use the device in accordance with the information on the nameplate and in the Technical specifications (Page 43).

2.5 Checking the consignment

1. Check the packaging and the delivered items for visible damages.
2. Report any claims for damages immediately to the shipping company.

3. Retain damaged parts for clarification.
4. Check the scope of delivery by comparing your order to the shipping documents for correctness and completeness.

WARNING

Using a damaged or incomplete device

Risk of explosion in hazardous areas.

- Do not use damaged or incomplete devices.

2.6 Design of the nameplate

Example of manufacturer nameplate

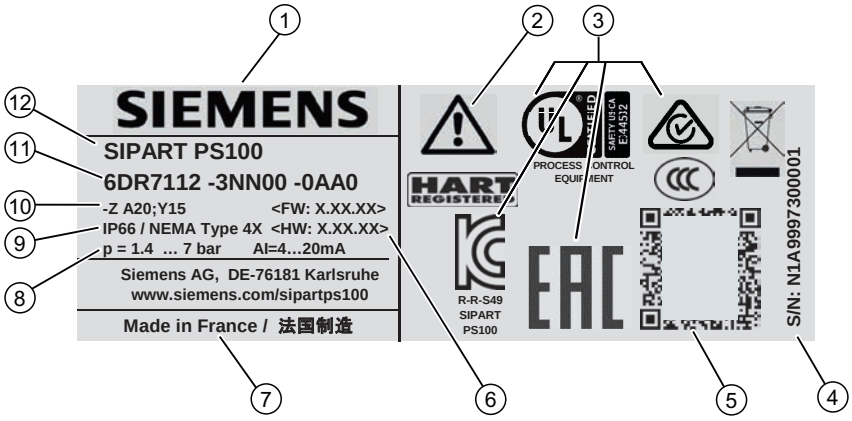

①	Manufacturer	⑦	Country of origin
②	Note operating instructions, certificates and approvals under Product documentation (Page 51)	⑧	Supply pressure PZ
③	Conformity with country-specific directives	⑨	Degree of protection
④	Serial number	⑩	Ordering supplement (Order code)
⑤	QR code to the mobile website with device-specific product information	⑪	Article number
⑥	Firmware version and hardware version	⑫	Product name

Example of explosion protection nameplate

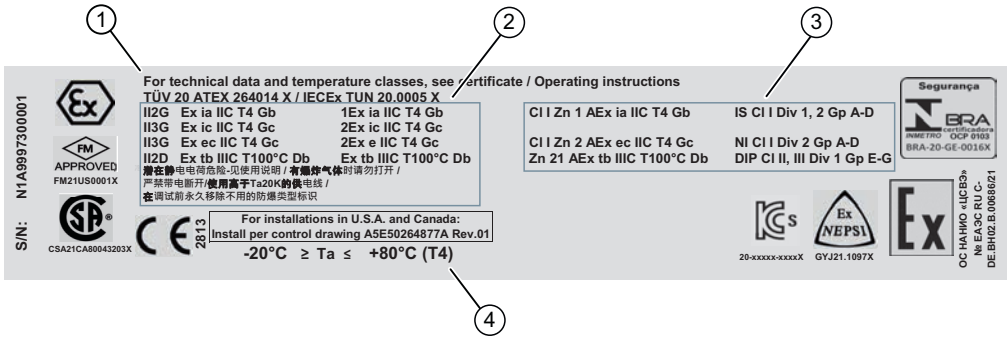

① Approvals

② ATEX/IECEx marking for hazardous area

③ FM/CSA marking for hazardous area

④ Permissible ambient temperature for operation in hazardous areas

2.7 Security information

Siemens provides products and solutions with industrial security functions that support the secure operation of plants, systems, machines and networks.

In order to protect plants, systems, machines and networks against cyber threats, it is necessary to implement – and continuously maintain – a holistic, state-of-the-art industrial security concept. Siemens' products and solutions constitute one element of such a concept.

Customers are responsible for preventing unauthorized access to their plants, systems, machines and networks. Such systems, machines and components should only be connected to an enterprise network or the internet if and to the extent such a connection is necessary and only when appropriate security measures (e.g. firewalls and/or network segmentation) are in place.

For additional information on industrial security measures that may be implemented, please visit
https://www.siemens.com/industrialsecurity.

Siemens' products and solutions undergo continuous development to make them more secure. Siemens strongly recommends that product updates are applied as soon as they are available and that the latest product versions are used. Use of product versions that are no longer supported, and failure to apply the latest updates may increase customer's exposure to cyber threats.

To stay informed about product updates, subscribe to the Siemens Industrial Security RSS Feed under
https://www.siemens.com/industrialsecurity.

2.8 Transportation and storage

To guarantee sufficient protection during transport and storage, observe the following:

- Keep the original packaging for subsequent transportation.
- Devices/replacement parts should be returned in their original packaging.
- If the original packaging is no longer available, ensure that all shipments are properly packaged to provide sufficient protection during transport. Siemens cannot assume liability for any costs associated with transportation damages.

NOTICE
Insufficient protection during storage The packaging only provides limited protection against moisture and infiltration. • Provide additional packaging as necessary.

Special conditions for storage and transportation of the device are listed in Technical specifications (Page 43).

2.9 Notes on warranty

The contents of this manual shall not become part of or modify any prior or existing agreement, commitment or legal relationship. The sales contract contains all obligations on the part of Siemens as well as the complete and solely applicable warranty conditions. Any statements regarding device versions described in the manual do not create new warranties or modify the existing warranty.

The content reflects the technical status at the time of publishing. Siemens reserves the right to make technical changes in the course of further development.

Safety notes

3

3.1 Prerequisites for safe use

This device left the factory in good working condition. In order to maintain this status and to ensure safe operation of the device, observe these instructions and all the specifications relevant to safety.

Observe the information and symbols on the device. Do not remove any information or symbols from the device. Always keep the information and symbols in a completely legible state.

3.1.1 Warning symbols on the device

Symbol	Explanation
⚠	Consult operating instructions

3.1.2 Laws and directives

Observe the test certification, provisions and laws applicable in your country during connection, assembly and operation. These include, for example:

- National Electrical Code (NEC - NFPA 70) (USA)
- Canadian Electrical Code (CEC) (Canada)

Further provisions for hazardous area applications are for example:

- IEC 60079-14 (international)
- EN 60079-14 (EU)
- For Korea only:
  이 기기는 업무용(A 급) 전자파 적합기기로서 판매자
  또는 사용자는 이 점을 주의하시기 바라며 가정 외의

  지역에서사용하는 것을 목적으로 합니다

3.1.3 Conformity with European directives

The CE marking on the device shows conformity with the regulations of the following European guidelines:

Electromagnetic compatibility EMC 2014/30/EU	Directive of the European Parliament and of the Council on the harmonization of the laws of the Member States relating to electromagnetic compatibility.
Atmosphère explosible ATEX 2014/34/EU	Directive of the European Parliament and of the Council on the harmonization of the laws of the Member States relating to equipment and protective systems intended for use in potentially explosive atmospheres.
2011/65/EU RoHS	Directive of the European Parliament and of the Council on the restriction of the use of certain hazardous substances in electrical and electronic equipment

The directives applied can be found in the EU declaration of conformity for the associated device.

3.1.4 Product approval and UL compliance

Classification according to pressure equipment directive (PED 2014/68/EU)	For fluid group 1 gases; fulfills requirements according to article 4, paragraph 3 (good engineering practice SEP)
CE conformity	The applicable directives and applied standards with their revision levels can be found in the EU declaration of conformity on the Internet.
UL conformity	You can find the appropriate "Standard(s) for Safety", including the relevant versions, in the UL-CERTIFICATE OF COMPLIANCE on the Internet under Certificate (http://www.siemens.com/processinstrumentation/certificates).

WARNING

Improper device modifications

Risk to personnel, system and environment can result from modifications to the device, particularly in hazardous areas.

- Only carry out modifications that are described in the instructions for the device. Failure to observe this requirement cancels the manufacturer's warranty and the product approvals.

3.2 Use in hazardous areas

Qualified personnel for hazardous area applications

Persons who install, connect, commission, operate, and service the device in a hazardous area must have the following specific qualifications:

- They are authorized, trained or instructed in operating and maintaining devices and systems according to the safety regulations for electrical circuits, high pressures, aggressive, and hazardous media.
- They are authorized, trained, or instructed in carrying out work on electrical circuits for hazardous systems.
- They are trained or instructed in maintenance and use of appropriate safety equipment according to the pertinent safety regulations.

WARNING

Use in hazardous area

Risk of explosion.

- Only use equipment that is approved for use in the intended hazardous area and labeled accordingly.
- Do not use devices that have been operated outside the conditions specified for hazardous areas. If you have used the device outside the conditions for hazardous areas, make all Ex markings unrecognizable on the nameplate.

WARNING

Loss of safety of device with type of protection "Intrinsic safety Ex i"

If the device or its components have already been operated in non-intrinsically safe circuits or the electrical specifications have not been observed, the safety of the device is no longer ensured for use in hazardous areas. There is a risk of explosion.

- Connect the device with type of protection "Intrinsic safety" solely to an intrinsically safe circuit.
- Observe the specifications for the electrical data on the certificate and/or in Technical specifications (Page 43).

Installing/mounting

4

4.1 Basic safety notes

WARNING

High operating force with pneumatic actuators

Risk of injury when working on control valves due to the high operating force of the pneumatic actuator.

- Please observe the corresponding safety instructions for the pneumatic actuator in use.

WARNING

Exceeded maximum permissible operating pressure

Risk of injury or poisoning.

The maximum permissible operating pressure depends on the device version, pressure limit and temperature rating. The device can be damaged if the operating pressure is exceeded. Hot, toxic and corrosive process media could be released.

Ensure that maximum permissible operating pressure of the device is not exceeded. Refer to the information on the nameplate and/or in Technical specifications (Page 43).

WARNING

Electrostatic charging of nameplates

The nameplates used on the device can reach a charging capacity of 5 pF.

- Keep the device and the cables at a distance from strong electromagnetic fields.

CAUTION

Unsuitable compressed air

Device damage. As a general rule, the positioner must only be operated with dry and clean compressed air.

- Use the customary water separators and filters. An additional dryer is required in extreme cases.
- Use dryers, especially if you operate the positioner at low ambient temperatures.

CAUTION

Adhere to the following instructions before working on the control valve and when attaching the positioner

Danger of injury.

- Prior to working on the control valve, you must move the actuator and the process valve into a completely pressureless state. Proceed as follows:
  - Depressurize the actuator chambers.
  - Switch off the supply pressure PZ.
  - Secure the process valve.
- Make sure that the actuator has reached the pressureless state.
- If you interrupt the supply pressure PZ to the positioner, the pressureless position can only be reached after a certain waiting time.
- When mounting, adhere strictly to the following order to avoid injuries or mechanical damage to the positioner/mounting kit:
  - Mount the positioner mechanically.
  - Electric connection.
  - Connect supply pressure PZ.
  - Commission the positioner.

NOTICE

Torque with NPT screwed gland

Device damage. The maximum torque of the cable gland must not be exceeded.

- To avoid damage to the device, the NPT adapter must be held in place while the NPT gland is screwed into the NPT adapter. Refer to the section "Technical specifications > Mechanical construction (Page 45)" for the torque value.

4.1.1 Proper mounting

NOTICE

Incorrect mounting

The device can be damaged, destroyed, or its functionality impaired through improper mounting.

- Before installing ensure there is no visible damage to the device.
- Make sure that process connectors are clean, and suitable gaskets and glands are used.
- Mount the device using suitable tools. Refer to the information in Technical specifications (Page 43).

NOTICE
Freezing of the exhaust air outlets The exhaust air outlets ② can ice up. The function of the device is impaired. • Do **not** install the positioner with the base plate ① pointing up.

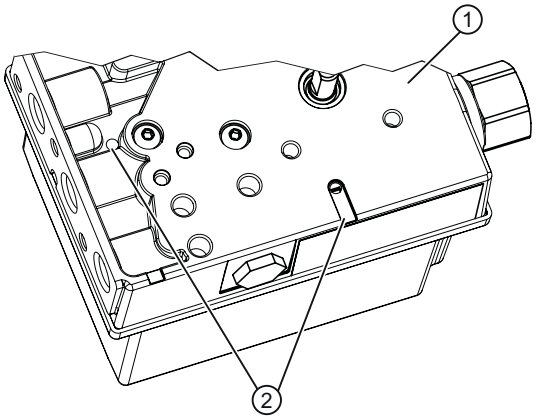

① Base plate
② Exhaust air outlets
Figure 4-1 Exhaust air outlets, base plate

4.2 Mounting to linear actuator

Requirements

Depending on the stroke height, you will need the following mounting kit:

- 3 to 35 mm mounting kit 6DR4004-8V
- 35 to 130 mm mounting kit 6DR4004-8V and additional 6DR4004-8L

Procedure

Sr. no. *)	Quantity	Name	Note
6DR4004-8L:			
①	1	Lever	For the range of stroke from 10 to 130 mm
6DR4004-8V:			
①	1	NAMUR mounting bracket IEC 60534	Standardized connection point for mount with fin, column or plane surface
②	1	Pick-up bracket	Guides the pulley with the carrier pin and rotates the lever arm.
③	2	Clamping piece	Installs the pick-up bracket on the actuator spindle
④	1	Carrier pin	Installation with pulley ⑤ on lever ⑥

Sr. no. *)	Quan-tity	Name	Note
⑤	1	Pulley	Installation with carrier pin ④ on lever ⑥
⑥	1	Lever	For the range of stroke from 3 to 35 mm
⑦	2	U–bolts	Only for actuators with columns
⑧	4	Hexagon bolt	M8x20 DIN 933–A2
⑨	2	Hexagon bolt	M8x16 DIN 933-A2, torque, section "Technical specifications > Mechanical construction (Page 45)"
⑩	6	Spring lock washer	A8 - DIN 127–A2
⑪	6	Washer	B8.4 - DIN 125–A2
⑫	2	Washer	B6.4 - DIN 125–A2
⑬	1	Spring	VD-115E 0.70 x 11.3 x 32.7 x 3.5
⑭	1	Spring lock washer	A6 - DIN 137A–A2
⑮	1	Lock washer	3.2 - DIN 6799–A2
⑯	3	Spring lock washer	A6 - DIN 127–A2
⑰	3	cylinder head screw	M6x25 DIN 7984–A2
⑱	1	Hexagon nut	M6 - DIN 934–A4
⑲	1	Square nut	M6 - DIN 557–A4
⑳	4	Hexagon nut	M8 - DIN 934–A4

*) The numbers refer to the images of the description of the installation steps below.

1. Install the clamping pieces ③ on the actuator spindle. Use spring lock washers ⑯ and cylinder head screws ⑰ for this.
2. Slide the pick-up bracket ② into the milled recesses of the clamping pieces ③.

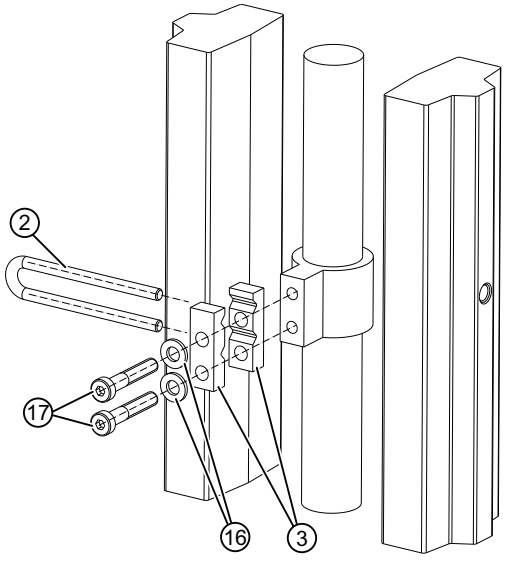

Figure 4-2 Pick-up bracket

3. Tighten the screws ⑰ so that you can still shift the pick-up bracket ②.

4. If you use a short lever, the carrier pin is already premounted. If you use the long lever 6DR4004-8L, fasten the carrier pin ④ with the existing parts to the long lever.

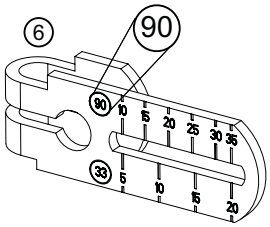

Figure 4-3 Short lever

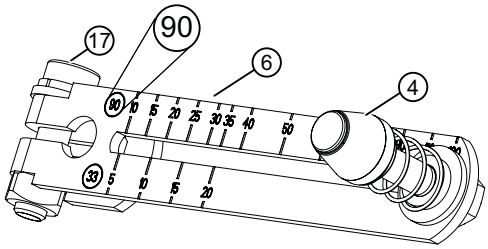

Figure 4-4 Long lever 6DR4004-8L with mounted carrier pin ④ and cylinder head screw ⑰

5. Position the carrier pin on the stroke value of the upper scale (90) of the lever ⑥. For strokes greater than 35 mm, use the long lever, article number 6DR4004-8L.
6. Push the pre-installed lever ⑥ up to the end stop on the positioner shaft. Fasten the lever ⑥ with cylinder head screw ⑰.
7. Install the mounting bracket ① at the rear side of the positioner. Use 2 hexagon bolts ⑨, 2 spring lock washers ⑩ and 2 flat washers ⑪ for this.

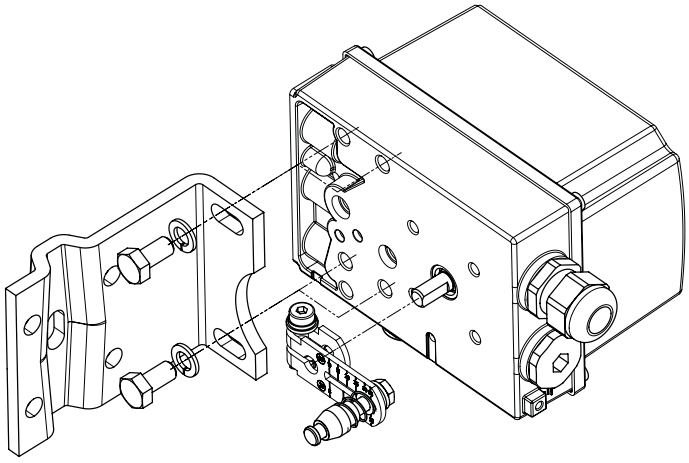

Figure 4-5 Installation with mounting bracket

8. Select the row of holes. The selection of the row of holes depends on the yoke width of the actuator. Select the row of holes in such a way that the carrier pin ④ meshes with the pick-up bracket ② near the spindle. Ensure that the pick-up bracket ② does not touch the clamping pieces ③.

9. Keep the positioner and the mounting bracket on the actuator. Ensure that the carrier pin ④ is guided inside the pick-up bracket ②.
10. Fasten the positioner on the yoke.

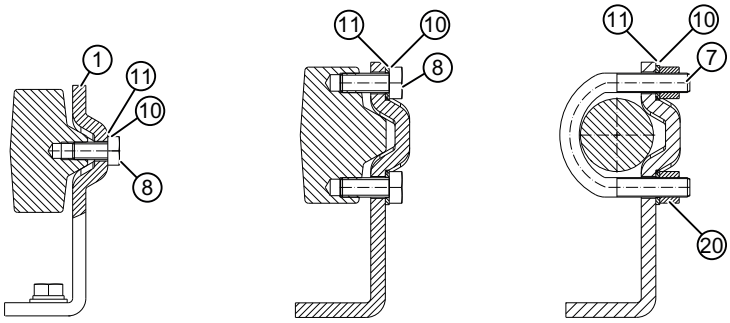

Figure 4-6 Fastening to various yoke types

4.3 Mounting to part-turn actuator

Requirements

- An actuator-specific VDI/VDE 3845 mounting console
- Mounting kit 6DR4004-8D

Procedure

"Part-turn actuator" mounting kit 6DR4004–8D			
Sr. no. *)	**Quantity**	**Name**	**Note**
①	1	Coupling wheel	Installation on positioner shaft
②	1	Carrier	Installing on the actuator shaft
③	1	Multiple plate	Display of the position, consisting of scale and pointer mark
	8	Scale	Different divisions
	2	Pointer mark	Reference point for scale
④		Mount	Actuator-specific, VDI/VDE 3845
⑤	4	Hexagon bolt	M6x12 DIN 933, torque see the section "Technical specifications > Mechanical construction (Page 45)"
⑥	4	Lock washer	S6
⑦	1	Socket cap screw	M6x16 DIN 84
⑧	1	Washer	6.4 DIN 125
⑨	1	Hex socket-head screw	M4 for coupling wheel
⑩	1	Square nut	M4 for coupling wheel
	1	Machinist's wrench	For hexagon socket-head screw ⑨

*) The numbers refer to the images of the description of the installation steps below.

1. Rest the actuator-specific VDI/VDE 3845 mount ④ on the rear side of the positioner.
2. Tighten the mount using the hexagon bolts ⑤ and lock washers ⑥.

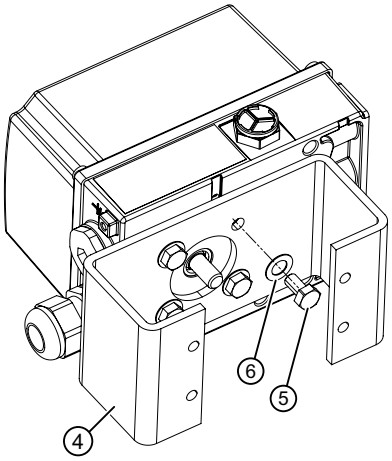

Figure 4-7 Mount

3. Insert the square nut ⑩ into the coupling wheel. Insert the hex socket head screw ⑨ into the square nut ⑩.

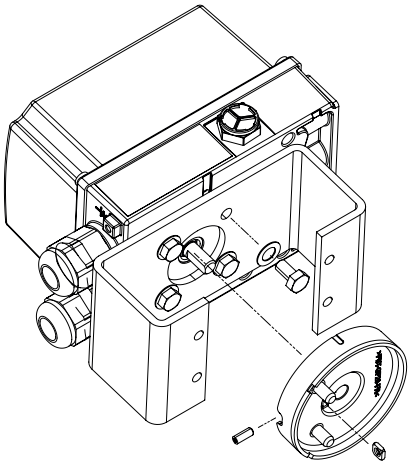

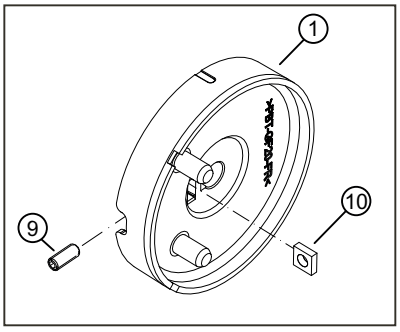

Figure 4-8 Coupling wheel

4. Push the coupling wheel ① or the stainless steel coupling up to the endstop on the positioner shaft.
5. Move the coupling wheel or the stainless steel coupling back by approximately 1 mm.
6. Tighten the hexagon socket-head screw ⑨ using the machinist's wrench provided. Maximum tightening torque = 1 Nm. If you are using the stainless steel coupling, omit the next step.

Note

Coupling wheel

Instead of the polycarbonate coupling wheel ①, it is possible to use a stainless steel coupling (article number TGX: 16300-1556).

7. Place the carrier ② on the actuator shaft.

8. Tighten the carrier ② using the cylinder head screw ⑦ and the washer ⑧.

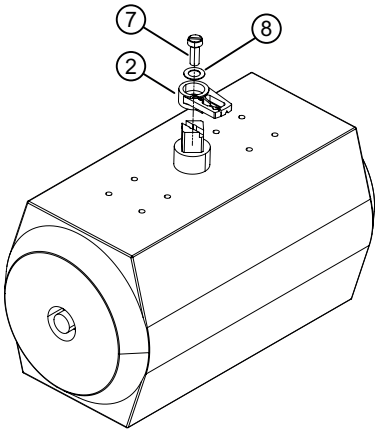

Figure 4-9 Carrier

9. Place the positioner and the mount on the actuator carefully. One of the two pins ⑫ of the coupling wheel ① must fit in the carrier ② when you do this.

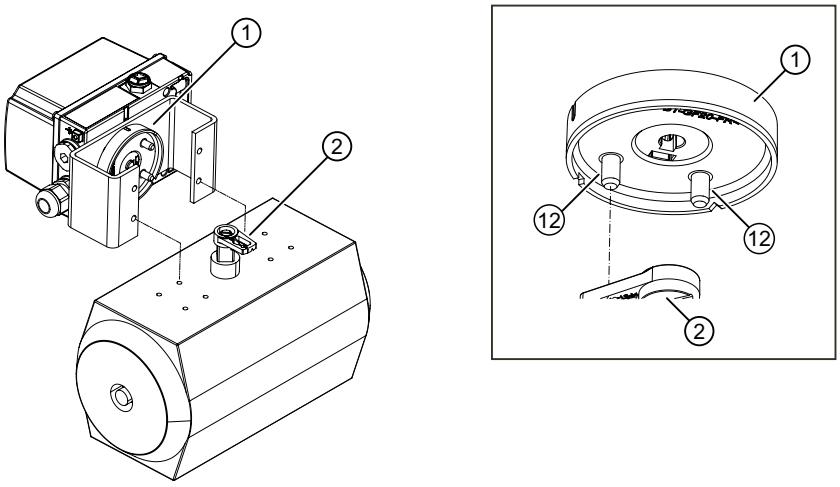

Figure 4-10 Orientation of mount

When using the stainless steel coupling (article number TGX: 16300-1556): Place the positioner and the mount on the actuator carefully. Place the stainless steel coupling on the actuator shaft.

10. Align the positioner/mount at the center of the actuator.
11. Tighten the positioner/mount unit.

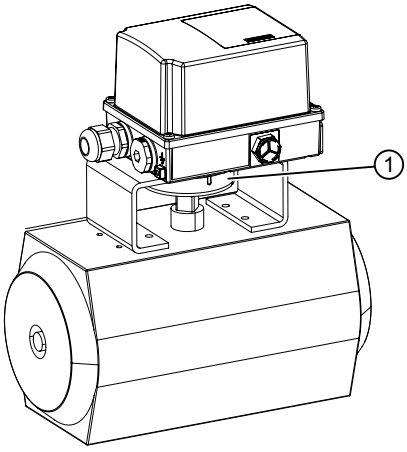

Figure 4-11 Positioner with mount attached to the part-turn actuator

Connecting 5

5.1 Basic safety notes

WARNING

Lever for position detection

Danger of crushing and shearing with mounting kits which use a lever for position detection. During commissioning and ongoing operation, severing or squeezing of limbs could occur as a result of the lever. Risk of injury when working on control valves due to the high operating force of the pneumatic actuator.

- Do not reach into the range of motion of the lever following mounting of the positioner and mounting kit.

WARNING

With intrinsically device version (Ex i)

Risk of explosion in hazardous areas.

For intrinsically safe device versions only the certified circuits may be connected as auxiliary power supply, control and signal circuits.

- Make sure that the power source of the used circuits is marked as intrinsically safe.

WARNING

Eliminating or reducing the sources of ignition within the equipment

Potential fire hazard.

- The product must be connected to an energy-limited circuit.
- Connect the device according to the information in Input (Page 43).

WARNING

Unsuitable cables, cable glands and/or plugs

Risk of explosion in hazardous areas.

- Use only cable glands/plugs that comply with the requirements for the relevant type of protection.
- Tighten the cable glands in accordance with the torques specified in Technical specifications (Page 43).
- Close unused cable inlets for the electrical connections.
- When replacing cable glands, only use cable glands of the same type.
- After installation, check that the cables are seated firmly.

NOTICE

Torque with NPT screwed gland

Device damage. The maximum torque of the cable gland must not be exceeded.

- To avoid damage to the device, the NPT adapter must be held in place while the NPT gland is screwed into the NPT adapter. Refer to the section "Technical specifications > Mechanical construction (Page 45)" for the torque value.

NOTICE

Standard cable gland/torque

Device damage.

- Owing the reasons pertaining to tightness (IP enclosure rating) and the required tensile strength, only use the cables having a diameter ≥ 8 mm for standard M20x1.5 cable gland, or use a suitable seal insert in case of smaller diameters.
- In the NPT version, the positioner is delivered with a coupling. When inserting a counter piece in the coupling, ensure that the maximum permissible torque of 10 Nm is not exceeded.

NOTICE

Condensation in the device

Damage to device through formation of condensation if the temperature difference between transportation or storage and the mounting location exceeds 20 °C (36 °F).

- Before taking the device into operation, let the device adapt for several hours in the new environment.

NOTICE

Ambient temperature too high

Damage to cable sheath.

- At an ambient temperature ≥ 60 °C (140 °F), use heat-resistant cables suitable for an ambient temperature at least 20 °C (36 °F) higher.

WARNING

Improper power supply

Risk of explosion in hazardous areas as result of incorrect power supply.

- Connect the device in accordance with the specified power supply and signal circuits. The relevant specifications can be found in the certificates, in Technical specifications (Page 43) or on the nameplate.

WARNING

Lack of equipotential bonding

Danger of explosion through compensating currents or ignition currents through lack of equipotential bonding.

- Make sure that equipotential bonding exists for the device.
- The cable cross-section of the equipotential bonding cable must be greater than or equal to the connecting cable of the electronics.

Exception: It may be permissible to omit connection of the equipotential bonding for devices with type of protection "Intrinsic safety Ex i".

WARNING

Unprotected cable ends

Risk of explosion through unprotected cable ends in hazardous areas.

- Protect unused cable ends in accordance with IEC/EN 60079-14.

WARNING

Improper laying of shielded cables

Risk of explosion through compensating currents between hazardous area and the non-hazardous area.

- Shielded cables that cross into hazardous areas should be grounded only at one end.
- If grounding is required at both ends, use an equipotential bonding conductor.

WARNING

Connecting or disconnecting device in energized state

Risk of explosion in hazardous areas.

- Connect or disconnect devices in hazardous areas only in a de-energized state.

Exceptions:

- Devices having the type of protection "Intrinsic safety Ex i" may also be connected in energized state in hazardous areas.

WARNING

Incorrect selection of type of protection

Risk of explosion in areas subject to explosion hazard.

This device is approved for several types of protection.

1. Decide in favor of one type of protection.
2. Connect the device in accordance with the selected type of protection.
3. In order to avoid incorrect use at a later point, make the types of protection that are not used permanently unrecognizable on the nameplate.

Two-wire mode

NOTICE

Connection of voltage source to current input

Device damage if a voltage source is connected to the current input I_w (terminals 6 and 7).

- Never connect the current input I_w to a low-resistance voltage source, otherwise the positioner may be destroyed.
- Always use a high-impedance power source.
- Observe the static destruction limit specified in the "Technical specifications (Page 43)".

Note

Improvement of interference immunity

- Lay signal cables separate from cables with voltages > 60 V.
- Use cables with twisted wires.
- Keep the device and the cables at a distance from strong electromagnetic fields.
- Observe the communication conditions described in the section Technical specifications (Page 43).
- Use shielded cable to guarantee the full specification according to HART.

5.2 Grounding

The positioner is grounded via the mounting kit or via grounding with thread M4 on the enclosure, ⑨ in the figure "Overview of the device components (Page 5)".

5.3 Electrical connection

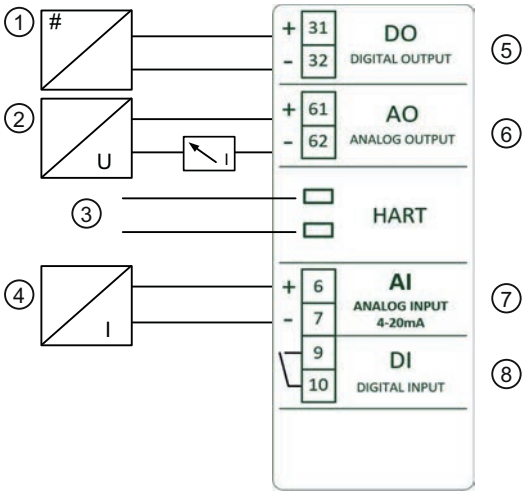

① Digital input or switching amplifier
② Power source 12 to 30 V DC
③ HART connector
④ Signal source 4 to 20 mA
⑤ Digital output
⑥ Analog output of position feedback
⑦ Analog input current input 4 to 20 mA
⑧ Digital input (floating contact)

Figure 5-1 Wiring diagram

5.4 Pneumatic connection

WARNING

Supply pressure PZ

For safety reasons, the supply pressure PZ can be fed after installation only if the positioner is switched to the "NO INIT" mode when an electrical signal is available.

Note

Specifications regarding air quality

Observe the specifications regarding the air quality, see section "Technical specifications > Pneumatic data (Page 44)".

Note

Leakage

Besides continuous air consumption, a leakage can cause the positioner to try to compensate the position deviation. This will result in premature wear in the entire control device.

- Check if there is leakage with "LEAKAGE TEST".
- If there is leakage, check the pneumatic connections for leaks.

Structure of pneumatic connection (Page 30)

Behavior in case of failure of the electrical auxiliary power and/or the supply pressure PZ (Page 31)

5.4.1 Structure of pneumatic connection

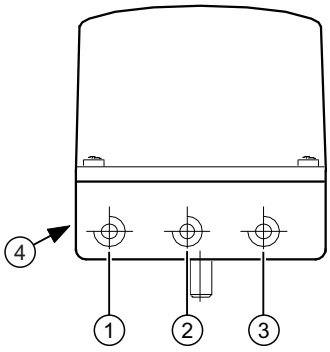

① Output: Actuating pressure Y2 *)

② Input: Supply pressure PZ

③ Output: Actuating pressure Y1

④ Exhaust air outlet with sound absorber, thread G¼

*) for double-acting actuators

Figure 5-2 Pneumatic connection, example

5.4.2 Behavior in case of failure of the electrical auxiliary power and/or the supply pressure PZ

Overview

CAUTION

Note the following before working on the control valve

Note that, before working on the control valve, you must first move it to the safety position. Make sure that the process valve has reached the safety position. If you only interrupt the supply pressure PZ to the positioner, the safety position can in some cases only be attained after a certain delay period.

The difference between a failure of supply pressure PZ and a failure of electrical auxiliary power:

- Failure of **electrical auxiliary power** means the failure of the signal source at the analog input 4 to 20 mA.
- Failure of the **supply pressure PZ**

Actuator type	Behavior in case of failure: The actuator moves into safety position	
	Failure of electrical auxiliary power	Failure of supply pressure PZ
Single-acting	Y1 = vented	Y1 = vented
Double-acting	Y1 = pressurized Y2 = vented	Y1 = closed Y2 = closed

Commissioning 6

6.1 Basic safety notes

WARNING

Risk of crushing through lever of position detection

When the positioner is commissioned, immediate movement of the valve may occur.

If the positioner is in "NO INIT" mode, the movement of the valve starts immediately as soon as you press the left button on the positioner.

Danger of crushing and shearing with mounting kits which use a lever for position detection. During commissioning and during ongoing operation, severing or squeezing of limbs could occur as a result of the lever. Risk of injury when working on control valves due to the high operating force of the pneumatic actuator.

- Do not reach into the range of motion of the lever following mounting of the positioner and mounting kit.

WARNING

Improper commissioning in hazardous areas

Device failure or risk of explosion in hazardous areas.

- Do not commission the device until it has been mounted completely and connected in accordance with the information in Installing/mounting (Page 15).
- Before commissioning take the effect on other devices in the system into account.

WARNING

Commissioning and operation with pending error

If an error message appears, correct operation in the process is no longer guaranteed.

- Check the gravity of the error.
- Correct the error.
- If the error still exists:
  - Take the device out of operation.
  - Prevent renewed commissioning.

WARNING

Loss of explosion protection

Risk of explosion in hazardous areas if the device is open or not properly closed.

- Close the device as described in Technical specifications (Page 43).

WARNING

Opening device in energized state

Risk of explosion in hazardous areas

- Only open the device in a de-energized state.
- Check prior to commissioning that the cover, cover locks, and cable inlets are assembled in accordance with the directives.

Exception: Devices having the type of protection "Intrinsic safety Ex i" may also be opened in energized state in hazardous areas.

6.2 Initialize in "NO INIT" operating mode

If "NO INIT" appears in the display this means that the device is not initialized, Info ID [6C]. Commission the device by initializing it with "NO INIT".

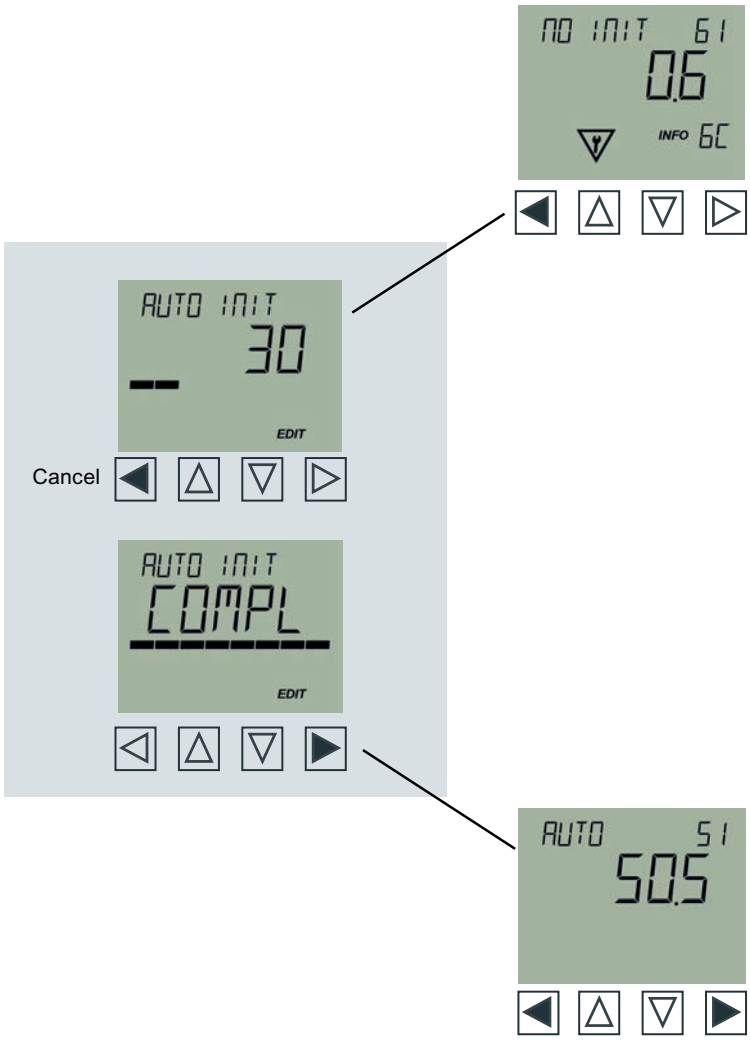

Local operation

Navigating in "NO INIT" operation mode

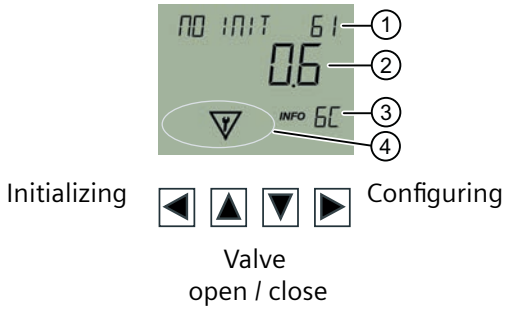

① Operation mode and setpoint in percent
② Angle of position detection in degrees
③ Info
④ Symbols for device status

Navigating in "AUTO" and "MANUAL" operation mode

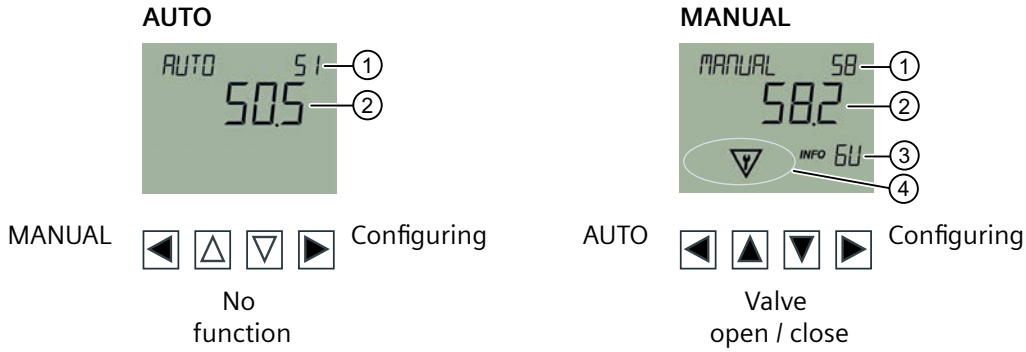

① Operation mode and setpoint in percent
② Valve position as a percentage
③ Info
④ Symbols for device status

Navigating in parameter view and edit view

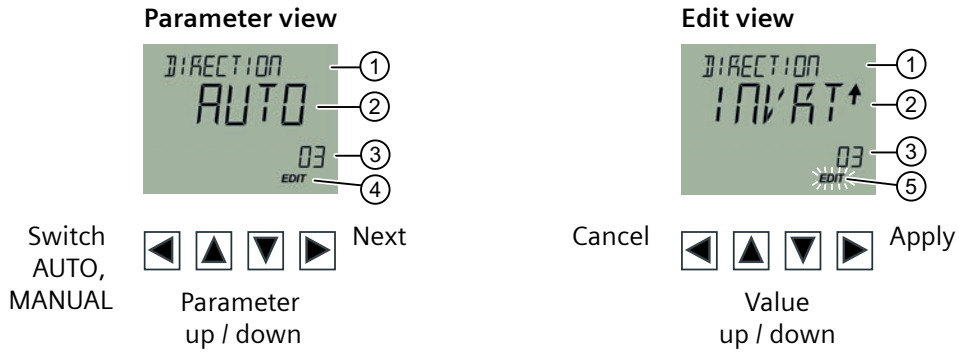

① In the parameter view: Parameter name
In the Edit view: Name and unit of the parameter (alternating)

② Parameter value

③ Parameter ID

④ EDIT permanently enabled

⑤ EDIT flashes

Service and maintenance

8

8.1 Basic safety notes

8.1.1 Maintenance

The device is maintenance-free. However, a periodic inspection according to pertinent directives and regulations must be carried out.

An inspection can include, for example, check of:

- Ambient conditions
- Seal integrity of the process connections, cable entries, and cover
- Reliability of power supply, lightning protection, and grounds

⚠ WARNING
Dust layers above 5 mm Risk of explosion in hazardous areas. Device may overheat due to dust build up. • Remove dust layers in excess of 5 mm.

NOTICE
Penetration of moisture into the device Damage to device. • Make sure when carrying out cleaning and maintenance work that no moisture penetrates the inside of the device.

8.2 Cleaning

Cleaning the enclosure

- Clean the outside of the enclosure with the inscriptions and the display window using a cloth moistened with water or a mild detergent.
- Do not use any aggressive cleansing agents or solvents, e.g. acetone. Plastic parts or the painted surface could be damaged. The inscriptions could become unreadable.

WARNING

Electrostatic charge

Risk of explosion in hazardous areas if electrostatic charges develop, for example, when cleaning plastic surfaces with a dry cloth.

- Prevent electrostatic charging in hazardous areas.

8.3 Maintenance and repair work

Send defective devices to the repairs department, together with information on the malfunction and the cause of the malfunction. When ordering replacement devices, please provide the serial number of the original device. You can find the serial number on the nameplate.

WARNING

Impermissible repair of the device

- Repair must be carried out by Siemens authorized personnel only.

WARNING

Maintenance during continued operation in a hazardous area

There is a risk of explosion when carrying out repairs and maintenance on the device in a hazardous area.

- Isolate the device from power.

- or -

- Ensure that the atmosphere is explosion-free (hot work permit).

WARNING

Impermissible accessories and spare parts

Risk of explosion in areas subject to explosion hazard.

- Only use original accessories or original spare parts.
- Observe all relevant installation and safety instructions described in the instructions for the device or enclosed with the accessory or spare part.

WARNING

Improper connection after maintenance

Risk of explosion in areas subject to explosion hazard.

- Connect the device correctly after maintenance.
- Close the device after maintenance work.

Refer to Electrical connection (Page 29).

8.4 Return procedure

Enclose the bill of lading, return document and decontamination certificate in a clear plastic pouch and attach it firmly to the outside of the packaging. Any devices/replacement parts which are returned without a decontamination declaration will be cleaned at your expense before further processing. For further details, refer to the operating instructions.

See also

Return document (http://www.siemens.com/processinstrumentation/returngoodsnote)

Decontamination declaration (http://www.siemens.com/sc/declarationofdecontamination)

8.5 Disposal

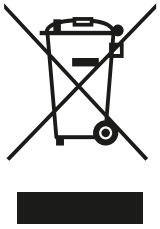

Devices described in this manual should be recycled. They may not be disposed of in the municipal waste disposal services according to the Directive 2012/19/EC on waste electronic and electrical equipment (WEEE).

Devices can be returned to the supplier within the EC, or to a locally approved disposal service for eco-friendly recycling. Observe the specific regulations valid in your country.

Further information about devices containing batteries can be found at: Information on battery/product return (WEEE) (https://support.industry.siemens.com/cs/document/109479891/)

Technical specifications

9

9.1 Input

Analog input (AI), terminal 6 and 7	
Nominal signal range	4 ... 20 mA
Minimum current to maintain the operation	3.8 mA
Maximum load voltage 4 ... 20 mA	6.5 V corresponds to 325 Ω at 20 mA
Maximum load voltage HART	8.4 V corresponds to 420 Ω at 20 mA
Static destruction limit	± 40 mA
Type of communication	HART 7

Digital input (DI), terminals 9 and 10	
Galvanic isolation	Galvanically connected to analog input Galvanically isolated from the outputs
Signal status 0, floating contact open	> 300 kΩ
Signal status 1, floating contact closed	< 3 kΩ
Contact load	Can only be used for floating contact; Max. contact load < 20 µA, 3 V

9.2 Output

Analog output (AO), terminals 61 and 62	
Wiring configuration	2-wire connection
Nominal signal range	4 ... 20 mA
Fault current	< 3.6 mA
Supply voltage U_H	12 ... 30 V
External load R_B[kΩ]	≤ (U_H [V] - 12 V)/20 mA
Resolution in relation to the nominal signal range	0.05%
Maximum transmission error in relation to the nominal signal range	± 0.3%
Maximum effect of ambient temperature	± 0.1 %/10 K
Maximum residual ripple	± 0.5%
Galvanic isolation	Galvanically isolated from the other electrical inputs and outputs

Digital output (DO), terminals 31 and 32	
Maximum supply voltage U_H	35 V
"Conductive" state	• Permissible rated current 50 mA • Maximum terminal voltage 3 V • Overload-proof
"Locked" state "Locked" is also the status if the device is faulty or analog input (AI) is = 0 mA.	I < 60 µA

9.3 Rated conditions

Operating conditions	
Ambient conditions for operation according to IEC 60068-2	For use indoors and outdoors.
• Ambient temperature	-20 ... +80 °C (-4 ... +176 °F)
• Relative humidity	0 ... 100%
Pollution degree according to IEC 61010-1	2
Overvoltage category according to IEC 61010-1	II
Enclosure degree of protection	
• In accordance with IEC 60529	IP66
• In accordance with NEMA 250	Type 4X
Corrosion protection according to EN ISO 9227:2012 and EN ISO 12944:1999	
• 6DR710 polycarbonate enclosure	C5-M medium durability
• 6DR711 aluminum enclosure	C5-M medium durability
Vibration resistance	
• Harmonic oscillations (sine) according to IEC 60068-2-6	3.5 mm (0.14"), 2 ... 27 Hz, 3 cycles/axle
	98.1 m/s² (321.84 ft/s²), 27 ... 300 Hz, 3 cycles/axle
• Bump (half-sine) according to IEC 60068-2-27	150 m/s² (492 ft/s²), 6 ms, 1000 shocks/axle
• Noise (controlled digitally) according to IEC 60068-2-64	10 ... 200 Hz; 1 (m/s²)²/Hz (3.28 (ft/s²)²/Hz)
	200 ... 500 Hz; 0.3 (m/s²)²/Hz (0.98 (ft/s²)²/Hz)
	4 hours/axle

9.4 Pneumatic data

Pneumatic data	
Pneumatic operating medium	Compressed air, carbon dioxide (CO_2), nitrogen (N_2), noble gases
• Operating pressure	1.4 ... 7 bar (20.3 ... 101.5 psi)

Pneumatic data	
Quality class compressed air according to ISO 8573-1	
• Solid impurities	Class 3
• Pressure dew point	Min. 20 K (36 °F) below ambient temperature
• Oil content	Class 3
Flow rate	
• Aerate process drive	
Supply pressure 4 bar (58 psi)	7.1 m^3/h (31.3 USgpm)
Supply pressure 6 bar (87 psi)	9.8 m^3/h (43.1 USgpm)
• Depressurize process drive	
Actuating pressure 4 bar (58 psi)	13.7 m^3/h (60.3 USgpm)
Actuating pressure 6 bar (87 psi)	19.2 m^3/h (84.5 USgpm)
Leakage actuator chamber (positioner portion)	< $6 \cdot 10^{-4}$ m^3/h (0.0026 USgpm)
Consumption at operating medium in the controlled state	< $3.6 \cdot 10^{-2}$ m^3/h (0.158 USgpm)
Sound pressure level	$L_{A\ eq}$ < 75 dB $L_{A\ max}$ < 80 dB

9.5 Mechanical construction

Mechanical construction	
Supported actuator types	
• Linear actuator, range of stroke	10 to 130 mm (0.39 to 5.12")
• Part-turn actuator, angle-of-rotation range	10 to 100°
Weight, positioner without accessories	Approx. 1.0 kg (2.20 lb)
Material	
• Lid	• Aluminum • Polycarbonate
• Base plate	Aluminum
Torques	
• Lid fixing screws	1.5 Nm (1.1 ft lb)
• Part-turn actuator fixing screws DIN 933 M6x12-A2	5 Nm (3.7 ft lb)
• Linear actuator fixing screws DIN 933 M8x16-A2	12 Nm (8.9 ft lb)
• Gland pneumatic G¼	15 Nm (11.1 ft lb)
• Pneumatic gland 1/4-18 NPT	
Without sealant	12 Nm (8.9 ft lb)
With sealant	6 Nm (4.4 ft lb)
• M20 cable gland, plastic	4 Nm (3 ft lb)
• M20 cable gland, metal	6 Nm (4.4 ft lb)
• Cable gland 1/2-14 NPT metal	15 Nm (11.1 ft lb)

Mechanical construction	
• Cable gland for NPT bushing in the NPT adapter NOTE: To avoid damage to the device, the NPT adapter must be held in place while the NPT gland is screwed into the NPT adapter.	68 Nm (50 ft lb)
• Screw cap made of plastic	2.5 Nm (1.8 ft lb)
• Screw cap made of metal	4 Nm (3 ft lb)
• Pressure gauge block fixing screws	6 Nm (4.4 ft lb)
Pressure gauge	
• Material pressure gauge	Plastic, Mechanics brass
	Stainless steel, Mechanics brass nickel-plated
	Stainless steel, Mechanics stainless steel 316
• Material pressure gauge block	Anodised aluminium
	Stainless steel 316
• Degree of protection	
Plastic, Mechanics brass, Pressure gauge block anodised aluminium	IP31
Stainless steel, Mechanics brass nickel-plated, Pressure gauge block anodised aluminium	IP44
Stainless steel, Mechanics stainless steel 316, Pressure gauge block stainless steel 316	IP54
Connections, electrical	
• Screw terminals	2.5 mm^2 AWG30-14
• Cable gland	M20x1.5 or 1/2-14 NPT with NPT adapter
Connections, pneumatic	G¼ or ¼-18 NPT

9.6 Controller

Controller	
Control unit	
• Five-point controller	Adaptive
• Deadband	
Adjustable peak value	± 0.1 to 3%, plus hysteresis (half of the dead-band, but at least 0.2%)
Minimization of the peak value	Always active
Analog input (AI), terminal 6 and 7	
• Sampling interval	50 ms
• Resolution	0.05%
Position detection	
• Sampling interval	10 ms

Controller	
• Resolution at 10 mm stroke height	0.1%
• Effect of ambient temperature	0.1%/10 K

9.7 Explosion protection

9.7.1 Type key

Each device has a nameplate (Page 8). This nameplate shows a specific article number for the device. Lower-case letters are used and explained in the tables below for the variable digits in the article number. Each variable that is used stands for a different order version. You will find the order data in the FI 01 catalog (http://www.siemens.com/processinstrumentation/catalogs) on the Internet.

1	2	3	4	5	6	7	-	8	9	10	11	12	-	13	14	15	16	-	17			
6	D	R	7	1	a	*	-	b	c	N	d	e	-	f	*	g	0	-	Z	j	j	j

*= any character

6DR71 (a = 0)	6DR71 (a = 1)
Polycarbonate with window	Aluminum without window

If enclosure a =	If explosion protection b = [1]	If order code Z =	
0	1	-	or
1	1, 2, 3	-	

[1] For TIIS: b = 1; Order code Z = -ZE29

9.7.2 Markings for explosion protection

1	2	3	4	5	6	7	-	8	9	10	11	12	-	13	14	15	16	-	17			
6	D	R	7	1	a	*	-	b	c	N	d	e	-	f	*	g	0	-	Z	j	j	j

With		ATEX / IECEx	CSA	FM	EACEx
a =	b =				
0, 1	1	II 2 G Ex ia IIC T4 Gb [1)] II 3 G Ex ic IIC T4 Gc [1)]	Ex ia IIC T4 Gb Ex ic IIC T4 Gc IS Cl I Div 1, 2 Gp A-D	Cl I Zn 1 AEx ia IIC T4 Gb IS Cl I Div 1, 2 Gp A-D	1Ex ia IIC T4 Gb X 2Ex ic IIC T4 Gc X
1	2	II2G Ex ia IIC T4 Gb II3G Ex ic IIC T4 Gc II3G Ex ec IIC T4 Gc	Ex ia IIC T4 Gb Ex ic IIC T4 Gc Ex ec IIC T4 Gc IS Cl I Div 1, 2 Gp A-D Cl I Div 2 Gp A-D	Cl I Zn 1 AEx ia IIC T4 Gb Cl I Zn 2 AEx ec IIC T4 Gc IS Cl I Div 1, 2 Gp A-D NI Cl I Div 2 Gp A-D	1Ex ia IIC T4 Gb X 2Ex ic IIC T4 Gc X 2Ex ec IIC T4 Gc X
1	3	II2G Ex ia IIC T4 Gb II3G Ex ic IIC T4 Gc II3G Ex ec IIC T4 Gc II2D Ex tb IIIC T100°C Db	Ex ia IIC T4 Gb Ex ic IIC T4 Gc Ex ec IIC T4 Gc Ex tb IIIC T100°C Db IS Cl I Div 1, 2 Gp A-D Cl I Div 2 Gp A-D Cl II, III Div 1 Gp E-G	Cl I Zn 1 AEx ia IIC T4 Gb Cl I Zn 2 AEx ec IIC T4 Gc Zn 21 AEx tb IIIC T100°C Db IS Cl I Div 1, 2 Gp A-D NI Cl I Div 2 Gp A-D DIP Cl II, III Div 1 Gp E-G	1Ex ia IIC T4 Gb X 2Ex ic IIC T4 Gc X 2Ex ec IIC T4 Gc X Ex tb IIIC T100°C Db X

[1)] TIIS markings (only for the Japanese market)

CSAUK 21JPN005 for Ex ia IIC T4 Gb

CSAUK 21JPN006 for Ex ic IIC T4 Gc

9.7.3 Ambient temperature

Maximum permitted ambient temperature during operation in hazardous areas with potentially explosive atmosphere

Positioner	Temperature class T4
6DR710* and 6DR711*	-20°C ≤ Ta ≤ +80°C

9.7.4 Electrical specifications

	Basic electronics with explosion protection		
	Ex "ia"	**Ex "ic"**	**Ex "ec", "tb"**
Analog input (AI) HART / 4 ... 20 mA **Terminals 6(+) and 7(-)**			
For connecting to circuits with the following peak values	U_i ≤ 30 V	U_i ≤ 30 V	U_n ≤ 30 V
	I_i ≤ 100 mA	I_i ≤ 100 mA	I_n ≤ 100 mA
	P_i ≤ 750 mW	-	-
	C_i ≤ 6 nF	C_i ≤ 6 nF	-
	L_i ≤ 221 µH	L_i ≤ 221 µH	-
Analog output (AO) 4 ... 20 mA **Terminals 61(+) and 62(-)**			
For connecting to circuits with the following peak values	U_i ≤ 30 V	U_i ≤ 30 V	U_n ≤ 30 V
	I_i ≤ 100 mA	I_i ≤ 100 mA	I_n ≤ 100 mA
	P_i ≤ 750 mW	-	-
	C_i ≤ 7 nF	C_i ≤ 7 nF	-
	L_i ≤ 66 µH	L_i ≤ 66 µH	-
Analog output (AO) galvanically isolated from the analog input (AI)			
Test voltage	840 V DC, 1 s		

9.8 Mobile IQ app and AW050 Bluetooth adapter

9.8.1 SITRANS mobile IQ

Software requirements	
Required Android version	7.0 or higher
Required iOS version	12.0 or higher
Bluetooth	BLE 4.2 or higher

9.8.2 SITRANS AW050 Bluetooth adapter

Operating conditions and structural design	
Ambient conditions	For use indoors and outdoors.
Ambient temperature	Observe the maximum permissible ambient temperature for the field device.
• Permissible ambient temperature for operation	-40 ... +80 °C (-40 ... +176 °F)
• Relative humidity	0 ... 100%
Degree of pollution standard IEC 61010-1	2
Overvoltage category	II
Weight	60 g
Degree of protection	• Type 4X, Type 6 according to UL 50E • IP66, IP68 according to IEC 60529
EMC	EN 61326
Input voltage range	2.2 ... 3.4 V DC
Maximum current consumption	2.5 mA
Material	Polycarbonate
Torque for cable gland	Corresponds to the specifications in the technical specifications in the section Mechanical construction (Page 45)
Communication, interface	BLE 4.2
Range	Class 2; approx. 10 m depending on mounting position
Radio approval	Contains FCC ID: RYYEYSHJN Contains IC ID: 4389B-EYSHJN CMIIT ID: 2020DJ15120

See also

Certificates (http://www.siemens.com/processinstrumentation/certificates)

Product documentation and support

A

A.1 Product documentation

Process instrumentation product documentation is available in the following formats:

- Certificates (http://www.siemens.com/processinstrumentation/certificates)
- Downloads (firmware, EDDs, software) (http://www.siemens.com/processinstrumentation/downloads)
- Catalog and catalog sheets (http://www.siemens.com/processinstrumentation/catalogs)
- Manuals (http://www.siemens.com/processinstrumentation/documentation)
  You have the option to show, open, save, or configure the manual.
  - "Display": Open the manual in HTML5 format
  - "Configure": Register and configure the documentation specific to your plant
  - "Download": Open or save the manual in PDF format
  - "Download as html5, only PC": Open or save the manual in the HTML5 view on your PC

You can also find manuals with the Mobile app at Industry Online Support (https://support.industry.siemens.com/cs/ww/de/sc/2067). Download the app to your mobile device and scan the device QR code.

Product documentation by serial number

Using the PIA Life Cycle Portal, you can access the serial number-specific product information including technical specifications, spare parts, calibration data, or factory certificates.

Entering a serial number

1. Open the PIA Life Cycle Portal (https://www.pia-portal.automation.siemens.com).
2. Select the desired language.
3. Enter the serial number of your device. The product documentation relevant for your device is displayed and can be downloaded.

To display factory certificates, if available, log in to the PIA Life Cycle Portal using your login or register.

Scanning a QR code

1. Scan the QR code on your device with a mobile device.
2. Click "PIA Portal".

To display factory certificates, if available, log in to the PIA Life Cycle Portal using your login or register.

A.2 Technical support

Technical support

If this documentation does not completely answer your technical questions, you can enter a Support Request (http://www.siemens.com/automation/support-request).

Additional information on our technical support can be found at Technical Support (http://www.siemens.com/automation/csi/service).

Service & support on the Internet

In addition to our technical support, Siemens offers comprehensive online services at Service & Support (http://www.siemens.com/automation/serviceandsupport).

Contact

If you have further questions about the device, contact your local Siemens representative at Personal Contact (http://www.automation.siemens.com/partner).

To find the contact for your product, go to "all products and branches" and select "Products & Services > Industrial automation > Process instrumentation".

Contact address for business unit:
Siemens AG
Digital Industries
Process Automation
Östliche Rheinbrückenstr. 50
76187 Karlsruhe, Germany

Index

A

Actuating pressure
    Figure, 30
    Position, 5
Article number, 47
    on the nameplate, 8

B

Buttons
    Position, 5

C

Cable gland
    Technical data, 45
Carrier, 20
Catalog
    catalog sheets, 51
Certificates, 11, 51
Circuit diagram
    Position, 5
Cleaning, 39
Compressed air, 15
Connecting terminals, 5
Connection
    Pneumatic, 30
Customer Support, (Refer to Technical support)

D

Display
    Position, 5
Disposal, 41
Document history, 7
Downloads, 51

E

Exhaust air outlet
    Position, 5

F

Freezing
    Exhaust air outlet, 17

H

Hazardous area
    Laws and directives, 11
    Laws and directives for Korea, 11
    Qualified personnel, 13
Hotline, (Refer to Support request)

I

I/Os
    Technical data, 46

L

Laws and directives, 11

M

Maintenance, 39
Manuals, 51
Material
    Technical data, 45
Material adapter
    Technical specifications, 50
Mechanical construction
    Technical data, 45, 46
    Technical specifications, 50
Modifications
    correct usage, 12
    improper, 12
Mounting kit
    Linear actuator, 17

O

Order code, 8
Ordering supplement, 8

P

Part-turn actuator
    Mounting, 20
Pressure gauge
    Technical data, 46
Pressure gauge block
    Torque, 46
Product name, 8

Q

Qualified personnel, 13

R

Return procedure, 41

S

Safety position, 31
Scope of delivery, 8
Service, 52
Service and support
    Internet, 52
Sound absorber
    Position, 5
Supply pressure
    Position, 5
Support, 52
Support request, 52

T

Technical support, 52
    partner, 52
    personal contact, 52
Test certificates, 11
Tightening torque
    Technical data, (Torque)
Torque, 45, 50
Type key, 47

W

Warranty, 10
Weight
    Technical data, 45