SIEMENS

Operating Instructions

SITRANS L

Capacitance Transmitters

SITRANS LCS050

Edition 02/2021

https://www.siemens.com

SIEMENS

SITRANS L

Capacitance Transmitters SITRANS LCS050

Operating Instructions

Preface

Introduction 1

Safety notes 2

Description 3

Installing/mounting 4

Connecting 5

Setup 6

Diagnostics and troubleshooting 7

Service and maintenance 8

Certificates and approvals 9

Technical data and dimensions 10

02/2021

65373-76-01

A5E50859888

Legal Information

Warning Notice System

This manual contains notices you have to observe in order to ensure your personal safety, as well as to prevent damage to property. The notices referring to your personal safety are highlighted in the manual by a safety alert symbol, notices referring only to property damage have no safety alert symbol. These notices shown below are graded according to the degree of danger.

⚠ DANGER
indicates that death or severe personal injury will result if proper precautions are not taken.

⚠ WARNING
indicates that death or severe personal injury may result if proper precautions are not taken.

⚠ CAUTION
indicates that minor personal injury can result if proper precautions are not taken.

⚠ NOTICE
indicates that property damage can result if proper precautions are not taken.

If more than one degree of danger is present, the warning notice representing the highest degree of danger will be used. A notice warning of injury to persons with a safety alert symbol may also include a warning relating to property damage.

Qualified Personnel

The product/system described in this documentation may be operated only by **personnel qualified** for the specific task in accordance with the relevant documentation, in particular its warning notices and safety instructions. Qualified personnel are those who, based on their training and experience, are capable of identifying risks and avoiding potential hazards when working with these products/systems.

Proper Use of Siemens Products

Note the following:

⚠ WARNING
Siemens products may only be used for the applications described in the catalog and in the relevant technical documentation. If products and components from other manufacturers are used, these must be recommended or approved by Siemens. Proper transport, storage, installation, assembly, commissioning, operation and maintenance are required to ensure that the products operate safely and without any problems. The permissible ambient conditions must be complied with. The information in the relevant documentation must be observed.

Trademarks

All names identified by ® are registered trademarks of Siemens AG. The remaining trademarks in this publication may be trademarks whose use by third parties for their own purposes could violate the rights of the owner.

Disclaimer of Liability

We have reviewed the contents of this publication to ensure consistency with the hardware and software described. Since variance cannot be precluded entirely, we cannot guarantee full consistency. However, the information in this publication is reviewed regularly and any necessary corrections are included in subsequent editions.

Siemens AG
Digital Industry
Process Automation
Postfach 48 48
90026 NÜRNBERG
GERMANY

© 02/2021 Subject to Change

Copyright © Siemens 2021
All rights reserved

Table of Contents

Preface ..... **v**

1 Introduction **1**

1.1 Function 1

1.2 Target group 1

1.3 Symbols used 1

2 Safety notes **3**

2.1 Authorised personnel 3

2.2 Appropriate use 3

2.3 Warning about incorrect use 3

2.4 General safety instructions 3

2.5 Installation and operation in the USA and Canada 4

3 Description **5**

3.1 Configuration 5

3.2 Principle of operation 6

3.3 Packaging, transport and storage 7

3.4 Accessories 8

4 Installing/mounting **9**

4.1 General instructions 9

4.2 Mounting instructions 11

5 Connecting **13**

5.1 Preparing the connection 13

5.2 Connecting 14

5.3 Wiring plan 14

5.4 Switch-on phase 15

6 Setup **17**

6.1 Indication of the switching status 17

6.2 Function table 17

7 Diagnostics and troubleshooting **19**

7.1 Maintenance 19

7.2 Rectify faults 19

7.3 Diagnosis, fault messages 20

7.4 Return procedure 20
7.5 How to proceed if a repair is necessary 21
8 Service and maintenance 23
8.1 Dismounting steps 23
8.2 Disposal 23
9 Certificates and approvals 25
9.1 Food and pharmaceutical certificates 25
9.2 EU conformity 25
9.3 Environment management system 25
10 Technical data and dimensions 27
10.1 Technical data 27
10.2 Device communication IO-Link 30
10.3 Dimensions 34
10.4 Licensing information for open source software 35
10.5 Trademark 35

Preface

Editing status: 2021-02-24

Introduction

1

1.1 Function

This instruction provides all the information you need for mounting, connection and setup as well as important instructions for maintenance, fault rectification, the exchange of parts and the safety of the user. Please read this information before putting the transmitter into operation and keep this manual accessible in the immediate vicinity of the device.

1.2 Target group

This operating instructions manual is directed to trained personnel. The contents of this manual must be made available to the qualified personnel and implemented.

1.3 Symbols used

Information, note, tip: This symbol indicates helpful additional information and tips for successful work.

Note: This symbol indicates notes to prevent failures, malfunctions, damage to devices or plants.

Caution: Non-observance of the information marked with this symbol may result in personal injury.

Warwarning: Non-observance of the information marked with this symbol may result in serious or fatal personal injury.

Danger: Non-observance of the information marked with this symbol results in serious or fatal personal injury.

Ex applications

This symbol indicates special instructions for Ex applications.

•

List

The dot set in front indicates a list with no implied sequence.

1	**Sequence of actions** Numbers set in front indicate successive steps in a procedure.
	Battery disposal This symbol indicates special information about the disposal of batteries and accumulators.

Safety notes

2

2.1 Authorised personnel

All operations described in this documentation must be carried out only by trained, qualified personnel authorised by the plant operator.

During work on and with the device, the required personal protective equipment must always be worn.

2.2 Appropriate use

The SITRANS LCS050 is a transmitter for point level detection.

You can find detailed information about the area of application in chapter " *Product description*".

Operational reliability is ensured only if the transmitter is properly used according to the specifications in the operating instructions manual as well as possible supplementary instructions.

2.3 Warning about incorrect use

Inappropriate or incorrect use of this product can give rise to application-specific hazards, e.g. vessel overfill through incorrect mounting or adjustment. Damage to property and persons or environmental contamination can result. Also, the protective characteristics of the transmitter can be impaired.

2.4 General safety instructions

This is a state-of-the-art transmitter complying with all prevailing regulations and directives. The transmitter must only be operated in a technically flawless and reliable condition. The operator is responsible for the trouble-free operation of the transmitter. When measuring aggressive or corrosive media that can cause a dangerous situation if the transmitter malfunctions, the operator has to implement suitable measures to make sure the transmitter is functioning properly.

The safety instructions in this operating instructions manual, the national installation standards as well as the valid safety regulations and accident prevention rules must be observed by the user.

For safety and warranty reasons, any invasive work on the device beyond that described in the operating instructions manual may be carried out only by personnel

authorised by the manufacturer. Arbitrary conversions or modifications are explicitly forbidden. For safety reasons, only the accessory specified by the manufacturer must be used.

To avoid any danger, the safety approval markings and safety tips on the device must also be observed.

2.5 Installation and operation in the USA and Canada

This information is only valid for USA and Canada. Hence the following text is only available in the English language.

Installations in the US shall comply with the relevant requirements of the National Electrical Code (ANSI/NFPA 70).

Installations in Canada shall comply with the relevant requirements of the Canadian Electrical Code

A Class 2 power supply unit has to be used for the installation in the USA and Canada.

Description

3

3.1 Configuration

Scope of delivery

The scope of delivery encompasses:

- SITRANS LCS050 point level switch
- Information sheet " *Documents and software*" with:
  - Transmitter serial number

Note
Optional transmitter features are also described in this operating instructions manual. The respective scope of delivery results from the order specification.

Scope of this operating instructions

This operating instructions manual applies to the following transmitter versions:

- Hardware version from 1.0.0
- Software version from 1.2.0

Constituent parts

The SITRANS LCS050 consists of the components:

- Housing with integrated electronics
- Process fitting
- Plug

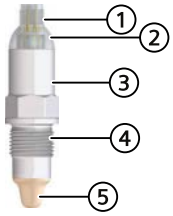

① Plug connection
② 360° status indication
③ Transmitter housing
④ Process fitting

⑤ Transmitter

Figure 3.1 SITRANS LCS050

Nameplate

You will find the type plate on the transmitter housing.

The nameplate contains the most important data for identification and use of the transmitter.

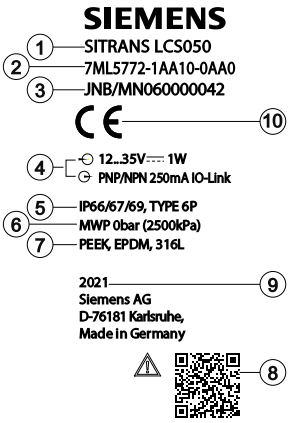

① Product name
② Order number
③ Serial number
④ Voltage supply and signal output
⑤ Protection rating
⑥ Permissible process pressure
⑦ Material wetted parts
⑧ QR code for device documentation
⑨ Fabrication year
⑩ Approvals

Figure 3.2 Layout of the nameplate (example)

Documents and software

Further information can be found on our homepage.

There you will find the documentation and further information about the device.

3.2 Principle of operation

Application area

The SITRANS LCS050 is a capacitive point level transmitter for point level detection

It is designed for industrial use in all areas of process technology and can be used in water-based liquids.

Typical applications are overfill and dry run protection. With a the small transmitter unit, SITRANS LCS050 can be also mounted e.g. in thin pipelines. The transmitter allows use in vessels, tanks and pipes. Thanks to its simple and robust measuring system, SITRANS LCS050 is virtually unaffected by the chemical and physical properties of the medium.

It functions even under difficult conditions such as turbulence, air bubbles, buildup, strong external vibration or changing products.

If a malfunction is detected or in case of voltage supply, the electronics takes on a defined switching status, i.e. the output is open (safe state).

Functional principle

An alternating electric field is generated at the tip of the measuring electrode. If the transmitter is covered with medium, the resonance frequency changes. This change is detected by the electronics and converted into a switching command.

Buildup is ignored to a certain degree and therefore has no influence on the measurement.

3.3 Packaging, transport and storage

Packaging

Your transmitter was protected by packaging during transport. Its capacity to handle normal loads during transport is assured by a test based on ISO 4180.

The packaging consists of environment-friendly, recyclable cardboard. For special versions, PE foam or PE foil is also used. Dispose of the packaging material via specialised recycling companies.

Transport

Transport must be carried out in due consideration of the notes on the transport packaging. Nonobservance of these instructions can cause damage to the device.

Transport inspection

The delivery must be checked for completeness and possible transit damage immediately at receipt. Ascertained transit damage or concealed defects must be appropriately dealt with.

Storage

Up to the time of installation, the packages must be left closed and stored according to the orientation and storage markings on the outside.

Unless otherwise indicated, the packages must be stored only under the following conditions:

- Not in the open
- Dry and dust free
- Not exposed to corrosive media
- Protected against solar radiation
- Avoiding mechanical shock and vibration

Storage and transport temperature

- Storage and transport temperature see chapter " *Supplement - Technical data - Ambient conditions*"
- Relative humidity 20 ... 85 %

3.4 Accessories

The instructions for the listed accessories can be found in the download area on our homepage.

Threaded and hygienic nozzle

Various threaded and hygienic nozzles are available for devices with threaded version.

You can find further information in the "Technical data"

Installing/mounting

4

4.1 General instructions

Ambient conditions

The transmitter is suitable for standard and extended ambient conditions acc. to DIN/EN/IEC/ANSI/ISA/UL/CSA 61010-1. It can be used indoors as well as outdoors.

Process conditions

Note
For safety reasons, the transmitter must only be operated within the permissible process conditions. You can find detailed information on the process conditions in chapter " *Technical data*" of the operating instructions or on the nameplate.

Hence make sure before mounting that all parts of the transmitter exposed to the process are suitable for the existing process conditions.

These are mainly:

- Active measuring component
- Process fitting
- Process seal

Process conditions in particular are:

- Process pressure
- Process temperature
- Chemical properties of the medium
- Abrasion and mechanical influences

Switching point

The SITRANS LCS050 can be mounted in any position. The transmitter must be mounted in such a way that the transmitter is at the height of the requested switching point.

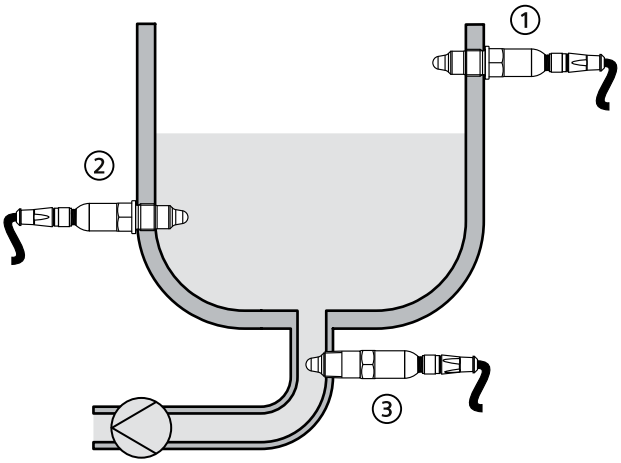

① Upper level detection (max.) as overflow protection
② Lower level detection (min.) as dry run protection
③ Dry run protection (min.) for a pump

Figure 4.1 Installation examples

Note that the switching point varies depending on the type of medium and the mounting position of the transmitter.

Protection against moisture

Protect your transmitter against moisture ingress through the following measures:

- Firmly tighten the plug connector
- Lead the connection cable downwards in front of the plug connector

This applies mainly to outdoor installations, in areas where high humidity is expected (e.g. through cleaning processes) and on cooled or heated vessels.

Handling

The level switch is a measuring device for stationary screw mounting and must be treated accordingly. Damage to the measuring tip will destroy the transmitter.

Use the hexagon above the thread for screwing in.

After mounting, make sure that the process fitting is screwed in correctly and thus securely seals even at maximum process pressure.

4.2 Mounting instructions

Adhesive products

In adhesive and viscous media, the surfaces of the transmitter should protrude into the vessel to avoid buildup. Therefore mounting bosses should not exceed a certain length.

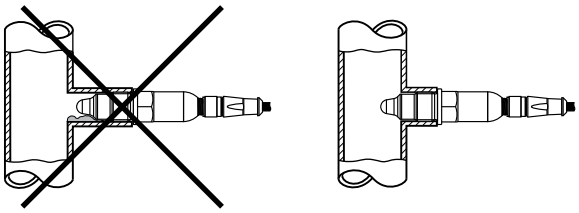

Figure 4.2 Adhesive products

In horizontal pipelines, avoid mounting in the upper or lower area of the pipe.

In the upper part of the pipe cavities can form due to air inclusions.

Solids can settle in the lower pipe area. Both can lead to measurement errors.

In horizontal pipelines, lateral installation is therefore recommended.

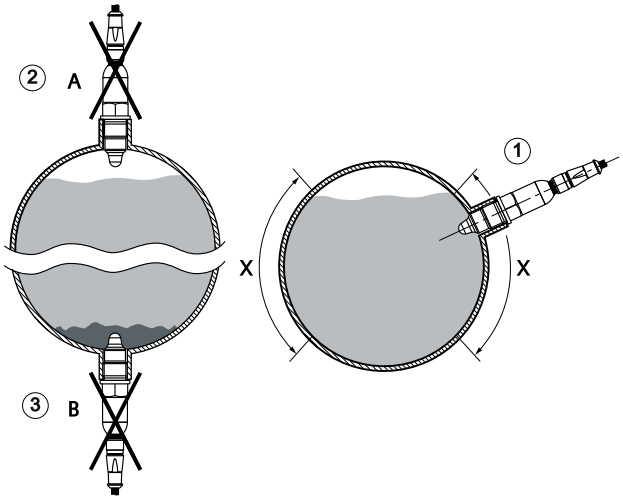

① Recommended mounting area
② Not recommended - danger of air inclusions
③ Not recommended - Danger of buildup

Figure 4.3 Installation in horizontal pipelines

Inflowing medium

If SITRANS LCS050 is mounted in the filling stream, unwanted false measurement signals can be generated. For this reason, mount SITRANS LCS050 at a position in the vessel where no disturbances, e.g. from filling openings, agitators, etc., can occur.

Connecting

5

5.1 Preparing the connection

Safety instructions

Always keep in mind the following safety instructions:

- Carry out electrical connection by trained, qualified personnel authorised by the plant operator
- If overvoltage surges are expected, overvoltage arresters should be installed

⚠ **WARNING**
Only connect or disconnect in de-energized state.

Voltage supply

The data for power supply are specified in chapter " *Technical data*".

Note
Power the transmitter via an energy-limited circuit (power max. 100 W) acc. to IEC 61010-1, e.g.

- Class 2 power supply unit (acc. to UL1310)
- SELV power supply unit (safety extra-low voltage) with suitable internal or external limitation of the output current

Keep in mind the following additional factors that influence the operating voltage:

- Lower output voltage of the power supply unit under nominal load
- Influence of additional transmitters in the circuit (see load values in chapter " *Technical data*")

Connection cable

The transmitter is connected with standard four-wire cable. If electromagnetic interference is expected which is above the test values of EN 61326-1 for industrial areas, shielded cable should be used.

Plug connections

Make sure that the cable and the plug used have the required temperature resistance and fire safety for max. occurring ambient temperature.

When mounting outdoors, on cooled vessels or in moist areas in which cleaning is made with steam or high pressure, it is very important that the plug is screwed on correctly.

5.2 Connecting

Transmitter versions

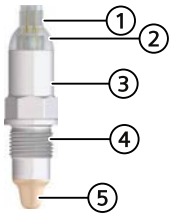

① Plug connection
② 360° status indication
③ Transmitter housing
④ Process fitting
⑤ Transmitter

Figure 5.1 SITRANS LCS050 - M12 x 1 plug

M12 x 1 plug connection

This plug connection requires a prefabricated cable with plug. Depending on the version, protection IP66/IP67 or IP69.

5.3 Wiring plan

For connection to binary inputs of a PLC.

M12 x 1 plug

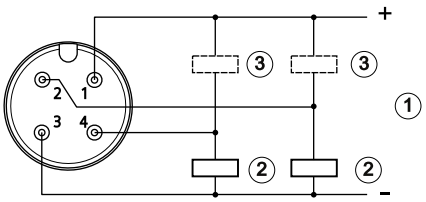

① Voltage supply
② PNP switching
③ NPN switching

Figure 5.2 Wiring plan M12 x 1 plug - Transistor output, three-wire

Contact, plug connector	Function/Polarity
1	Voltage supply/+
2	Transistor output 2
3	Voltage supply/-
4	Transistor output 1/IO-Link

5.4 Switch-on phase

After switching on, the device first carries out a self-check.

The current measured value is then output on the signal cable.

Setup

6

6.1 Indication of the switching status

The switching status of the electronics can be checked via the 360° status indication (LEDs) integrated in the upper part of the housing.

The colours of the 360° status indication have the following meaning: (Default setting)

- Green lights up - power supply connected, transmitter output high-impedance
- Green flashing - Maintenance required
- Yellow lights up - power supply connected, transmitter output low impedance
- Red lights - shortcircuit or overload in the load circuit (transmitter output high-impedance)
- Red flashing - Error at transmitter or electronics (transmitter output high impedance) or device is in simulation

6.2 Function table

The following table provides an overview of the switching conditions depending on the set mode and the level (factory setting).

Coverage	**Switching status** [a] **Output 1**	**Switching status** [b] **Output 2**	**Control lamp** [c]
Covered 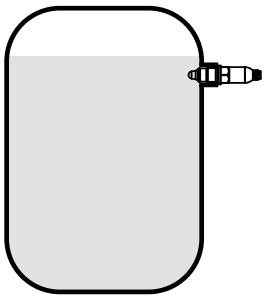	open	closed	Green
Uncovered	closed	open	Yellow

Coverage	Switching status [a] Output 1	Switching status [b] Output 2	Control lamp [c]
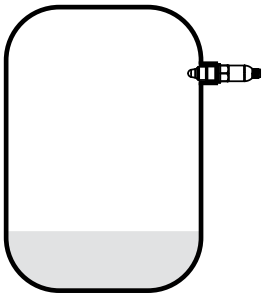			
Covered/Uncovered	open	open	Red

[a] Default setting
[b] Default setting
[c] Output 1

Diagnostics and troubleshooting

7

7.1 Maintenance

Maintenance

If the device is used properly, no special maintenance is required in normal operation.

Cleaning

The cleaning helps that the nameplate and markings on the transmitter are visible.

Take note of the following:

- Use only cleaning agents which do not corrode the housings, nameplate and seals
- Use only cleaning methods corresponding to the housing protection rating

7.2 Rectify faults

Reaction when malfunction occurs

The operator of the system is responsible for taking suitable measures to rectify faults.

Causes of malfunction

The device offers maximum reliability. Nevertheless, faults can occur during operation. These may be caused by the following, e.g.:

- Transmitter
- Process
- Voltage supply
- Signal processing

Fault rectification

The first measure to take is to check the output signal. In many cases, the causes can be determined this way and the faults quickly rectified.

Reaction after fault rectification

Depending on the reason for the fault and the measures taken, the steps described in chapter " *Setup*" must be carried out again or must be checked for plausibility and completeness.

7.3 Diagnosis, fault messages

Checking the switching signal

The 360° status indication on the device indicates the operating status of the device. At the same time it indicates the switching state of the output. This enables simple on-site diagnosis without the need for tools.

Error	Cause	Rectification
Green signal lamp off	Voltage supply interrupted.	Check the voltage supply and the cable connection
	Electronics defective	Exchange the transmitter or send it in for repair
Green signal lamp flashes	Maintenance required	Carry out maintenance
Red signal lamp lights (switching output high-impedance)	Error with the electrical connection	Connect the transmitter according to the wiring plan
	Shortcircuit or overload	Check the electrical connection
	Measuring tip damaged	Check whether the measuring tip is damaged
Red signal lamp flashes (switching output high-impedance)	Transmitter outside the specification	Check the adjustment of the transmitter
	Transmitter is in simulation mode	Terminate simulation mode

7.4 Return procedure

Enclose the delivery note, the return goods delivery note and the decontamination declaration in a clear plastic pouch and attach it firmly to the outside of the packaging. Any devices/replacement parts which are returned without a decontamination declaration will be cleaned at your expense before further processing.

Required forms:

- Delivery note

- Return goods delivery note with the following information: https://www.siemens.com/processinstrumentation/returngoodsnote
  - Product (item description)
  - Number of returned devices/replacements parts
  - Reason for returning the item(s)
- Decontamination declaration
  - https://www.siemens.com/sc/declarationofdecontamination

With this declaration you warrant that the device/replacement part has been carefully cleaned and is free of residues. The device/replacement part does not pose a hazard for humans and the environment.

If the returned device/replacement part has come into contact with poisonous, corrosive, flammable or water-contaminating substances, you must thoroughly clean and decontaminate the device/replacement part before returning it in order to ensure that all hollow areas are free from hazardous substances. Check the item after it has been cleaned.

Any devices/replacement parts returned without a decontamination declaration will be cleaned at your expense before further processing.

7.5 How to proceed if a repair is necessary

You can find an transmitter return form as well as detailed information about the procedure in the download area of our homepage. By doing this you help us carry out the repair quickly and without having to call back for needed information.

In case of repair, proceed as follows:

- Print and fill out one form per transmitter
- Clean the transmitter and pack it damage-proof
- Attach the completed form and, if need be, also a safety data sheet outside on the packaging
- Ask the agency serving you to get the address for the return shipment. You can find the agency on our homepage.

Service and maintenance

8

8.1 Dismounting steps

⚠ WARNING
Before dismounting, be aware of dangerous process conditions such as e.g. pressure in the vessel or pipeline, high temperatures, corrosive or toxic media etc.

Take note of chapters " *Mounting*" and " *Connecting to voltage supply*" and carry out the listed steps in reverse order.

8.2 Disposal

The device is made of recyclable materials. For this reason, it should be disposed of by a specialist recycling company. Observe the applicable national regulations.

Certificates and approvals

9

9.1 Food and pharmaceutical certificates

Versions for use in the food and pharmaceutical industries are available or in preparation.

The corresponding certificates can be found on our homepage.

9.2 EU conformity

The device fulfils the legal requirements of the applicable EU directives. By affixing the CE marking, we confirm the conformity of the transmitter with these directives.

The EU conformity declaration can be found on our homepage.

Electromagnetic compatibility

The transmitters are designed for use in an industrial environment. Nevertheless, electromagnetic interference from electrical conductors and radiated emissions must be taken into account, as is usual with a class A transmitter according to EN 61326-1.

When the device is mounted in metal containers or tubes, the interference resistance requirements of IEC/EN 61326 for "Industrial environment" and the NAMUR recommendation EMC (NE21) are met.

If the device is to be used in other environments, the electromagnetic compatibility to other devices must be ensured by suitable measures.

When using communication via IO-Link, the requirements of IEC/EN 61131-9 are fulfilled.

9.3 Environment management system

Protection of the environment is one of our most important duties. That is why we have introduced an environment management system with the goal of continuously improving company environmental protection. The environment management system is certified according to DIN EN ISO 14001. Please help us fulfil this obligation by observing the environmental instructions in chapters " *Packaging, transport and storage*", " *Disposal*" of these operating instructions.

Technical data and dimensions

10

10.1 Technical data

Note for approved transmitters

The technical data in the respective safety instructions which are included in delivery are valid for approved transmitters (e.g. with Ex approval). These data can differ from the data listed herein, for example regarding the process conditions or the voltage supply.

All approval documents can be downloaded from our homepage.

Materials and weights

Materials, wetted parts	
Transmitter tip	PEEK, polished
Device seal - Standard version	FKM
Device seal - Hygienic version	EPDM
Process seal	Klingersil C-4400
Process fittings	316L
Materials, non-wetted parts	
Housing	316L and plastic (Polycarbonate)
Device seal - Hygienic design AC and AM [a]	EPDM
Weight	approx. 200 g (0.441 lbs)

[a] not in contact with the medium

General data

Process fittings	
Pipe thread, cylindrical (DIN 3852-A)	G½, G¾, G1
Pipe thread, conical (ASME B1.20.1)	½ NPT, ¾ NPT, 1 NPT
Metric fine thread, cylindrical	M 24 x 1.5
Threaded adapter (ISO 228-1)	G½, G1
Threaded and hygienic adapter	
Standard hygienic adapter	G½
Max. torque - process fitting	
Thread G½, ½ NPT	50 Nm (37 lbf ft)

Thread G¾, ¾ NPT	75 Nm (55 lbf ft)
Thread G1, 1 NPT	100 Nm (73 lbf ft)
Hygienic adapter	20 Nm (15 lbf ft)
Surface quality	Ra < 0.76 µm (3.00-5 in)

Measurement accuracy

Hysteresis	approx. 1 mm (0.04 in)
Switching delay	approx. 500 ms (on/off)

Ambient conditions

Ambient temperature on the housing	-40 ... +70 °C (-40 ... +158 °F)
Storage and transport temperature	-40 ... +80 °C (-40 ... +176 °F)
Relative humidity	20 ... 85 %

Mechanical environmental conditions

Sinusoidal vibrations	4M8 (5 g) at 4 ... 200 Hz according to EN 60068-2-6 (vibration with resonance)
Impacts	50 g, 2.3 ms according to EN 60068-2-27 (mechanical shock)
Impact resistance	IK05 acc. to IEC 62262

Process conditions

Process pressure	-1 ... 25 bar/-100 ... 2500 kPa (-14.5 ... 363 psig)
Process temperature	-20 ... +100 °C (-4 ... +212 °F)
Vapour stratification up to 1 h	+135 °C (+275 F)
Dielectric constant	≥ 2.0

Indication (NE 107)

360° status indication (LED)	
Green	Power supply on - Output 1 open
Yellow	Power supply on - Output 1 closed
Red	Voltage supply on - failure/simulation

Output variable - Transistor output

Output	Transistor (PNP/NPN)
Load current	max. 250 mA (output, permanently short-circuit proof)
Voltage loss	< 3 V

Switching voltage	< 34 V DC
Blocking current	< 10 µA

Measuring cell temperature

Range	-40 ... +115 °C (-40 ... +239 °F)
Resolution	< 0.2 K
Deviation	±3 K
Output of the temperature values via [a]	IO-Link

[a] Depending on the transmitter version

Voltage supply

Operating voltage	12 ... 35 V DC
Max. power consumption	1 W
Reverse voltage protection	Integrated
Max. power consumption	1 W

Electrical protective measures

Potential separation	Electronics potential free up to 500 V AC
Altitude above sea level	up to 5000 m (16404 ft)
Overvoltage category	I
Protection rating (IEC 61010-1)	III
Pollution degree	4

Output variable - Transistor output/IO-Link

Output signal	Transistor output PNP/NPN
Output signal	IO-Link acc. to IEC 61131-9
Connection technology	Three-wire
Load current	max. 250 mA (output, permanently short-circuit proof)
Overload resistance	yes
Short-circuit resistance	Permanently
Switching voltage	< 34 V DC
Voltage loss	< 3 V
Inverse current PNP	< 10 µA
Inverse current NPN	< 25 µA
Switching time	< 10 ms
Max. cable length to the IO-Link master	20 m (66 ft)
Output	Transistor (PNP/NPN)

10.2 Device communication IO-Link

In the following, the necessary device-specific details are shown. You can find further information of IO-Link on www.io-link.com [https://www.io-link.com].

IO-Link specification: Revision 1.1

SIO mode: Yes

Speed: COM2 38.4 kBaud

Min. cycle time 4.0 ms

Length process data word: 32 Bit

IO-Link Data Storage: Yes

Block parameter adjustment: Yes

Byte	Parameter	HexCode	Note, value
0	-	-	-
1	MasterCycleTime	-	-
2	MinCycleTime	0x28	4 ms
3	M-SequenceCapability	0x2B	Frametypes, SIO-Mode, ISDU
4	Revision ID	0x11	IO-Link Revision 1.1
5	Input process data length	0xC3	4 Byte Länge (SIO-Mode verfügbar)
6	Output process data length	0x00	Not available
7, 8	VendorID	0x002A	98
9, 10, 11	DeviceID	0x0B1102	1024

Configuration

Bit	31 (MSB)	...	16	15	...	2	1	0 (LSB)
Transmitter	X-value 0.1 % (frequency)			Temperature in °C, resolution 0.1 K			Out2	Out1

Formats

	Value	Type
Out1	1 Bit	Boolean
Out2	1 Bit	Boolean
Temperature	14 Bit	Integer
X-value	16 Bit	Integer

Events

	HexCode	Type
6202	0x183A	FunctionCheck
6203	0x183B	Maintenance
6204	0x183C	OutOfSpec
6205	0x183D	Failure

Device data can be parameters, identification data and diagnostic information. They are exchanged acyclically and on request of the IO-Link master. Device data can be written to the transmitter (write) or read from the device (read). The ISDU (Indexed Service Data Unit) determines, among other things, whether the data is read or written.

Designation	ISDU (dez)	ISDU (hex)	Size (Byte)	Data type	Access	Value
Device Access	12	0x000C	-	-	RW	-
Profile Identification	13	0x000D	2	unsigned8[2]	RO	0x40, 0x00
PD-Descriptor	14	0x000E	12	unsigned8[12]	RO	0x01, 0x01, 0x00, 0x01, 0x01, 0x01, 0x03, 0x0E, 0x02, 0x03, 0x0E, 0x10
Vendor Name	16	0x0010	31	String	RO	Siemens AG
VendorText	17	0x0011	31	String	RO	www.siemens.com
Product Name	18	0x0012	31	String	RO	SITRANS LCS
Product ID	19	0x0013	31	String	RO	SITRANS LCS050
Produc tText	20	0x0014	31	String	RO	Level switch
Serial Number	21	0x0015	16	String	RO	-
Hardware Revision	22	0x0016	20	String	RO	-
Software Revision	23	0x0017	20	String	RO	-
Application Specific Tag	24	0x0018	Max. 31	String	RW	Transmitter
Function Tag	25	0x0019	Max. 31	String	RW	-
Location Tag	26	0x001A	Max. 31	String	RW	-
Device Status	36	0x0024	1	unsigned8[2]	RO	-
Detailed Device Status	37	0x0025	12	unsigned8[12]	RO	-
PDin	40	0x0028	4	-	RO	see process word

Designation	ISDU (dez)	ISDU (hex)	Size (Byte)	Data type	Access	Value range
Measurement loop name (TAG)	256	0x0100	20	String	RW	-
Application	257	0x0101	1	unsigned8	RW	0 = User defined 1 = Standard

Designation	ISDU (dez)	ISDU (hex)	Size (Byte)	Data type	Access	Value range
Switching point (SP1)	258	0x0102	4	Float	RW	-
Reset point (RP1)	259	0x0103	4	Float	RW	-
Switching delay (DS1)	260	0x0104	4	Float	RW	-
Reset delay (DR1)	261	0x0105	4	Float	RW	-
Switching point (FH1)	262	0x0106	4	Float	RW	-
Reset point (FL1)	263	0x0107	4	Float	RW	-
Switching delay (DS1)	264	0x0108	4	Float	RW	-
Reset delay (DR1)	265	0x0109	4	Float	RW	-
Switching point (SP2)	266	0x010A	4	Float	RW	-
Reset point (RP2)	267	0x010B	4	Float	RW	-
Switching delay (DS2)	268	0x010C	4	Float	RW	-
Reset delay (DR2)	269	0x010D	4	Float	RW	-
Switching point (FH2)	270	0x010E	4	Float	RW	-
Reset point (FL2)	271	0x010F	4	Float	RW	-
Switching delay (DS2)	272	0x0110	4	Float	RW	-
Reset delay (DR2)	273	0x0111	4	Float	RW	-
Transistor function (P-N)	274	0x0112	1	unsigned8	RW	0 = pnp, 1 = npn
Function output (OU1)	275	0x0113	1	unsigned8	RW	0 = HNO, 1=HNC 2 = FNO, 3=FNC
Function output 2 (OU2)	276	0x0114	1	unsigned8	RW	0 = HNO, 1=HNC 2 = FNO, 3=FNC
Temperature unit (TMP)	291	0x0123	4	Float	RW	1001 = °C 1002 = °F
Device status acc. to NE107	294	0x0126	1	Unsigned8	RO	0 = Good 1 = Function Check 2 = Maintenance required 3 = Out of Specification 4 = Failure
Device status	295	0x0127	19	Unsigned16	RO	-

Designation	ISDU (dez)	ISDU (hex)	Size (Byte)	Data type	Access	Value range
Counter for change of parameters (PCO)	296	0x0128	4	Unsigned32	RO	-
Actual electronics temperature	297	0x0129	4	Float	RO	-
Min. electronics temperature	299	0x012B	4	Float	RO	-
Max. electronics temperature	300	0x012C	4	Float	RO	-
Actual measuring cell temperature	301	0x011C	4	Float	RO	-
Min. measuring cell temperature	302	0x011D	4	Float	RO	-
Max. measuring cell temperature	303	0x011E	4	Float	RO	-
Actual resonance frequency	304	0x0130	4	Float	RO	-
Min. resonance frequency	305	0x0131	4	Float	RO	-
Max. resonance frequency	306	0x0132	4	Float	RO	-
Probe	307	0x0133	2	Unsigned16	RO	0 = Not Covered 256 = Covered 512 = Covered inside Window 768 = Covered outside Window
Output	308	0x0134	2	Unsigned16	RO	0 = Open 1 = Closed
Output 2	309	0x0135	2	Unsigned16	RO	0 = Open 1 = Closed
Device name	310	0x0136	19	String	RO	-
Serial number	311	0x0137	16	String	RO	-
Hardware version	312	0x0138	19	String	RO	-
Software version	313	0x0139	19	String	RO	-
Device revision	314	0x013A	2	Unsigned16	RO	-
Simulation switching output	315	0x013B	1	Unsigned8	RW	0 = Off 1= On
Simulation value output	316	0x013C	2	Unsigned16	RW	0 = Open 1= Closed
Simulation switching output 2	317	0x013D	1	Unsigned8	RW	0 = Off 1= On
Simulation value output	318	0x013E	2	Unsigned16	RW	0 = Open 1= Closed

Designation	ISDU (dez)	ISDU (hex)	Size (Byte)	Data type	Access	Value range
Device status detailed status	319	0x013F	4	Unsigned32	RO	-

Designation	ISDU (dez)	ISDU (hex)	Access
Factory Reset	130	0x082	WO
Reset Pointer - Resonance Frequency	161	0x0A1	WO
Reset Pointer - Measuring Cell Temperature	163	0x0A3	WO
Reset Pointer - Electronic Temperature	164	0x0A4	WO

10.3 Dimensions

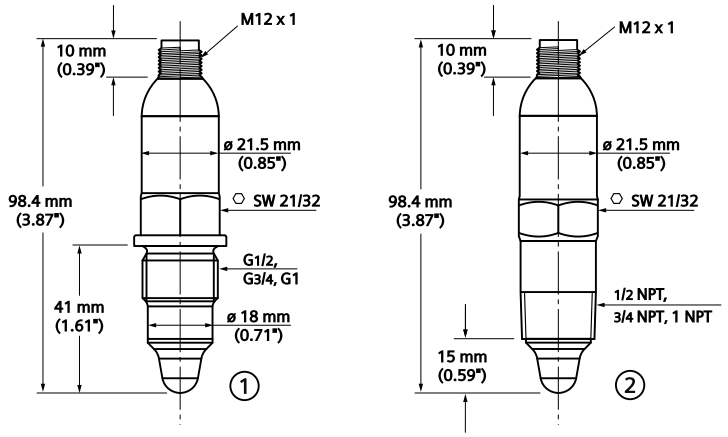

① Thread G½, G¾, G1 (DIN ISO 228/1) with M12 x 1 plug connection
② Thread ½ NPT, ¾ NPT, 1 NPT with M12 x 1 plug connection

Figure 10.1 SITRANS LCS050, standard version - thread

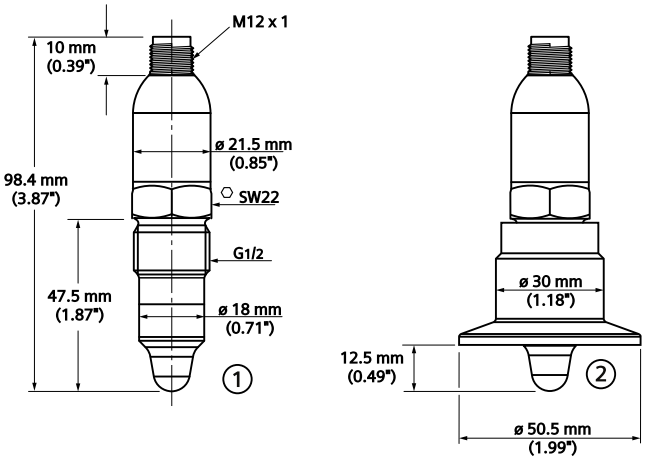

① Thread G½ for hygienic threaded adapter (DIN ISO 228/1) with M12 x 1 plug connection

② SITRANS LCS050, hygienic version in threaded adapter, Clamp

Figure 10.2 SITRANS LCS050, hygienic version - Thread

Keep in mind that the total length is extended by the plug connection.

10.4 Licensing information for open source software

Open source software components are also used in this device. A documentation of these components with the respective license type, the associated license texts, copyright notes and disclaimers is available.

10.5 Trademark

All the brands as well as trade and company names used are property of their lawful proprietor/originator.

Further Information

Process Automation
https://www.siemens.com/processautomation

Industry Online Support (service and support)
https://support.industry.siemens.com

Industry Mall
https://mall.industry.siemens.com

Siemens AG
Digital Industry
Process Automation
Postfach 48 48
90026 NÜRNBERG
GERMANY