SIEMENS

Milltronics

Integrators SF500

Operating Instructions

7MH7156 (SF500)

Introduction 1

Safety Notes 2

Description 3

Installing/mounting 4

Commissioning 5

Recalibration 6

Operating 7

PID Control 8

Batching 9

Communications 10

Parameter assignment 11

Diagnostics and troubleshooting 12

Technical specifications 13

Appendix A

Product documentation and support B

03/2021

A5E33489473-AF

Legal information

Warning notice system

This manual contains notices you have to observe in order to ensure your personal safety, as well as to prevent damage to property. The notices referring to your personal safety are highlighted in the manual by a safety alert symbol, notices referring only to property damage have no safety alert symbol. These notices shown below are graded according to the degree of danger.

⚠ DANGER
indicates that death or severe personal injury **will** result if proper precautions are not taken.

⚠ WARNING
indicates that death or severe personal injury **may** result if proper precautions are not taken.

⚠ CAUTION
indicates that minor personal injury can result if proper precautions are not taken.

NOTICE
indicates that property damage can result if proper precautions are not taken.

If more than one degree of danger is present, the warning notice representing the highest degree of danger will be used. A notice warning of injury to persons with a safety alert symbol may also include a warning relating to property damage.

Qualified Personnel

The product/system described in this documentation may be operated only by **personnel qualified** for the specific task in accordance with the relevant documentation, in particular its warning notices and safety instructions. Qualified personnel are those who, based on their training and experience, are capable of identifying risks and avoiding potential hazards when working with these products/systems.

Proper use of Siemens products

Note the following:

⚠ WARNING
Siemens products may only be used for the applications described in the catalog and in the relevant technical documentation. If products and components from other manufacturers are used, these must be recommended or approved by Siemens. Proper transport, storage, installation, assembly, commissioning, operation and maintenance are required to ensure that the products operate safely and without any problems. The permissible ambient conditions must be complied with. The information in the relevant documentation must be observed.

Trademarks

All names identified by ® are registered trademarks of Siemens AG. The remaining trademarks in this publication may be trademarks whose use by third parties for their own purposes could violate the rights of the owner.

Disclaimer of Liability

We have reviewed the contents of this publication to ensure consistency with the hardware and software described. Since variance cannot be precluded entirely, we cannot guarantee full consistency. However, the information in this publication is reviewed regularly and any necessary corrections are included in subsequent editions.

Siemens AG
Digital Industries
Postfach 48 48
90026 NÜRNBERG
GERMANY

Document order number: A5E33489473
Ⓟ 04/2021 Subject to change

Copyright © Siemens AG 2021.
All rights reserved

Table of contents

1 Introduction ... 9

2 Safety Notes ... 10

3 Description ... 11

4 Installing/mounting ... 12

4.1 Dimensions ... 13

4.2 Layout ... 14

4.3 Optional Plug-ins ... 16
4.3.1 SmartLinx Module ... 16
4.3.2 mA I/O board ... 16
4.3.3 LVDT Conditioner Card ... 17

4.4 Optional Components and their locations ... 18

4.5 Interconnection ... 18
4.5.1 System Diagram ... 19

4.6 Flowmeter ... 20
4.6.1 One Load Cell ... 20
4.6.2 Two Load Cell ... 21
4.6.3 LVDT ... 22

4.7 Auxiliary Inputs ... 23

4.8 Auto Zero ... 23

4.9 RS-232 (Port 1) ... 24
4.9.1 Printers ... 24
4.9.2 Computers and Modems ... 24

4.10 Remote Totalizer ... 25

4.11 mA Output 1 ... 25

4.12 Relay Output ... 25

4.13 RS-485 (Port 2) ... 26
4.13.1 Daisy Chain ... 26
4.13.2 Terminal Device ... 26

4.14 Power Connections ... 28

4.15 mA I/O Board ... 29

4.16 Installing/Replacing the Memory Backup Battery ... 30

5 Commissioning ... 31

5.1 Keypad ... 31

5.2 PROGRAM Mode ... 32
5.2.1 Program Mode Display ... 32

5.2.2 To enter PROGRAM mode: 32
5.2.3 RUN Mode 35

5.3 Initial Start Up 35
5.3.1 Power Up 35
5.3.2 Programming 35

5.4 Load Cell Balancing 39
5.4.1 Zero Calibration 41
5.4.2 Span Calibration 42
5.4.3 RUN Mode 44

6 Recalibration 45

6.1 Material Tests 45
6.1.1 % Change 45
6.1.1.1 Access P019 and enter EDIT mode 46
6.1.2 Material Test 47

6.2 Design Changes 50

6.3 Recalibration 50
6.3.1 Routine Zero 50
6.3.2 Initial Zero 52
6.3.3 Direct Zero 53
6.3.4 Auto Zero 53
6.3.5 Routine Span 54
6.3.6 Initial Span 56
6.3.7 Direct Span 57
6.3.8 Multispan 58
6.3.8.1 Programming 60

6.4 Online Calibration 62
6.4.1 Online Calibration feature 63

6.5 Factoring 67

6.6 Linearization 69

7 Operating 72

7.1 Rate Sensing 72

7.2 Moisture Compensation 72

7.3 Damping 72

7.4 mA I/O (0/4 – 20 mA) 73

7.5 Relay Output 74

7.6 Totalization 74
7.6.1 Internal totalizers 75
7.6.2 External totalizers 75

8 PID Control 77

8.1 Hardware 77

8.2 Connections 77
8.2.1 Setpoint Controller – Rate Control 78
8.2.2 Setpoint Controller – Rate and Additive Control 80

8.2.3 Setpoint Controller – Master/Slave Control ... 82
8.2.4 SF500 - Master ... 83
8.2.5 SF500 - Slave ... 83

8.3 Setup and Tuning ... 84
8.3.1 Proportional Control (Gain), P ... 84
8.3.2 Integral Control (Automatic Reset), I ... 84
8.3.3 Derivative Control (Pre-Act or Rate), D ... 85
8.3.4 Feed Forward Control, F ... 85

8.4 PID Setup and Tuning ... 86
8.4.1 Initial Start Up ... 86

8.5 Programming ... 89

9 Batching ... 93

9.1 Connections ... 94
9.1.1 Typical Ladder Logic ... 94

9.2 Programming ... 95

9.3 Operation ... 95
9.3.1 Pre-act Function ... 96

10 Communications ... 97

10.1 SF500 and SmartLinx® ... 97

10.2 Connection ... 98
10.2.1 Wiring Guidelines ... 98

10.3 Configuring Communication Ports ... 99
10.3.1 P770 Serial protocols ... 99
10.3.2 P771 Protocol address ... 100
10.3.3 P772 Baud Rate ... 100
10.3.4 P773 Parity ... 100
10.3.5 P774 Data bits ... 101
10.3.6 P775 Stop bits ... 101
10.3.7 P778 Modem attached ... 101
10.3.8 P779 Modem idle time ... 102
10.3.9 P780 RS-232 Transmission interval ... 102
10.3.10 P781 Data message ... 102
10.3.11 P799 Communications Control ... 103

10.4 Dolphin Protocol ... 104

10.5 Modbus RTU/ASCII Protocol ... 105
10.5.1 How Modbus Works ... 105
10.5.2 Modbus RTU vs. ASCII ... 105
10.5.3 Modbus Format ... 106
10.5.4 Modbus Register Map ... 106
10.5.5 Modbus Register Map (cont'd) ... 110

10.6 Modems ... 117
10.6.1 Example Setup ... 118

10.7 Error Handling ... 120

11 Parameter assignment ... 122

11.1 Start Up (P001 to P017) ... 122
11.1.1 P001 Language ... 122
11.1.2 P002 Test Reference Selection ... 122
11.1.3 P003 Number of Load Cells ... 123
11.1.4 P004 Rate Measurement System ... 123
11.1.5 P005 Design Rate Units ... 123
11.1.6 P008 Date ... 123
11.1.7 P009 Time ... 124
11.1.8 P011 Design Rate ... 124
11.1.9 P017 Test Rate ... 124
11.1.10 P019 Manual Span Adjust ... 124
11.1.11 P080 Display Damping ... 124
11.1.12 P081 Display Scroll Mode ... 125

11.2 Relay/Alarm Function (P100 – P117) ... 125
11.2.1 P100 Relay Function ... 125
11.2.2 P101 High Alarm / Deviation Alarm ... 126
11.2.3 P102 Low Alarm ... 126
11.2.4 P107 Relay Alarms ... 126
11.2.5 P117 Relay Dead Band ... 126
11.2.6 P118 Relay Logic ... 127
11.2.7 P119 Relay Override ... 127

11.3 mA I/O Parameters (P200 - P220) ... 127
11.3.1 P200 mA Output Range ... 128
11.3.2 P201 mA Output Function ... 128
11.3.3 P204 mA Output Average ... 128
11.3.4 P212 mA Output Minimum ... 128
11.3.5 P213 mA Output Maximum ... 128
11.3.6 P214 4 mA Output Trim ... 129
11.3.7 P215 20 mA Output Trim ... 129
11.3.8 P220 mA Output Damping ... 129
11.3.9 P250 mA Input Range ... 129
11.3.10 P255 mA Input Function ... 129
11.3.11 P261 4 mA Input Trim ... 130
11.3.12 P262 20 mA Input Trim ... 130
11.3.13 P270 Auxiliary Input Function ... 130

11.4 Calibration Parameters (P295 - P360) ... 132
11.4.1 P295 Load Cell Balancing ... 132
11.4.2 P341 Days Of Service ... 133
11.4.3 P350 Calibration Security ... 133

11.5 Online Calibration Options (P355 to P358) ... 133
11.5.1 P355 Online Calibration Feature ... 133
11.5.2 P356 Online Calibration Reference Weight ... 134
11.5.3 P357 Online Calibration Limits ... 134
11.5.4 P358 Online Calibration Activation ... 134
11.5.5 P359 Factoring ... 134
11.5.6 P360 Calibration Duration ... 134
11.5.7 P365 Multispan ... 135
11.5.8 P367 Direct Zero Entry ... 135
11.5.9 P368 Direct Span Entry ... 135
11.5.10 P370 Zero Limit Deviation % ... 135

11.5.11 P377 Initial Zero ... 136
11.5.12 P388 Initial Span ... 136

11.6 Linearization Parameters (P390 – P392) ... 136
11.6.1 P390 Linearizer ... 136
11.6.2 P391 Linearizer Rate Points ... 136
11.6.3 P392 Linearizer Compensation % ... 137
11.6.4 P398–01 Moisture Content ... 137
11.6.5 P398–02 Moisture Content ... 137

11.7 Proportional Integral Derivative (PID) Control ... 137
11.7.1 P400 PID System ... 137
11.7.2 P401 PID Update Time ... 138
11.7.3 P402 PID Process Value Source ... 138
11.7.4 P405 Proportional Term ... 138
11.7.5 P406 Integral Term ... 138
11.7.6 P407 Derivative Term ... 139
11.7.7 P408 Feed Forward Term ... 139
11.7.8 P410 Manual Mode Output ... 139
11.7.9 P414 Setpoint Configuration ... 139
11.7.10 P415 Local Set Point Value ... 140
11.7.11 P416 External Setpoint ... 140
11.7.12 P418 Remote Setpoint Ratio ... 140

11.8 Batch Control (P560 – P568) ... 140
11.8.1 P560 Batch Mode Control ... 140
11.8.2 P564 Batch Setpoint ... 141
11.8.3 P566 Batch Pre-Warn ... 141
11.8.4 P567 Batch Pre-Warn Setpoint ... 141
11.8.5 P568 Batch Pre-Act ... 141
11.8.6 P569 Manual Batch Pre-Act Amount ... 142
11.8.7 P598 Span Adjust Percentage ... 142

11.9 Totalization (P619 – P648) ... 142
11.9.1 P619 Totalling Dropout ... 142
11.9.2 P620 Display Zero Dropout ... 142
11.9.3 P621 mA Zero Dropout ... 142
11.9.4 P631 Totalizer Resolution ... 143
11.9.5 P634 Communication Totalizer Resolution ... 143
11.9.6 P635 Verification Totalizer ... 144
11.9.7 P638 External Totalizer Resolution ... 145
11.9.8 P643 External Contact Closure ... 145
11.9.9 P647 Totalizer Display ... 146
11.9.10 P648 Totalizer Reset, Internal ... 146
11.9.11 P699 ECal mV Span ... 146
11.9.12 P735 Back Light ... 146
11.9.13 P739 Time Zone ... 146

11.10 Communication (P750 – P799) ... 147
11.10.1 P742 Word Order Parameter ... 147
11.10.2 P750 – P769 SmartLinx® Module Specific Parameters ... 147
11.10.3 P770 – P789 Local Port Parameters ... 147
11.10.4 SmartLinx® Hardware Testing ... 147
11.10.5 P790 Hardware Error ... 148
11.10.6 P791 Hardware Error Code ... 148

11.10.7 P792 Hardware Error Count ... 148
11.10.8 P794 SmartLinx Module Type ... 148
11.10.9 P795 SmartLinx Protocol ... 148
11.10.10 P799 Communications Control ... 149

11.11 Test and Diagnostic (P900 – P951) ... 149
11.11.1 P900 Software Revision ... 149
11.11.2 P901 Memory Test ... 149
11.11.3 P911 mA Output Test ... 149
11.11.4 P914 mA Input Value ... 150
11.11.5 P931 Running Totalizer ... 150
11.11.6 P940 Load Cell mV Signal Test ... 150
11.11.7 P943 Load Cell A/D Reference ... 150
11.11.8 P948 Error Log ... 151
11.11.9 P950 Zero Register ... 151
11.11.10 P951 Span Register ... 151
11.11.11 P999 Master Reset ... 151

12 Diagnostics and troubleshooting ... 152

12.1 Generally ... 152

12.2 Specifically ... 152

13 Technical specifications ... 155

A Appendix ... 158

A.1 Appendix I ... 158
A.1.1 Memory Backup ... 158
A.1.2 Software Updates ... 158
A.1.3 Calibration Criteria ... 158

A.2 Appendix II: Software Revision History ... 159

B Product documentation and support ... 164

B.1 Product documentation ... 164

B.2 Technical support ... 165

Glossary ... 166

Index ... 170

Introduction

1

Note

- The Milltronics SF500 is to be used only in the manner outlined in this instruction manual.
- These products are intended for use in industrial areas. Operation of this equipment in a residential area may cause interference to several frequency based communications.

This instruction manual covers the operation, installation, and maintenance of Milltronics SF500.

Please refer to this manual for proper installation and operation of your SF500 solids flowmeter integrator. As the SF500 must be connected to a solids flowmeter, refer to the flowmeter's manual as well.

The manual is designed to help you get the most out of your SF500, and it provides information on the following:

- How to install the unit
- How to program the unit
- How to operate the keypad and read the display
- How to do an initial Start Up
- How to optimize and maintain accurate operation of the unit
- Outline diagrams
- Wiring diagrams
- Parameter values
- Parameter uses
- MODBUS® register mapping
- Modem configuration

We always welcome suggestions and comments about manual content, design, and accessibility. Please direct your comments to AUTOHOTSPOT.

For the complete library of Siemens manuals, go to Siemens Weighing Systems (www.siemens.com/weighing).

See also

Technical publications (pi-documentation-service.industry@siemens.com)

Safety Notes

2

⚠ WARNING
WARNING means that failure to observe the necessary precautions can result in death, serious injury, and/or considerable material damage.

Note

means important information about the product or that part of the operating manual.

Description

3

The Milltronics SF500 is a full-featured integrator for use with solids flowmeters. The SF500 processes the signal from the flowmeter and calculates values for the rate of material flow and totalization. These values are displayed on the local LCD (liquid crystal display, or as output in the form of analog mA, alarm relay, or remote totalization.

Milltronics SF500 features

The SF500 is programmable

- Two remote totalizer contacts
- Five programmable relays
- Five programmable discrete inputs
- One programmable isolated mA output for rate (standard)
- Two programmable isolated mA input, for PID control
- Two programmable isolated mA output for rate, PID control, or online calibration

The SF500 is flexible

- Rate linearization
- Auto zero
- PID control*
- Batch control
- Moisture compensation*
- Multispan operation
- Online calibration*

* PID control, Moisture compensation, and Online calibration requires the optional mA I/O board.

The SF500 can communicate

There are three communication ports on the SF500, as standard. Use the two RS-232 ports for Siemens Dolphin Plus and Modbus protocol. Link the RS-485 port to either a PLC or a computer. The SF500 also supports Siemens SmartLinx® and networks with popular industrial communication systems.

The SF500 is upgradeable

Enhance basic features with the following:

- mA I/O board
- SmartLinx module

Installing/mounting

4

Note

- Installation shall only be performed by qualified personnel and in accordance with local governing regulations.
- This product is susceptible to electrostatic shock. Follow proper grounding procedures.

4.1 Dimensions

Note

Non-metallic enclosure does not provide grounding between connections. Use grounding type bushings and jumpers.

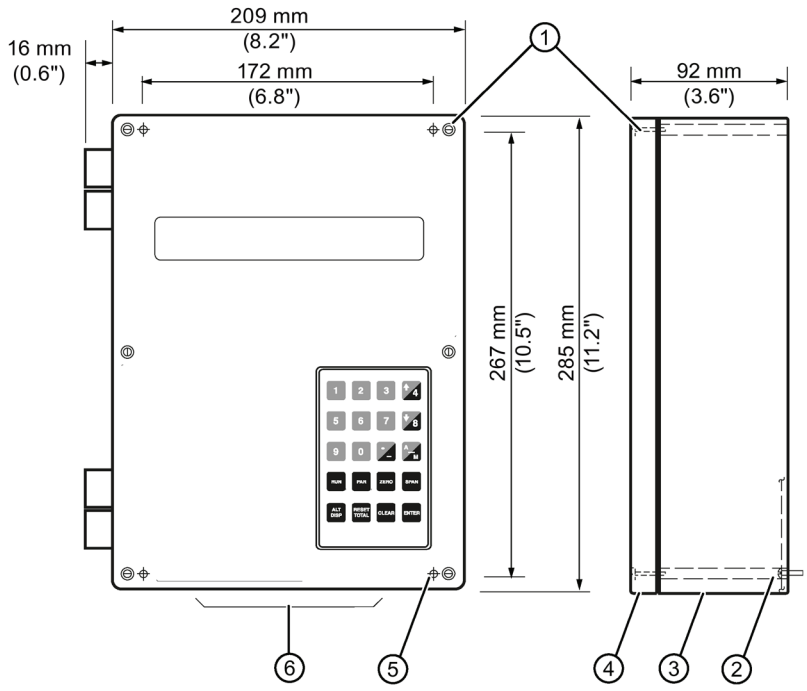

① Lid screws (6 places)
② Customer mounting screw
③ Enclosure
④ Lid
⑤ Mounting hole (4 places)
⑥ Conduit entry area. Recommend drilling the enclosure with a hole saw and using suitable cable glands to maintain ingress rating.

4.2 Layout

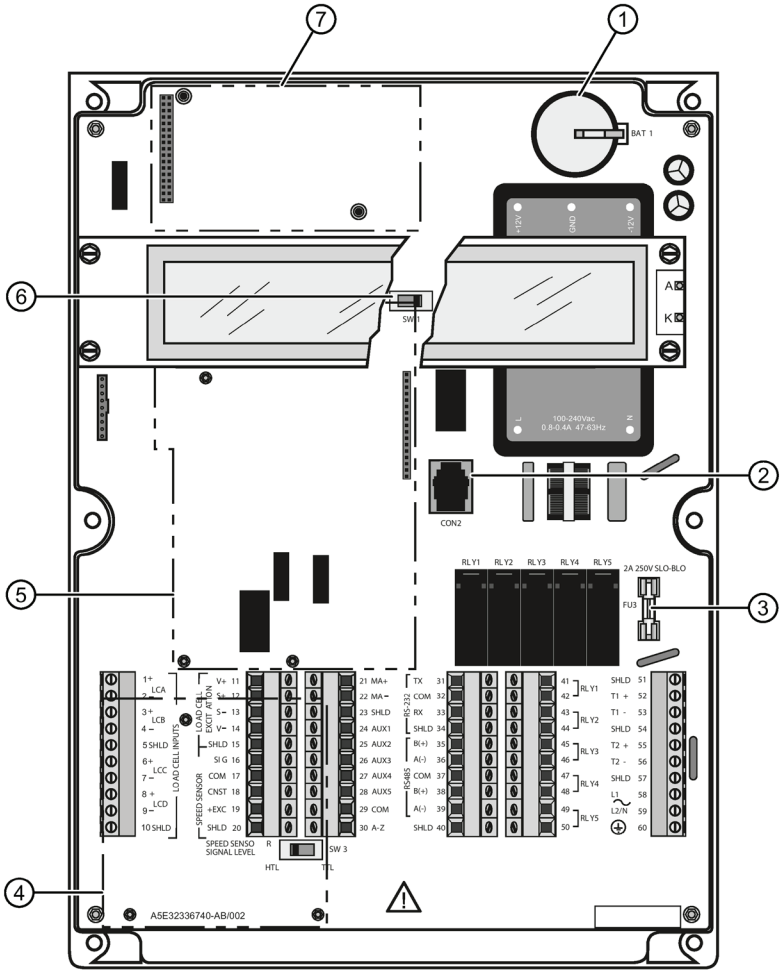

① Battery, memory back up
② Port 3 (RJ-11)
③ Fuse FU3
④ Optional LVDT conditioner card[2)]
⑤ Optional Analog I/O board
⑥ Certification switch
⑦ Optional SmartLinx module[1)]

[1)] To reduce communication interference, route SmartLinx® cable along right side.

[2)] The LVDT card must be removed to access terminals below it.

Note

The Security Switch is shown in its normal position (to the right). When on the left, it locks out most keypad functions. See P350 Calibration Security (Page 133).

WARNING

- All field wiring must have insulation suitable for at least 250 V.
- DC input terminals shall be supplied from a source providing electrical isolation between the input and output, in order to meet applicable safety requirements of IEC 61010-1.
- Relay contact terminals are for use with equipment having no accessible live parts and wiring having insulation suitable for at least 250 V. The maximum allowable working voltage between adjacent relay contact shall be 250 V.
- The non-metallic enclosure does not provide grounding between conduit connections. Use grounding type bushings and jumpers.

Mounting the Enclosure

1. Remove the lid screws and open the lid to reveal the mounting holes.
2. Mark and drill four holes in the mounting surface for the four screws (customer supplied).
3. Fasten with a long screwdriver.

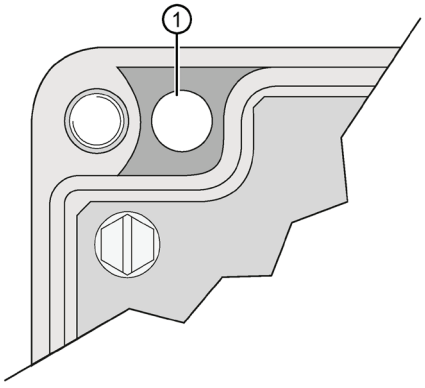

① Mounting holes

Note

- Recommended mounting: directly to wall or to electrical cabinet back panel
- Recommended mounting screws: #6
- If alternate mounting surface is used, it **MUST** be able to support four times the weight of the unit.

4.3 Optional Plug-ins

4.3.1 SmartLinx Module

SF500 is software/hardware ready to accept the optional Siemens SmartLinx communications module that provides an interface to one of several popular industrial communications systems.

SF500 may be shipped to you without a SmartLinx module, for installation at a later date.

If you are ready to install your SmartLinx module, or want to change it, please follow the instructions as outlined.

Installation

1. Isolate power and voltages applied to the SF500.
2. Open the lid.
3. Install the module by mating the connectors and secure in place using the two screws provided.
4. Route communication cable to SmartLinx module along the right side of the enclosure wall. This route will reduce communication.

   Note

   Refer to the SmartLinx documentation for any required hardware settings prior to closing the lid.

5. Close the lid.
6. Apply power and voltage to the SF500.

Refer to

- SmartLinx Module in the Technical specifications (Page 155)
- *P750 – P769 SmartLinx Module Specific Parameters* in this manual under P750 – P769 SmartLinx® Module Specific Parameters (Page 147)
- the SmartLinx manual for wiring

4.3.2 mA I/O board

SF500 is software/hardware ready to accept the optional mA I/O board. The mA I/O board provides 2 programmable 0/4 to 20 mA outputs, 2 programmable 0/4 to 20 mA inputs and a nominal 24 V DC supply for loop powered devices.

SF500 may be shipped to you without an mA I/O board, for installation at a later date.

If you are ready to install your mA I/O board, please follow the instructions as outlined.

Installation

1. Isolate power and voltages applied to the SF500
2. Open the lid
3. Install the board by mating the connectors and secure the card in place using the three screws provided
4. Close the lid
5. Apply power and voltage to the SF500

Refer to:

- Technical specifications (Page 155)
- mA I/O Board (Page 29)
- mA I/O Parameters (P200 - P220) (Page 127)
- *mA I/O (0/4-20 mA)* in the section mA I/O (0/4 – 20 mA) (Page 73)

4.3.3 LVDT Conditioner Card

SF500 is software/hardware ready to accept the optional LVDT conditioner card.

SF500 may be shipped to you without an LVDT conditioner card, for installation at a later date.

If you are ready to install your card, please follow the instructions as outlined.

Installation

1. Isolate power and voltages applied to the SF500
2. Open the lid
3. Install the three provided standoffs into the motherboard at the locations as shown in the diagram in “Optional Components and their locations (Page 18)”.
4. Connect the wiring between the card and the motherboard according to the instructions in “LVDT (Page 22)”.
5. Affix the card on the standoffs using the three screws provided.
6. Close and secure the lid.
7. Re-apply power and voltages to the SF500.

Refer to:

- Technical specifications (Page 155)
- LVDT (Page 22)

4.4 Optional Components and their locations

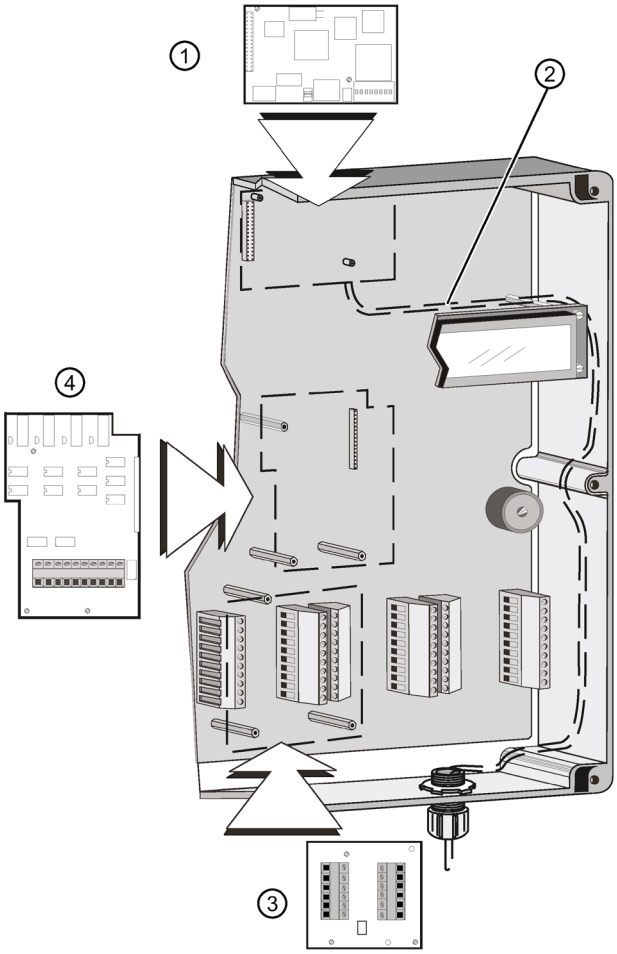

① SmartLinx®
② Route SmartLinx® cable along right hand wall
③ LVDT conditioner card
④ mA I/O board

4.5 Interconnection

Note

- Wiring may be run via common conduit. However, these may not be run in the same conduit as high voltage contact or power wiring.
- Ground shield at one point only.
- Insulate at junctions to prevent inadvertent grounding.

4.5.1 System Diagram

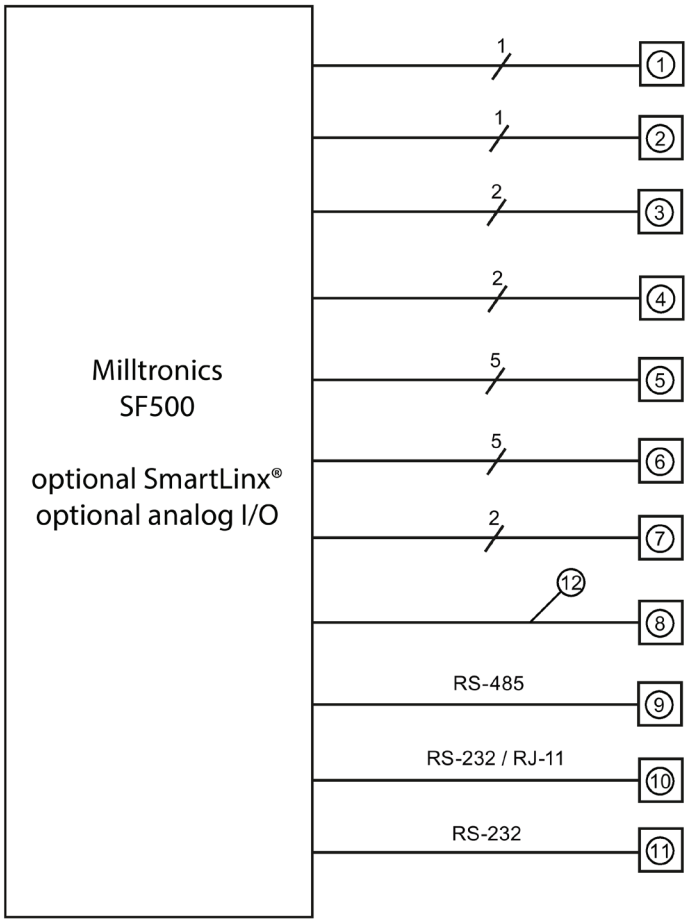

① Solids flowmeter, See Technical specifications (Page 155)
② mA output to customer device
③ mA output to customer device (optional I/O board required)
④ mA input to customer device (optional I/O board required)
⑤ relay output, to customer device
⑥ auxiliary inputs
⑦ customer remote totalizer
⑧ optional fieldbus connection (SmartLinx card required)
⑨ communication ports can be configured for Siemens Dolphin, print data, or Modbus ASCII or RTU protocol
⑩ communication ports can be configured for Siemens Dolphin, print data, or Modbus ASCII or RTU protocol
⑪ communication ports can be configured for Siemens Dolphin, print data, or Modbus ASCII or RTU protocol
⑫ fieldbus communication

Note

Typical system capability. Not all components or their maximum quantity may be required.

4.6 Flowmeter

4.6.1 One Load Cell

Siemens solids flowmeter

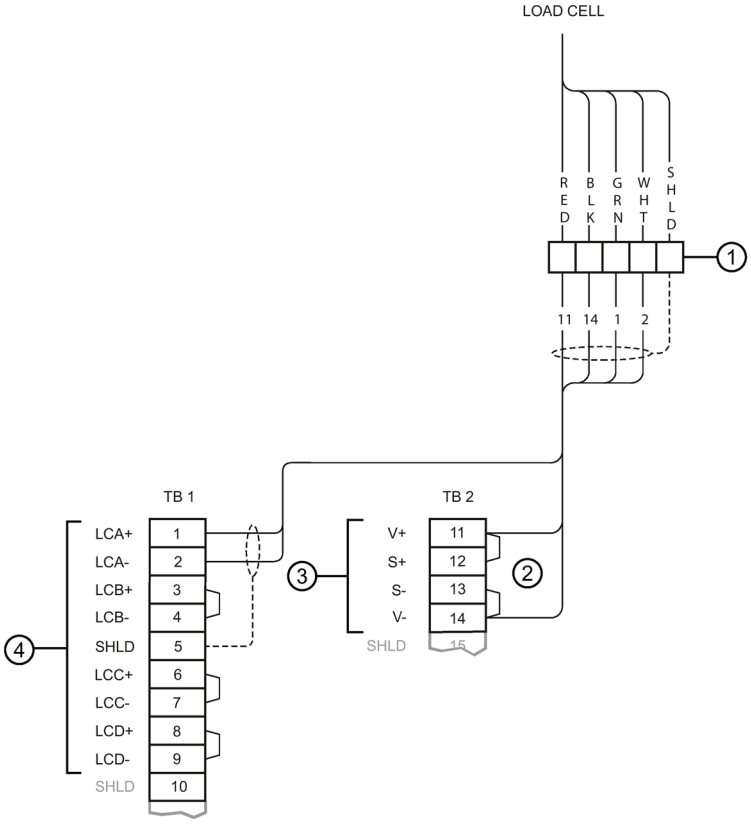

① Customer junction box

② Where separation between the SF500 and flowmeter exceeds 150 m (500 ft.):

1. Remove jumpers from SF500 terminal 11/12 and 13/14.
2. Run additional conductors from:
   - SF500 terminal 12 to scale RED
   - SF500 terminal 13 to scale BLK

If the load cell wiring colours vary from those shown, or if extra wires are provided, consult Siemens.

③ Load cell excitation

④ Load cell inputs

Note

Colour code for load cells used on Siemens flowmeters may be different than shown. Please refer to the flowmeter wiring diagram.

4.6.2 Two Load Cell

Siemens Solids Flowmeter

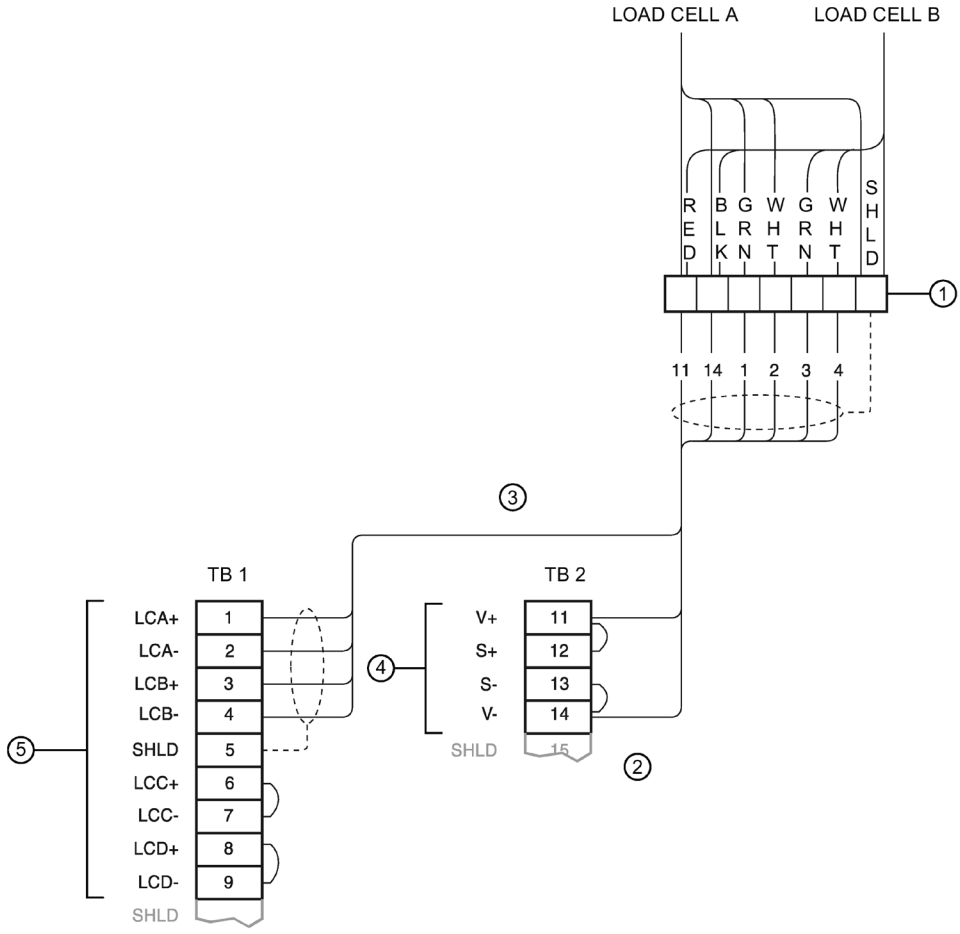

① Customer junction box

② Where separation between the SF500 and flowmeter exceeds 150 m (500 ft.):

1. Remove the jumpers from SF500 terminal 11/12 and 13/14.
2. Run additional conductors from:
   - SF500 terminal 12 to scale RED
   - SF500 terminal 13 to scale BLK

If the load cell wiring colours vary from those shown, or if extra wires are provided, consult Siemens.

③ Integrator

④ Load cell excitation

⑤ Load cell inputs

Note

Colour code for load cells used on Siemens flowmeters may be different than shown. Please refer to the flowmeter wiring diagram.

4.6.3 LVDT

Type	EXC+	EXC–	COM	C.T.	SIG–
Standard	Red	Blue	Yellow	Black	Green
Encapsulated	Red	Orange	White	Black	Yellow

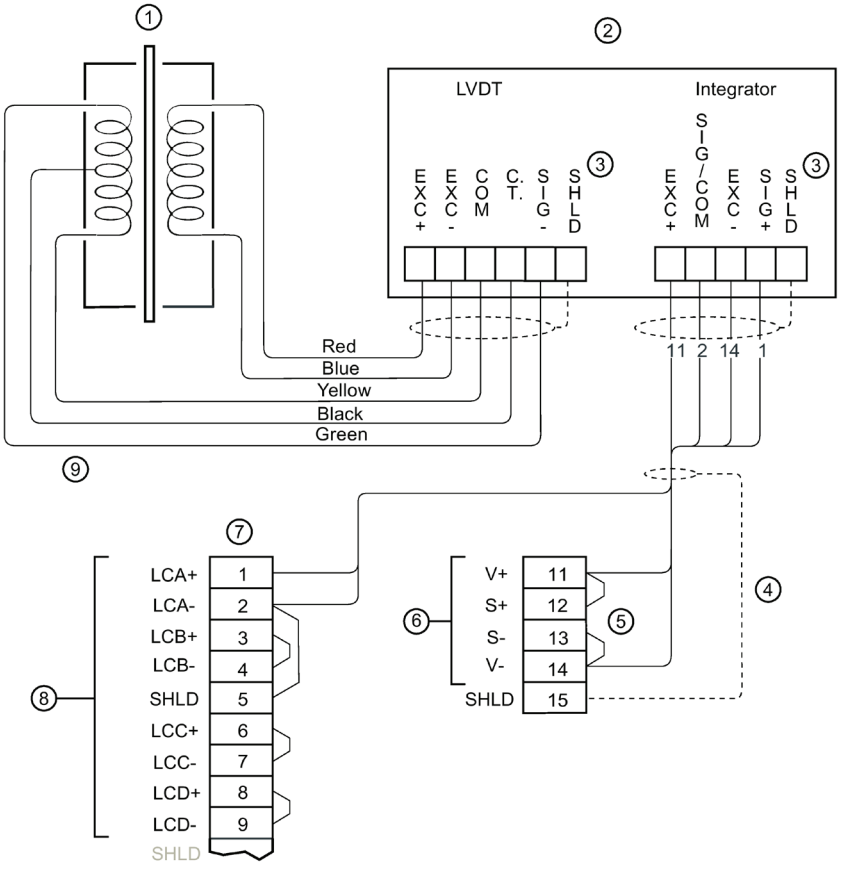

① Flowmeter with LVDT

② Siemens LVDT Conditioner

③ Cable shields must connect to ground only through the SF500 Motherboard (TB15), and should not be grounded to the LVDT Conditioner Card enclosure or any other location.

④ For LVDT Conditioner cards that are mounted on the SF500 Motherboard, use 5 individual wires instead of the 4-conductor shielded cable shown above, to connect the LVDT card to the SF500.

⑤ Where separation between the SF500 and LVDT conditioner exceeds 150 m (500 ft.):

3. Remove the jumpers from SF500 terminal 11/12 and 13/14.
4. Run additional conductors from:
   - SF500 terminal 12 to integrator terminal block **+EXC**
   - SF500 terminal 13 to integrator terminal block **–EXC**

⑥ Load cell excitation

⑦ Siemens SF500

⑧ Load cell inputs

⑨ Maximum cable run LVDT to Conditioner 300 m (1000 ft.)

The LVDT Conditioner Card can be mounted on the SF500 Motherboard, or in a remotely located enclosure. The above wiring diagram is for a remote mounted installation.

For further connection information on specific LVDTs consult Siemens.

Note

- LCA (Terminal 2) is jumpered to SHLD (Terminal 5), which internally connects to the load cell circuit common.
- Do not connect to the Speed Sensor (Terminal 17) common, it is isolated from the load cell circuitry.
- Be sure to connect SF500 terminal 2 to SF500 terminal 5.

4.7 Auxiliary Inputs

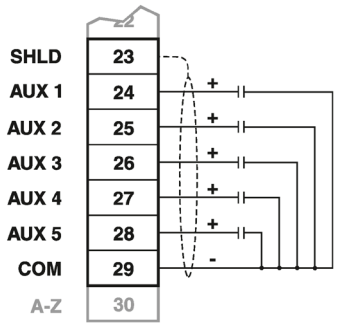

Customer dry contacts, or open collector transistor output supplied as required.

Refer to P270 (Page 127) for programming details.

4.8 Auto Zero

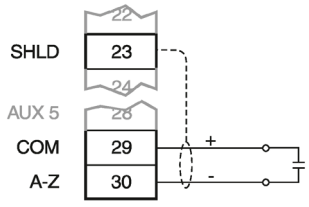

Prefeed activated dry contact.

Refer to Auto Zero (Page 53).

4.9 RS-232 (Port 1)

4.9.1 Printers

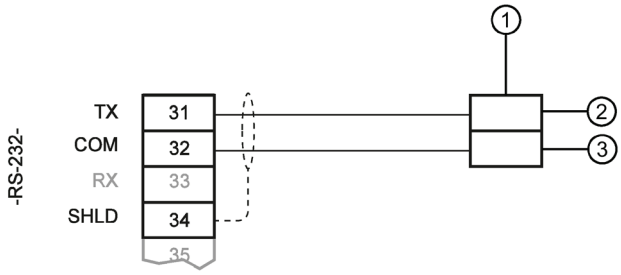

① Printer
② Receive
③ Common

4.9.2 Computers and Modems

Typical configurations for connection to a PC compatible computer or modem, using no flow control:

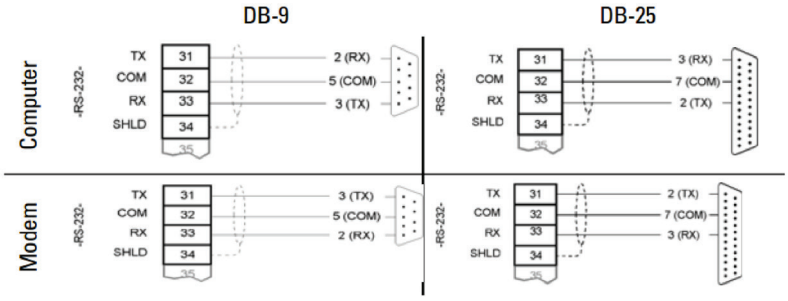

4.10 Remote Totalizer

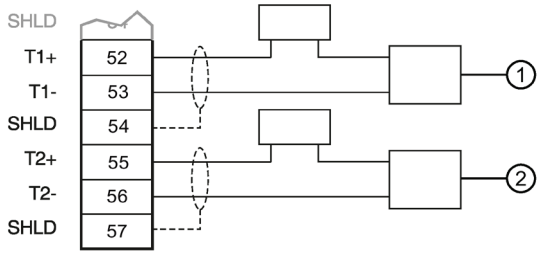

① ~ Supply, 30V max, Remote totalizer 1

② ~ Supply, 240V max, Remote totalizer 2

Note

External power supply not required on all totalizer models.

4.11 mA Output 1

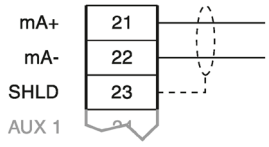

to customer instrumentation, isolated mA output, 750 Ω maximum load

4.12 Relay Output

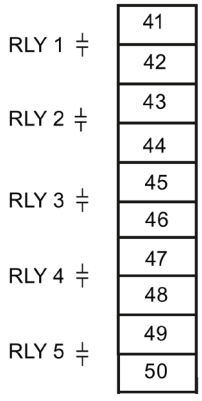

The relays are shown in de-energized state. Contacts are normally open, rated 5 A at 250 V non-inductive.

4.13 RS-485 (Port 2)

4.13.1 Daisy Chain

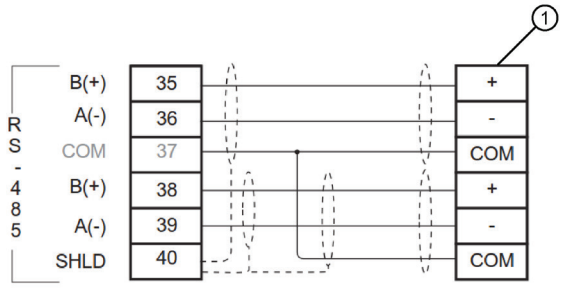

① Customer device

4.13.2 Terminal Device

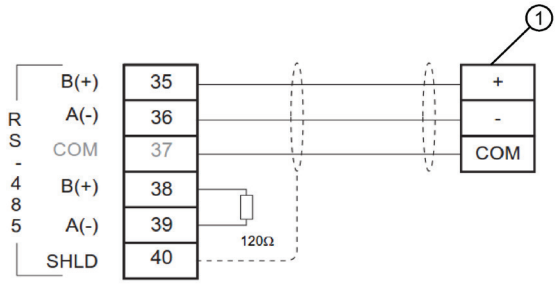

① Customer device

RS-232 (Port 3)

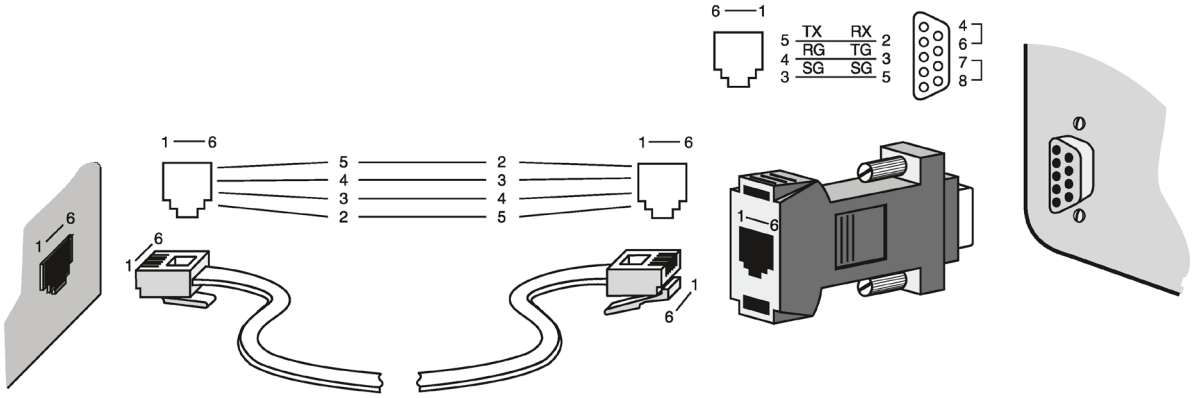

Note

Jumper pins 4-6 and 7-8 on the DB9 connector when using hardware flow control. Otherwise, leave them open.

4.14 Power Connections

The SF500 is available in AC or DC power models.

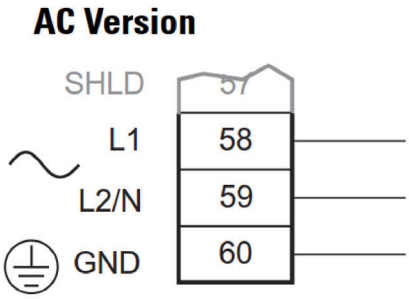

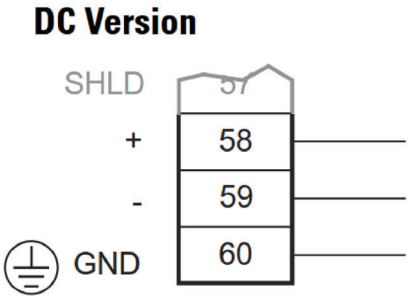

Note

AC power connections:

1. The equipment must be protected by a 15 A fuse or a circuit breaker in the building installation.
2. A circuit breaker or switch in the building installation, marked as the disconnect switch, shall be in close proximity to the equipment and within easy reach of the operator.

4.15 mA I/O Board

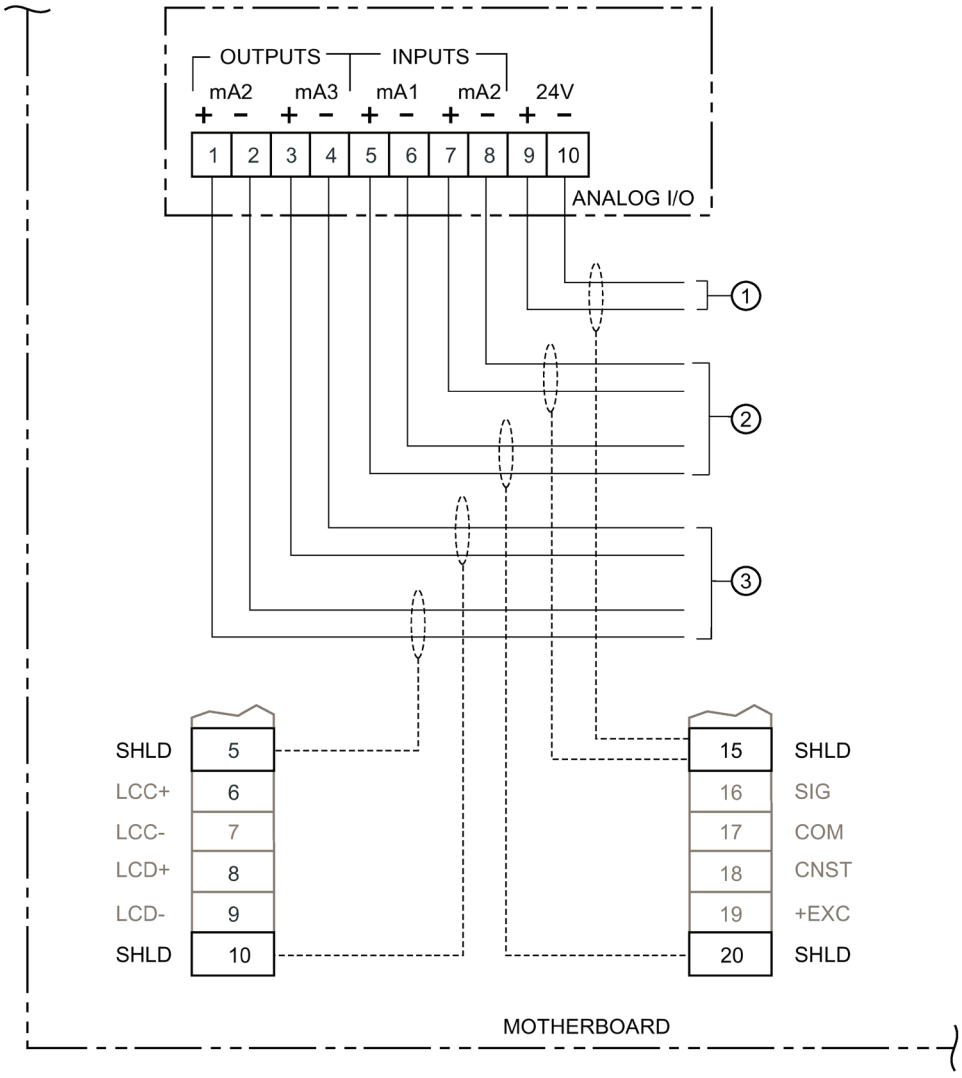

① auxiliary supply output, isolated 24 V dc at 50 mA, short circuit protected
② from customer instrumentation, isolated mA input, 200Ω
③ to customer instrumentation, isolated mA output, 750Ω maximum load

4.16 Installing/Replacing the Memory Backup Battery

The battery (see Technical specifications (Page 155)) should be replaced every 5 years to ensure back up during lengthy power outages. An on board capacitor provides 20 minutes of charge to preserve the memory while the battery is being changed.

Note

The unit is supplied with one battery (battery P/N BR2330 or use equivalent 3V Lithium battery). Insert the battery into the holder as described below before using the SF500.

WARNING

Power

Disconnect power before installing or replacing the battery.

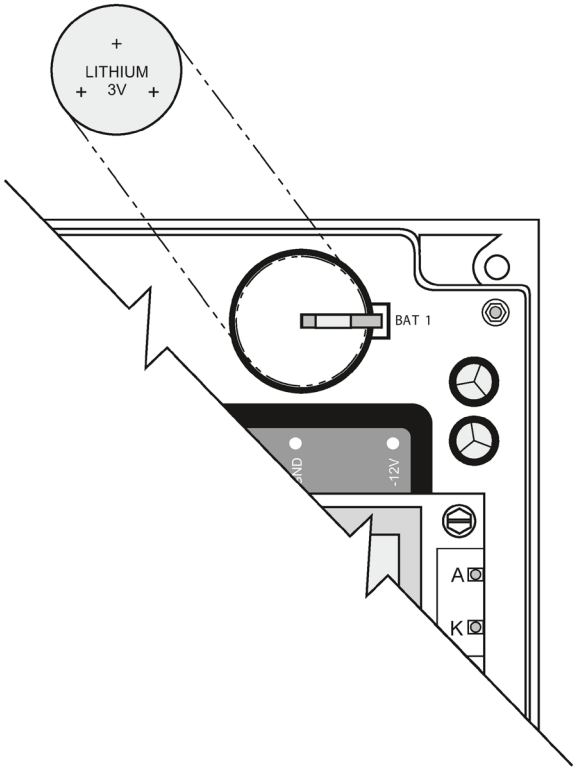

Installation steps:

1. Open the enclosure lid.
2. Slide the battery into the holder. Be sure to align the + and – terminals correctly.
3. Close and secure enclosure lid.

Commissioning

5

Note

- For successful start up, ensure that all related system components such as the flowmeter are properly installed and connected.
- Ensure that the SW1 is in the normal position, to the right. (See Layout (Page 14))

SF500 operates under two modes: **RUN** and **PROGRAM**. On initial power-up, the unit starts in the **PROGRAM** mode.

5.1 Keypad

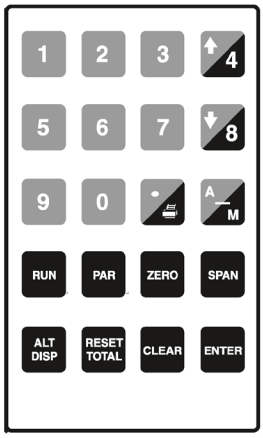

Key	Function	
	PROGRAM mode	**RUN mode**
4 8	In **view** mode: scrolls through parameter list	changes PID local setpoint values
	decimal key	prints
A M	minus key	switches PID between auto and manual mode
RUN	opens **RUN** mode	
PAR	opens parameter direct entry	opens **PROGRAM** mode

Key	Function	
	PROGRAM mode	RUN mode
ZERO SPAN	initiates calibration	initiates calibration
CLEAR	clears entry	
ENTER	toggles between **view** and **edit** modes, confirms parameter values	
ALT DISP	opens **RUN** mode	changes **RUN** mode display
RESET TOTAL		starts totalizer 1 reset sequence

5.2 PROGRAM Mode

The **PROGRAM** parameters define the calibration and operation of the SF500.

In **PROGRAM** mode, the user can view the parameter values or edit them to suit the application.

5.2.1 Program Mode Display

VIEW

```
P001 Language                                    V
1-En 2-Fr 3-De 4-Es 5-It 6-Po 7-Ru               1
```

EDIT

```
P001 Language                                    E
1-En 2-Fr 3-De 4-Es 5-It 6-Po 7-Ru               1
```

5.2.2 To enter PROGRAM mode:

Press the following key to access the parameter:

PAR

```
P001 Language                                    V
1-En 2-Fr 3-De 4-Es 5-It 6-Po 7-Ru               1
```

The default of previous parameter view is displayed. For example, P001 is the default parameter for initial start up

To select a parameter

Press the following key to move up:

```
P002 Test Reference Selection                    V
1-Weight, 2-Ecal                                 1
```

For example, scrolls up from P001 to P002

Press the following key to move down:

```
P001 Language                                    V
1-En 2-Fr 3-De 4-Es 5-It 6-Po 7-Ru               1
```

For example, scrolls down from P002 to P001

To access parameter directly

Press the following key to access the parameter:

```
View/Edit Parameter
Enter Parameter Number
```

Press the following keys in sequence:

```
P011 Design Rate:                                V
Enter Rate                                       100.00 kg/h
```

For example, access P011, design rate

Or press the following for the direct access of parameters:

```
P940-2 Load Cell mV Signal Test                    V
mV reading for B                                   6.78
```

For example, access P940-2, load cell B mV signal

To change a parameter value

```
P011 Design Rate:                                  V
Enter Rate                                         100.00 kg/h
```

From the view mode

Press the following key:

```
P011 Design Rate:                                  E
Enter Rate                                         100.00 kg/h
```

If edit mode is not enabled after pressing ENTER, security is locked. Refer to Security Lock (P000) (Page 122) for instructions on disabling.

Press the following key to enter the new value

```
P014 Design Speed                                  V
Enter Speed                                        0.08 m/s
```

For P001 to P017, ENTER effects the change and scrolls to the next required parameter.

To reset a parameter value

Press the following key:

```
P011 Design Rate:                                  E
Enter Rate                                         100.00 kg/h
```

From the edit mode

Press the following key:

```
P011 Design Rate:                                V
Enter Rate                                       0.00 kg/h
```

Value is reset to factory value. For example, 0.00 kg/h

5.2.3 RUN Mode

To operate SF500 in the **RUN** mode, the unit must undergo an initial programming to set up the base operating parameters.

Attempting to enter the **RUN** mode without satisfying the program requirements forces the program routine to the first missing item.

5.3 Initial Start Up

Initial start up of SF500 consists of several stages, and assumes that the physical and electrical installation of the solids flowmeter is complete:

- power up
- programming
- load cell balancing
- zero and span calibration

5.3.1 Power Up

Upon initial power up, SF500 displays:

```
P001 Language                                    V
1-En 2-Fr 3-De 4-Es 5-It 6-Po 7-RU               1
```

The initial display prompts the user to select the preferred language.

5.3.2 Programming

Press:

SF500 then scrolls sequentially through the start up program as parameters P001 through P017 are addressed.

```
P002 Test Reference Selection                    V
Select 1-Weight, 2-Ecal                          1
```

For example, accept 'weight' (supplied with flowmeter) as the test reference.

Press the following key:

```
P003 Number of Load Cells                          V
Enter Number of Load Cells                         1
```

For example, accept '1' as the number of load cells.

Note

When using LVDT, Coriolis, or Centripetal style flowmeters, enter 1.

Press the following key:

```
P004 Rate Measurement System                       V
Select 1-Imperial, 2-Metric                        2
```

For example, accept '2' for measurements in metric.

Press the following key:

```
P005 Design Rate Units:                            V
Select: 1-t/h, 2-kg/h, 3-kg/min                    1
```

For example, accept '1' for units in t/h

Note

t/h equals metric tonnes per hour.

Press the following key:

```
P008 Date:                                         V
Enter YYYY-MM-DD                                   1999-03-19
```

1999-03-19 is the default date

Press the following key:

```
P008 Date:                                    E
Enter YYYY-MM-DD                              1999-03-19
```

For example, enter current date of March 19, 1999

Press the following keys in a sequence:

```
P009 Time:                                    V
Enter HH-MM-SS                                00-00-00
```

Factory set time 24 hour clock

Press the following key:

```
P009 Time:                                    E
Enter HH-MM-SS                                00-00-00
```

For example, enter current time of 14:41

Press the following keys in a sequence:

```
P011 Design Rate:                             V
Enter Rate                                    0.00 t/h
```

Factory design rate

Press the following key**:**

```
P011 Design Rate:                                    E
Enter Rate                                           0.00 t/h
```

For example, rate of 100 t/h

Press the keys in the following sequence:

```
P017 Test Rate: Weight MS 1                          V
Enter test Rate                                      0.00 t/h
```

Press the following Key:

```
P017 Test Rate: Weight MS 1                          E
Enter test Rate                                      0.00 t/h
```

Press the keys in the following sequence:

Enter the test rate value as calculated from the corresponding solids flowmeter instruction manual. The test rate value should be less than the design rate. If not, contact Siemens.

```
P017 Test Rate: Weight MS 1                          V
Enter Test Rate                                      75 t/h
```

The initial programming requirements are now satisfied. To ensure proper entry of all critical parameter values, return to P002 and review parameters through to P017.

5.4 Load Cell Balancing

Siemens flowmeters are either single load cell or, in the case of two load cell flowmeters, do not offer connection of the calibration weight to each load cell.

If you are operating a two load cell solid flowmeter which has the ability to balance the load cells individually, do so prior to initial programming and calibration, or after both load cells have been reinstalled or replaced.

Access P295

```
P295 Load Cell Balancing:                    E
Select:1-A&B                                 0
```

Press

```
Load Cell Balancing A & B
Place weight at cell B and press ENTER
```

Press

```
Load Cell Balancing A & B
Place weight at cell A and press ENTER
```

Press the following key:

```
Load Cell Balancing A & B
Load cell are now balanced
```

Balancing the load cells requires a subsequent zero and span calibration

5.4.1 Zero Calibration

Note

To obtain an accurate and successful calibration, ensure that no material is flowing through the flowmeter and that the test weights are not applied.

Press the following key:

```
Zero Calibration. Current Zero                    0
Clear flowmeter. Press ENTER to start
```

Displays the current zero count

Press the following key:

```
Initial Zero Calibration. In progress          %
Current Reading:                               ####
```

The zero count being calculated while calibration is in progress

The duration of the Zero calibration is dependent upon a preset time duration and the (P360) calibration duration. If P360=1, the zero duration is approximately 20 seconds.

```
Calibration Complete. Deviation                0.00
Press ENTER to accept value                    551205
```

The deviation from previous zero; for an initial zero there is no previous zero; hence the deviation is 0.
For example, the new zero count, if accepted

Press the following key:

```
Zero Calibration. Current Zero                 551205
Clear flowmeter. Press ENTER to start
```

Accepting the Zero returns to start of Zero. A new Zero can be performed, or continue to Span.

Note

The moisture meter is ignored during calibration.

5.4.2 Span Calibration

When performing a Span Calibration where the test reference is ECal (P002 = 2), do not apply the supplied test weight and run the flowmeter empty.

Note

To obtain an accurate and successful calibration, ensure that there is no material flowing through the flowmeter and that the test weight is applied.

Stop the material flow and apply the test weight to the flowmeter as instructed in the flowmeter manuals.

Press the following key:

```
Span Calibration Current Span                    0
Setup test Press ENTER to Start
```

For example, the current span count

Press the following key:

```
Initial Span Calibration in progress             %
Current Reading                                  ####
```

The span count being calculated while calibration is in progress

The duration of the Span calibration is dependent upon a preset time duration and the (P360) calibration duration. If P360=1, the span duration is approximately 20 seconds.

If

```
Span Count Too Low
Press CLEAR to continue
```

- Signal from load cell or LVDT too low, ensure proper test weight or chain is applied during calibration.
- Check for proper load cell or LVDT wiring and ensure shipping brackets have been removed.

```
Calibration Complete Deviation                   0.00
Press ENTER to Start                             36790
```

- The deviation from the previous span; for an initial span, there is no previous span count; hence the deviation is 0.
- For example, the new span count, if accepted.

Press the following key:

```
Span Calibration. Current Span                   36790
Setup test Press ENTER to Start
```

For example, the current span count

Accepting the Span returns to start of Span. Perform a new Span or enter **RUN** mode. Before returning to **RUN** mode, remove the test weight from the flowmeter and store it in a secure place.

Note

The moisture meter is ignored during calibration.

5.4.3 RUN Mode

Proper programming and successful zero and span calibration allow entry into the **RUN** mode. Otherwise, entry is denied and the first missing item of programming or calibration is displayed.

Press

```
Rate                                        0.00 t/h
Total 1                                     0.00 t
```

For example, if there is no material moving through the flowmeter. The current rate is 0 and no material has been totalized.

Once initial programming is complete and the SF500 can operate in **RUN** mode, you may put the flowmeter into normal service. The SF500 is functioning under its initial program and calibration, reporting rate of material flow and totalizing.

If the initial entry and operation in **RUN** mode is successful, recalibrate the weighing system by performing a series of material tests. Material tests verify that the SF500 is reporting accurately. Where any inaccuracies exist, correct the system with a manual span adjustment (P019).

Perform recalibration of the zero and span routinely to maintain accurate reporting of rate and total.

Refer now to Recalibration (Page 50).

Recalibration 6

6.1 Material Tests

Perform material tests to verify the accuracy of the span calibration and compensate for material flow. If the material tests indicate a repeatable deviation exists, perform a manual span adjust (P019). This procedure automatically alters the span calibration and adjusts the test rate (P017) value, yielding more accurate span recalibrations.

If the span adjust value is within the accuracy requirements of the weighing system, the material test was successful. Resume normal operation.

If the span adjust value is not acceptable, repeat the material test to verify repeatability. If the result of the second material test differs considerably, consult Siemens or contact your local Siemens representative.

If the span adjust values are significant and repeatable, perform a manual span adjust.

Note

Test weights are NOT used during material tests.

There are two methods of executing the manual span adjust: *% Change and Material Test* .

- *% Change*: based on the material test, the difference between the actual weight of material and the weight reported by the SF500 is calculated and entered into P019 as % change.
- *Material Test*: based on material test, the actual weight of material is entered into P019.

The method of execution is a matter of preference or convenience, and either yields the same result.

6.1.1 % Change

To run a %Change material test:

1. Stop material flow.
2. Perform a zero calibration.
3. Put the SF500 into **RUN** mode.
4. Record the SF500 total as the start value _ _ _ _ _ _ _
5. Run material at a minimum of 50% of design rate over the belt scale for a minimum of 5 minutes.
6. Stop the material feed.
7. Record the SF500 total as the stop value _ _ _ _ _ _ _

8. Subtract the start value from the stop value to determine the SF500 total.
9. Weigh the material sample if not already known

- SF500 total = _ _ _ _ _ _ _
- material sample weight = _ _ _ _ _ _ _

Calculate the span adjust value:

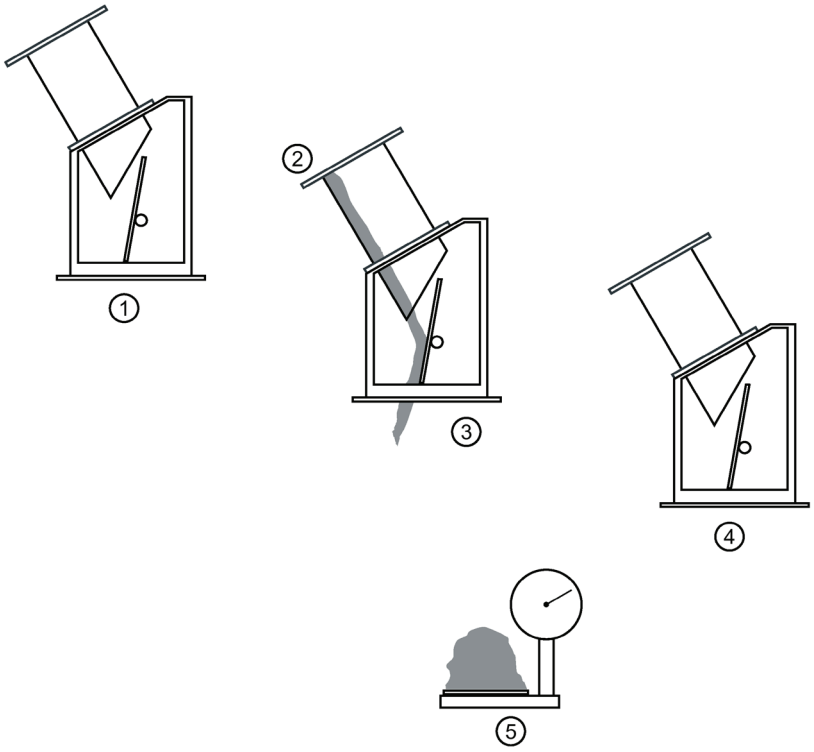

① zero calibration
② start total
③ **RUN** mode
④ stop material feed
⑤ weigh material (kg/lb)

% span adjust = [(SF500 - material sample weight) x 100] / material sample weight

6.1.1.1 Access P019 and enter EDIT mode

```
P019 Manual Span Adjust                          E
Select 1-% Change 2-Material Test                0
```

Press the following keys:

```
P598 Span Adjust Percentage                    V
Enter Calculated +/- error                     0.00
```

Press the following key:

```
P598 Span Adjust Percentage                    E
Enter Calculated +/- error                     0.00
```

Press the following keys:

if % change is negative, remember to enter the minus sign, for example, -1.3.

```
P017 Test Rate Weight:MS1                      V
Enter Test Rate                                56.78
```

For example, the new test load value is displayed

6.1.2 Material Test

The Material Test option allows the SF500 to calculate the size of the material sample as recorded by its totalizers and allows the operator to directly enter the actual weight of the material sample. The % error is calculated and can be accepted or rejected by the operator.

Access P019 and enter EDIT mode

```
P019 Manual Span Adjust                        E
Select 1-% Change 2-Material Test              0
```

Press the following keys:

```
Material Test
Add to Totalizer 0-No, 1-Yes
```

For example, do not add weight of material test to totalizer

If yes, the weight of the material test will be added to the totalizer, if no, material is added to test totalizer (4) only.

Press the following keys:

```
Material Test
Press ENTER to start
```

Press the following key:

```
Material Test                                    tonnes
Press ENTER key to stop                          #.###t
```

The totalizer reading as the material test is run.

Press the following key:

```
Material Test                                    964.032t
Enter actual amount                              tonnes
```

For example, the weight totalized by the solids flow Enter actual amount tonnes meter and SF500.
975.633 kg is the actual weight of the material test

Press the following keys:

```
Material Test Deviation                          -1.19
Accept 0-No, 1-Yes
```

For example, the calculated deviation is displayed as a % of the actual weight

Press the following keys:

```
P017 Test Rate Weight: MS1                          V
Enter Test Rate                                     56.78
```

For example, the new rate value is displayed.

Verify the results of the span adjust by material test or return to normal operation.

6.2 Design Changes

Changes to parameters that impact the calibration do not take effect until a recalibration is completed.

If significant changes have been made, you may need to perform an initial zero (P377) and/or initial span (P388).

6.3 Recalibration

To maintain the accuracy of the weighing system, recalibrate the zero and the span periodically. Recalibration requirements are highly dependent upon the severity of the application. Perform frequent checks initially. As time and experience dictate, you may reduce the frequency of these checks. Record any deviations for future reference.

The displayed deviations are referenced to the previous zero or span calibration. Deviations are continuously tallied for successive zero and span calibrations. When their limit is exceeded, an error message shows that the deviation or calibration is out of range.

6.3.1 Routine Zero

Note

To obtain an accurate and successful calibration, ensure that the required criteria are met. Refer to Calibration Criteria (Page 158).

Press the following key:

```
Zero Calibration. Current Zero.                     551205
Clear belt. Press ENTER to start
```

For example, the current zero count.

Press the following key:

```
Zero Calibration in progress                    %
Current Reading:                                0.01 kg/m
```

For example, the rate reported while calibration is in progress

```
Calibration complete. Deviation                 0.02
Press ENTER to accept value                     551418
```

For example, the calculated deviation in % of full span and the new zero count, if accepted.

A deviation that is high (Siemens recommends 3 or higher) should be investigated further to identify the source).

If

```
Calibration is out of range
Deviation report:                               403.37
```

If unacceptable, press the following key to restart:

This indicates that the mechanical system is errant. P377, initial zero, should be used judiciously and only after a thorough mechanical investigation.

Find and correct the cause of the increased deviation, then re-try a zero recalibration. If this deviation is acceptable, set P377 to 1 to invoke an initial zero calibration. Further deviation limits are now based on this new initial zero.

Press the following key:

```
Zero Calibration. Current Zero                  551418
Clear flowmeter. Press ENTER to start
```

For example, zero calibration is accepted and displayed as the current zero.

Note

This is the end of Zero Calibration. Proceed with Span Recalibration or return to **RUN**.

6.3.2 Initial Zero

Perform an initial zero if necessary when **calibration is out of range** message is shown. During this step the progress of the process will be shown on the display with a progress indicator in %.

Access P377 and enter EDIT mode

```
P377 Initial Zero                                E
Enter 1 to start initial Zero                    0
```

Press the following keys

```
Zero Calibration. Current Zero                   530560
Clear flowmeter. Press ENTER to start
```

For example, the current zero.

Press the following key:

```
Initial Zero Calibration in progress             %
Current Reading:                                 #####
```

For example, the zero count being calculated while calibration is in progress.

```
Calibration complete. Deviation                  0.00
Press ENTER to accept value                      551413
```

For example, the deviation in % from previous zero. The new zero count if accepted. If unacceptable, press the following key to restart:

Press the following key:

```
Zero Calibration. Current Zero                   551413
Clear flowmeter. Press ENTER to start
```

For example, the current zero count.

Note

This is the end of zero calibration. Proceed with span recalibration or return to **RUN**.

6.3.3 Direct Zero

Use direct zero entry (P367) when replacing software or hardware, if it is not convenient to perform an initial zero. A record of the last valid zero count is required.

Access P367 and enter EDIT mode

```
P367 Direct Zero Entry                          E
Enter Zero Count                                0
```

Press the following keys in a sequence:

```
Zero Calibration. Current Zero                  V
Enter Zero Count                                551401
```

For example, the last valid zero count.

6.3.4 Auto Zero

Use Auto Zero to perform a zero calibration automatically when flow stops.

The Auto Zero function provides automatic zero calibration in RUN mode if all of these conditions are met:

- the auto zero input (terminals 29/30) is in a closed state; jumper or remote contact
- the rate of flow is between +2 and –2% of the design rate (P011)
- the terminal and rate status coincide for at least one calibration period (P360)

The rate display is interrupted by the Auto Zero routine.

```
Rate                                  0.00 t/h
Total 1:                              0.00 tonnes AZ
```

(AZ flashes on and off)

Note

t/h equals metric tonnes per hour

```
Calibration Complete. Deviation                    0.0
Auto-Zero value                                    551410
```

For example, typical zero and deviation values.

The duration of the auto zero is one or more calibration periods (P360). If either condition is interrupted during that period, the auto zero is aborted and the **RUN** display resumes. There is no loss of totalization. After one calibration period, another auto zero is attempted if the input and rate conditions are met.

If the resulting zero deviation is less than an accumulated 2% from the last operator initiated zero, the auto zero is accepted.

If the deviation is greater than an accumulated 2%, an error message is displayed. The error message is cleared after five seconds, however if a relay is programmed for diagnostics, it remains in alarm so long as the Auto Zero conditions are being met.

If material feed resumes during an auto zero function, the zero is aborted and the totalizing function restarts where it left off.

6.3.5 Routine Span

Note

To obtain an accurate and successful calibration, ensure that the required criteria are met. Refer to Calibration Criteria (Page 158).

Press the following key:

```
Span Calibration. Current Span                     41285
Setup test. Press ENTER to start
```

For example, the current span count

If

```
Zero should be done prior to Span
Setup test. Press Enter to start.
```

Perform a zero calibration or:

Press the following key:

```
Span Calibration in progress                    %
Current Reading:                                55.56 t/h
```

The rate reported while calibration is in progress.

```
Calibration complete. Deviation                 0.03
Press ENTER to accept value                     41440
```

For example, the deviation in % from previous span, if the new span count is accepted. If unacceptable, press the following key to restart:

A deviation that is high (Siemens recommends three or higher) should be investigated further to identify the source).

Note

During this step the progress of the process will be shown on the display with a progress indicator in %.

If

```
Span Count too Low.
Press CLEAR to continue.
```

If the signal from load cell or LVDT is too low, ensure proper test weight is applied during span.

```
Calibration is out of range
Deviation Error:
```

Check for proper load cell or LVDT wiring.

This indicates that the mechanical system is errant. Use P388, initial span, judiciously and only after a thorough mechanical investigation.

Find and rectify the cause of the increased or decreased deviation. Then re-try a span recalibration.

If this deviation is still unacceptable, set P388 to 1 to invoke an initial span calibration. Further deviation limits are now based on this new initial span.

Press the following key:

```
Span Calibration. Current Span                    41440
Setup test. Press ENTER to start
```

For example, span calibration is accepted and displayed as the current value.

This is the end of span calibration. Remove the test weight and return to **RUN**.

6.3.6 Initial Span

Note

Perform an initial span when a **calibration out of range** message is shown. During this step, the progress of the process will be shown on the display with a progress indicator in %.

Perform a zero calibration prior to performing a span calibration.

Access P388 and enter EDIT mode

```
P388-01 Initial Span                              E
Enter 1 to start Initial Span                     0
```

Press the following keys:

```
Span Calibration. Current Span                    41440
Setup test. Press ENTER to start
```

For example, the current span count.

If

```
Zero should be done prior to Span
Setup test. Press ENTER to start
```

Perform a zero calibration or clear.

Press the following key:

```
Initial Span Calibration in progress
Current Reading:                                    #####
```

The span count being calculated while calibration is in progress.

```
Calibration complete. Deviation                     0.00
Press ENTER to accept value                         41900
```

The deviation is reset. For example, the new span value if accepted. If unacceptable, press the following key to restart:

Press the following key:

```
Span Calibration. Current Span                      41900
Setup test. Press ENTER to start
```

For example, the current span count.

Note

End of span calibration. Remove the test weight and return to **RUN**.

6.3.7 Direct Span

Direct span entry (P368) is intended for use when replacing software or hardware, and when it is not convenient to perform an initial span. A record of the last valid span count is required.

Access P368 and enter EDIT mode

```
P368 Direct Span Entry                              E
Enter Span Count                                    0
```

Press the following keys in a given sequence:

```
P368 Direct Span Entry                          V
Enter Span Count                                41900
```

For example, the last valid span count.

6.3.8 Multispan

The SF500 offers a multispan function, which allows the SF500 to be calibrated for up to eight different products or feed conditions that produce varying flowrate characteristics. Different feed conditions are typically related to running different materials or multiple feed locations. To accommodate such applications, make a span correction by selecting and applying the appropriate span.

Since every material has its own unique physical properties, and may have a different impact, a span calibration may be required for each material to realize maximum accuracy.

With different feeder locations, a span calibration may be required to match each feedpoint or combination of feedpoints.

Each time one of the eight conditions is in effect, select the corresponding multispan prior to putting the SF500 in **RUN** mode. Either change the multispan operation number (P365), or program the external contacts connected to the auxiliary input, P270.

To enable multispan operation, the following must be addressed.

- connections
- programming
- calibration
- operation

Connections

If the span selection is to be done by remote contact, the following connections would apply. Otherwise, no additional connections to the SF500 are required.

Multispan Selection of Spans 1 and 2

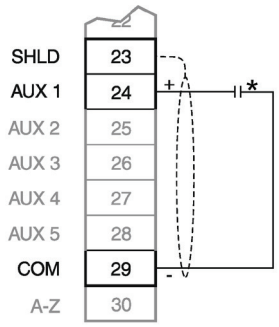

Multispan Selection of Spans 1 to 8

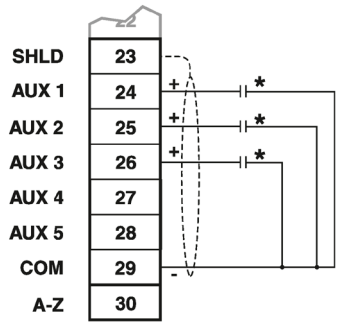

* Remote contact can be from relay or open collector switch.

6.3.8.1 Programming

Access P365 and enter EDIT mode

```
P365 Multispan                                  E
Select [1-8]                                    0
```

Span 1 will have already been set as part of the Start Up and initial calibration. Therefore, select **2**.

Access P017 and enter EDIT mode

```
P017 Test Rate: Weight MS2                      E
Enter Test Rate                                 0
```

Enter the test rate value, and press the following key to perform a span calibration:

To perform a span calibration for another condition, (i.e. span 3 or 4 etc.), access P365 and repeat these steps for each condition. As with any initial span, follow the span calibration for each multispan with a material test and factoring.

To use remote span selection, auxiliary inputs, 1 and/or 2 or 3, are programmed to read the contact state as the span selection. Remote selection overrides the keypad (or Dolphin Plus) selection. The auxiliary inputs override the keypad selection.

Access P270 and enter EDIT mode

```
P270-01 Auxiliary Input Function                E
Select Function [0-13]                          0
```

Enter the following key:

This program Auxiliary Input 1 (terminal 24) to read the contact state for span selections: 1 or 2.

If spans 3 and/or 4 are to be used:

Access P270 and enter EDIT mode (when using spans 3 and/or 4)

```
P270-02 Auxiliary Input Function                E
Select Function [0-13]                          0
```

Enter the following key:

This programs Auxiliary Input 2 (terminal 25), in conjunction with Auxiliary input 1 reads the contact state for the span selections 3 and 4.

If spans 5, 6, 7, and/or 8 are to be used:

Access P270 and enter EDIT mode (when using spans 5 to 8)

```
P270-03 Auxiliary Input Function                    E
Select Function [0-13]                              0
```

Enter the following key:

6

This programs Auxiliary Input 3 (terminal 26), in conjunction with Auxiliary input 1 and Auxiliary input 2 to read the contact state for span selections 5, 6, 7, and 8. Remote selection of a span is not enabled until a span calibration has been completed. Initial span selection must be done via the Multispan parameter, P365.

Operation

When span calibration is done, press the following key to revert to the **RUN** mode.

RUN

```
Rate kg/h                0.00 kg/h Multispan 2
Total 1:                 0.00 kg
```

For example, if there is no material flowing, the current rate is 0 and no material has been totalized.

When the material to be run changes, the multispan is changed to the corresponding span. This is completed either by changing the span value entered in P365, or by closing the appropriate contacts connected to the programmed auxiliary inputs.

Span	Auxiliary Input Aux 1	Multispan Selection Aux 2	Multispan Selection Aux 3
1	⊣⊢	⊣⊢	⊣⊢
2	⊣/⊢	⊣⊢	⊣⊢
3	⊣⊢	⊣/⊢	⊣⊢
4	⊣/⊢	⊣/⊢	⊣⊢
5	⊣⊢	⊣⊢	⊣/⊢
6	⊣/⊢	⊣⊢	⊣/⊢

Span	Auxiliary Input Aux 1	Multispan Selection Aux 2	Multispan Selection Aux 3
7	⊣⊢	⊣⊢	⊣⊢
8	⊣⊢	⊣⊢	⊣⊢

It may be required to reset or note the totalizer value, as the process materials being conveyed may change. Refer to Totalization (P619-P648) (Page 142). Linearization applies concurrently to spans.

6.4 Online Calibration

The Online Calibration feature may be used to routinely check, and if necessary adjust, the Span calibration in **RUN** mode, without interrupting the material flow or process.

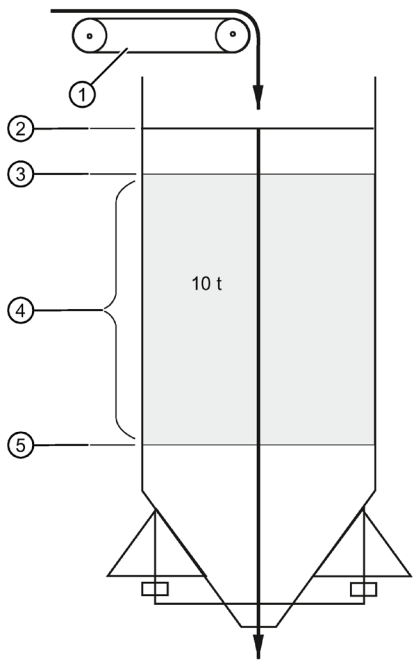

Install a weigh bin, (bin or silo equipped to provide a 4 to 20 mA output proportional to weight), preceding the material infeed.

Connect the weigh bin to one of the mA inputs on the optional mA I/O board of the Milltronics SF500: either mA input 1, terminals 5 and 6; or mA input 2, terminals 7 and 8.

Install a material feed control device, preceding the weigh bin.

① Feeder
② Max. (e.g. 90%)
③ High (e.g. 70%)
④ Reference weight: (the amount of material held between High and Low levels)
⑤ Low (e.g. 30%)

Note

- Press the "PAR" key twice, to enter a parameter number directly.
- Whenever you wish to change a value, press "ENTER" to enable the EDIT mode.

Press the following key:

```
P355 Online Calibration Feature                    E
Select: 0-Off, 1-On                                0
```

EDIT mode: value can be changed.

Select the Online Calibration feature:

Press the following keys:

6.4.1 Online Calibration feature

Access

```
P355 Online Calibration Features                   V
Select: 0-Off, 1-On                                1
```

Value is accepted.

Enter the weigh bin reference weight, (the amount of material the bin holds between the high and low levels), in units selected in P005.

Press the following keys in a sequence:

Access

```
P356 Online Calibration Features                   V
Enter Reference Weight                             10.000
```

For example, reference bin weight.

Enter the max., high, and low limit setpoints as a percentage in P357.

Press the following keys:

Access

```
P357-01 Online Calibration Limits                    V
MAX Limit:                                           90.0
```

Limit as a percentage

Press the following keys:

Access

```
P357-02 Online Calibration Limits                    V
HIGH Limit:                                          70.0
```

Press the following keys:

Access

```
P357-03 Online Calibration Limits                    V
LOW Limit:                                           30.0
```

Calibrate the mA inputs on the SF500 to the 4 and 20 mA levels of the weigh bin. 4 mA is calibrated with the weigh bin empty, using P261–01 or P261–02. 20 mA is calibrated with the weigh bin full, using P262–01 and P262–02.

Assign one of the mA inputs for the Online Calibration function.

Press the following keys:

Access

```
P255-01 mA Input Function                            V
Select 0, 1-PID SP, 2-PID FV, 3-OCAL                 3
```

For example, mA input 1 set to 3.

Assign one of the 5 relays, P100-01 to P100-05, to the Online Calibration function.

Press the following keys:

Access

```
P100-01 Relay Function                          V
Select Function [0-9] (see manual)              9
```

For example, relay 1 set to 9.

Program the assigned relay using P118, relay logic, so that when you connect the assigned relay to the weigh bin material feed control device, the weigh bin material feed stops when the Online relay is energized.

Activate Online Calibration

Press the following keys:

Access

```
P358 Online Calibration Features                V
0-OFF, 1-ACTIVE
```

Note

For remote access, Online Calibration can also be activated using one of the Auxiliary inputs (refer to P270 (Page 130))

When the Online Calibration is activated, normal operation continues until the weigh bin fills to the maximum level, (90% in the example shown). During the filling stage, the current level is displayed as a percentage.

```
Online Calibration -                            LOW > 19%
Wait for LEVEL > MAX                            RLY
```

Current level displayed as percentage.

When the maximum limit is reached, the relay assigned to the Online Calibration function energizes to stop the weigh bin material feed.

```
Online Calibration -                            94% > MAX
Wait for LEVEL < HIGH                           RLY1
```

Material continues to be discharged from the weigh bin, and when the level drops to the High limit (70% in the example) the Online totalizer is automatically activated.

```
Online Calibration -                                TOTAL 3.71 tonnes
Calibration in progress                             RLY1
```

Running total

When the Low limit (30%) is reached, the totalizer is deactivated and the assigned relay is de-energized, which reopens the material feed to the weigh bin.

The SF500 Online material total, the amount of material totalized between the High and Low limits, is compared to the value entered in P356. The deviation percentage between these values and the new Span count value is displayed.

```
Online Calibration -                                Deviation 2.51%
Press ENTER to accept                               New span 22280
```

Deviation percent and new Span count value

Press the following key to accept the results.

```
Online Calibration Complete
Press ENTER to accept                               New span 22280
```

Note

- Deviation must be no greater than ±12% of the initial span or it will not be accepted.
- For remote access, Online Calibration can be accepted using one of the Auxiliary inputs: (refer to P270 (Page 130))

If you want to reject the results and return to **RUN** mode, press the following key:

```
Rate                                                0.00 t/h
Total 1:                                            10.15 t
```

Note

t/h equals metric tonnes per hour

For remote access, to return to **RUN** mode, program one of the Auxiliary inputs: (refer to P270 (Page 130))

If you want to reject the results and perform another online calibration, press the following key to return to P358.

Access

```
P358 Online Calibration Features                    V
0-OFF, 1-ACTIVE                                     1
```

Press the following keys:

If the deviation is greater than ±12%:

```
Calibration is out of range
Deviation Error:
```

1. Rerun online calibration to verify the deviation: press the following key to return to P358.

2. Verify the mechanics of the flowmeter: carry out material tests to ensure the readings are correct. See Material Test (Page 47) for more information.
3. If the mechanics are functioning correctly, perform an initial span using P388.See Initial Span (Page 56) for more information.

6.5 Factoring

Note

For optimum accuracy in the factoring results, a routine zero calibration is recommended prior to performing the factoring routine.

To calculate the value of a new or unknown test weight to the current span, use the factoring procedure.

With the material flow turned off:

```
P359 Factoring                                      V
Enter 1 to start factoring
```

Press the following keys:

```
Factoring Weight
Place weight and press ENTER.
```

For example, factor the test weight.

Press the following key:

```
Factoring Weight
Factoring in progress                                ##.##
```

The rate reported while factoring is in progress.

```
Factoring Weight
Press ENTER to accept value                          45.25
```

For example, the new factor, if accepted.

Press the following key:

```
P017 Test Rate Weight:                               V
Enter Test Rate                                      45.25
```

For example, the current test rate value.

Factoring is complete. Remove test weight and return to **RUN** mode if desired.

Note

If multispan function is used, the test rate value is stored for the current multispan only.

6.6 Linearization

In applications where the ideal flowmeter location has been compromised, or where there is a high degree of variation in flow rates, the flowmeter may report rate nonlinearly. The SF500 provides a linearizing function (P390 – P392) to correct for this deficiency in the weighing system and to provide an accurate report of the actual process.

To verify that the cause of the non-linearity is not mechanical:

- Stop the feeding system.
- Remove the flowmeter cover and suspend increasingly heavier test weights to the sensory mechanism to verify mechanical linearity. For each test weight, note the flow value. If the rate reported by the SF500 is non-linear, a mechanical problem is indicated. Refer to the flowmeter manual to resolve the non-linearity.

If it is determined that the non-linearity is due to the weighing application, and not the actual flowmeter, apply linearization by performing the following:

- zero calibration
- span calibration at 90 to 100% of design rate
- material tests at 90 to 100% of design rate
- manual span adjust if required
- repeat material tests at 1 to 5 intermediary flow rates where compensation is required.

Note

- All initial linearization points must be calculated with linearization turned off (P390 = 0).
- Compensation points must be at least 10% of the design load apart.

- calculate the percentage compensation for each flow rate tested.
  %compensation = (actual weight - totalized weight * 100)/totalized weight
  where:
  actual weight = material test
  totalized weight = SF500 total

Note

- After the programming the compensation into the SF500, run a material test to verify the effect of linearization.
- If additional compensation is required, it must be based on new material tests performed with the linearization turned off (P390 = 0).

Example:

A non-linearity in the ideal response exists in a solids flowmeter application with a design rate of 200 t/h. Material tests are performed at 15, 30, 45, 60, and 75% of the design rate. Zero and Span calibrations are performed at 100% of the design rate, followed by material tests

and a manual span adjust. The five material tests are performed at 30, 60, 90, 120, and 150 t/h, as indicated by the SF500. The following data is tabulated. (This example is exaggerated for emphasis.)

SF500 load	material test	SF500 total	compensation[a)]
t/h	tonnes	tonnes	%
30	2.5	2.8	-10.7
60	5.0	4.5	11.1
90	7.5	7.9	-5.1
120	10.0	9.2	8.7
150	12.5	13.3	-6.0

a) calculation example: % compensation = [(2.5 – 2.8) x 100]/2.8
= -10.7

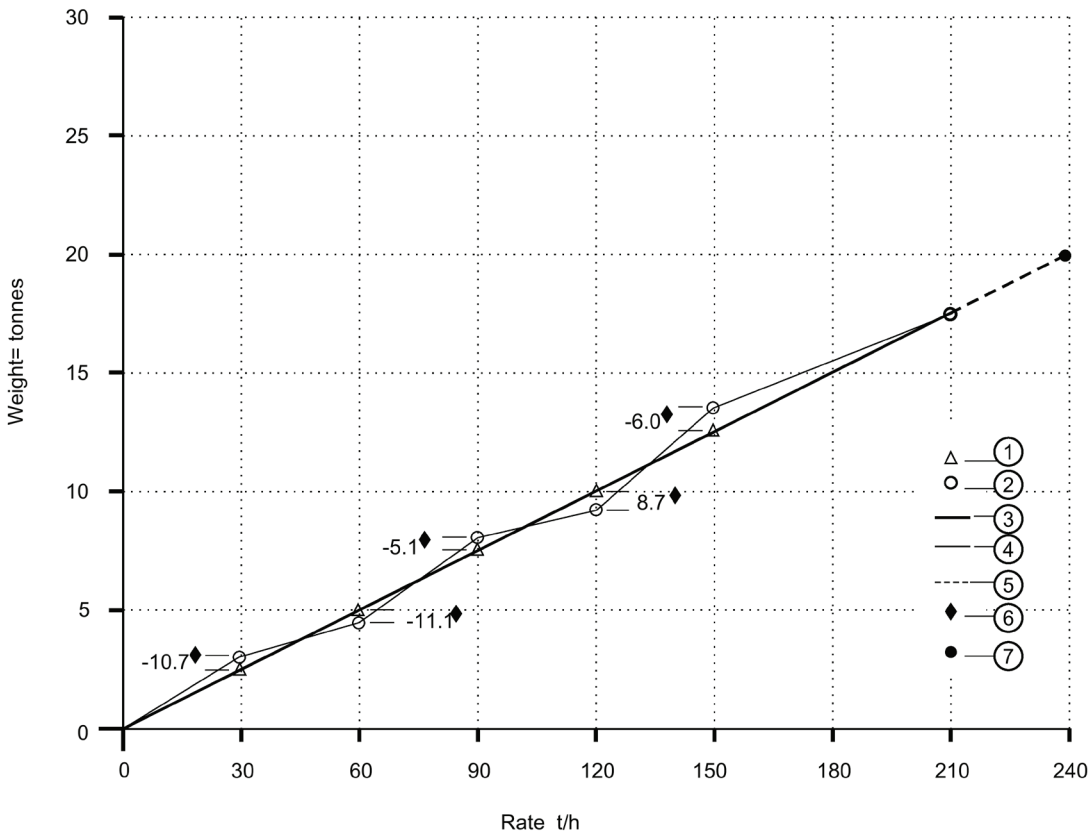

① Actual weight per material list
② Totalized weight by SF-500
③ Flowmeter response
④ Linearized SF500 response
⑤ Internal response 100% - 150% of Span
⑥ % compensation
⑦ span (100%)

Program the SF500 as follows:

Parameter	Function
P390 = 1	linearization – on
P391-01 = 30	point 1, rate
P391-02 = 60	point 2, rate
P391-03 = 90	point 3, rate
P391-04 = 120	point 4, rate
P391-05 = 150	point 5, rate
P392-01 = - 10.7	point 1, compensation
P392-02 = 11.1	point 2, compensation
P392-03 = - 5.1	point 3, compensation
P392-04 = 8.7	point 4, compensation
P392-05 = -6.0	point 5, compensation
Note: Often only one point of compensation is required, usually at a low rate value. In the prior example, if compensation was only required at 30 t/h, program the following parameters. Optimize compensation by establishing the next rate value that agrees with the material test, the compensation is zero and is entered as the next compensation point.	
P390 = 1	linearization on
P391-01 = 30	point 1, rate
P391-02 = 90	point 2, rate
P392-01 = -10.7	point 1, compensation
P392-02 = 0	point 2, compensation

Operating 7

7.1 Rate Sensing

For the SF500 to calculate rate and totalize material flow through the flowmeter, a rate signal representative of material flow is required. The rate signal is provided by the flowmeter. The SF500 is compatible with flowmeters fitted with one or two strain gauge type load cells. To function with LVDT type sensors, an optional LVDT conditioning card is required.

Refer to Technical specifications (Page 155) for flowmeter requirements, and Interconnection (Page 18) for the proper connection.

7.2 Moisture Compensation

Moisture Compensation is used to compensate for the moisture component of the material being weighed. It factors out the moisture component of rate and total for all multispans selected. The factored value is meant to report the dry mean values of the material being conveyed.

The SF500 receives the static load cell signal, and adjusts the value of the rate being displayed and integrated by the moisture percentage. The mA I/O card is required to accept the mA signal from the Moisture Meter. This mA signal can represent 0 to 100% moisture. The moisture percentage is displayed in P398–01. Using P398–02, the moisture percentage can be represented as a percentage of mass to be deducted from the total mass.

Example:

Setting P398–02 = 30% will allow the 4 – 20 mA input to correspond to 0 – 30% moisture. The Zero and Span calibration is not affected by the presence of a moisture meter. It is understood that the calibrations are performed using dry static weights.

The Moisture Meter must be connected to the appropriate mA input and programmed as described in the following steps:

1. Enable mA input function for moisture compensation P255–01 or 02 = 4 (moisture compensation).
2. Set appropriate mA input range P250–01 or 02 = 2 (default is 4 – 20 mA).
3. Set mA input moisture ratio P398–02 = 100% (default).
4. Observe moisture percentage using P398–01.

7.3 Damping

Damping (P080) provides control over the speed at which the displayed rate reading and output functions respond to changes in the internal rate signals. The damping controls changes in the displayed rate of material flow. Relay alarm functions based on input functions of rate respond to the damped value.

Damping consists of a first order filter applied to the signal (reading or output value).

If mA damping (P220) is enabled (value other than 0), then the damping (P080), as it pertains to the mA function, is overridden, and responds independently at the specified mA output damping rate (P220).

Note

Damping (P080–01 or P220) is not applicable to the mA output when programmed for PID function (P201 = 2).

7.4 mA I/O (0/4 – 20 mA)

Output

The standard SF500 provides one isolated mA output (P201). The output range can be set to 0 – 20 mA or 4 – 20 mA (P200). The 0 or 4 mA value corresponds to no flow or zero condition, whereas the 20 mA value corresponds to the associated design rate (P011). The mA output can be limited for over range levels of 0 mA minimum and 22 mA maximum (P212 and P213 respectively). The output 4 and 20 mA levels can also be trimmed (P214 and P215 respectively) to agree with a milliammeter or other external mA device.

The mA output value can be tested to output a prescribed value using parameter P911. Refer to P911 mA Output Test (Page 149).

The optional mA I/O board provides two additional mA outputs, programmable as outputs 2 and 3, using the same parameters as the standard output (1). If programmed for PID control, output 2 is assigned to PID control loop 1 and output 3 is assigned to PID control loop 2.

Input

The optional mA I/O board provides two mA inputs, programmable as inputs 1 and 2. If programmed for PID control, assign input 1 to PID control loop 1 and input 2 to PID control loop 2.

The input range can be set to 0–20 mA or 4–20 mA (P250), and assigned a function (P255), e.g. PID setpoint. The 4 and 20 mA levels can be trimmed (P261 and P262) to agree with an external device, for example, a moisture sensor.

7.5 Relay Output

The SF500 offers five single pole single throw (SPST) relays that can be assigned (P100) to one of the following alarm functions:

- rate: relay alarms on high and/or low material flow rate.
- diagnostic[1)] : relay alarms on error condition as it is reported. Refer to Troubleshooting (Page 152).
- PID[1)]: PID control setpoint deviation
- batch pre-warn
- batch setpoint

For the rate alarm function, the high and low alarm setpoints (P101 and P102 respectively) are required and must be entered in the appropriate units. The high alarm setpoint acts as the setpoint deviation alarm for relays programmed for PID setpoint deviation.

The on/off actuation at both high and low setpoints is buffered by the damping (P080) and the programmable dead band (P117), to prevent relay chatter due to fluctuations. The relay is normally energized; holding the normally open (n.o.) contact closed (can be programmed for reverse operation, P118). Upon an alarm condition, the relay is deenergized and the relay contact is opened. Once in alarm, the relay remains in alarm state until the alarm condition is removed.

[1)] Offered only if the PID system (P400) is enabled.

Example:

P011 = 360 t/h

P100 = 1, rate

P101 = 100% (360 t/h)

P102 = 20% (72 t/h)

P117 = 2% (7.2 t/h)

Alarm is ON with relay de-energized.

7.6 Totalization

The totalization function is based on the internal rate (mass per unit time) signal proportional to flow rate of the associated flowmeter. It is not affected by the damping function (P080). The rate signal is sampled several times a second to accurately count the mass of material conveyed. The count is held in the master totalizer used to increment the internal totalizers and to produce a pulse signal for the remote totalizers.

The SF500 provides several separate totalizer functions:

7.6.1 Internal totalizers

- local display (totalizers 1 and 2)
- verification totalizer (totalizer 3)
- material test totalizer (totalizer 4)
- batch total (totalizer 5)

7.6.2 External totalizers

- totalizer outputs (remote totalizers 1 and 2)

To avoid totalizing material at flow rates below the low flow rate limit, the totalizer drop out limit (P619) is set to a percentage of the design rate. Below this limit, totalization stops. When material flow returns to a rate above the drop out limit, totalization resumes.

Totalizer resolution or count value is set by the respective internal (P631) and external (P638) totalizer[1)] resolution parameters.

[1)] If the resolution selected causes the totalizer to lag behind the count rate, the next possible resolution is automatically entered.

Example:

- **Internal totalizer 1**
  Given: P005 = 1 (t/h), P631 = 4
  Then: totalizer count increments by 10 for each 10 metric tonnes registered
- **External totalizer 1**
  Given: P005 = 1 (t/h), P638 = 5
  Then: contact closure occurs once for every 10 metric tonnes registered

For remote totalization, the contact closure duration (P643) is automatically calculated upon entry of the design rate (P011) and remote totalizer (P638) parameters, so that the duration of contact closure allows the relay response to track the total up to 150% of the design rate. The value can be changed to suit specific contact closure requirements, such as in the case of programmable logic controllers. If the duration selected is inappropriate, the next possible duration is automatically entered.

External Totalizer Calculation Example:

Design Rate = 50 t/h (P011)

External Totalizer Resolution Selected = 0.001 (P638 = 1)

External Totalizer Contact Closure Time selected = 30 msec (P643 = 30)

External Totalizer Cycle Time = 60 msec (External Totalizer Contact Closure Time X 2)

1. Calculate the maximum number of pulses per second for the Contact Closure Time selected (P643).
   Maximum Number of pulses per second
   = 1 / External Totalizer Cycle Time
   = 1 / 0.060
   = 16.6 (which is rounded to a whole number of 16 in the SF500)
2. Calculate the pulses per second required for the External Totalizer Resolution selected (P638).
   Pulses per second = ((Design Rate) * 150%) / (External Totalizer Resolution X 3600)
   = (50 t/h X 150%) / (0.001 X 3600)
   = 20.83

Because the required 20.83 pulses per second is greater than the maximum 16 pulses per second, the External Totalizer Resolution of 0.001 will not allow the External Totalizer to track up to 150% of the design rate. The External Totalizer Resolution will have to be increased to 0.01 or the External Totalizer Contact Closure Time will have to be decreased.

The totalizers are reset through the master reset (P999), the totalizer reset (P648) or through the keypad.

- master reset: the reset of all totalizer functions is included in the master reset.
- totalizer reset: totalizer reset can be used to reset internal totalizers 1 and 2, or totalizer 2 independently. Resetting the internal totalizers 1 and 2 resets the internal registers for external totalizers 1 and 2.
- Keypad: pressing the following keys while in the **RUN** mode resets internal totalizer 1:

Use the totalizer display parameter (P647) to display the internal totalizers while in **RUN** mode. P647 can display either one or both totalizers.

PID Control

8

The PID control algorithm in the SF500 works for feed rate control applications. It is based on motor control type algorithms and includes several anti-windup provisions.

To operate the SF500 as a controller, address the following:

- hardware
- connections
- setup and tuning
- programming

8.1 Hardware

For the SF500 to operate as a controller, install the optional mA I/O board. Refer to Installation (Page 12).

8.2 Connections

In addition to the standard operating connections, make connections to the process instruments.

Refer to:

- Installation (Page 12), specifically:
- Relay Output (Page 25), for relay connections
- mA I/O board (Page 29), for mA input and output connections
- Auxiliary Inputs (Page 23), for optional remote control

Connect the SF500 as either a:

1. setpoint controller – rate control
2. setpoint controller – external process variable with or without rate control

PID loop	mA output	terminals (mA I/O)	mA input	terminal (mA I/O)
1	2	1 & 2	1	5 & 6
2	3	3 & 4	2	7 & 8

8.2.1 Setpoint Controller – Rate Control

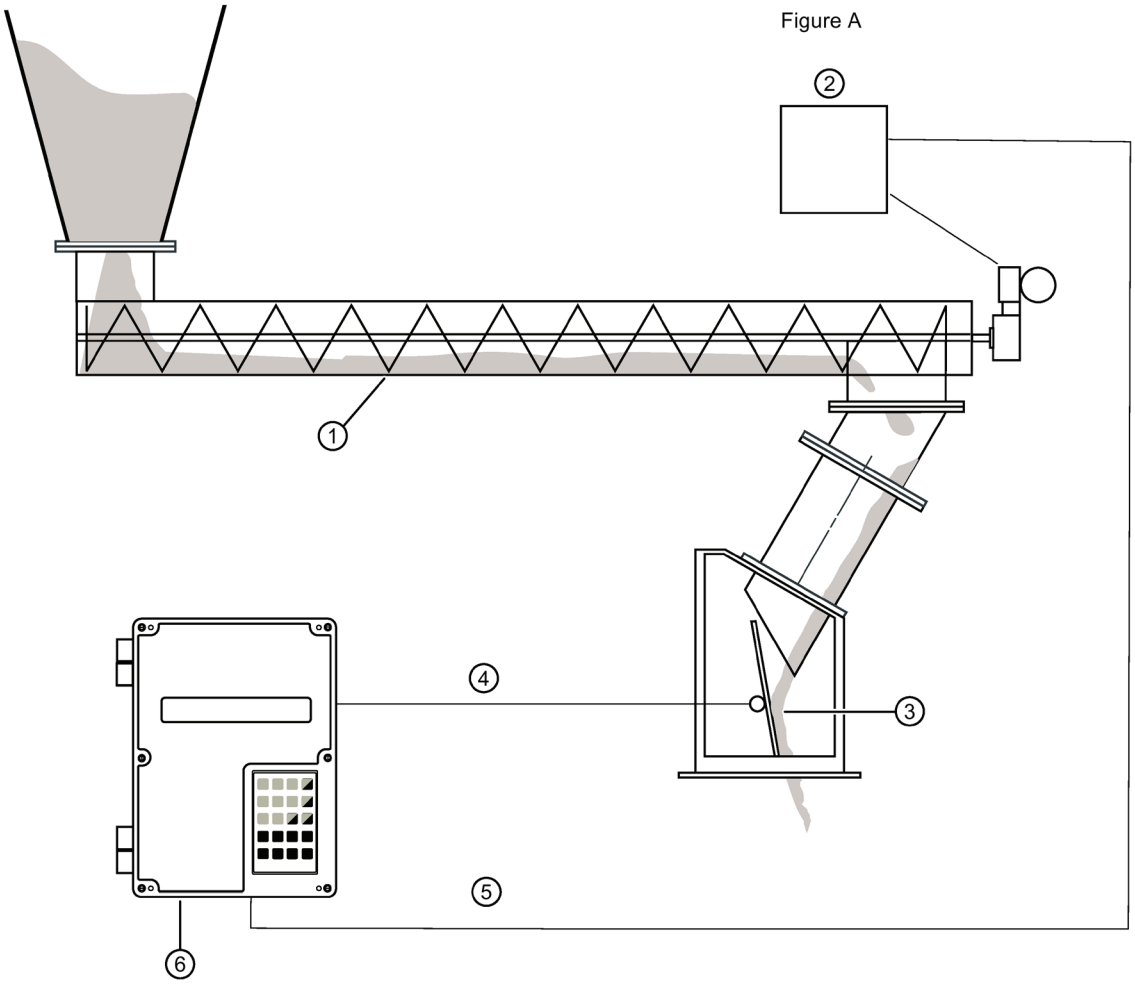

① Screw conveyor
② Motor speed controller
③ Impact force
④ Process variable (rate)
⑤ PID O/P demand rate
⑥ Optional remote setpoint

	Parameter	Index			Choices
		01	02	03	
Controller Selection	P400–	1	0[f]	----	0=Off, 1=Man, 2=Auto
Process Variable Source	P402–	1[f]	1[f]	----	1=Rate, 2=mA I/P 1, 3=mA I/P 2
Setpoint Configuration	P414–	0*	0[f]	----	0=Local, 1=mA I/P 1, 2=mA I/P 2
mA O/P Function	P201–	1[f]	2	1[f]	1=Rate, 2=PID
mA I/P Function	P255–	0*	0[f]	----	0=Off, 1=PID Setpoint, 2=PID Process Variable

*Factory setting is 0 but value is set to 1 for Remote Setpoint operation.

Default Value = [f]

Comments:

1. Connect signal to controlled device to mA O/P 2.
2. For Remote Setpoint (optional). Connect remote 4–20 mA setpoint to I/P mA 1.

8.2.2 Setpoint Controller – Rate and Additive Control

Figure B

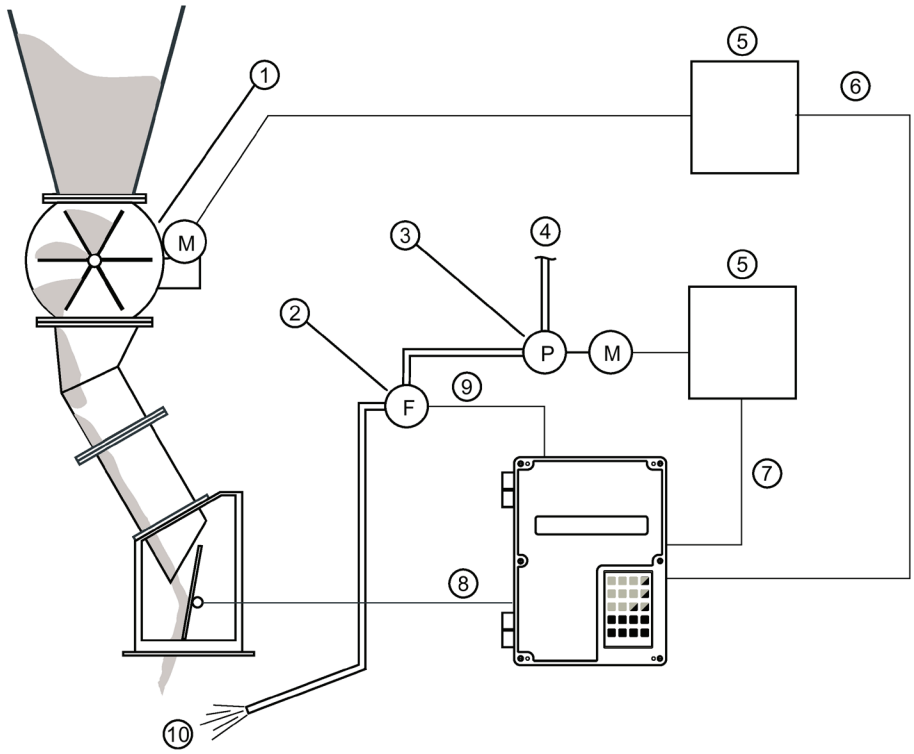

① Rotary feeder (primary product)
② Liquids flowmeter
③ Pump
④ Additive product
⑤ Motor speed controller
⑥ PID-01 O/P
⑦ PID-02 O/P
⑧ Rate (PV)
⑨ Flow (PV)
⑩ To mixing device

	Parameter	Index			Choices
		01	02	03	
Controller Selection	P400–	1	1	----	0=Off, 1=Man, 2=Auto
Process Variable Source	P402–	1[f]	2	----	1=Rate, 2=mA I/P 1, 3=mA I/P 2
Setpoint Configuration	P414–	0	2	----	0=Local, 1=mA I/P 1, 2=mA I/P 2
mA O/P Function	P201–	1[f]	2	2	1=Rate, 2=PID
mA I/P Function	P255–	2	1	----	0=Off, 1=PID Setpoint, 2=PID Process Variable
Remote Ratio	P418–	100[f]	100[f]	----	Setpoint=% of input

Default Value = [f]

Comments:

1. Connect primary rate controlled device to mA O/P 2
   - Connect additive rate controlled device to mA O/P 3
   - Connect additive process variable to mA I/P
   - Hardwire mA O/P 1 to mA O/P 2
2. Ratio of Additive to Primary product may be adjusted by changing P418–02

8.2.3 Setpoint Controller – Master/Slave Control

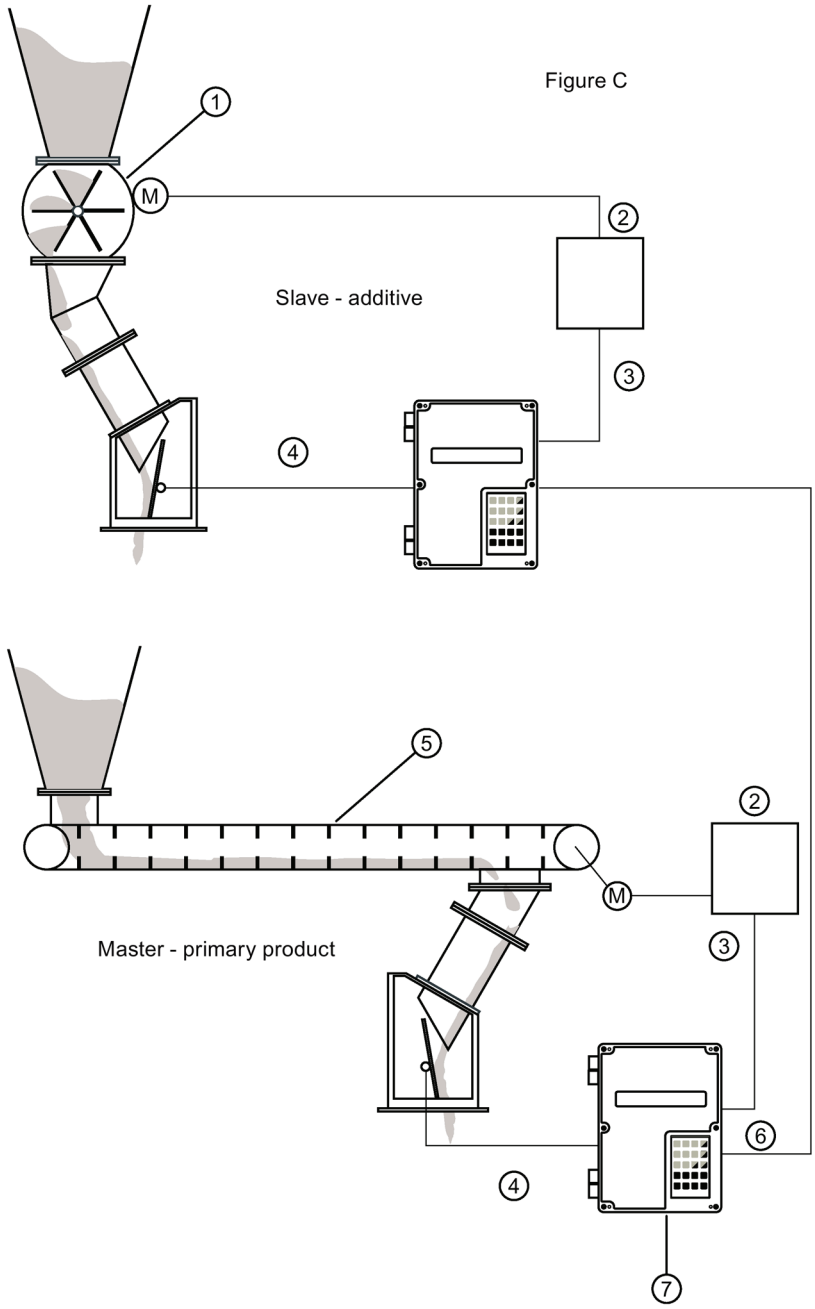

① Rotary feeder
② Motor speed controller
③ PID-01 O/P
④ Process variable (rate)
⑤ Drag conveyor
⑥ rate O/P
⑦ Optional remote setpoint

8.2.4 SF500 - Master

	Parameter	Index			Choices
		01	02	03	
Controller Selection	P400–	1	0[f]	----	0=Off, 1=Man, 2=Auto
Process Variable Source	P402–	1[f]	1[f]	----	1=Rate, 2=mA I/P 1, 3=mA I/P 2
Setpoint Configuration	P414–	0[f]	0[f]	----	0=Local, 1=mA I/P 1, 2=mA I/P 2
mA O/P Function	P201–	1[f]	2	1[f]	1=Rate, 2=PID
mA I/P Function	P255–	0[f]	0[f]	----	0=Off, 1=PID Setpoint, 2=PID Process Variable
Remote Ratio (optional)	P418–	100[f]	100[f]	----	Setpoint=% of input

Default Value = [f]

Comments:

1. Connect Rate output of SF500-Master mA O/P 1, or mA O/P 3 to mA I/P 1 of SF500-Slave. Connect signal to controlled device from mA O/P 2.
2. For Remote Setpoint on Rate Control (optional) – connect remote 4–20 mA setpoint to mA I/P 1. Ratio of Primary product to remote setpoint may be adjusted by changing P418–01.

8.2.5 SF500 - Slave

	Parameter	Index			Choices
		01	02	03	
Controller Selection	P400–	1	0[f]	----	0=Off, 1=Man, 2=Auto
Process Variable Source	P402–	1[f]	1[f]	----	1=Rate, 2=mA I/P 1, 3=mA I/P 2
Setpoint Configuration	P414–	1	0[f]	----	0=Local, 1=mA I/P 1, 2=mA I/P 2
mA O/P Function	P201–	1[f]	2	1[f]	1=Rate, 2=PID
mA I/P Function	P255–	1	0[f]	----	0=Off, 1=PID Setpoint, 2=PID Process Variable
Remote Ratio (optional)	P418–	100[f]	100[f]	----	Setpoint=% of input

Default Value = [f]

Comments:

1. Connect primary rate controlled device to mA 2 O/P.
2. Ratio of Additive to Primary product may be adjusted by changing P418–01.

8.3 Setup and Tuning

Before proceeding, it would be beneficial to qualify and quantify the terms you will encounter in the setup and tuning of the control system.

8.3.1 Proportional Control (Gain), P

The P term on the SF500 adjusts the control output, based on the difference between the set point and the measured flow rate. A higher P term makes the SF500 more sensitive and faster to react to changes or disturbances. If set too high, the SF500 becomes less stable, and more susceptible to oscillations in the control output.

- allowable input range: 0.000 to 2.000
- typical operating range: 0.300 to 0.600
- default value: 0.400

The control output cannot reach the setpoint using only the P term. Since the P term acts on the difference between the **setpoint** and **process variable**, a small difference between these two always exists and the difference is never zero. A small P term can get the process very close to set point, but this takes a long time. At minimum, an I term is required to eliminate the offset created by the P term.

8.3.2 Integral Control (Automatic Reset), I

The I term on the SF500 is used to increase or reduce the amount of control output to eliminate the offset caused by the P term. The I term acts on the accumulation of the error over small increments of time. As the process reaches setpoint and the error becomes small, the effect of the I term decreases. A higher I term allows the SF500 to react to changes faster, but can also make it less stable.

- allowable input range: 0.000 to 2.000
- typical operating range: 0.100 to 0.300
- default value: 0.200

The P and I terms together can make a suitable control algorithm and for many applications, they work fine. However, if faster response to changes is desired, it is necessary to use larger P and I terms. Unfortunately, larger terms can make the system unstable. A derivative term is needed to influence the control output as the process variable approaches the set point.

8.3.3 Derivative Control (Pre-Act or Rate), D

The D term on the SF500 influences the control output based on changes in the magnitude and direction of the change in error. If there is a constant error, the D term has no effect. As the error gets larger, the D term combines with the P term to make the SF500 control output respond faster. When the error is getting smaller, the D term acts to reduce the amount of control output to help prevent overshooting the set point. In general, a higher P term requires a larger D term.

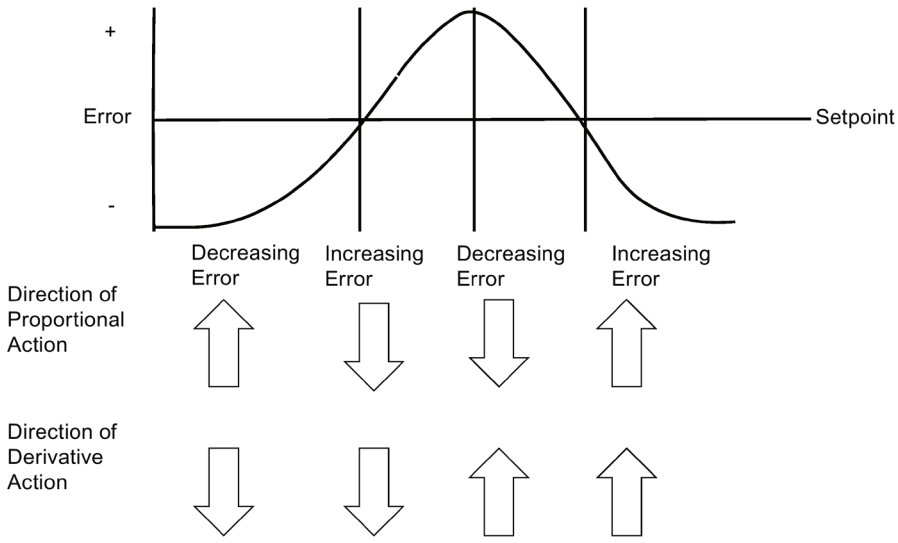

- allowable input range: 0.000 to 1.000
- typical operating range: 0.010 to 0.100
- default value: 0.050

The result of the derivative action is that it can make a system more responsive and more stable at the same time.

8.3.4 Feed Forward Control, F

The F term is used to adjust the control output based on a setpoint change. The use of this term can make the system reach the new setpoint faster. If the term is not used, the system responds using the P, I, and D terms only. The difference between the new setpoint and the process variable is the error and the control algorithm responds to eliminate this new error.

When the F term is used and a new setpoint is entered, a proportion of the difference between the new setpoint and the process variable is automatically added on to the control output. This shifts the process variable closer to the new setpoint faster than using the P, I, and D terms alone. This is done on a one-time basis.

- allowable input range: 0.000 to 1.000
- typical operating range: 0.250 to 0.550
- default value: 0.300

The PID control function of the SF500 can be configured to operate in several modes.

- controller output: direct acting
- feedback: rate or external
- control: local or remote (ratio) setpoint

8.4 PID Setup and Tuning

Proper tuning of the control PID terms is essential to system operation and optimum performance from the feeder. The recommended procedures for tuning the PID control terms at initial startup are described in this section.

Note

- Meet Zero and Span criteria.
- Set controller (P400=1) to manual and adjust the output for 0% flow (using the 4 and 8 keys). Material must not flow through flowmeter.
- Shut off the prefeed to, or ensure that no material is fed into the flowmeter.

8.4.1 Initial Start Up

Although the default values of the P, I, D, and F terms suit the majority of applications, some tuning is necessary.

There are several techniques and procedures for tuning conventional PID controllers; some work better depending upon the application. We recommend using **closed-loop cycling** for the SF500 integrator/controller for feed rate control. First, tune the P term while disabling the I and D terms. Then add and tune the I term, then the D term.

Use this procedure:

1. With the P term set to its default value of 0.400, disable the I, D, and F terms by setting them to 0.000.
2. Enter a feed rate setpoint that is 30% of the designed maximum flow rate.
3. Start the pre-feeder and observe the time it takes the pre-feeder to reach setpoint. Observe the oscillation around setpoint.

4. Adjust the P term accordingly for consistent oscillation and error. Progressively decrease the P term value if there is too much oscillation and error. Likewise, increase the value if the error is not consistent and oscillating around the setpoint. Refer to figures 1, 2, and 3 below.

Figure 1

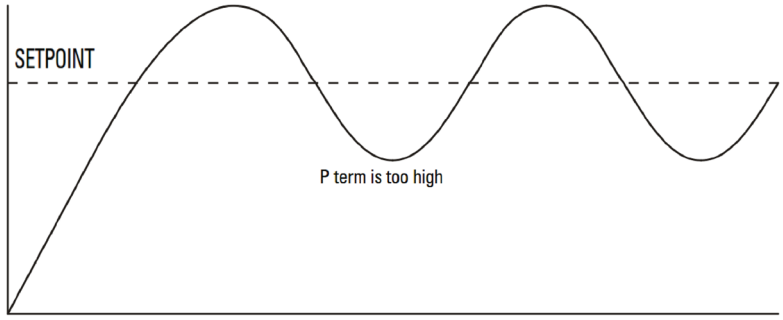

Figure 2

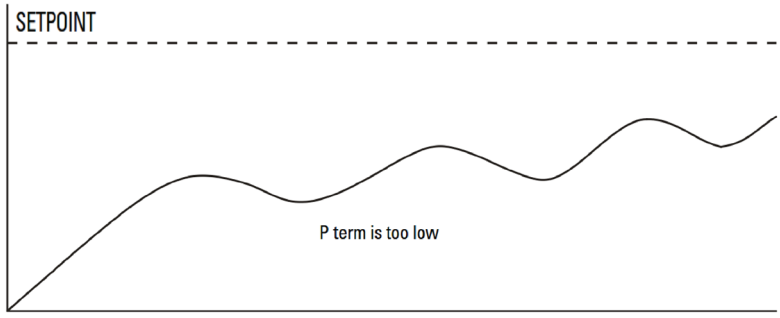

Figure 3

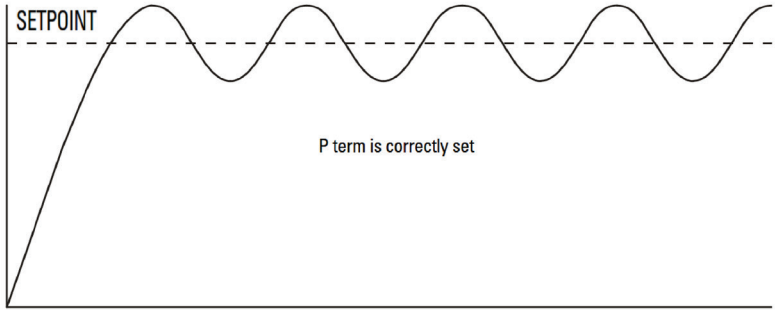

5. Once the P term value is set to give the control output of the SF500 consistent oscillation and the error is at its minimum, turn the pre-feeder off.
6. The I term value can now be set. Begin by entering the default value of 0.2.
7. Restart the feeder (test weights still applied) and feed rate setpoint entered.

8. Again observe the oscillation of the control output. Compare results to the figures 4, 5 and 6 below.

Figure 4

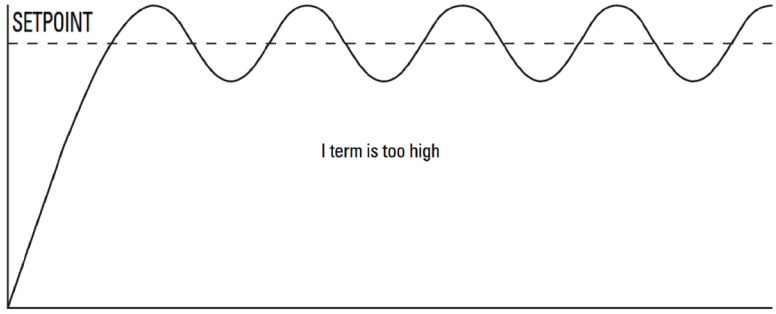

Figure 5

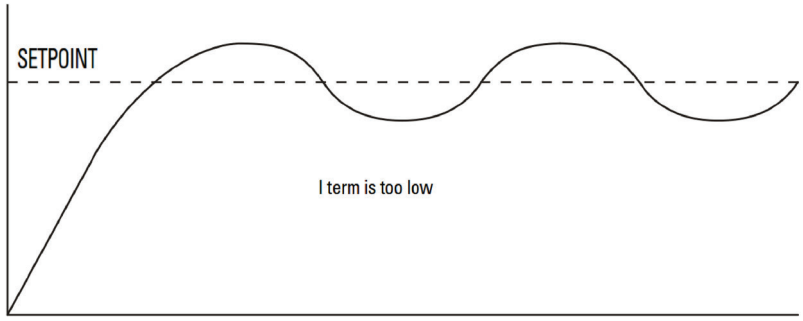

Figure 6

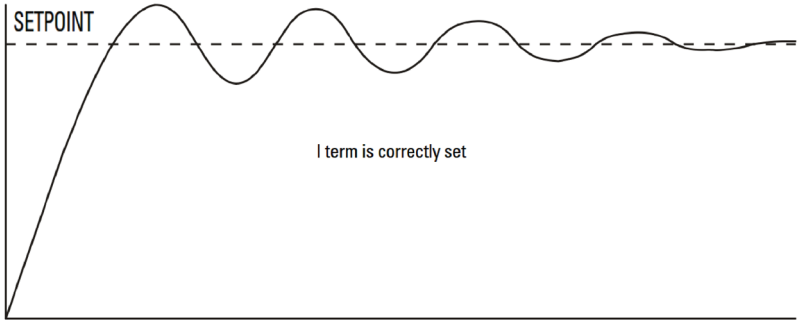

9. The D term is not critical in most pre-feeder applications. The purpose of the D term is to anticipate where the process is heading by looking at the time, rate and direction of change of the process variable. The D term becomes very useful in applications where the material control point is far away from the measuring point, e.g. a long screw feeder more than a few seconds process time from the flowmeter.

A properly set D term makes the initial oscillations around the setpoint smaller, as in figure 6. A D term set too high induces high oscillations, as in figure 4. Omission of the D term, or set too low, shows no effect on the system.

10. The above closed loop cycling procedure allows ease in start up, but final adjustments may be necessary in actual process operation.

8.5 Programming

The SF500 is software ready, however, in addition to programming parameters P001 through P017, the controller function must be specifically programmed to take advantage of the PID algorithms.

The SF500 offers programming for two separate PID controls, 1 and 2. The controller being programmed is identified by the index to the parameter number. For example, P400–01 indicates that PID for control system 1 is accessed.

Note

All programming should be done in the PID manual mode.

Access

```
P400-01 PID System                    E
Select: 0-Off, 1-Manual, 2-Auto       0
```

Select 1-manual to program PID parameters

Off disables the PID parameter set, P401 to P418. They are not accessible.

Manual: the control output is the manual output P410.

Auto: engages the PID controller function. This can also be done using the following key:

Note

For the mA output:

- mA output 2 (P201-02) is normally reserved for controller 1. The signal is output at terminals 1 and 2 on the mA I/O board.
- mA output 3 (P201-03) is normally reserved for controller 2. The signal is output at terminals 3 and 4 on the mA I/O board.

```
P201-02 mA Output Function            E
Select: 1-Rate, 2-PID                 1
```

Select the PID function.

Note

For the mA input:

- mA input 1 is an external signal normally reserved for controller 1. The signal is input at terminals 5 and 6 on the mA I/O board.
- mA input 2 is an external signal normally reserved for controller 2. The signal is input at terminals 7 and 8 on the mA I/O board.

```
P250-01 mA Input Range                E
Select 1- 0 to 20, 2-4 to 20          2
```

Select the appropriate range for the mA input signal.

```
P255-01 mA Input Function             E
Select: 0, 1-PID SP, 2-PID PV         0
```

Assign either 1: PID setpoint, or 2: process variable as the function of the mA input.

```
P401-01 PID Update Time               E
Readings between PID Updates          1
```

Enter the value, for example, nominal value of 1.

```
P402 Process Variable Source          E
1- Rate, 2-mA In1, 3-mA In2
```

Select the source. Rate is an internal value.

```
P405-01 Proportional Term             E
Enter                                 0.40
```

Enter the value for the proportional term, for example, nominal value of 0.4.

```
P406-01 Integral Term                E
Select 1- 0 to 20, 2-4 to 20         0.2
```

Enter the value for the integral term, for example, nominal value of 0.2.

```
P407-01 Derivative Term              E
Enter                                0.05
```

Enter the value for the derivative term, for example, nominal value of 0.05.

```
P408-01 Feed Forward Term            E
Enter                                0.3
```

Enter the value for the feed forward term, for example, nominal value of 0.3.

```
P410-01 Manual Mode Output           E
Current Output Value                 0
```

% value of output during manual operation, P400 = 1.

```
P414-01 Setpoint Configuration       E
0-Local, 1mA In                      0
```

Selection of setpoint source: 0 = local (keypad or Dolphin Plus), 1 = mA input

Local: the setpoint is the value entered into P415

mA Input 1: the setpoint is the mA value on input 1, terminals 5 and 6 on the mA I/O board.

mA Input 2: the setpoint is the mA value on input 2, terminals 7 and 8 on the mA I/O board.

```
P415-01 Local Setpoint Value         E
Enter Setpoint                       0
```

Enter the setpoint value in engineering units. **Not applicable if P414 = 1**.

```
P416-01 External Setpoint            E
Setpoint                             0
```

Current setpoint value in engineering units, obtained from the mA input.

```
P418-01 Remote Setpoint Ratio          V
Enter % of Master Output               100.000
```

Increase or decrease to scale input setpoint, if desired.

```
P250-01 mA Input Range                 E
Select 1- 0 to 20, 2-4 to 20           2
```

Select the appropriate range for the mA input signal.

```
P255-01 mA Input Function              E
Select 0, 1-PID SP, 2-PID PV           0
```

Assign either 1: PID setpoint, or 2: process variable as the function of the mA input.

Note

The PID setpoint can be modified while in **RUN** mode using the up/down arrow keys.

Batching

9

The batching process, as it relates to the SF500 operation, can be defined as the transfer of a predetermined quantity of material.

The process supports a count up operation (P560), in that the total (totalizer 5) begins at zero and increments up to the programmed setpoint (P564). A relay (RL1 through 5) programmed as the batch setpoint function (P100 = 8) is actuated when the material total reaches the setpoint. The relay contact acts as an interlock to the material feed to end the batch.

Another relay can be programmed as a pre-warn alarm (P100 = 7), to alert the process that batch end is near. The relay is actuated when the material total reaches the prewarn setpoint (P567) at some practical value below the batch setpoint. The pre-warn function is enabled / disabled from the batch process through P566.

For batch operations, the following must be addressed:

- connections
- programming
- operation

9.1 Connections

9.1.1 Typical Ladder Logic

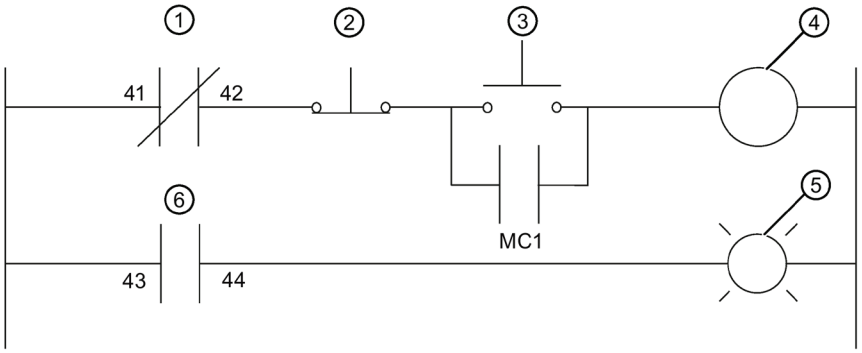

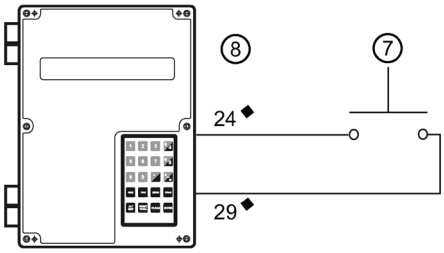

* Typical relay assignment. Relays 1-5 are available for batch setpoint or pre-warm alarm function.

♦ Typical auxiliary input assignment. Inputs 1- 5 are available for batch reset.

① SF500 / RL1* batch stop

② Stop

③ Start

④ Motor contactor / MC1

⑤ Alarm

⑥ SF500 / RL2* pre-warn

⑦ Batch reset

⑧ SF500/ aux 1

9.2 Programming

The pre-warn function is optional.

The setpoint associated with the pre-warn relay is entered in P567, batch setpoint.

The setpoint associated with the batch relay is entered in P564, batch pre-warn setpoint.

Batch Operation	
Access P100, relay function	select relay (1 – 5)
	select function 7, pre-warn
Access P560 Batch Mode Control	select 1, enable batch operation
if batch pre-warn is selected access P567, batch pre-warn setpoint	enter the pre-warn total
Access P568 Batch Pre-act	set to OFF (0) or AUTO (1) or manual (2)

Relays	
Access P100, Relay Function	select relay (1 – 5)
	select function 7, Pre-Warn

9.3 Operation

Once the SF500 relays are connected to the process logic and it is programmed, the SF500 is ready for totalizing the batch and stopping the process when the batch setpoint is reached. The batch operations *start, pause, resume,* and *cancel* are controlled externally by the process control (e.g. PLC).

Place the unit in the **RUN** mode.

Press the following key until the batch screen is displayed:

```
Rate 0.00 kg/h                                    SP: 20.000
Batch 0.00 kg
```

For example, relay 1 is programmed for pre-warn, P100-1=7.

Start running the batch.

The display will show the rate of material flow and the batch total, as well as the batch setpoint. If pre-warn is used, relay contact is open.

When the batch total reaches the pre-warn setpoint, if programmed, the alarm event is removed and the assigned relay contact is closed.

```
Rate 123.4 kg/h                                    SP: 20.000
Batch 17.00 kg                                     ALM 1
```

The process continues. When the batch total reaches the batch setpoint, the alarm event is displayed and the assigned relay is actuated (contact opened). Typically the relay contact would be integrated into the batch control logic to end the process.

```
Rate 123.4 kg/h
Batch 20.00 kg                                     ALM 12
```

For example, relay 2 is programmed for batch setpoint, P100-2=8.

When the next batch is to be run, "pressing RESET TOTAL and then CLEAR on the local keypad", or providing a momentary contact closure across an auxiliary input (programmed as batch reset, P270 = 8), sets the alarm display and resets the batch total to zero, and the relay contact to its closed state.

```
Rate 0.00 kg/h                                     SP: 20.000
Batch 0.00 kg
```

Note

- The batch totalizer can be viewed as a read-only parameter (931–05), using single parameter access through any programmed communication port.
- The batch setpoint can be modified in **RUN** mode using the up/down arrow keys.

9.3.1 Pre-act Function

If repetitive batches are being run, the pre-act function (P568) can be enabled to automatically trip the setpoint relay before or after the batch setpoint is reached in order to assure best batch accuracy. Or, in manual mode, enter a set value to cause the batch setpoint to pre-act at a designed accumulation.

Communications 10

The SF500 is a sophisticated flowmeter integrator that can communicate status back to a SCADA system using a serial devices such as radio modems, leased lines, or dial-up modems.

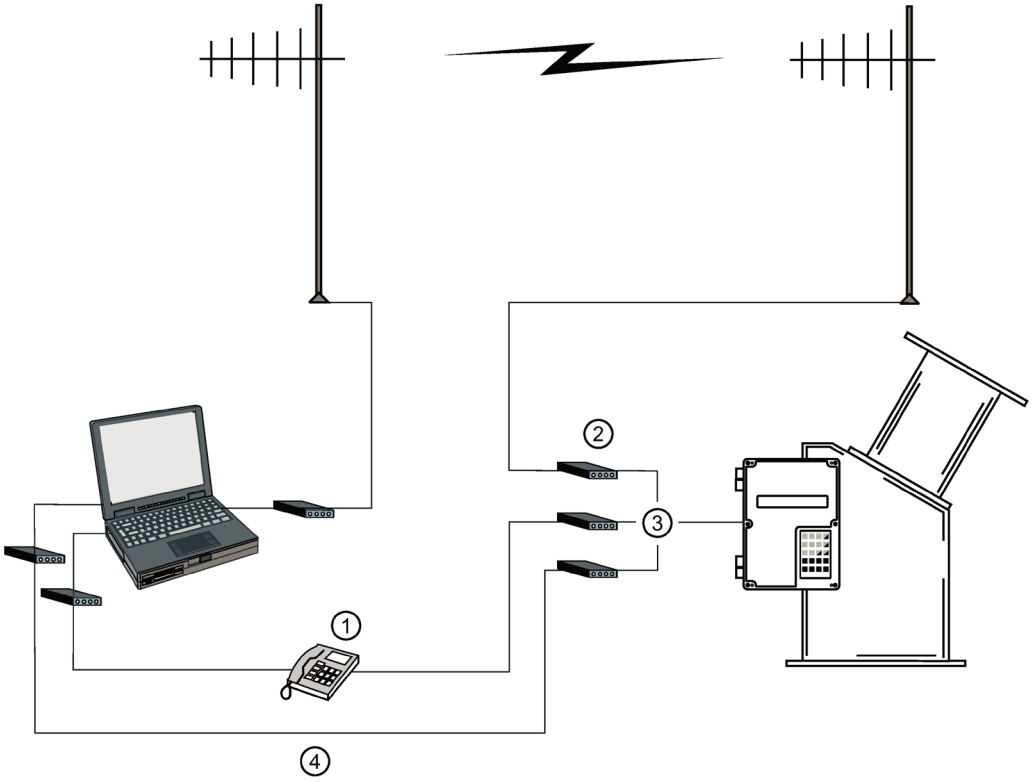

① Dial-up modem
② Radio modem
③ Or
④ Leased line modem

The SF500 supports two protocols: Dolphin and Modbus. Dolphin is a proprietary Siemens protocol designed to be used with Dolphin Plus. Modbus is an industry standard protocol used by popular SCADA and HMI systems.

10.1 SF500 and SmartLinx®

In addition to three onboard communication ports, the SF500 is compatible with Siemens SmartLinx® communication modules which provide an interface to popular industrial communication systems.

This section only describes the onboard communications. For more information on SmartLinx®, please consult the appropriate SmartLinx® manual.

10.2 Connection

WARNING

When a SmartLinx® card is installed and P799 = 1, the parameters that the SmartLinx® card is writing to the SF500 will be continuously updated. Therefore, if you connect a SmartLinx® card to the SF500, set P799 = 1 and do not write anything to the SmartLinx® card, your setpoints will be 0.

There are three serial communication ports on the SF500:

Port	Description
1	RS-232, Terminals 31 to 34
2	RS-485, terminals 35 to 40
3	RS-232, RJ-11 modular telephone jack

Refer to Installation (Page 12) for wiring diagrams specific to each port.

10.2.1 Wiring Guidelines

Improper wiring and choice of cables are the most common sources of communication problems. Listed below are some suggested guidelines:

- 15 meters (50 feet) for RS-232
- 1200 meters (4000 feet) for RS-485
- Ensure that communication cable is separate from power and control cables (do not tie wrap your RS-232 cable to the power cable or have them in the same conduit).
- cable is shielded and connected to ground at one end only
- 24 AWG (minimum)
- follow proper grounding guidelines for all devices on the bus
- use good quality communication grade (shielded twisted pairs) cable that is recommended for RS-232.

10.3 Configuring Communication Ports

The SF500 communications ports are set up by a series of parameters (P770 – P789) which are indexed by port.

The communication parameters are indexed to the following:

Port	Description
1	RS-232, Terminals 31 to 34
2	RS-485, terminals 35 to 40
3	RS-232, RJ-11 modular telephone

Note

- Changes to these parameters do not take effect until the power to the unit is turned off and then back on.
- *f* is used to indicate factory settings

10.3.1 P770 Serial protocols

The communications protocol used between the SF500 and other devices for the selected port, ports 1 to 3 (P770–01 to –03).

The SF500 supports Siemens' proprietary Dolphin data format as well as the internationally recognized Modbus standard in both ASCII and RTU formats. It also supports direct connection of a printer.

The Siemens protocol is compatible with the Dolphin Plus configuration program. For information on this PC product see the Siemens website Process Automation (http://www.siemens.com/processautomation/).

The Modbus protocol is an open standard developed by AEG Schneider Automation Inc. Specifications are available from their web site Modicon (http://www.modicon.com/).

Other protocols are available with optional SmartLinx® cards.

Values

$0^{f\ (01\ and\ 02)}$ communications disabled

$1^{f\ (03)}$ Siemens "Dolphin" protocol

2 Modbus ASCII slave serial protocol

3 Modbus RTU slave serial protocol

4 printer

Note

SF500 must be in **RUN** mode to allow for the print operation.

10.3.2 P771 Protocol address

Note

Applicable only to ports programmed for Modbus RTU or Modbus ASCII (P770).

The unique identifier of the SF500 on the network for the selected port, ports 1 to 3 (P771–01 to –03).

For devices connected with the Siemens Milltronics protocol this parameter is ignored.

For devices connected with a serial Modbus protocol this parameter is a number from 1 to 247. It is up to the network administrator to ensure that all devices on the network have unique addresses.

Do not use the value **0** for Modbus communications as this is the broadcast address and is inappropriate for a slave device.

Values

0 to 9999 (*f* = 1)

10.3.3 P772 Baud Rate

The communication rate with the master device for the selected port, ports 1 to 3 (P772- 01 to –03).

The baud rate chosen should reflect the speed of the connected hardware and protocol used.

Values

1[f (01 and 02)] 4800 baud

2 9600 baud

3[f (03)] 19,200 baud

10.3.4 P773 Parity

The serial port parity for the selected port, ports 1 to 3 (P773-01 to –03).

Ensure that the communications parameters are identical between the SF500 and all connected devices.

For example, many modems default to N-8-1 which is No parity, 8 data bits, and 1 stop bit.

Values

0[f] none

1 even

2 odd

10.3.5 P774 Data bits

The number of data bits per character for the selected port, ports 1 to 3 (P774-01 to –03).

Protocol	P744 Value
Modbus RTU	8
Modbus ASCII	7 or 8
Dolphin Plus	7 or 8

Note

Use 8 data bits when using port 2.

Values

5 to 8 (*f* = 8)

10.3.6 P775 Stop bits

The number of bits between the data bits for the selected port, ports 1 to 3 (P775-01 to -03).

Values

1 or 2 (*f* = 1)

10.3.7 P778 Modem attached

Sets port 1 (P778-01) to use an external modem.

Any connected modem must be set up to auto-answer incoming calls. The SF500 does not automatically configure the modem.

Autobaud (enabled by P778=1)

When the SF500 is powered up or the P779 Modem Inactivity Timeout expires three carriage returns are sent to the modem to allow it to set its serial connection to P772 Baud Rate.

If a connection is made with the modem at a different baud rate the SF500 will attempt to use that rate instead of the P772 value. For troubleshooting purposes the baud rate on the modem can be hard-coded to the rate set on the SF500. See your modem documentation for information on fixing the baud rate.

Values

0[f] no modem connected

1 modem connected

10.3.8 P779 Modem idle time

Sets the time in seconds that the SF500 will keep the modem connected even though no activity is happening.

To use this parameter ensure that P778=1.

This parameter allows for reconnection to the SF500 unit after an unexpected disconnect. Ensure that the value is low enough to avoid unnecessary delays when an unexpected disconnect occurs but long enough to avoid timeout while you are still legitimately connected.

Hanging Up

If the line is idle and the P779 Modem Inactivity Timeout expires then the modem is directed to hang up the line. This is done with the Hayes commands:

- two second delay
- +++
- two second delay
- ATH

Ensure that P779 is set longer than the standard polling time of the connected master device.

0 disables the inactivity timer.

Values

0-9999: 0 (*f* = 1)

10.3.9 P780 RS-232 Transmission interval

Note

Applicable only to ports programmed for printer communication (P770).

Sets the interval between transmissions to be applied to the selected port, ports 1 to 3 (P780-01 to –03).

Enter the period in minutes. (*f* = 0)

10.3.10 P781 Data message

Note

Applicable only to ports programmed for printer communication (P770).

Sets the data message to be delivered via the selected port, ports 1 to 3 (P781-01 to -03).

All messages and printouts include time and date.

Entry:

0[f] = no message

1 = rate

2 = total[1)]

3 = rate and total[1)]

4 = batch total (totalizer 5)

5 = quick start parameters (P001 – P017)

6 = all parameters

[1)] Totalizer 1 and/or 2 as set by P647, Totalizer Display.

10.3.11 P799 Communications Control

Assigns programming control either locally through the keypad or Dolphin Plus (P770 = 1), or remotely through Modbus protocol (P770 = 2 or 3) or SmartLinx®.

Entry:

0 = local

1 = remote

WARNING

When a SmartLinx® card is installed and P799 = 1, the parameters that the SmartLinx® card is writing to the SF500 will be continuously updated. Therefore, if you connect a SmartLinx® card to the SF500, set P799 = 1 and do not write anything to the SmartLinx® card, your setpoints will be 0.

10.4 Dolphin Protocol

The protocol is available on all communications ports on all units. This protocol is not available for third party use.

The primary use of this protocol is to connect the SF500 to Siemens' Dolphin Plus configuration software.

Dolphin Plus Screen Shot

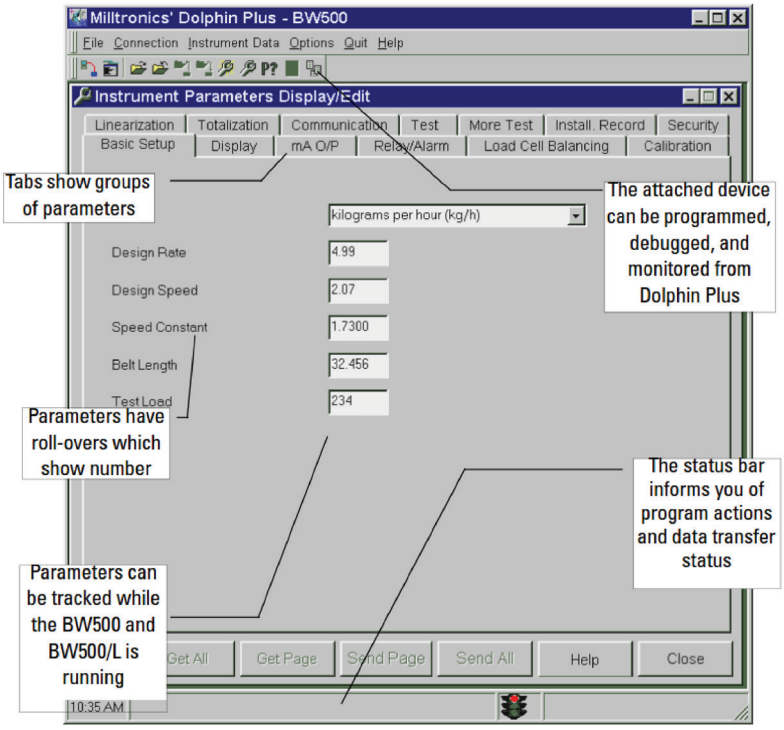

10.5 Modbus RTU/ASCII Protocol

Modbus is an industry standard protocol owned by Schneider Automation Inc.[1] and is used throughout process control industries for communication between devices. Modbus RTU and Modbus ASCII are both master-slave type protocols. SF500's Modbus is a slave unit.

SF500 supports both the RTU and ASCII version of Modbus and attempts to automatically detect the type when a connection is made.

Note

- Host should wait at least 500 ms between message polls to the SF500.
- For Modbus RTU, the host should wait at least 1000 ms for a response from the SF500. In Modbus ASCII mode the suggested timeout is 1500 ms.

At the time of publication of this manual, the Modbus Protocol was located under products / technical publications / communications products / Modbus protocol.

Note

Siemens does not own the Modbus RTU protocol. All information regarding that protocol is subject to change without notice.

[1)] Modicon is a registered trademark of Groupe Schneider.

A brief description of Modbus RTU and Modbus ASCII is given in this manual. For a full description of the Modbus protocol, contact your local Schneider representative. Also you may try their website (http://www.modicon.com/).

10.5.1 How Modbus Works

As mentioned above, Modbus is a master-slave type protocol. This can also be referred to as a query-response protocol. What both of these terms mean is that on the network, there is one master which requests information from multiple slave devices. The slave devices are not permitted to talk unless they have been asked for information. When responding, the slaves will either give the information that the master has requested or give an error code consisting of why it can not give the information or that it did not understand the request. Refer to Error Handling (Page 120).

All SF500 information is mapped into the Modbus holding registers so that Modbus function code 03 can read from them and Modbus function code 06 and 16 can write to them.

10.5.2 Modbus RTU vs. ASCII

There are two main differences between Modbus RTU and Modbus ASCII. The first is that Modbus RTU encodes the message in 8-bit binary, while ASCII encodes the message in ASCII characters. Therefore, one byte of information would be encoded into 8 bits for RTU and into two ASCII characters for ASCII (which would be two 7-bit units). Secondly, the error checking method is different (see below).

Modbus RTU has the advantage that it has a much greater data throughput than ASCII. Modbus ASCII has the advantage that it allows time intervals of up to one second to occur between characters without causing an error. Either protocol works with the SF500.

10.5.3 Modbus Format

Note

When using a commercial Modbus driver all of the message details are handled for you.

To give you a better idea of how a Modbus message works, a master on network would send a message in a format similar to this:

Station address	Function code	Information	Error check

Where:

Station address	the network address of the slave being accessed
Function Code	number that represent a Modbus command, either: 03 read function 06, 16 write functions
Information	depends on function code
Error Check	Cyclical Redundancy Check (CRC) for RTU and Longitudinal Redundancy Check (LRC) for ASCII

There is more to the frame than is described above, this is shown to give the user a general idea of what is going on. For a full description, refer to the Modbus specifications.

10.5.4 Modbus Register Map

The memory map of the SF500 occupies the Modbus holding registers (R40,001 and up).

The SF500 makes it easy for users to get useful information via Modbus. The following chart gives an overview of the different sections.

Register Map for SF500**:**

Map Legend	Description
Type	Arbitrary classification of registers.
Description	Brief description or title of associated register.

Map Legend	Description
Start	Provides the starting address for the register(s) where the parameter values are to be read from or written to.
Number R	The number of registers required to read or write the complete parameter value. Where the number of registers (6) are addressed in incrementing sequence from the start register.
Parameter Values	Refer to Parameter Values (Page 122).
Read	Identifies the read / write capability for the register being addressed.
Reference	Provides reference documentation for the register being addressed.

Type	Description	Start	# R	Parameter Values	Read	Reference
Format	Format Word for 32 bit variables	40,062	1	0 - 1	r/w	Refer to **Modbus Register Map (cont'd)** section given below.
ID	Device Identifier	40,064	1	2	r	Refer to **Modbus Register Map (cont'd)** section given below.
Handshaking Area (Parameter Access)	Parameter	40,090	1	0-999	r/w	Refer to the **Modbus Register Map (cont'd)** section given below.
	Primary Index	40,091	1	0 - 9	r/w	
	Secondary Index	40,092	1	0 - 9	r/w	
	Format Word	40,093	1	bit mapped	r/w	
	Read Value (word 1)	40,094	2	32 bits	r	
	Write Value (word 1)	40,096	2	32 bits	r/w	
Date and Time	YYYY	41,000	1	1996-2069	r/w	Refer to **the Date and Time (R41,000 – 41,006)** section given below and also P008 (Page 123)
	MM	41,001	1	1 - 12	r/w	
	DD	41,002	1	1 - 31	r/w	
	hh	41,003	1	00 - 23	r/w	Refer to the **Date and**
	mm	41,004	1	00 - 59	r/w	

Type	Description	Start	# R	Parameter Values	Read	Reference
	ss	41,005	1	00 - 59	r/w	**Time (R41,000 – 41,006)** section given below and also P009 (Page 124)
	Time Zone	41,006	1	-12 - 12	r/w	see P739 (Page 146)
Process Values	Rate	41,010	2	32 bits	r	Refer to the **Process Values (R41,010 – R41,048)** section given below.
	Total 1	41,016	2	32 bits	r	
	Total 2	41,018	2	32 bits	r	
	Device State	41,020	1	bit mapped	r	Refer to **the Process Values (R41,010 – R41,048)** section given below.
	Command Control	41,022	1	bit mapped	r/w	Refer to **Command Controls (41,022)** given below.
	Multi-Span Selection	41,024	1	1 - 8	r/w	Refer to Multispan (Page 135) and P365 (Page 135)**.**
	Total 1 decimal places	41,025	1	1 - 3	r/w	Refer to **Read/Write (R41,025 – R41,026) Total Decimal Places** section given below.
	Total 2 decimal places	41,026	1	1 - 3	r/w	
	Batch total	41,027	2	32 bits	r	Refer to P931 (Page 150).
	PID 1 Setpoint	41,040	2	32 bits	r/w	Refer to P416 (Page 140)**.**
	PID 2 Setpoint	41,042	2	32 bits	r/w	
	Batch Setpoint	41,044	2	32 bits	r/w	Refer to P564. (Page 141)
	Batch Prewarn Setpoint	41,046	2	32 bits	r/w	Refer to P567 (Page 141)**.**

Type	Description	Start	# R	Parameter Values	Read	Reference
I/O	Discrete Input	41,070	1	bit mapped	r	Refer to the **I/O (R41,070 – 41,116)** section given below.
	Relay Outputs	41,080	1	bit mapped		
	mA Inputs	41,090	2	0000 - 20,000	r	
	mA Outputs	41,110	3	0000 - 20,000	r	
Diagnostic	Diagnostic State	41,200	1	number code	r	Refer to the **Diagnostic (R41,200)** section given below.
	P940, load cell A, index 1	41,201	2	32 bits	r	Refer to P940 Load Cell mV Signal Test (Page 150) and P943 Load Cell A/D Reference (Page 150)
	P940, load cell B, index 2	41,203	2	32 bits	r	
	P943, index 1	41,209	2	32 bits	r	
	P943, index 2	41,215	2	32 bits	r	
	P943, index 3	41,217	2	32 bits	r	
PID Tuning	PID 1 Proportional Term	41,400	2	32 bits	r/w	Refer to P405 (Page 138).
	PID 2 Proportional Term	41,402	2	32 bits	r/w	
	PID 1 Integral Term	41,404	2	32 bits	r/w	Refer to P406 (Page 138).
	PID 2 Integral Term	41,406	2	32 bits	r/w	
	PID 1 Derivative Term	41,408	2	32 bits	r/w	Refer to P407 (Page 139).
	PID 2 Derivative Term	41,410	2	32 bits	r/w	
	PID 1 Feed Forward Term	41,412	2	32 bits	r/w	Refer to P408 (Page 139).
	PID 2 Feed Forward Term	41,414	2	32 bits	r/w	
	PID 1 Remote Setpoint Ratio	41,416	2	32 bits	r/w	Refer to P418 (Page 140).
	PID 2 Remote Setpoint Ratio	41,418	2	32 bits	r/w	

10.5.5 Modbus Register Map (cont'd)

Format (R40,062)

This value determines the format of all unsigned, double-register integers (UINT32), *except for those in the direct parameter access*.

0 indicates that the most significant byte (MSB) is given first

1 indicates that the least significant byte (LSB) is given first

For more information on this data format see below *Parameter Values* and also P742 Word Order Parameter (Page 147)

Device Identifier (R40,064)

This value identifies the Siemens device type and is “2” for the SF500.

Handshaking Area (Parameter Access)

Built into the SF500 is an advanced handshaking area that can be used to read and write 32 bit parameters.

Mapping

Parameter Read and Write (40,090 – 40,095) is a series of six registers that are used for reading and writing parameter values to and from the SF500. The first three registers are always unsigned integers representing parameters and index values. The second three registers are the format and value(s) of the parameter.

All parameters normally accessed through the hand-held programmer are available through these registers:

Address	Description
40,090	Parameter (integer)
40,091	Primary Index (integer)
40,092	Secondary Index (integer)
40,093	Format word (bit mapped)
40,094	Read value, word 1
40,095	Read value, word 2
40,096	Write value, word 1
40,097	Write value, word 2

Reading Parameters

To read parameters through Modbus follow these steps:

1. Send the parameter, its primary index, and its secondary index (usually 0) and format to registers 40,090, to 40,093.
2. Wait until you can read the above values from the registers (40,090 to 40,093).
3. Read the value from registers 40,094 and 40,095.

Writing Parameters

To read parameters through Modbus follow these steps:

1. Send the parameter, its primary index, and its secondary index (usually 0) to registers 40,090, 40,091, and 40,092.
2. Write the value to registers 40,096 and 40,097.
3. Write the desired format word to register 40.093 to enable the SF500 to interpret the value correctly.

Format Register:

Bits	Values	Description
1 - 8	0 - 2	Error Code
9 - 11	0 - 7	decimal offset
12	0/1	decimal shift, Right (0) or Left (1)
13	0/1	Numeric format: Fixed (0) or Float (1)
14	0/1	Read or Write of data, Read (0), Write (1)
15	0/1	Word order: Most Significant word first (0), Least Significant Word first (1)
16		Reserved

The bits listed above are in order from least to most significant:

16	15	14	13	12	11	10	9	8	7	6	5	4	3	2	1

For example, to format the reading so that it is shown with two decimal places shifted left, the format bits would look like this:

16	0	reserved
15	0	most significant first
14	0	read
13	1	float format

12	0	decimal offset +2
11	0	
10	1	
9	0	
8	0	no error code
7	0	
6	0	
5	0	
4	0	
3	0	
2	0	
1	0	

The value sent to the SF500 is 0000001000000000 binary or 512 decimal. The value **512** is sent as an integer to register 40,093 to format the output words 40,094 and 40,095 accordingly.

If the numeric data type is set for integer and the value contains decimal places, they are ignored. In this situation use the decimal offset to ensure that you have an integer value and then write your code to recognize and handle the decimal offset. Bits 9 to 11 indicate the number of place by which the decimal is to be shifted. Bit 12 indicates the direction by which the decimal point is shifted, left or right. For example, if the decimal offset (value of bits 9 to 11) is '2' and the shift (value of bit 12 is '0'), then the decimal point is shifted two places to the right.

Error Codes

The error codes returned in the format area are 8-bit integers found in the lowest 8 bits of the format word. This allows for 256 potential error codes.

Currently the SF500 has two error codes available:

Values	Description
0	No error
1	Data not available as percent (available as units)
2-255	Reserved

Date and Time (R41,000 – 41,006)

The date and time can be read or written in registers 41,000 to 41,006 as defined in the table above.

Example: If you are located in Toronto, Canada and would like to set the date and time to February 14, 1999, 1:30 p.m. and 42 seconds, you would write the following:

Bits	Values
R41,000	1999
R41,001	2
R41,002	14
R41,003	13
R41,004	30

Bits	Values
R41,005	42
R41,006	-5

Note

The time zone register is used only as a reference and does not affect the operation of the SF500.

Process Values (R41,010 – R41,048)

Rate and Total (R41,010 – R41,019)

The associated registers provide the readings of rate, Totalizer 1 and Totalizer 2 in engineering units as displayed in the local SF500 display.

Device State (41,020 – 41,020)

The Device State word is used to feedback the current operating state of the product. Each bit gives the state of different parts of the product, some mutually exclusive, others are not. The state should be checked to verify any device commands.

Bit #	Description	Bit Clear	Bit Set (1)
1	PID 1 Mode	Manual	Auto
2	PID 1 Freeze	No	Yes
3	PID 1 Setpoint Source	Local	Remote
4	PID 2 Mode	Manual	Auto
5	PID 2 Freeze	No	Yes
6	PID 2 Setpoint Source	Local	Remote
7	Zero	No	In progress
8	Span	No	In progress
9	-	-	-
10	-	-	-
11	-	-	-
12	-	-	-
13	Write Privileges	No	Yes
14	System Configured	Not Configured	Yes
15	Mode	Calibration Mode	**RUN** Mode
16	Totalizing	Not Totalizing	Totalizing

Command Controls (41,022 – 41,022)

The command control word is used to control the unit. Each bit gives access to a command or state as if the operator was using the keypad.

Bits initiating a command (7-12) must change state to cause the command the begin. For example, to reset totalizer 1, Bit 9 must be set to 0, then changed to 1. It can stay set or clear for any period:

Bit #	Description	Bit Clear	Bit Set (1)
1	PID 1 Mode	Manual	Auto
2	PID 1 Freeze	No	Yes
3	PID 1 Setpoint Source	Local	Remote
4	PID 2 Mode	Manual	Auto
5	PID 2 Freeze	No	Yes
6	PID 2 Setpoint Source	Local	Remote
7	Zero	No change	Start
8	Span	No change	Start
9	Reset Totalizer 1	No change	Reset
10	Reset Totalizer 2	No change	Reset
11	Reset Batch Totalizer	No change	Reset
12	Print	-	Print
13	-	-	-
14	-	-	-
15	-	-	-
16	-	-	-

WARNING

Before the SF500 can be commanded remotely, parameter P799 must be set for remote control.

Read/Write (R41,025 – R41,026) Total Decimal Places

Sets the number of decimal places (0–3) being read for Total 1, (words 41,016 and 41,017) and Total 2, (words 41,018 and 41,019).

With 3 decimal places, the largest value that can be read is 2,147,483.648.

With 2 decimal places, the largest value that can be read is 21,474,836.48.

With 1 or 0 decimal places, the largest value that can be read is 100,000,000.

Although the word registers are limited to reading a maximum value as indicated above for the defined number of decimal places, the overflow bits of Instrument_Status2 (Word 31) will only reflect an overflow condition (Bits 1 and 2 set to 1) when the decimal place is set to 2 or 3.

When set to 2 or 3, the word registers will stop accumulating at the indicated values however, the LUI will continue to totalize to a value of 100,000,000. Should this condition exist, prior to resetting the totalizer registers, be sure to observe and record the totalized value as displayed on the LUI. Not doing this could cause a reporting discrepancy in expected material totals within the process.

Once the internal totalizer registers realize a value of 100,000,000, the internal registers will perform a rollover, causing the display of the LUI to start from a value of 0. This will also cause the Instrument_Status2 word bits to reset to 0.

Example: R41,025

Bits 0 and 1 are used to indicate the number of decimal places being read in Total 1, Words 7 and 8.

Bit 15 is used to indicate if the decimal place is too large to read the total value correctly.

If three decimal places are being read in Total 1:

Bits	15	14	13	12	11	10	9	8	7	6	5	4	3	2	1	0
	0	0	1	0	0	1	0	0	0	0	0	0	0	0	1	1

If three decimal places are being read in Total 1, and the value is too large to be read with three decimal places:

Bits	15	14	13	12	11	10	9	8	7	6	5	4	3	2	1	0
	1	0	1	0	0	1	0	0	0	0	0	0	0	0	1	1

I/O (R41,070 – 41,116)

The SF500 provides I/O in the form of:

- discrete inputs
- relay outputs
- mA inputs[1]
- mA outputs[1]

[1] The standard SF500 provides only one mA output (0/4 – 20 mA). The inclusion of an optional mA I/O card provides two mA inputs (0/4 – 20 mA) and two additional mA outputs.

For the I/O, the assigned registers represent the logic status (e.g. open or closed) of the I/O as configured. Discrete inputs are configured via P270, auxiliary input function; while relay outputs are configured via P100, relay function.

The I/O are mapped into the respective input and output registers, R41,070 and R41,080, as follows:

R41,070		**R41,080**	
Input	**Bit**	**Output**	**Bit**
1	1	1	1
2	2	2	2
3	3	3	3
4	4	4	4
5	5	5	5

For the mA I/O, the assigned registers represent the mA level (e.g. 0 to 20 mA) of the I/O as registered in P911 and P914, mA output test (output value) and mA input value.

The mA I/O are mapped into the respective input and output registers:

Input	Register	Output	Register
1	R41,090	1	R41,110
2	R41,091	2	R41,111
		3	R41,112

For 0 to 20 mA I/O, the register value ranges from 0 to 20,000. For 4 to 20 mA I/O, the register value ranges from 4,000 to 20,000. If the 4 or 20 mA values have been trimmed, then the register value is adjusted accordingly; e.g. an I/O value of 22 mA would be registered as 22,000.

Diagnostic (R41,200)

Refer to Troubleshooting (Page 152)

PID Tuning (R41,400 – 41,419)

For SF500 set up for PID control, several registers have been provided for tuning. Refer to PID Control (Page 77)and the associated parameters as listed in the register map.

Note

Before you can change any of the setpoints, P799 must be set for remote control.

Parameter Values
Bit Mapped

Bits are packed into registers in groups of 16 bits (1 word). In this manual we number the bits from 1 to 16, with bit 1 being the least significant bit and bit 16 referring to the most significant bit.

16	15	14	13	12	11	10	9	8	7	6	5	4	3	2	1
MSB															LSB

32 Bit

Large numbers are put into unsigned 32 bit integers with a fixed decimal place of three. For example, a value of ‘7345’ represents a value in the SF500 ‘7.345’. The default word order is that the first word is the most significant word (MSW) and the second word (register) is the least significant word (LSW).

For example, if we read R41,431 as a 32-bit, the 32 bits would look like the following:

R41,431			R41,432		
16	MSB	1	16	LSB	1
32	32-bit integer value (UNINT32)				1

The whole is read as a 32-bit integer.

To accommodate some Modbus drivers, the most significant byte (MSB) and least significant byte (LSB) can be reversed. See **Format (R40,062)** for SF500 for details.

Text Messages

If a Siemens device parameter returns a text message, that message is converted to a number and provided in the register. The numbers are shown in the table below:

Number	Text Message as Displayed on LCD
22222	invalid value
30000	OFF
30001	ON
30002	= = = =
30003	(parameter does not exist)
30004	err
30005	err1
30006	open
30007	shrt
30008	pass
30009	fail
30010	hold
30012	hi
30013	de
30014	en
-32768	value is less than -20,000
32767	value is greater than 20,000

10.6 Modems

The SF500 has been successfully connected to several different modems. In general, the Modbus protocol is a very modem friendly protocol. This section gives some general guidelines on modems and their connection. For detailed information, see the modem documentation.

Picking Modems

There are several different types of modems; dial-up, leased line, radio-link, fiber-optic, to name the most common.

Dial-up

uses a standard analog phone line and dials the number of the receiving modem.

Lease line

come in either 2 or 4 wire types and use special phone lines that are ‘leased’ from your phone company (or you) and do not require any dialing.

Radio-link

come in many different types, but all use radio frequencies for transmitting the information.

Fiber-optic

uses a fiber-optic line to connect the two modems.

Each type of modem and each model have various characteristics. Before purchasing the modem contact the modem manufacturer and ask if they have had experience using the modems with Modbus protocol with no flow control. If they have, ask them what settings were required.

Setting up the Modems

Configure modems using software, dip switches, jumpers or a combination.

Dip switches are normally located at the back of the modem; jumpers are normally located on the motherboard and require that you remove the cover. Software normally requires you to use a standard terminal program and to connect to the RS-232 port on the modem and send special commands. The most popular command set is called the AT, or Hayes, command set.

Your modem manual should give details on how to configure it.

10.6.1 Example Setup

For a typical dial-up modem, try the following setup as a first attempt:

Master

Modem

- auto answer off (dip switch?)
- load factory default (dip switch?)
- no flow control (dip switch?)
- baud rate = 9600
- 10 data bits (probably the default)

Modbus RTU Software

- baud rate = 9600
- 8 bit
- no parity
- 1 stop bit
- dial prefix: ATDT
- Initialization command: ATE0Q0V1X05=0512=100
- Reset command: ATZ

- Hang-up command: ATHO
- Command response delay: 5 seconds
- Answer Delay: 30 seconds
- Inter-character delay: 55 ms

Slave

Modem

- auto answer on (dip switch?)
- load factory default (dip switch?)
- no flow control (dip switch?)
- baud rate = 9600
- 10 data bits (probably the default)

SF500

- set P770, port 1, to the value 3 (Modbus RTU)
- set P771, port 1, to the value 1 (Network ID 1)
- set P772, port 1, to the value 3 (Baud rate of 9600)
- set P773, port 1, to the value 0 (No Parity)
- set P774, port 1, to the value 8 (8 Data Bits)
- set P775, port 1, to the value 1 (1 Stop Bit)
- set P778, port 1, to the value 1 (Communications through Modem)
- set P779, port 1, to the value 300 (Modem Inactivity of 300 seconds)

Note

Parameters are defined the in the Installation (Page 12) section

10.7 Error Handling

Modbus Responses

When polled by a Modbus Master, a slave device will do one of the following:

1. **Not reply**.
   This means that something went wrong with the transmission of the message.
2. **Echo back the command with the correct response**.
   This is the normal response (see the Modbus specifications for more details).
3. **Return an Exception Code**.
   This reflects an error in the message.

SF500 uses the following exception codes:

Code	Name	Meaning
01	Illegal Function	The function code received in the query is not an allowable action for the slave.
02	Illegal Data Address	The data address received in the query is not an allowable address for the slave.
03	Illegal Data Value	A value contained in the query data filed is not an allowable value of the slave.
04	Slave Device Failure	An unrecoverable error occurred while the slave was attempting to perform the requested action.
05	Acknowledge	The slave has accepted a request and is processing it, but a long duration of time is required.
06	Slave Device Busy	The slave is processing a long-duration program command.
08	Memory Parity Error	The slave attempted to read extended memory, but detected a parity error in the memory. Service may be required on the slave.

Error Handling

Errors can be divided up into two general sources. Either:

1. an error in transmission or
2. user tries to do something that is not a valid action

In the first case, the SF500 will not respond and let the master wait for a ‘response time out’ error, which will cause the master to re-send the message.

In the second case, it depends on what the user tries to do. Listed below are various actions and what the expected outcome is. In general, SF500 will not give an error to the user request.

- If the user reads an invalid parameter, the user will get a number back.
- If the user writes an invalid parameter (a non-existing parameter or a read only parameter), the value will be ignored and no error response will be made. However, the current value will not reflect the desired new value.
- If the user writes a read only register, then the value will be ignored and no error response will be made. However, the current value will not reflect the desired new value.
- If the user attempts to write one or more registers that are out of range, an exception response code 2 will be generated.
- If using an unsupported function code, undocumented results may occur. The user is encouraged not to do this.

Parameter assignment 11

f indicates factory set value

P000 Security Lock

Locks out the program editor so that parameter values for P001 through P999 cannot be changed. This however does not prevent the access to the parameters for viewing.

Programming is locked out if the value of P000 is other than 1954.

Entry:

1954 = unlocked[f]

1954 = locked

11.1 Start Up (P001 to P017)

This is the minimum parameter programming required before attempting a calibration and successful entry into the **RUN** mode.

11.1.1 P001 Language

Selects the language for communication with the SF500.

Entry:

1 = English[f]	5 = Italian
2 = French	6 = Portuguese
3 = German	7 = Russian
4 = Spanish	

11.1.2 P002 Test Reference Selection

Selects the type of test reference used to represent a material rate: weight or electronic.

weight:	the weight that is supplied specific to the flowmeter
electronic:	calibration based on automatic calculation of the mV span from the load cells or LVDT

Entry:

1 = weight[f]

3 = ECal

11.1.3 P003 Number of Load Cells

Siemens flowmeters are available in models of one or two load cell design. Select the number of load cells corresponding to the flowmeter connected.

If using the optional remote LVDT conditioner card, for LVDT flowmeters, select the "1" value.

Entry:

Enter the number of load cells: 1[f] or 2.

11.1.4 P004 Rate Measurement System

Selects system of measurement used, either imperial or metric.

Entry:

1 = imperial

2 = metric[f]

11.1.5 P005 Design Rate Units

Determines the units for programming and measurement.

	imperial - P004 = 1		**metric - P004 = 2**
entry:	1[f] =	T/h (tons/hour)	t/h (tonnes/hour)
	2 =	LT/h (long tons/hour)	kg/h (kilograms/hour)
	3 =	lb/h (pounds/hour)	kg/min (kilo-grams/minute)
	4 =	lb/min (pounds/minute)	

Changing this parameter does not affect the rate parameter (P011). This parameter should be re-entered for conformity in units.

t =1000 kg

LT=2240 lb.

T=2000 lb.

11.1.6 P008 Date

Enter the current date in *yyyy-mm-dd* format.

Where:

yyyy = year

mm = month, 01 –12

dd = day, 01 – 31

e.g. 1999-03-19 (March 19, 1999)

11.1.7 P009 Time

Enter the current time in *hh-mm-ss*, 24 hour format.

Where:

hh = hour

mm = minute

ss = second

11.1.8 P011 Design Rate

Specifies the design rate of material flow for the flowmeter. (*f* = 0.00)

Enter the design rate in the units selected (P005).

11.1.9 P017 Test Rate

Specifies the rate referenced when performing a span. (*f* = 0.00)

Enter the test rate value as calculated from the corresponding solids flowmeter instruction manual.

11.1.10 P019 Manual Span Adjust

Provides a means for adjustment to the span calibration (*f* = 0)

The adjustment value is determined by performing material tests and is subsequently entered either as a calculation of % change into P598, or as the weight of the material test.

Entry:

1 = % change

2 = material test

Refer to Recalibration (Page 50).

11.1.11 P080 Display Damping

Sets the speed at which the displayed rate readings and outputs (alarm and mA) react to the change. Refer to Operation (Page 72).

Note

The effect of damping (P080–01) on mA output can be overridden by mA output damping (P220).

The higher the damping value, the slower the response.

Enter damping value, range 0.000[f] – 999.

11.1.12 P081 Display Scroll Mode

The **RUN** displays are scrolled either manually by pressing ALT DISP if the scroll mode is set to OFF, or automatically if the mode is set to ON.

Entry:

0[f] = OFF

1 = ON

11.2 Relay/Alarm Function (P100 – P117)

These parameters are specific to the use of the relay/alarm function. Refer to Operation (Page 72).

11.2.1 P100 Relay Function

Sets the relay function for the relay selected, relays 1 to 5 (P100 –01 to –05).

Note

- To reset the Diagnostics relay, the SF500 must be cycled between **PROGRAM** and **RUN** mode.
- To reset the Batch relays, the Batch totalizer must be reset.

Entry:

0 = OFF[f]

1 = rate

2 = diagnostic

3 = PID–01 setpoint deviation[1]

4 = PID–01 setpoint deviation[1]

5 = pre-warn[2]

6 = setpoint[2]

7 = online calibration[3]

[1.] Valid only if PID system (P400) is enabled.

[2.] Valid only if batch function (P560) is enabled.

[3.] Valid only if online calibration (P355) is enabled.

11.2.2 P101 High Alarm / Deviation Alarm

High Alarm (f = 100)

For relay functions P100 = 1; this parameter sets the high alarm setpoint for the relay selected, relays 1 to 5 (P100 –01 to –05).

Enter the value in % of full scale.

Deviation Alarm (f = 10)

For relay functions, P100 =3 and 4, this parameter sets the deviation setpoint for the relay selected, relays 1 to 5 (P100 –01 to –05).

Enter the value in % of setpoint.

11.2.3 P102 Low Alarm

Sets the low alarm setpoint for relay selected, relays 1 to 5 (P100 – 01 to – 05). (*f* =20)

Enter the value in % of full scale.

Note

Not applicable if P100 = 2, 3, 4, 5, 6 or 7.

11.2.4 P107 Relay Alarms

Sets the alarm mode for the relay selected, relays 1 to 5 (P100 – 01 to – 05).

Entry:

1 = high and low[f]

2 = high only

3 = low only

Note

Not applicable if P100 = 2, 3, 4, 5, 6 or 7.

11.2.5 P117 Relay Dead Band

Sets the dead band for the relay selected, relays 1 to 5 (P100 – 01 to – 05). The dead band prevents relay chatter due to fluctuations at the high or low setpoint. (*f* =3.0)

Enter the value in % of full scale, or for deviation alarm enter % of setpoint.

Note

Not applicable if P100 = 2, 5 or 6.

11.2.6 P118 Relay Logic

Sets the logic applied to relays to determine their open or closed state.

Power Failure

The relays on the SF500 default to normally open under power loss.

Normal Operation

In software, all relays are programmed the same way; with **ON** setpoints always indicating relay action. This parameter allows the reversal of the operation. Normally, P118 = 2 for each relay.

Reverse Operation

When P118 = 3, the operation of the indexed relay is reverse from normal.

Values

P118	Logic	Relay
2	positive logic	normally closed[f]
3	negative logic	normally open

11.2.7 P119 Relay Override

This function allows the user to simulate an alarm condition: ON or OFF, which will override normal operation until P119 setting is returned to normal.

Values

P119	Condition	Display (alarm field)
0	normal	normal
1	alarm on	ALM #
2	alarm off	blank

11.3 mA I/O Parameters (P200 - P220)

These parameters are specific to the use of the mA output. Refer to mA Output (Page 73)for details.

- mA output 1 is physically located at terminals 21/22 on the main board.
- mA outputs 2 and 3, and inputs 1 and 2 are physically located on the optional mA I/O board which is mounted onto the main board.

In the case of assigning mA input and output functions to PID control, the following correlation exists:

	mA input	mA output
PID control 1	1	2
PID control 2	2	3

11.3.1 P200 mA Output Range

Sets the mA range for the output selected, outputs 1 to 3 (P200 – 01 to – 03).

Entry:

1 = 0 – 20 mA

2 = 4 – 20 mA[f]

11.3.2 P201 mA Output Function

Assigns the mA output function for the output selected, outputs 1 to 3 (P201 - 01 to - 03).

Entry:

1 = rate [f]

2 = PID control output[1)]

[1)] Valid for outputs 2 and 3, only if PID system (P400) is enabled.

11.3.3 P204 mA Output Average

Sets the averaging period, in seconds, for the rate output for output 1 only.

The instantaneous mA values are averaged for the set period, and then the average value is output during the next period while a new average is being calculated.

Entry:

0 = OFF [f]

1 – 999 = averaging period

11.3.4 P212 mA Output Minimum

Sets the minimum mA limit for the output selected, outputs 1 to 3 (P212 – 01 to – 03). The limit sets the lower mA range (0 or 4 mA) to a minimum output value. (*f* = 3.80)

Enter limit value, range 0 – 22

11.3.5 P213 mA Output Maximum

Sets the maximum mA limit for the output selected, outputs 1 to 3 (P213 – 01 to – 03). The limit sets the upper mA range (20 mA) to a maximum output value. (*f* = 22.00)

Enter limit value, range 0 – 22.

11.3.6 P214 4 mA Output Trim

Trims the 4 mA output level for the output selected, outputs 1 to 3 (P214 – 01 to – 03). The trim adjusts the output to agree with a milliammeter or other external mA input device.

Scroll the trim value up or down.

11.3.7 P215 20 mA Output Trim

Trims the 20 mA output level for the output selected, outputs 1 to 3 (P215 – 01 to – 03). The trim adjusts the output to agree with a milliammeter or other external mA input device.

Scroll the trim value up or down.

11.3.8 P220 mA Output Damping

Sets the damping for the output selected, outputs 1 to 3 (P220 – 01 to – 03). Damping sets the speed at which the mA output reacts to change. The greater the damping value, the slower the response. If the value is 0, the mA output assumes the damping set in P080. (*f* = 0.00)

Enter the damping value, range 0.001 – 999.

11.3.9 P250 mA Input Range

Sets the mA range for the input selected, inputs 1 to 2 (P250 - 01 to - 02).

Entry:

1 = 0 - 20 mA

2 = 4 - 20 mA [f]

11.3.10 P255 mA Input Function

Assigns the mA input function for the input selected, inputs 1 to 2 (P250 - 01 to - 02)

Entry:

0 = OFF [f]

1 = PID setpoint

2 = PID process variable

3 = Online calibration[1)]

4 = Moisture compensation

[1] Valid only if Online Calibration is turned on, (P355 = 1).

11.3.11 P261 4 mA Input Trim

Trims the 4 mA input level for the input selected, inputs 1 to 2 (P250 – 01 to – 02). The trim adjusts the input to agree with an external 4 mA source.

Follow the SF500 online instructions to trim the input.

11.3.12 P262 20 mA Input Trim

Trims the 20 mA input level for the input selected, inputs 1 to 2 (P250 – 01 to – 02). The trim adjusts the input to agree with an external 20 mA source.

Follow the SF500 online instructions to trim the input.

11.3.13 P270 Auxiliary Input Function

Selects the auxiliary input function for the input selected; inputs 1 to 5 (P270 - 01 to - 15).

Value	Function	Symbol	Description
0	OFF		
1	alternate display:		momentary closure of the input contact causes the **RUN** display to scroll to the next display.
2	reset totalizer 1:		momentary closure of the input contact resets the totalizer.
3	zero:		momentary closure of the input contact initiates a zero calibration.
4	span:		momentary closure of the input contact initiates a span calibration.
5	print:		momentary closure of the input contact sends a print request.
6	multispan selection:		maintained closure state of the input contact(s) (up to 3) selects the multispan (P365).
8	reset batch:		momentary closure of the input contact resets the batch totalizer to zero.
9	PID freeze:		*off* closure suspends PID function in the auto mode *freeze* function in the auto mode and holds output at last value.
10	PID setpoint source:		remote local

Value	Function	Symbol	Description
11	PID mode:		auto manual
12	external alarm:		the input contacts status is sensed off.
13	remote communication write:		keypad / Dolphin Plus write (program) enabled SmartLinx® / remote device write (program) enabled
14	initiate online calibration:		momentary closure of the input contact initiates online calibration.
15	accept new online calibration span:		momentary closure of the input contact accepts the online calibration deviation.

Note

Before you can use Online Calibration, P100, P255, P355, P356, and P357 must be set up.

Entry:

0 = OFF [f]

1 = alternate display

2 = reset totalizer 1

3 = zero

4 = span

5 = print

6 = multispan selection[1]

7 = reserved

8 = reset batch

9 = PID freeze

10 = PID setpoint source

11 = PID mode

12 = external alarm

13 = remote communication write

14 = Initiate Online Calibration

15 = Accept new online calibration span[2]

[1)] If the SF500 is programmed for multispan operation, the auxiliary input contact state determines the multispan number (equivalent to P365). Input 1 is reserved for multispan 1 and 2 selection. Input 2 is reserved for multispan 3 and 4 selection. Input 3 is reserved for 5 to 8 selection.

[2)] Enter 1 (existing – ALT_DSP) to reject the new online calibration span.

multispan selection	Auxiliary Input	auxiliary input 2	auxiliary input 3
1	⊣⊢	⊣⊢	⊣⊢
2	⊣⊸	⊣⊢	⊣⊢
3	⊣⊢	⊣⊸	⊣⊢
4	⊣⊸	⊣⊸	⊣⊢
5	⊣⊢	⊣⊢	⊣⊸
6	⊣⊸	⊣⊢	⊣⊸
7	⊣⊢	⊣⊸	⊣⊸
8	⊣⊸	⊣⊸	⊣⊸

If an attempt is made to select a multispan that has not been zero and span calibrated, the selection request is ignored.

Note

- When performing a remote span, it will first perform a zero, then it will ask you to set up span test. Once loading is within ± 2% of the design test weight, it will perform the span.
- For the print command to work, the SF500 must be in **RUN** mode.

11.4 Calibration Parameters (P295 - P360)

11.4.1 P295 Load Cell Balancing

Initiates an electronic balancing of the load cell input signals. Balancing is required for flowmeter models of two load cell design.

Refer to Start Up (Page 31)for requirements and execution.

11.4.2 P341 Days Of Service

The cumulative days that the application device has been in service. The time is recorded once daily in a non-resettable counter. Periods of less than 24 hours are not recorded, nor accumulated. (*f* = 0)

11.4.3 P350 Calibration Security

Provides additional security to the global lock (P000).

		zero	Span	Reset T1
entry:	0 = no additional security [f].	Yes	Yes	Yes
	1 = in addition to P000 lock; no span.	Yes	No	Yes
	2 = in addition to P000; no zero, no span.	No	No	Yes
	3 = in addition to P000; no zero, no span, no totalizer 1 (T1) reset.	No	No	No

Note

If SW1 is set to the left position, it will only allow the Zero function.

11.5 Online Calibration Options (P355 to P358)

Note

Online calibration options must be enabled (P355 = 1) before they become available.

11.5.1 P355 Online Calibration Feature

Enables Online Calibration.

Entry:

0 = OFF [f]

1 = ON

11.5.2 P356 Online Calibration Reference Weight

Enter the weigh bin reference weight, (in units selected in P005), range 0.000 to 99999. (*f* = 0.000)

11.5.3 P357 Online Calibration Limits

Use to enter the weigh bin limit settings.

P357.1 MAX LIMIT, range 0.0 to 100.0 (*f* = 0%)

P357.2 HIGH LIMIT, range 0.0 to 100.0 (*f* = 0%)

P357.3 LOW LIMIT, range 0.0 to 100.0 (*f* = 0%)

11.5.4 P358 Online Calibration Activation

Initiates online calibration.

Entry:

0 = OFF [f]

1 = ON

11.5.5 P359 Factoring

Factoring is used as a method of calculating the value of the test rate (P017) to a new test reference. The task is performed only for the weight relevant for the multispan selected, if applicable.

Entry:

1 = weight (*f* = 1)

Refer to Recalibration (Page 45) for execution of the factoring procedure.

Note

Totalization is halted during the factoring procedure, and resumed only upon return to the **RUN** mode.

11.5.6 P360 Calibration Duration

Sets the number of whole calibration durations used during a zero or span calibration. (*f* = 1 which is approximately 20 seconds.)

Enter number of time periods, range 1 to – 99.

11.5.7 P365 Multispan

Select the span reference to be applied for determination of rate and totalization.

Entry:

1 = multispan 1 (MS1), for product or condition A [f]

2 = multispan 2 (MS2), for product or condition B

3 = multispan 3 (MS3), for product or condition C

4 = multispan 4 (MS4), for product or condition D

5 = multispan 5 (MS5), for product or condition E

6 = multispan 6 (MS6), for product or condition F

7 = multispan 7 (MS7), for product or condition G

8 = multispan 8 (MS8), for product or condition H

Refer to Multispan (Page 58) and P270 Auxiliary Input Function (6) (Page 130).

11.5.8 P367 Direct Zero Entry

Directly enters the zero reference count.

Direct entry is intended for use when replacing software or hardware and it is not convenient to perform an initial zero at that time. (*f* = 0)

Refer to Recalibration (Page 45) for execution.

11.5.9 P368 Direct Span Entry

Directly enters the span reference count for the span selected, span 1 to 8 (P368 – 01 to – 08).

Direct entry is intended for use when replacing software or hardware and it is not convenient to perform an initial zero at that time. (*f* = 0)

Refer to Recalibration (Page 45) for execution.

11.5.10 P370 Zero Limit Deviation %

Sets the zero calibration deviation limit ± from the last initial zero. If the accumulated deviation of successive zero calibrations exceeds the limit, the zero calibration is aborted. (*f* = 12.5)

Enter the maximum allowable % deviation, range is 1 to 12.5 %.

11.5.11 P377 Initial Zero

Resets the initial zero.

The initial zero is the reference zero to which all subsequent operator initiated zero calibrations are compared in determining whether they have deviated beyond the zero limit (P370). (*f* = 1)

Note

Refer to Initial Zero (Page 52) for execution.

11.5.12 P388 Initial Span

Resets the initial span for the span selected, multispan 1 to 8 (P388 – 01 to – 08).

The initial span is the reference to which all subsequent span calibrations are compared in determining whether they have deviated beyond an accumulated ± 12.5% of the initial span. (*f* = 1)

Note

Refer to Initial Span (Page 56)for execution.

11.6 Linearization Parameters (P390 – P392)

These parameters are used to compensate for non-linear response of the weighing system to the SF500. Refer to Linearization (Page 69) for execution, an example on the use of these parameters.

Note

In the case of multispan operation, the linearizer is applied to all spans.

11.6.1 P390 Linearizer

Enables or disables the linearization function.

Entry:

0 = OFF [f]

1 = ON

11.6.2 P391 Linearizer Rate Points

Enters the rate values, in units of P017, for the point selected, points 1 to 5 (P391 – 01 to – 05). (*f* = 0.00) Maximum value is 150 %.

11.6.3 P392 Linearizer Compensation %

Enters the compensation value, in percent, for the point selected, point 1 to 5 (P392 – 01 to – 05). Range is –150 to 150 %. (*f* = 0.00)

11.6.4 P398–01 Moisture Content

Factors out moisture component of rate and total for all multispans selected. The factored values are meant to report the dry mean values of the material being conveyed. (*f* = 0.00)

Enter the moisture content in % weight or mA Input Value.

11.6.5 P398–02 Moisture Content

Allows moisture content P398–01 to be scaled to maximum value.

Enter the moisture content in % rate (maximum value 20 mA).

11.7 Proportional Integral Derivative (PID) Control

Parameters (P400 – P419)

Note

- Changes to P401, P402, and P414 are not immediately effected while in auto mode. Change should be made in the manual mode and are effected upon return to the auto mode.
- The PID function does not control during any of the calibration functions (e.g. zero, span, factor, material test).

11.7.1 P400 PID System

Enables the selected PID system, systems 1 or 2 (P400 – 01 or – 02).

Entry:

0 = OFF [f]

1 = manual

2 = auto

11.7.2 P401 PID Update Time

Sets the update time (P401 – 01 or – 02) for the corresponding PID system (1 or 2).

Normally the controller is updated each time the process value is updated (every 300 ms). However in unstable or slow reacting systems the controller update can be programmed to update on a multiple of the process value update. A high value can introduce instability. (*f* = 1)

Entry:

1 = 300 ms

2 = 600 ms

3 = 900 ms

etc.

11.7.3 P402 PID Process Value Source

Determines the source of the process value (P402 – 01 or – 02) for the corresponding PID system (1 or 2).

The process value is the value that the controller is trying to match with the setpoint. (*f* = 1).

Enter:

1 = rate [f]

2 = mA input 1

3 = mA input 2

11.7.4 P405 Proportional Term

Sets the proportional term (P405 – 01 or – 02) for the corresponding PID system (1 or 2) (*f* = 0.400).

The proportional term is the proportional gain. A gain of 1 is equivalent to a proportional band of 100%.

The proportional band is the range of deviation from the setpoint that corresponds to the full range or the control output.

Enter the proportional term 0.000 to 2.000.

11.7.5 P406 Integral Term

Sets the integral term (P406 – 01 or – 02) for the corresponding PID system (1 or 2) (*f* = 0.200).

Enter the integral term 0.000 to 2.000.

11.7.6 P407 Derivative Term

Sets the derivative term (P407 – 01 or – 02) for the corresponding PID system (1 or 2) (*f* = 0.050).

Enter the derivative term 0.000 to 1.000.

11.7.7 P408 Feed Forward Term

Sets the feed forward term (P408 – 01 or – 02) for the corresponding PID system (1 or 2) (*f* = 0.300).

Enter the feed forward term 0.000 to 1.000.

11.7.8 P410 Manual Mode Output

Displays the percentage output value (P410 – 01 or – 02) for the corresponding PID system (1 or 2).

When the PID system is in manual, this is the value output, providing bumpless transfer when switching from manual to auto. When switching from auto to manual, this parameter is loaded with the current controlled value.

11.7.9 P414 Setpoint Configuration

Configures the setpoint (P414 – 01 or – 02) for the corresponding PID system (1 or 2).

Determines the source for the PID's setpoint. If local, the setpoint value is entered into P415. The setpoint can be set from the mA input 1 or 2. The mA value is scaled to the full scale value of the process value (P402).

Entry:

0 = local [f]

1 = mA input 1[1]

2 = mA input 2[1]

3 = % rate[2]

[1)] For PID–01, the setpoint source is mA input 1; for PID–02, the setpoint source is mA input 2.

[2)] Option 3 is only available if P402 has been set for an external process value source. The setpoint will be the current rate value displayed as a percentage.

11.7.10 P415 Local Set Point Value

Sets the local set point (P415 – 01 or – 02), in engineering units, for the corresponding PID system (1 or 2) when in auto mode. For the external process variable, the set point is shown in %. (*f* = 0.000)

Note

The PID setpoint can be modified while in **RUN** mode using the up/down arrow keys.

11.7.11 P416 External Setpoint

Displays the external setpoint (P416 – 01 or – 02), in engineering units, for the corresponding PID system (1 or 2). For the external process variable, the setpoint is shown in %.

If the setpoint is external (P414 = 1 or 2), then this parameter displays the setpoint value that is being input, either mA input 1 or 2.

11.7.12 P418 Remote Setpoint Ratio

Sets the remote setpoint ratio (P418 – 01 or – 02) for the corresponding PID system (1 or 2) when P414 = 1 or 2 (*f* = 100).

The remote setpoint ratio scales remote setpoint input by the set percentage. A value of 100 means that the setpoint is 100% of the mA input.

11.8 Batch Control (P560 – P568)

The following parameters are specific to the use of the SF500 as a batch controller. P564 – P568 is accessible only when Count Up (1) is selected.

11.8.1 P560 Batch Mode Control

Enables the batch control function. Batch control is count up.

Entry:

0 = OFF[f]

1 = count up

11.8.2 P564 Batch Setpoint

Sets the batch total. When the amount of material delivered reaches this point, the batch relay contact opens (P100) to signal the end of the batch. (*f* = 0.000)

Enter the setpoint of the units of weight selected (P005).

Note

The batch setpoint can be modified while in **RUN** mode using the up/down arrow keys.

11.8.3 P566 Batch Pre-Warn

Enables or disables the pre-warn function associated with batch control, warning that the batch is nearing completion.

Entry:

0 =OFF[f]

1 = ON

11.8.4 P567 Batch Pre-Warn Setpoint

Sets the setpoint for the pre-warn function (P566). When the batch reaches the setpoint, the relay contact associated with the pre-warn function (P100) closes. (*f* = 0.000)

Enter setpoint in units of weight selected (P005).

11.8.5 P568 Batch Pre-Act

Acts on the batch operation such that when the batch totalizer is reset, the batch total is compared to the setpoint (P564). The difference is then applied to pre-act on the setpoint for the next batch in order to improve the accuracy of the batch. The activity is internally limited to ± 10% of the batch setpoint.

Entry:

0 = OFF[f]

1 = Auto

2 = Manual

For example, for Auto Batch Pre-Act

	1st batch	2nd batch	3rd batch
setpoint	1000	1000	1000
pre-act	1000	950	960
total	1050	990	1000

11.8.6 P569 Manual Batch Pre-Act Amount

Enter a value to make the setpoint relay change state at a known value lower than the setpoint (P564). This allows the feeding system to empty with each batch. The value of the manual pre-Act entry is generally reflective of the material that is left in the feeding system.

Example:

Setpoint = 1000

Manual Pre-Act = 50

The setpoint relay will activate when the batch totalizer reaches 950.

11.8.7 P598 Span Adjust Percentage

Accessible only through manual span adjust (P019), when percent change (1) is selected.

Refer to % Change (Page 45).

11.9 Totalization (P619 – P648)

The following parameters are specific to the use of the SF500 totalizers. Refer also to Operation / Totalization (Page 74).

11.9.1 P619 Totalling Dropout

Sets the limit, in percent of design rate, below which material rates are not totalized. (*f* = 3.0)

The value of **0** is reserved to allow both negative and positive totalization. Enter drop out value in % of design rate; range is 0 to 25 %.

11.9.2 P620 Display Zero Dropout

Activates the limit as defined in P619 'Totalling Dropout', below which, the rate is set to 0.0.

11.9.3 P621 mA Zero Dropout

Activates the limit as defined in P619 'Totalling Dropout', below which, the analog output, with respect to rate, is set to 0.0.

Note

Valid only if P201 = 1 or 2

11.9.4 P631 Totalizer Resolution

This parameter sets the resolution of the totalizer selected.

Totalizers are:

-01, totalizer 1

-02, totalizer 2

-03, verification totalizer

-04, material test totalizer

-05, batch totalizer

Entry:

1 = 0.001 (one thousandth)

2 = 0.01 (one hundredth)

3 = 0.1 (one tenth)

4 = 1 (unit)[f]

5 = 10 (x ten)

6 = 100 (x hundred)

7 = 1000 (x thousand)

11.9.5 P634 Communication Totalizer Resolution

Used to set the number of fixed decimal places for Total 1 and Total 2 for SmartLinx communication.

Entry:

P634 Index	Description	Value	# of decimal places
Primary Index 1	Total 1 for SmartLinx communication	3[f]	3
		2	2
		1	1
		0	0
Primary Index 2	Total 2 for SmartLinx communication	3[f]	3
		2	2
		1	1
		0	0

With 3 decimal places set, the largest readable value is 2,147,483.638. With 2 decimal places set, the largest readable value is 21,474, 836.38. With 1 or 0 decimal places set, the largest readable value is 100,000,000.

Note

This parameter is only relevant if viewing the totalizer value using remote communications, such as SmartLinx or Modbus.

11.9.6 P635 Verification Totalizer

Enables a dedicated internal totalizer that totals the amount of material conveyed during a zero or span verification. It is used to verify the accuracy of the scale.

If a printer is connected to a port and the required programming is in order, a printout of the activity is automatically done on completion of the verification process.

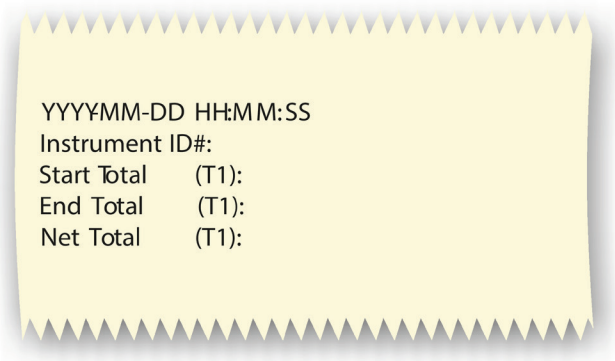

Entry:

0 = OFF, verification totalizer disabled [f]

1 = do not total, verification totalizer is enabled, but main totalizers[1] are disabled

2 = add total, verification totalizer is enabled as well as main totalizers[1]

[1] Main totalizers consist of internal totalizers 1 and 2, and external totalizers 1 and 2.

11.9.7 P638 External Totalizer Resolution

Note

- If the resolution selected would cause the totalizer to lag behind the count at 100% of design rate, the next possible resolution is automatically entered.
- External Totalizer output frequency must not exceed 13.33 Hz at 150% of design rate.

This parameter sets the resolution of the selected external totalizer.

Totalizers are:

P638-01, external totalizer 1 (T1), terminals 52/53

P638-02, external totalizer 2 (T2), terminals 55/56

Entry:

1 = 0.001 (one thousandth)

2 = 0.01 (one hundredth)

3 = 0.1 (one tenth)

4 = 1 (unit) [f]

5 = 10 (x ten)

6 = 100 (x hundred)

7 = 1000 (x thousand)

11.9.8 P643 External Contact Closure

Sets the duration of the contact closure, in ms, for the external totalizer selected, totalizers 1 and 2 (P643-01 or -02) (*f* = 30).

Permissible values are in 10 ms increments from 0 to 300 ms. The value is automatically calculated upon entry of P011 (design rate) and P638 (totalizer 1 resolution, external) so that the duration of contact closure allows the transistor switch response to track the total, up to 150% of the design rate. The value can be changed to suit specific contact closure requirements, such as in the case of programmable logic controllers.

Note

- If the duration selected causes the totalizer to lag behind the count rate, the next possible duration is automatically entered.
- External Totalizer output frequency must not exceed 13.33 Hz at 150% of design rate.

11.9.9 P647 Totalizer Display

Selects the totalizer combination to be displayed, either manually through the scroll display key or automatically by control of the display mode (P081).

Entry:

1 = totalizer 1[f]

2 = totalizer 2

3 = totalizer 1 and 2

11.9.10 P648 Totalizer Reset, Internal

Manual reset of the selected internal totalizer when the entry is made (*f* = 0).

Entry:

0 = no reset

1 = reset totalizer 2

2 = reset totalizers 1 and 2

Resetting the internal totalizers 1 and 2 resets the internal registers for external totalizers 1 and 2.

11.9.11 P699 ECal mV Span

This parameter becomes available when Ecal is selected in P002.

Enter the mV span corresponding to 0 to 100% full scale rate. The display changes to P017 to show the design rate value as the test rate.

11.9.12 P735 Back Light

Sets the intensity of the back light for the LCD. (*f* = 10)

Entry:

0 = OFF

1 to 10 = low to high

11.9.13 P739 Time Zone

The offset from Greenwich mean time (GMT) of local time.

This parameter does not affect any timed events because all times are local. It can be accessed by a remote computer for synchronization purposes.

Enter local time zone –12 to 12.

11.10 Communication (P750 – P799)

Note

Changes to these parameters are not effected until the power to the unit is turned off and then back on.

These parameters cover the various communications formats supported by the SF500: serial printer, Dolphin Plus, SmartLinx®, and Modbus.

11.10.1 P742 Word Order Parameter

Note

This parameter affects SmartLinx and Modbus communications

This value determines the format of all unsigned, double-register integers (UINT32), *except for those in the direct parameter access*.

Values	Description
0[f]	most significant byte (MSB) is given first
1	least significant byte (LSB) is given first

11.10.2 P750 – P769 SmartLinx® Module Specific Parameters

These parameters are specific to the SmartLinx module installed. Refer to the module documentation for a list and description of the specific parameter requirements.

11.10.3 P770 – P789 Local Port Parameters

These parameters are specific to programming of the SF500 communication ports. Refer to Communications (Page 97) for a listing and description of these parameters.

11.10.4 SmartLinx® Hardware Testing

These parameters are used to test and debug a SmartLinx card (if installed).

11.10.5 P790 Hardware Error

Displays the results of ongoing hardware tests in the communications circuitry.

Values	Description
PASS[f]	No errors
FAIL	Error occurred communicating with card; device will try to reinitialize communications with card. If message continues, record values in P791 and P792 and contact your local Siemens representative.
ERR1	No module installed, or module not supported; SmartLinx communications have been disabled.

If **FAIL** or **ERR1** is displayed in P790 (Hardware Error), go to P791 (Hardware Error Code) and P792 (Hardware Error Count) for information about the error.

11.10.6 P791 Hardware Error Code

Indicates the precise cause of **Fail** or **ERR1** condition from P790.

Values	Description
0[f]	No errors
Any other value	Error code; provide this code to your Siemens representative for troubleshooting

11.10.7 P792 Hardware Error Count

A count that increments by **1** each time **Fail** is reported in P790 (Hardware Error).

Values	Description
Range: 0 to 9999	Error count; provide this number to your Siemens representative for troubleshooting.

11.10.8 P794 SmartLinx Module Type

This parameter is used to identify the module type when SmartLinx is used. If you are not using SmartLinx, this parameter is not functional. Please see the associated SmartLinx instruction manual for a full description of this parameter.

11.10.9 P795 SmartLinx Protocol

This parameter is used to identify the protocol when SmartLinx is used. If you are not using SmartLinx, this parameter is not functional. Please see the associated SmartLinx manual for a full description of this parameter.

If a SmartLinx module is not configured, P795 will have a value of either 255 or 0.

11.10.10 P799 Communications Control

Assigns programming control through the local keypad (or Dolphin Plus, P770 = 1), or through a Modbus protocol (P770 = 2 or 3).

Entry:

0 = local

1 = modbus

11.11 Test and Diagnostic (P900 – P951)

Note

These parameters are used for test and diagnostic purposes.

11.11.1 P900 Software Revision

Displays the EPROM (Flash ROM) software revision level.

11.11.2 P901 Memory Test

Tests the memory. Test is initiated by scrolling to the parameter or repeated by 'pressing enter'

Display:

PASS = normal

FAIL = consult Siemens

11.11.3 P911 mA Output Test

Tests the mA output value for the output selected, outputs 1 to 3 (P911 – 01 to – 03).

Displays the value from the previous measurement. Enter a test value and the displayed value is transmitted to the output. Upon returning to the **RUN** mode, the parameter assumes the actual mA output level. (*f* = 0)

Use the **UP** 4 and **DOWN** 8 arrow to scroll the value

Note

Integrator must be programmed and zero and span calibrations must be completed and accepted for the mA output test to initiate.

11.11.4 P914 mA Input Value

Displays the current mA input value for the input selected, inputs 1 to 2 (P914 – 01 to – 02).

Note

Not applicable if mA I/O board is not connected.

11.11.5 P931 Running Totalizer

1 = Total 1

2 = Total 2

3 = Verification Total

4 = Material Test Rate

5 = Batch Total

6 = NTEP Total

7 = 0Cal Start Total

8 = 0Cal End Total

11.11.6 P940 Load Cell mV Signal Test

Displays the raw (unbalanced) mV signal input for the selected load cell, load cells A to B (P940 – 01 to – 02).

Range 0.00 – 50.0 mV.

11.11.7 P943 Load Cell A/D Reference

Displays the A/D reference value for the selected load cells. These values are affected by load cell balancing (P295).

Load cells are:

– 01 = A and B

– 02 = A

– 03 = B

Note

When using an LVDT it is displayed as input A.

11.11.8 P948 Error Log

Displays a log of the last 25 error or alarm events (P948 – 01 to – 25) that have occurred. Event 01 is the current error.

Display:

0 = no error

= error code; refer to Troubleshooting (Page 152)

11.11.9 P950 Zero Register

Registers the number of zero calibrations that have been completed since the last master reset (*f* = 0).

11.11.10 P951 Span Register

Registers the number of span calibrations for the span selected, span 1 to 8 (P951 – 01 to – 08), that have been completed since the last master reset (*f* = 0).

11.11.11 P999 Master Reset

Resets parameters and totalizers to their factory setting (*f* = 0).

Enter **9** to execute the reset.

Diagnostics and troubleshooting 12

12.1 Generally

1. First check to see that:
   - There is power at the unit
   - The LCD is showing something
   - The device can be programmed using the fixed keypad.
2. Then, check the wiring pin outs and verify that the connection is correct.
3. Next, go over setup parameters P770 to P779 and verify that these values match the settings in the computer that you are using to communicate with it.
4. Finally, you should check the port that you are using on the computer. Sometimes trying a different Modbus driver will solve the problem. An easy stand-alone driver called ModScan32, is available from Win-Tech at www.win-tech.com (www.win-tech.com). We have found that this driver is very useful to test communications.

12.2 Specifically

Q1: I tried to set a Siemens device parameter, but the parameter remains unchanged.

A1:

a. Try setting the parameter from the keypad. If it can't be set using the keypad, check the lock parameter (P000) and

b. Check to ensure that SW1 (security switch) is not in the left position.

Error Codes

Error Code	![1]	Code Name	Message/Action
201		Error - Load Cell A & B	Reading between A & B > 20000, or no signal. Check wiring.
203	✓	Err: 203	Memory failure test. Consult Siemens.
210	✓	Remote Totalizer 1 exceeded	Increase resolution.
211	✓	Remote Totalizer 2 exceeded	Increase resolution.
213	✓	Maximum rate exceed-ed	Rate is > 3 times the design rate. If no me-chanical cause, check if re-rating the design rate required.

Error Code	!1	Code Name	Message/Action
220		Span too low	The span is based on the Design Load (P952). Ensure that the mV value representing the design load is greater than 1 mV. Typically the Test Load (P017) value is less than the value in P952; if it is greater than P952 check that the values entered in START UP parameters (P001 to P017) are entered correctly. Ensure proper test weight or chain is applied during span calibration.
221		Span out of range	Span deviation > 12.5%. Consider an initial span (P388). Refer to Initial Span (Page 56).
222	✓	Zero out of range	Zero deviation > minimum limit. Consider an initial zero (P377). Refer to Initial Zero (Page 52).
223		Security Violation	An attempt to run command / calibration that is not allowed under current security level.
224		Function not permitted	Function not allowed under current security level.
225		BF	Flashes in the bottom right corner of display when battery charge is too low.
227	✓	Err: 227	No process data available. Consult Siemens.
228		Batch pre-act adjustment > 10%	Pre-act adjustment is ignored. Tune process to limit batch error.
240		Integrator not configured	P002-P017 must be programmed.
241	✓	No PID mA Input	PID Process Value Source (P402) or PID Setpoint (P414) has been programmed for mA Input, however mA Input Function (P255) has not been programmed properly.
242	✓	No PID mA Output	PID System (P400) has been turned on, but mA Output (P201) has not been programmed properly.

Error Code	![1]	Code Name	Message/Action
243		No batch setpoint relay	Batch has been set up, but no relay has been configured for a set-point.
PF		Power Failure	Displayed at the bottom right corner of the display if power is interrupted after the integrator has been calibrated.

Technical specifications

13

Specification		
Power		
	• AC version	100 - 240 V AC +/- 10%, 50/60 Hz, 55 VA max. Fuse FU3 = 2AG, 2AMP, 250V Slo Blo
	• DC version	10 - 30 V DC, 26 W max. Fuse FU2 = 3.75A Resettable (not user replaceable)
Application		
		• Compatible with Siemens solids flowmeters or equivalent 1 or 2 load cell flowmeters • Compatible with LVDT equipped solids flowmeters, with use of optional interface board
Accuracy		0.1 % of full scale
Resolution		0.02 % of full scale
Environmental		
	• Location	Indoor/outdoor
	• Altitude	2000 m max.
	• Ambient temperature	-20 to 50 °C (-5 to 122 °F)
	• Relative humidity	Suitable for outdoor (Type 4X / NEMA 4X / IP65 enclosure)
	• Installation category	II
	• Pollution degree	4
Enclosure		
	• Type	Type 4X / NEMA 4X / IP65
	• Dimensions	285 mm W x 209 mm H x 92 mm D (11.2" W x 8.2" H x 3.6" D)
	• Material	Polycarbonate
Programming		Via local keypad and/or Dolphin Plus interface
Display		Illuminated 5 x 7 dot matrix liquid crystal display with 2 lines of 40 characters each
Memory		• Program and parameters stored in non-volatile FLASH ROM, upgradable via Dolphin Plus interface • Runtime totalizers and clock settings stored in battery backed RAM, battery P/N BR2330 or use equivalent 3V Lithium battery, 5 year life

Inputs	
Load cell/LVDT Card	0 - 45 mV DC per load cell/LVDT Conditioning Card
Auto zero	Dry contact from external device
mA	See optional mA I/O board
Auxiliary	5 discrete inputs for external contacts (Low = 0 V, High = 10 - 24 V), each programmable for either display scrolling, totalizer 1 reset, zero, span, multispan, print, batch reset, or PID function.

Outputs	
mA	• 1 programmable 0/4 - 20 mA[1)], for rate, for rate output • Optically isolated • 0.1 % of 20 mA resolution • 750 Ω load max • See optional mA I/O board
Load cell/LVDT Card	10 V DC compensated excitation for LVDT Conditioning Card or strain gauge type load cells, 2 cells max, 150 mA max
Remote totalizer 1	• Contact closure 10 - 300 ms duration • Solid state relay contact rated 30 V DC, 100 mA max. • Max. contact on-resistance = 36 Ω • Max. off-state leakage = 1 uA
Remote totalizer 2	• Contact closure 10 - 300 ms duration • Solid state relay contact rated 240 V AC/DC, 100 mA max. • Max. contact on-resistance = 36 Ω • Max. off-state leakage = 1 uA
Relay output	5 alarm/control relays, 1 form 'A' SPST relay contact per relay, rated 5 A at 250 V AC, non-inductive

1) Device will output a high current reading upon applying and removing power.

Communications	
Two RS232 ports	
One RS485 port (isolated)	
SmartLinx® compatible (see Options below)	

Cable		
One load cell/LVDT		
	• Non-sensing	Belden 8404, 4 wire shielded, 20 AWG or equivalent, 150 m (500 ft.) max.
	• Sensing	Belden 9260, 6 wire shielded, 20 AWG or equivalent, 300 m (1000 ft.) max.
Two load cells		
	• Non-sensing	Belden 9260, 6 wire shielded, 20 AWG or equivalent 150 m (500 ft.) max.
	• Sensing	Belden 8418, 8 wire shielded, 20 AWG or equivalent, 300 m (1000 ft.) max.
Auto zero		Belden 8760, 1 pair, twisted/shielded, 18 AWG, 300 m (1000 ft.) max.
Remote total		Belden 8760, 1 pair, twisted/shielded, 18 AWG, 300 m (1000 ft.) max.

Options		
	• Dolphin Plus	Siemens Windows® based software interface (refer to associated product documentation)
	• SmartLinx® Modules	Protocol specific modules for interface with popular industrial communications systems (refer to associated product documentation)
mA I/O board		
	• Inputs	• 2 programmable 0/4 - 20 mA for PID, control • Isolated • 0.1 % of 20 mA resolution • 200 Ω input impedance
	• Outputs	• 2 programmable 0/4 - 20 mA for PID control or rate • Isolated • 0.1% of 20 mA resolution • 750 Ω input impedance.
	• Output supply	Unregulated, isolated 24 V DC at 50 mA, short circuit protected
LVDT interface card		For interface with LVDT solids flowmeters (separately mounted)

Weight	2.6 kg (5.7 lbs.)
Approvals	CE[1)], CSA US/C, FM, RCM, GOST

1) EMC performance available upon request

Appendix A

A.1 Appendix I

A.1.1 Memory Backup

The SF500 requires no maintenance or cleaning, other than a periodic replacement of the memory backup battery. Refer to Installing/Replacing the Memory Backup Battery (Page 30).

A.1.2 Software Updates

Software updates require Siemens Dolphin Plus software, contact your local Siemens representative.

It is recommended that the old software and parameters be saved to your PC before downloading the new software.

Once installed, a master reset (P999) must be completed.

The parameters can then be reloaded, either manually or downloaded from the previously saved file. If downloading parameters via Dolphin Plus, confirm that SF500 is in **PROGRAM** mode. The zero and span values are included in the parameter file, However, new zero and span calibrations should be completed regardless, and as soon as possible to ensure operating accuracy.

A.1.3 Calibration Criteria

Zero

- no material flowing through the flowmeter. Run the flowmeter for several minutes to ensure that it is empty
- test weights are not used during a zero calibration
- moisture input not used during a zero calibration

Span

- a zero must be completed first
- flowmeter must be empty
- test weight must be applied

PID Systems

- zero and span criteria must be met
- set controller (P400) to manual and adjust the output for 100% material flow (using the 4 and 8 keys)
- shut off the prefeed to flowmeter. *In process where a prefeed device is included, it must be turned off to ensure that no material is fed into the flowmeter*.

A.2 Appendix II: Software Revision History

Software Revision	Date	Changes
2.00	April 30, 1999	• Original software release
2.01	July 20, 1999	• French language added • 38400 baud rate option removed • Span updated to reference current zero value • NTEP printout added • Totalizer rollover updated to 1,000,000 for all resolutions • Added units to verification totalizer printout • Error display updated to toggle between error and run mode
2.02	October 08, 1999	• Limited external contact closure to 300 msec • Added software filter to speed signal • Factoring now based on current zero value • Individual damping added for Rate, Load and Speed display • Parameters saved permanently in Flash • German added • Devicenet added • Display only the load cells selected

Software Revision	Date	Changes
2.03	May 16, 2000	• Allow proper startup if no RAM battery installed
2.04	June 30, 2000	• Larger flash added
2.05	February 07, 2001	• SmartLinx update time increased to 250 msec. • Batch totalizer was made accessible using Modbus • New real time clock added • SF500 calibrations no longer affected by time out • Auto Zero alarm relay will now reset toggling from program to run mode
2.06	February 17, 2001	• Updated calibration error so that it will not display a negative 0 error, -0.00%
3.00	April 27, 2001	• Added flowmeter option • Parameters are no longer changeable with remote communications when certification switch set
3.01	July 17, 2001	• Increased maximum idle time for SmartLinx to 9999 seconds • Fixed totalizer error when load is negative and totalizer drop out is 0.00 • Allowed access to P635 in certification mode • Setting of certification switch changes totalizer dropout to 0.00
3.02	August 07, 2001	• Fixed bug in totalizer P619 totalizer dropout

Software Revision	Date	Changes
3.03	February 20, 2002	• Fixed timing issue with interval printing • Added % rate and % load to PID setpoint configuration, P414 • Updated Auto Zero to allow run display to be seen, AZ now flashes in bottom right hand corner of display • Updated span adjust calculation • Increased totalizer resolution to 100,000,000 • Improved error interruption on display • Fixed zero and span calibration using remote communications
3.04	May 09, 2002	• Fixed SmartLinx error checking • Fixed error with discrete inputs • Added P419 PID freeze enable/disable • Updated zero calibration when certification switch set, now references last operator initiated zero prior certification switch set • Added power failure indicator on display, "PF" • On-line calibration added
3.05	November 11, 2002	• SmartLinx memory map increased • Improve external totalizer contact closure duration
3.06	July 23, 2003	• Updated PID control between remote/ local setpoint • Improve Dolphin Plus communications • Batch setpoint now adjustable in "RUN" mode • Slowed down the display when scroll key is held

Software Revision	Date	Changes
3.07		• Not released to production
3.08	March 1, 2006	• Remote zero and span calibrations fixed • Moisture meter added
3.09	August 8, 2006	• Remote totalizer exceeded error fixed • Totalizer dropout (P619) now limited to 3% or less when certification switch enabled
3.11	March 31, 2009	• Second speed sensor accuracy at frequencies below 10 Hz fixed • Parameter download using Dolphin Plus fixed (Dolphin Plus patch required) • Electronic load cell balancing of C&D fixed • Word order format with remote communication fixed • Integrator serial number added to printout • Power failure message added to printout
3.12	August 2009	• Fixed word order for SmartLinx

Software Revision	Date	Changes
3.13	December 2010	• Updated eCal and test load parameters • Added option 11 to P100 • Zero and Span show progress in % • Added display and mA dropout • Totalizer dropout (P619) now limited to 25% • Improve Modbus communication • Improve Diagnostic parameter • Remote span does not require zero prior to running • Online calibration now adjusts P017 value • New language options for print strings • Added load cell values to Modbus map • 3 decimal place resolution on batch totalizer added • Updated Display options for remote parameters changes
3.13.03	June 12, 2012	• Added Portuguese, Italian and Russian languages
3.13.04	Feb 26, 2013	• Added Smartlinx options, Profinet, Modbus TCP/IP, Ethernet/IP

Product documentation and support

B

B.1 Product documentation

Process instrumentation product documentation is available in the following formats:

- Certificates (http://www.siemens.com/processinstrumentation/certificates)
- Downloads (firmware, EDDs, software) (http://www.siemens.com/processinstrumentation/downloads)
- Catalog and catalog sheets (http://www.siemens.com/processinstrumentation/catalogs)
- Manuals (http://www.siemens.com/processinstrumentation/documentation)

  You have the option to show, open, save, or configure the manual.

  – "Display": Open the manual in HTML5 format
  – "Configure": Register and configure the documentation specific to your plant
  – "Download": Open or save the manual in PDF format
  – "Download as html5, only PC": Open or save the manual in the HTML5 view on your PC

You can also find manuals with the Mobile app at Industry Online Support (https://support.industry.siemens.com/cs/ww/en/sc/2067). Download the app to your mobile device and scan the device QR code.

Product documentation by serial number

Using the PIA Life Cycle Portal, you can access the serial number-specific product information including technical specifications, spare parts, calibration data, or factory certificates.

Entering a serial number

1. Open the PIA Life Cycle Portal (https://www.pia-portal.automation.siemens.com).
2. Select the desired language.
3. Enter the serial number of your device. The product documentation relevant for your device is displayed and can be downloaded.

To display factory certificates, if available, log in to the PIA Life Cycle Portal using your login or register.

Scanning a QR code

1. Scan the QR code on your device with a mobile device.
2. Click "PIA Portal".

To display factory certificates, if available, log in to the PIA Life Cycle Portal using your login or register.

B.2 Technical support

Technical support

If this documentation does not completely answer your technical questions, you can enter a Support Request (http://www.siemens.com/automation/support-request).

For help creating a support request, view this video here (www.siemens.com/opensr).

Additional information on our technical support can be found at Technical Support (http://www.siemens.com/automation/csi/service).

Service & support on the Internet

In addition to our technical support, Siemens offers comprehensive online services at Service & Support (http://www.siemens.com/automation/serviceandsupport).

Contact

If you have further questions about the device, contact your local Siemens representative at Personal Contact (http://www.automation.siemens.com/partner).

To find the contact for your product, go to "all products and branches" and select "Products & Services > Industrial automation > Process instrumentation".

Contact address for business unit:
Siemens AG
Digital Industries
Process Automation
Östliche Rheinbrückenstr. 50
76187 Karlsruhe, Germany

Glossary

Auto Zero

Allows a zero calibration to be performed automatically in **RUN** mode when the rate drops below 2% of design for 1 complete calibration period (P360).

Auxiliary Inputs

Can be programmed to allow the use of an external contact to provide the following functions, display scroll, totalizer 1 reset, Zero, Span, Multispan, Print, Batch reset, or PID functions.

Batching

The accumulation of a predetermined quantity of material.

Contacts

A junction of electrical conductors in open (not connected) or closed (connected) states.

Damping

Provides control over the speed at which the displayed rate readings and output functions are updated in response to changes in the internal rate signals.

Design Rate

This is the maximum material flow rate for this particular application (100% full scale).

Direct Span

If replacing software or hardware, this allows the entry of the previously recorded span value.

Direct Zero

If replacing software or hardware, this allows the entry of the previously recorded zero value.

Factoring

Used to calculate the test rate value of a new or unknown test weight using the current span as reference.

Initial Span

Usually the first span performed, it is used as reference for all other spans to determine whether they have deviated beyond the accumulated +/– 12.5%.

Initial Zero

Usually the first zero performed, it is used as reference for all other zeros to determine whether they have deviated beyond the Zero Limit (P370).

Input/Output Trim

Allows the 4 and 20 mA values to be adjusted and verified with an external source (meter).

Linearization

Compensates for non-linear output of the flowmeter caused by varying rates.

Load Cell

Strain Gauge type transducer that produces an electrical output proportional to force (load) applied.

LVDT

An electromechanical transducer that produces an electrical output proportional to the displacement of a separate movable core.

mA

A unit of measure for current flow, milliamperes.

Material Test

Material samples used to verify the accuracy of the span calibration.

Modbus

An industry standard protocol used by popular SCADA and HMI systems.

Moisture Sensor

A mA input function to incorporate moisture reading from an external moisture sensor.

Multispan

Since every material has its own unique physical properties, and may impact differently, a span calibration is required for each material to realize maximum accuracy.

PID

Proportional Integral Derivative control is used to control the feed rate to a setpoint, either internal to the SF500 or external.

RAM

Random Access Memory.

Random Access Memory

Memory that has both read and write capabilities.

Relay

An electromechanical device with contacts that can be closed or opened by energizing a coil.

Routine Span

Any operator initiated span calibration.

Routine Zero

Any operator initiated zero calibration.

Setpoint

A value that the integrator is trying to match.

SmartLinx

SPA

Single Parameter Access, used to view or edit parameters through the available communication ports.

Span

This is a count value representing the mV signal provided by either the LVDT or Load Cell at 100% design rate.

Span Register

This is the number of span calibrations that have been performed since the last master reset.

Test Weight

A calibrated weight which will represent a certain rate on the sensor.

Totalizer

An incremental counter that records the total of material that has been monitored.

Zero Register

Shows the number of zero calibrations that have been performed since the last master reset.

Index

A

alarm
  condition, 127
  display, 96
  event, 95
  high, 126
  mode, 126
Auto Zero, 53
Autobaud, 101
Auxiliary Input, 60, 61, 61
Auxiliary Input, 60, 61, 61
Auxiliary Input, 60, 61, 61

B

baud rate, 100, 118
bit values, 116

C

Cable, 157
calibration
  online, 64, 65, 157, 163
calibration
  initial, 52, 56, 57, 60
  online, 64, 65, 157, 163
calibration
  initial, 52, 56, 57, 60
calibration
  online, 64, 65, 157, 163
calibration
  online, 64, 65, 157, 163
Calibration
  online, 62
Catalog
  catalog sheets, 164
Certificates, 164
Command Controls, 113
communication
  configuration ports, 99
communications
  configuring ports, 99
  ports, 99
  protocol, 99, 100
Communications, 156
configuring communication ports, 99
Connections, 77
control
  feed forward, 85
  PID, 86, 127
  rate, 77
controller
  function, 89
  logic, 75, 145
  PID, 86
  setpoint, 77
Customer Support, (Refer to Technical support)

D

data
  advanced access, 110
  bits, 101
  types, 116
Date and Time, 112
Device Identifier, 110
Device State, 113
Diagnostic, 116
Direct span, 57
direct zero, 53
discrete
  input, 156
Dolphin
  Plus, 97, 99
Dolphin"
  protocol, 104
Downloads, 164

E

error
  codes, 112
  handling, 120
error"
  messages, 120
External Totalizer, 75

F

factoring, 67, 68
Format register, 110, 112
Format Register, 111

function, 156

H

Handshaking Area, 110
Hanging Up, 102
High Alarm, 126
Hotline, (Refer to Support request)

I

I/O board, 90
initial span, 56
initial startup, 86
initial zero, 52
Input, 156
Installation, 12, 16
installing or replacing the battery, 30

K

Key, 31

L

load cell, 155
LVDT, 155

M

mA, 90, 156
    I/O board, 77
    input, 90, 127
    output, 89, 127
Main entry, 120
Manuals, 164
Mapping, 110
maximum separation, 98
Modbus, 105
    protocol, 97, 105
    responses, 120
    RTU/ASCII protocol, 105
Modbus RTU Software, 118
modems
    available, 101
    hanging up, 102
    inactivity timeout, 102
    setting up, 118
    setup, 118
modes
    run mode, 45
mounting
    wall mount, 16
Mounting the Enclosure, 15
multispan, 58, 68

N

network address, 100, 102, 103
Non metallic enclosure, 13

O

Online Calibration, 62
Options, 157
Output, 156

P

P771 (IP) network address, 100, 102, 102
P772 (IP) baud rate, 100
P774 (IP) data bits, 101
P775 (IP) stop bits, 101
P778 (IP) modem available, 101
P779 (G) modem inactivity timeout, 102
parameter
    P001 language, 122
    P002 test reference selection, 122
    P005 design rate units, 123
    P019 manual span adjust, 124
    P100 relay function, 125
    P101 high alarm/deviation alarm, 126
    P107 relay alarms, 126
    P118 relay logic, 127
    P119 relay override, 127
    P201 mA output function, 128
    P204 mA output average, 128
    P250 mA input range, 129
    P255 mA input function, 129
    P270 auxilliary input function, 130
    P350 calibration security, 133
    P357 online calibration limits, 134
    P365 multispan, 135
    P568 batch pre-act, 141
    P631 totalizer resolution, 143
    P634 communication totalizer resolutions, 143
    P635 verification totalizer, 144
    P638 external totalizer resolution, 145
    P643 external contact closure, 145
    P648 totalizer reset, internal, 146

P770 (IP) protocol, 99
P773 parity, 100
P781 data message, 102
P931 running totalizer, 150
P943 load cell A/D reference, 150
P948 error log, 151
parameters
P358 online calibration activation, 134
P771 protocol address, 100
P790 hardware error, 148
P792 hardware error count, 148
parity, 100
read and write, 110
reading, 110
values, 113
writing, 111
paramter
P799 communications control, 149
PID, 86, 156
manual mode, 89
setpoint, 129
setup and tuning, 86
PID, 86, 156
PID Systems, 159
PID Tuning, 116
product ID, 110
PROGRAM, 31
protocol, 99

R

RAM, 155
rate
control, 77, 86
Reading Parameters, 111
Refer to, 16
Register Map, 110
relay, 77, 95, 125, 126, 126, 127
relay, 77, 95, 125, 126, 126, 127
functions, 126
relay, 77, 95, 125, 126, 126, 127
relay, 77, 95, 125, 126, 126, 127
relay
contacts, 156
reset
master, 76
reset a parameter value, 34
RS232 Port 3, 27
RUN, 31

S

Service, 165
Service and support
Internet, 165
setpoint
batch, 95
PID, 129
rate, 86
Slave, 119
SmartLinx, 98, 99
span, 57
calibation, 60
calibration, 58, 61, 69
correction, 58
direct, 57
initial, 56, 57, 60
multispan, 60
recalibration, 51, 53
remote, 60
verification, 144
Span, 158
Specification, 155
stop bits, 101
Support, 165
Support request, 165

T

Technical support, 165
partner, 165
personal contact, 165
test
load, 68
value, 149
Text Messages, 117
To access parameter directly, 33
To change a parameter value, 34
totalizer, 75, 146
internal, 144
totalizer, 75, 146

W

wiring
9-pin to RJ-11, 28, 30
guidelines, 98
Writing Parameters, 111

Z

zero, 156
    calibration, 67
    direct, 53
    initial, 52
    verification, 144
Zero, 158