SIEMENS

SITRANS T

Temperature transmitter SITRANS TH100/TH100Slim/TH320/TH420/TR320/TR420/TF320/TF420

Compact Operating Instructions

Getting started 1

Introduction 2

Safety notes 3

Installing/mounting 4

Connecting 5

Commissioning 6

Service and maintenance 7

Technical data 8

Product documentation and support A

Accessory part sealing plug / thread adapter B

7NG0.1. (TH320/420 mA/HART)
7NG0.2. (TR320/420 mA/HART)
7NG0.4. (TF320/420 single chamber housing mA/HART)
7NG0.5. (TF320/420 dual chamber housing mA/HART)
7NG3211-0. / 7NG3150-0NN00 (TH100/TH100 Slim)
7MF7902-1AS (local display)

07/2021
A5E41865021-AE

Legal information

Warning notice system

This manual contains notices you have to observe in order to ensure your personal safety, as well as to prevent damage to property. The notices referring to your personal safety are highlighted in the manual by a safety alert symbol, notices referring only to property damage have no safety alert symbol. These notices shown below are graded according to the degree of danger.

⚠ DANGER
indicates that death or severe personal injury **will** result if proper precautions are not taken.

⚠ WARNING
indicates that death or severe personal injury **may** result if proper precautions are not taken.

⚠ CAUTION
indicates that minor personal injury can result if proper precautions are not taken.

NOTICE
indicates that property damage can result if proper precautions are not taken.

If more than one degree of danger is present, the warning notice representing the highest degree of danger will be used. A notice warning of injury to persons with a safety alert symbol may also include a warning relating to property damage.

Qualified Personnel

The product/system described in this documentation may be operated only by **personnel qualified** for the specific task in accordance with the relevant documentation, in particular its warning notices and safety instructions. Qualified personnel are those who, based on their training and experience, are capable of identifying risks and avoiding potential hazards when working with these products/systems.

Proper use of Siemens products

Note the following:

⚠ WARNING
Siemens products may only be used for the applications described in the catalog and in the relevant technical documentation. If products and components from other manufacturers are used, these must be recommended or approved by Siemens. Proper transport, storage, installation, assembly, commissioning, operation and maintenance are required to ensure that the products operate safely and without any problems. The permissible ambient conditions must be complied with. The information in the relevant documentation must be observed.

Trademarks

All names identified by ® are registered trademarks of Siemens AG. The remaining trademarks in this publication may be trademarks whose use by third parties for their own purposes could violate the rights of the owner.

Disclaimer of Liability

We have reviewed the contents of this publication to ensure consistency with the hardware and software described. Since variance cannot be precluded entirely, we cannot guarantee full consistency. However, the information in this publication is reviewed regularly and any necessary corrections are included in subsequent editions.

Siemens AG
Digital Industries
Postfach 48 48
90026 NÜRNBERG
GERMANY

Document order number: A5E41865021
Ⓟ 09/2021 Subject to change

Copyright © Siemens AG 2018 - 2021.
All rights reserved

Table of contents

1 Getting started ... 7

1.1 Commissioning the SITRANS TH/TR with 4 ... 20 mA ... 7

1.2 Commissioning SITRANS TH/TR with HART ... 8

1.3 Commissioning SITRANS TF with 4 ... 20 mA ... 9

1.4 Commissioning SITRANS TF with HART ... 9

2 Introduction ... 11

2.1 Purpose of this documentation ... 11

2.2 Scope of validity of this document ... 11

2.3 Document history ... 11

2.4 Product compatibility ... 12

2.5 Intended use ... 12

2.6 Nameplate layout ... 14
2.6.1 Nameplate layout SITRANS TH100 ... 14
2.6.2 Nameplate layout SITRANS TH320/420 ... 15
2.6.3 Nameplate layout SITRANS TR ... 16
2.6.4 Nameplate layout SITRANS TF ... 17

2.7 Checking the consignment ... 17

2.8 Security information ... 18

2.9 Transportation and storage ... 18

2.10 Notes on warranty ... 19

3 Safety notes ... 21

3.1 Prerequisites for safe use ... 21
3.1.1 Warning symbols on the device ... 21
3.1.2 Laws and directives ... 21
3.1.3 Conformity with European directives ... 21
3.1.4 Improper device modifications ... 22

3.2 Requirements for special applications ... 22

3.3 Use in hazardous areas ... 22
3.3.1 Special conditions for use of SITRANS TF ... 23

4 Installing/mounting ... 27

4.1 Basic safety notes ... 27
4.1.1 ATEX/IECEx and others ... 27
4.1.1.1 Safety information for installation in "Intrinsic safety "ia/ib" ... 27
4.1.1.2 Safety information for installation in "Non-sparking nA/ec" and "Intrinsic safety ic" ... 28
4.1.2 FM/CSA ... 29
4.1.2.1 Safety information for installation in "Intrinsic safety "ia" ... 29

4.1.2.2 Safety information for installation in "Non Incendive nA" ... 30
4.1.3 SITRANS TF ... 31
4.1.3.1 Unsuitable cables, cable glands and/or plugs ... 31

4.2 Installing SITRANS TH100/320/420 in a connection head ... 31
4.2.1 Installing SITRANS TH100/320/420 in the base of the connection head ... 31
4.2.2 Installing SITRANS TH100/320/420 in the raised cover of the connection head ... 32

4.3 Mounting SITRANS TH100/320/420 on DIN rail and G rail ... 33

4.4 Installing SITRANS TR on DIN rail ... 34

4.5 Mounting the SITRANS TF single chamber housing ... 35
4.5.1 Mounting the device on the wall or pipe ... 35
4.5.2 Rotating the display ... 35

4.6 Mounting the SITRANS TF dual chamber housing ... 36
4.6.1 Mounting device to a pole with mounting bracket ... 36
4.6.2 Mounting device to the wall with mounting bracket ... 37

4.7 Removing ... 39

5 Connecting ... 41

5.1 Basic safety notes ... 41

5.2 Connecting the TH100 ... 43

5.3 Connecting TH100 Slim ... 44

5.4 Connecting TH320 ... 45

5.5 Connecting TH420 ... 46

5.6 Connecting TR320 ... 48

5.7 Connecting TR420 ... 50

5.8 Connecting the SITRANS TF single chamber housing ... 53
5.8.1 Opening the device ... 53
5.8.2 Connecting the SITRANS TF320 single chamber housing ... 53
5.8.3 Connecting the SITRANS TF420 single chamber housing ... 56
5.8.4 Closing the device ... 59

5.9 Connecting the SITRANS TF dual chamber housing ... 60
5.9.1 Opening the device ... 60
5.9.2 Connecting the SITRANS TF320 dual chamber housing ... 60
5.9.3 Connecting the SITRANS TF420 dual chamber housing ... 62
5.9.4 Closing the device ... 65

6 Commissioning ... 67

6.1 Basic safety notes ... 67

6.2 Switching on the supply voltage ... 67

6.3 Commissioning the SITRANS TH/TR with 4 ... 20 mA ... 68

6.4 Commissioning SITRANS TH/TR with HART ... 69

6.5 Commissioning SITRANS TF with 4 ... 20 mA ... 70

6.6 Commissioning SITRANS TF with HART ... 70

7 Service and maintenance ... 73

7.1 Basic safety notes ... 73
7.1.1 Maintenance ... 73
7.1.2 SITRANS TF ... 73

7.2 Cleaning ... 74

7.3 Maintenance and repair work ... 75
7.3.1 SITRANS TF ... 75
7.3.1.1 Checking the seals ... 76
7.3.1.2 Check cable glands ... 76

7.4 Absence of pollutants ... 76

7.5 Return procedure ... 77

7.6 Disposal ... 77

8 Technical data ... 79

8.1 SITRANS TH100/TH100 slim ... 79
8.1.1 General specifications ... 79
8.1.2 Certificates and approvals ... 80

8.2 SITRANS TH320/TH420/TR320/TR420/TF320/TF420 ... 80
8.2.1 Operating conditions ... 80
8.2.2 Construction ... 81
8.2.3 General specifications ... 81
8.2.4 Certificates and approvals ... 82
8.2.4.1 ATEX/IECEx and others ... 82
8.2.4.2 FM/CSA ... 88

8.3 Display ... 89

A Product documentation and support ... 91

A.1 Product documentation ... 91

A.2 Technical support ... 92

B Accessory part sealing plug / thread adapter ... 93

B.1 Intended use of accessory part ... 93

B.2 Safety instructions for accessory part ... 93

B.3 Technical specifications of accessory part ... 94

B.4 Dimensional drawings of accessory part ... 95

Index ... 97

Getting started

1

1.1 Commissioning the SITRANS TH/TR with 4 ... 20 mA

Condition

Before you start, note the following safety notes:

- General safety notes (Page 21)
- Basic safety notes: Installing/mounting (Page 27)
- Basic safety notes: Connecting (Page 41)
- Basic safety notes: Commissioning (Page 67)

Read the entire device manual in order to achieve the optimum performance of the device.

Procedure

1. If you want to change the factory settings, configure the device using the USB modem and the SIPROM T parameter assignment software.
   – Read the operating instructions for information on this.
2. Install the device.
   Installing SITRANS TH100/320/420 in a connection head (Page 31)
   Installing SITRANS TH100/320/420 in the raised cover of the connection head (Page 32)
   Mounting SITRANS TH100/320/420 on DIN rail and G rail (Page 33)
   Installing SITRANS TR on DIN rail (Page 34)
3. Connect the device.
   Connecting the TH100 (Page 43)
   Connecting TH100 Slim (Page 44)
   Connecting TH320 (Page 45)
   Connecting TH420 (Page 46)
   Connecting TR320 (Page 48)
   Connecting TR420 (Page 50)
4. For SITRANS TH100/320/420/TR devices with intrinsically safe protection type, use an isolating power supply that corresponds to the requirements of the relevant type of protection.
5. Switch on the power supply.
   Switching on the supply voltage (Page 67)
6. Wait for 2 seconds.
   After this startup time, the device is operational.
7. Wait 5 minutes to get exact measured values.

Result

The LED is lit green.

1.2 Commissioning SITRANS TH/TR with HART

Condition

Before you start, note the following safety notes:

- General safety notes (Page 21)
- Basic safety notes: Installing/mounting (Page 27)
- Basic safety notes: Connecting (Page 41)
- Basic safety notes: Commissioning (Page 67)

Read the entire device manual in order to achieve the optimum performance of the device.

Procedure

1. Install/mount the device.
   Installing SITRANS TH100/320/420 in a connection head (Page 31)
   Mounting SITRANS TH100/320/420 on DIN rail and G rail (Page 33)
   Installing SITRANS TR on DIN rail (Page 34)
2. Connect the device.
   Connecting TH320 (Page 45)
   Connecting TH420 (Page 46)
   Connecting TR320 (Page 48)
   Connecting TR420 (Page 50)
3. For devices with intrinsically safe protection type, use an isolating power supply that corresponds to the requirements of the relevant type of protection.
4. Switch on the power supply.
   Switching on the supply voltage (Page 67)
5. Wait for 2 seconds.
   After this startup time, the device is operational.
6. Wait 5 minutes to get exact measured values.
7. If you want to change the factory settings, configure the device using remote operation.
   – Read the operating instructions for information on this.
8. Lock the device.
   – Read the operating instructions for information on this.

1.3 Commissioning SITRANS TF with 4 ... 20 mA

Condition

Before you start, note the following safety notes:

- General safety notes (Page 21)
- Basic safety notes: Installing/mounting (Page 27)
- Basic safety notes: Connecting (Page 41)
- Basic safety notes: Commissioning (Page 67)

Read the entire device manual in order to achieve the optimum performance of the device.

Procedure

1. Mount the device.
   Mounting the SITRANS TF single chamber housing (Page 35)
   Mounting the SITRANS TF dual chamber housing (Page 36)
2. Connect the device.
   Connecting the SITRANS TF single chamber housing (Page 53)
   Connecting the SITRANS TF dual chamber housing (Page 60)
3. For devices with intrinsically safe protection type, use an isolating power supply that corresponds to the requirements of the relevant type of protection.
4. Switch on the power supply.
   Switching on the supply voltage (Page 67)
5. Wait for 2 seconds.
   After this startup time, the device is operational.
6. Wait 5 minutes to get exact measured values.
7. If you want to change the factory settings, configure the device using the keys or the USB modem and the SIPROM T parameter assignment software.
   – Read the operating instructions for information on this.
8. Lock the device.
   – Read the operating instructions for information on this.

1.4 Commissioning SITRANS TF with HART

Condition

Before you start, note the following safety notes:

- General safety notes (Page 21)
- Basic safety notes: Installing/mounting (Page 27)

- Basic safety notes: Connecting (Page 41)
- Basic safety notes: Commissioning (Page 67)

Read the entire device manual in order to achieve the optimum performance of the device.

Procedure

1. Mount the device.
   Mounting the SITRANS TF single chamber housing (Page 35)
   Mounting the SITRANS TF dual chamber housing (Page 36)
2. Connect the device.
   Connecting the SITRANS TF single chamber housing (Page 53)
   Connecting the SITRANS TF dual chamber housing (Page 60)
3. For devices with intrinsically safe protection type, use an isolating power supply that corresponds to the requirements of the relevant type of protection.
4. Switch on the power supply.
   Switching on the supply voltage (Page 67)
5. Wait for 10 seconds.
   After this startup time, the device is operational.
6. Wait 5 minutes to get exact measured values.
7. If you want to change the factory settings, configure the device using remote operation.
   – Read the operating instructions for information on this.
8. Lock the device.
   – Read the operating instructions for information on this.

Introduction 2

2.1 Purpose of this documentation

These instructions are a brief summary of important features, functions and safety information, and contain all information required for safe use of the device. Read the instructions carefully prior to installation and commissioning. In order to use the device correctly, first review its principle of operation.

The instructions are aimed at persons who install and commission the device.

To realize optimum performance from the device, read the complete operating instructions.

2.2 Scope of validity of this document

Article no.	Product
7NG031..	TH320 with 4 to 20 mA/HART
7NG041..	TH420 with 4 to 20 mA/HART
7NG032..	TR320 with 4 to 20 mA/HART
7NG042..	TR420 with 4 to 20 mA/HART
7NG034..	TF320 single chamber enclosure with 4 to 20 mA
7NG035..	TF320 two-chamber enclosure with 4 to 20 mA
7NG044..	TF420 single chamber enclosure with 4 to 20 mA/HART
7NG045..	TF420 two-chamber enclosure with 4 to 20 mA/HART
7NG3211-0..	TH100 with 4 to 20 mA
7NG3150-0NN 00	TH100 Slim
7MF7902-1AS	Local display

2.3 Document history

The following table contains the major changes in the documentation compared to the previous edition.

Edition	Comment
07/2021	SITRANS TH100 connected Certificates and approvals revised
01/2021	Revised technical data on certificates and approvals

2.4 Product compatibility

The following table describes the compatibility between the edition of this manual, the device version, the engineering system and the associated EDD.

Manual edition	Comments	Device version	Compatible version of device integration package	
07/2021 & 08/2020	New device features	HART 7 TH/TR320/420: 01.02.xx or higher TF320/420: 01.01.01 or higher	SIMATIC PDM V9.1	EDD: 01.00.00 or higher
			AMS Device Manager V13.3	EDD: 01.00.01 or higher
			DTM	EDD: 01.00.01 or higher
			Field Communicator FC 375/475	EDD: 01.00.01 or higher

2.5 Intended use

SITRANS TH320/TR320

The SITRANS TH320/TR420 transmitter can be used in all sectors. Its compact size means that it can be installed in connection heads of type B (DIN 43729) or larger. Due to its universal input stage, the following sensors and signal sources can be connected:

- Resistance thermometer (2-wire, 3-wire, 4-wire connection)
- Thermocouples
- Linear resistance, potentiometer and DC voltage sources

Without HART communication interface:

- The output signal is a load-independent direct current from 4 to 20 mA in accordance with the input characteristic.

With HART communication interface:

- The output signal is a load-independent direct current from 4 to 20 mA in accordance with the input characteristic, superimposed by the digital HART signal.

Transmitters of the "intrinsically safe or Zone 2 increased safety" type of protection can be installed in hazardous areas. The device meets the requirements of the EU Directive 2014/34/EU (ATEX), the FM and CSA regulations as well as other national approvals, e.g. EACEx, NEPSI, KCs, Inmetro.

SITRANS TH420/TR420

The SITRANS TH420/TR420 transmitter with two inputs can be used in all sectors. Its compact size means that it can be installed in connection heads of type B (DIN 43729) or larger. Due to its universal input stage, the following sensors and signal sources can be connected:in redundant operation (high input availability):

- 2 resistance thermometers (2-wire, 3-wire, 4-wire connection)
- 2 thermocouples

- 1 thermocouple and 1 resistance thermometer (2-, 3-, 4-wire connection)
- 2 linear resistances, potentiometer and DC voltage sources

The output signal is a load-independent direct current from 4 to 20 mA in accordance with the input characteristic, superimposed by the digital HART signal.

The dual input mode also supports drift detection of the inputs, whereby maintenance intervals can be more easily planned.

Transmitters of the "intrinsically safe or Zone 2 Increased Safety" type of protection can be installed in hazardous areas. The device meets the requirements of the EU Directive 2014/34/EU (ATEX), the FM and CSA regulations as well as other national approvals, e.g. EACEx, NEPSI, KCs, Inmetro.

SITRANS TF320/TF420

The SITRANS TF temperature transmitter converts sensor signals into a load-independent DC signal according to the sensor characteristic. The following sensors and signal sources can be connected to the input block:

- Resistance thermometer
- Thermocouples
- Resistance-based sensor/potentiometer
- DC voltage sources

The output signal is a load-independent direct current from 4 to 20 mA in accordance with the input characteristic, superimposed by the digital HART signal.

Transmitters of the "intrinsically safe or Zone 2 Increased Safety" type of protection can be installed in hazardous areas. The device meets the requirements of the EU Directive 2014/34/EU (ATEX), the FM and CSA regulations as well as other national approvals, e.g. EACEx, NEPSI, KCs, Inmetro.

2.6 Nameplate layout

2.6.1 Nameplate layout SITRANS TH100

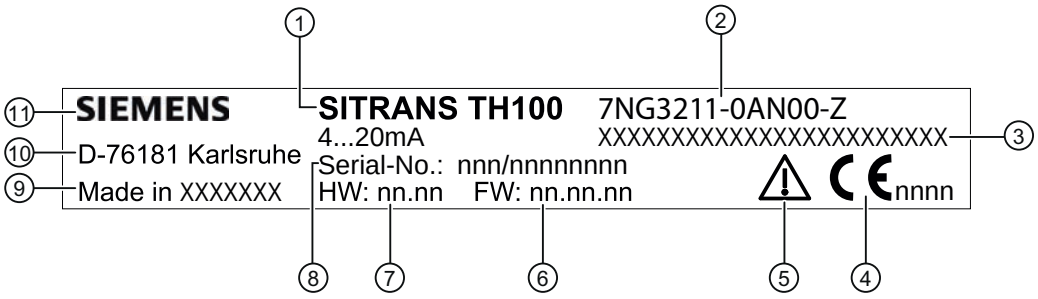

①	Product name	⑦	Hardware change
②	Article number	⑧	Serial number
③	Additional data, optional	⑨	Place of manufacture
④	CE marking with ID number of the named testing authority	⑩	Manufacturer's address
⑤	Read the operating instructions	⑪	Manufacturer
⑥	Firmware revision		

Figure 2-1 Example of nameplate with general information

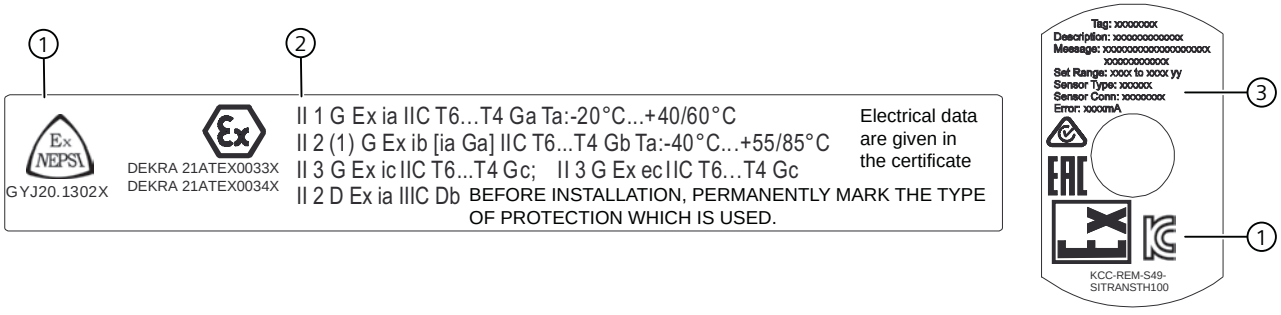

① Conformity with country-specific directives
② Designation
③ Information on customer-specific configuration

Figure 2-2 Example of nameplates with approval information

2.6.2 Nameplate layout SITRANS TH320/420

① Conformity with country-specific guidelines
② Manufacturer's address
③ Place of manufacture
④ Read the compact operating instructions
⑤ CE marking with ID number of the named testing authority
⑥ Serial number
First two digits = year of manufacture
⑦ Device version
⑧ Product name
⑨ Manufacturer

Figure 2-3 Example of nameplate for SITRANS TH with approval information

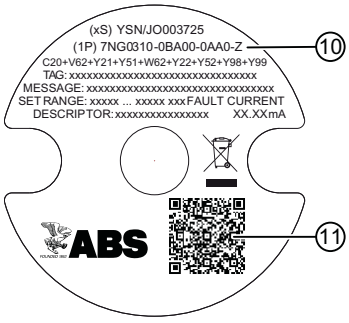

⑩ Article number
⑪ QR code for mobile website with device-specific information about the product

Figure 2-4 Example of nameplate on the base of the SITRANS TH with general information

2.6.3 Nameplate layout SITRANS TR

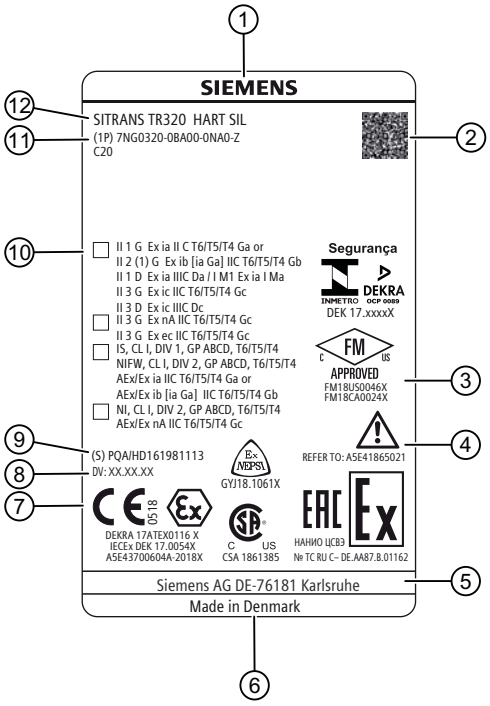

①	Manufacturer	⑦	CE marking with ID number of the named testing authority
②	QR code for mobile website with device-specific information about the product	⑧	Device version
③	Conformity with country-specific guidelines	⑨	Serial number First two digits = year of manufacture
④	Read the compact operating instructions	⑩	Ex marking
⑤	Manufacturer's address	⑪	Article number
⑥	Place of manufacture	⑫	Product name

Figure 2-5 Example of nameplate for SITRANS TR with approval information

2.6.4 Nameplate layout SITRANS TF

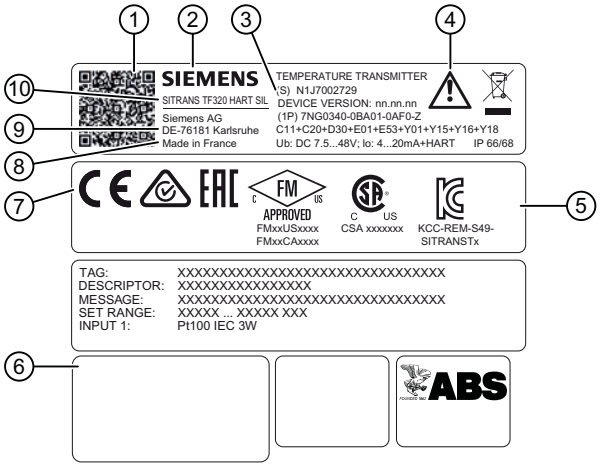

①	QR code for mobile website with device-specific information about the product		⑤	Conformity with country-specific guidelines
②	Manufacturer		⑥	Marking for hazardous area
③	(S)	Serial number First two digits = year of manufacture	⑦	CE marking with ID number of the named testing authority
	(1P)	Article number	⑧	Place of manufacture
	DEVICE NO	Device version	⑨	Manufacturer's address
④	Observe the compact operating instructions		⑩	Product name

Figure 2-6 Example of nameplate for SITRANS TF single chamber housing

2.7 Checking the consignment

1. Check the packaging and the delivered items for visible damages.
2. Report any claims for damages immediately to the shipping company.
3. Retain damaged parts for clarification.
4. Check the scope of delivery by comparing your order to the shipping documents for correctness and completeness.

⚠ WARNING

Using a damaged or incomplete device

Risk of explosion in hazardous areas.

- Do not use damaged or incomplete devices.

2.8 Security information

Siemens provides products and solutions with industrial security functions that support the secure operation of plants, systems, machines and networks.

In order to protect plants, systems, machines and networks against cyber threats, it is necessary to implement – and continuously maintain – a holistic, state-of-the-art industrial security concept. Siemens' products and solutions constitute one element of such a concept.

Customers are responsible for preventing unauthorized access to their plants, systems, machines and networks. Such systems, machines and components should only be connected to an enterprise network or the internet if and to the extent such a connection is necessary and only when appropriate security measures (e.g. firewalls and/or network segmentation) are in place.

For additional information on industrial security measures that may be implemented, please visit
https://www.siemens.com/industrialsecurity.

Siemens' products and solutions undergo continuous development to make them more secure. Siemens strongly recommends that product updates are applied as soon as they are available and that the latest product versions are used. Use of product versions that are no longer supported, and failure to apply the latest updates may increase customer's exposure to cyber threats.

To stay informed about product updates, subscribe to the Siemens Industrial Security RSS Feed under
https://www.siemens.com/industrialsecurity.

2.9 Transportation and storage

To guarantee sufficient protection during transport and storage, observe the following:

- Keep the original packaging for subsequent transportation.
- Devices/replacement parts should be returned in their original packaging.
- If the original packaging is no longer available, ensure that all shipments are properly packaged to provide sufficient protection during transport. Siemens cannot assume liability for any costs associated with transportation damages.

NOTICE
Insufficient protection during storage The packaging only provides limited protection against moisture and infiltration. • Provide additional packaging as necessary.

Special conditions for storage and transportation of the device are listed in Technical data (Page 79).

2.10 Notes on warranty

The contents of this manual shall not become part of or modify any prior or existing agreement, commitment or legal relationship. The sales contract contains all obligations on the part of Siemens as well as the complete and solely applicable warranty conditions. Any statements regarding device versions described in the manual do not create new warranties or modify the existing warranty.

The content reflects the technical status at the time of publishing. Siemens reserves the right to make technical changes in the course of further development.

Safety notes

3

3.1 Prerequisites for safe use

This device left the factory in good working condition. In order to maintain this status and to ensure safe operation of the device, observe these instructions and all the specifications relevant to safety.

Observe the information and symbols on the device. Do not remove any information or symbols from the device. Always keep the information and symbols in a completely legible state.

3.1.1 Warning symbols on the device

Symbol	Explanation
⚠	Consult operating instructions

3.1.2 Laws and directives

Observe the safety rules, provisions and laws applicable in your country during connection, assembly and operation. These include, for example:

- National Electrical Code (NEC - NFPA 70) (USA)
- Canadian Electrical Code (CEC) (Canada)

Further provisions for hazardous area applications are for example:

- IEC 60079-14 (international)
- EN 60079-14 (EU)

3.1.3 Conformity with European directives

The CE mark on the device is a sign of conformity with the following European directives:

Electromagnetic compatibility EMC 2014/30/EU	Directive of the European Parliament and of the Council on the harmonization of the laws of the Member States relating to electromagnetic compatibility
Atmosphère explosible ATEX 2014/34/EU	Directive of the European Parliament and of the Council on the harmonization of the laws of the Member States relating to equipment and protective systems intended for use in potentially explosive atmospheres

The applicable directives can be found in the EU conformity declaration of the specific device.

3.1.4 Improper device modifications

WARNING

Improper device modifications

Risk to personnel, system and environment can result from modifications to the device, particularly in hazardous areas.

- Only carry out modifications that are described in the instructions for the device. Failure to observe this requirement cancels the manufacturer's warranty and the product approvals.

3.2 Requirements for special applications

Due to the large number of possible applications, each detail of the described device versions for each possible scenario during commissioning, operation, maintenance or operation in systems cannot be considered in the instructions. If you need additional information not covered by these instructions, contact your local Siemens office or company representative.

Note

Operation under special ambient conditions

We highly recommend that you contact your Siemens representative or our application department before you operate the device under special ambient conditions as can be encountered in nuclear power plants or when the device is used for research and development purposes.

3.3 Use in hazardous areas

Qualified personnel for hazardous area applications

Persons who install, connect, commission, operate, and service the device in a hazardous area must have the following specific qualifications:

- They are authorized, trained or instructed in operating and maintaining devices and systems according to the safety regulations for electrical circuits, high pressures, aggressive, and hazardous media.
- They are authorized, trained, or instructed in carrying out work on electrical circuits for hazardous systems.
- They are trained or instructed in maintenance and use of appropriate safety equipment according to the pertinent safety regulations.

WARNING

Use in hazardous area

Risk of explosion.

- Only use equipment that is approved for use in the intended hazardous area and labeled accordingly.
- Do not use devices that have been operated outside the conditions specified for hazardous areas. If you have used the device outside the conditions for hazardous areas, make all Ex markings unrecognizable on the nameplate.

WARNING

Loss of safety of device with type of protection "Intrinsic safety Ex i"

If the device or its components have already been operated in non-intrinsically safe circuits or the electrical specifications have not been observed, the safety of the device is no longer ensured for use in hazardous areas. There is a risk of explosion.

- Connect the device with type of protection "Intrinsic safety" solely to an intrinsically safe circuit.
- Observe the specifications for the electrical data on the certificate and/or in Technical data (Page 79).

3.3.1 Special conditions for use of SITRANS TF

WARNING

Special conditions for use of SITRANS TF with flameproof enclosure "Ex d" type of protection and "Ex t" dust protection

- Observe the ambient temperature, the type of protection and the electrical data in the certificate of the SITRANS TF device and/or in the chapter Technical data (Page 79).
- The sealing plug and the thread adapter (components) can be used for installation in electrical equipment of flameproof "Ex d" type of protection of groups IIA, IIB, IIC as well as dust protection by enclosure "Ex t" type of protection.
- At ambient temperatures ≥ 60 °C, heat-resistant cables with a temperature rating of at least 20 K above ambient temperature must be used.
- Do not repair flameproof joints. Flameproof joints are, for example, threaded inlets for cable glands.
- Risk of explosion in hazardous areas if electrostatic charges develop, for example, when cleaning plastic surfaces with a dry cloth. Prevent electrostatic charging in hazardous areas.

See also

Unsuitable cables, cable glands and/or plugs (Page 31)

SITRANS TF (Page 75)

Safety information for installation in "Non-sparking nA/ec" and "Intrinsic safety ic" (Page 28)

Special conditions for use of SITRANS TF (Page 23)

Basic safety notes (Page 41)

Accessory part sealing plug / thread adapter (Page 93)

WARNING

Incorrect mounting of temperature sensors on SITRANS TF

Risk of explosion in hazardous areas. If you attach a temperature sensor to an explosion-proof SITRANS TF enclosure via the cable inlet, you must observe the special conditions.

- Observe the ambient temperature, the type of protection and the electrical data in the certificate of the SITRANS TF device and/or in the chapter Technical data (Page 79).
- The medium temperature influences the ambient temperature of the SITRANS TF device. If necessary, reduce the ambient temperature for the SITRANS TF. Refer to the information on the nameplate and/or in Technical data (Page 79).
- The installation of a temperature sensor may increase the volume for the pressure-resistant enclosure.
- Arrange to have the installation of a temperature sensor on a SITRANS TF evaluated by an accredited approval body.

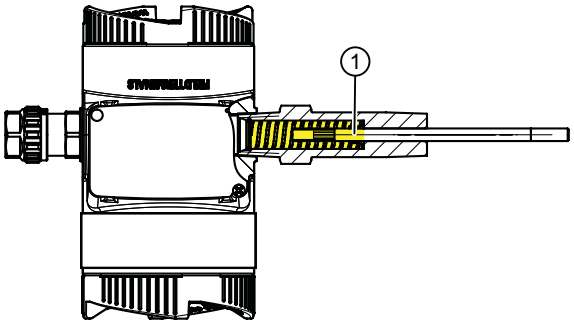

① Yellow area = additional volume when connecting a temperature sensor to a SITRANS TF double chamber housing

WARNING

Use of incorrect device parts in potentially explosive environments

Devices and their associated device parts are either approved for different types of protection or they do not have explosion protection. There is a risk of explosion if device parts (such as covers) are used for devices with explosion protection that are not expressly suited for this type of protection. If you do not adhere to these guidelines, the test certificates and the manufacturer warranty will become null and void.

- Use only device parts that have been approved for the respective type of protection in the potentially explosive environment. Covers that are not suited for the "explosion-proof" type of protection are identified as such by a notice label attached to the inside of the cover with "Not Ex d Not SIL".
- Do not swap device parts unless the manufacturer specifically ensures compatibility of these parts.

Installing/mounting

4

4.1 Basic safety notes

NOTICE
Direct sunlight Damage to device. The device can overheat or materials become brittle due to UV exposure. • Protect the device from direct sunlight. • Make sure that the maximum permissible ambient temperature is not exceeded. Refer to the information in Technical data (Page 79).

4.1.1 ATEX/IECEx and others

4.1.1.1 Safety information for installation in "Intrinsic safety "ia/ib"

Zones 0, 1, 2, 20, 21, 22 and M1

General installation information

The first two digits of the serial number stand for the year of production. With aluminum enclosures, you also have to make sure during installation that ignition sources due to sparks caused by impact or friction are prevented. In the case of enclosures made of non-metallic materials or painted metal, electrostatic charging must be prevented.

The distance between terminals, including the stripped core, must be a minimum of 3 mm from each grounded metal part.

The test terminals allow for direct measurement of the loop current without impairing the loop integrity. When using the test terminals, the transmitter must be connected to the supply voltage. Only use certified testing devices for installation in hazardous areas. If the transmitter/ local display is used in Ex nA or Ex ec protection type, it can no longer be used with intrinsic safety afterwards.

Intrinsically safe circuits must withstand an insulation voltage of 500 V AC. The insulation voltage is generated towards grounded enclosure parts, e.g. field housing or control cabinet. Observe the installation requirements according to IEC/EN 60079-11 Section 6.3.13. These requirements are met by the TF320 /420 temperature transmitters and the TS500 temperature sensor from Siemens.

Note the following information for installation in a potentially explosive gas atmosphere:

The transmitter/local display must be installed in an enclosure of form B in accordance with DIN 43729 or equivalent so that at least IP20 protection in accordance with IEC/EN 60529 is guaranteed.
The enclosure must be suitable for the application and installed to meet the applicable regulations.

Note the following information for installation in a potentially explosive dust atmosphere:

The transmitter/local display must be installed in a metal enclosure of form B in accordance with DIN 43729 or equivalent so that at least IP6X protection in accordance with IEC/EN 60529 is guaranteed.
The enclosure must be suitable for the application and installed to meet the applicable regulations. Cable entries and dummy elements must meet the same requirements.
With dust deposits up to 5 mm, the maximum surface temperature on the outside of the enclosure is 20 C higher than the maximum ambient temperature. Remove any dust deposits in excess of 5 mm.

Note the following instructions for installation in mines:

The transmitter/local display must be installed in a metal enclosure which guarantees at least IP6X protection in accordance with IEC/EN 60529.
Aluminum enclosure are not permitted in mines.
The enclosure must be suitable for the application and installed to meet the applicable regulations.
Cable entries and dummy elements must meet the same requirements.

4.1.1.2 Safety information for installation in "Non-sparking nA/ec" and "Intrinsic safety ic"

Zones 2 and 22

General installation information

In the case of enclosures made of non-metallic materials or painted metal, electrostatic charging must be prevented. At ambient temperatures ≥ 60 °C, heat-resistant cables with a temperature rating of at least 20 K above ambient temperature must be used.

The enclosure must be suitable for the application and professionally installed. With dust deposits up to 5 mm, the maximum surface temperature on the outside of the enclosure is 20 C higher than the maximum ambient temperature. Remove any dust deposits in excess of 5 mm.

The distance between terminals, including the stripped core, must be a minimum of 3 mm from each grounded metal part.

A test connection is only permissible if the area is safe or the supply/output circuit and the utilized ammeter are intrinsically safe.

Note the following information for installation in a potentially explosive gas atmosphere:

In "Ex ic" areas, the transmitter/local display must be installed in an enclosure that ensures at least IP20 degree of protection according to IEC 60529 and that is suitable for the application and is installed professionally.

In "Ex nA" and "Ex ec" areas, the transmitter/local display must be installed in an enclosure that ensures at least IP54 degree of protection according to IEC 60079-0. In addition, the enclosure

must have an internal Pollution degree 2 or better according to IEC 60664-1.
Cable entries and dummy elements must meet the same requirements.

Note the following information for installation in a potentially explosive dust atmosphere:

If the transmitter/local display is supplied with an intrinsically safe signal "ic" and has a connection to an intrinsically safe signal "ic" (e.g. a passive device), it must be installed in a metal enclosure form B according to DIN 43729 or equivalent that ensures at least IP6X degree of protection according to IEC 60529.
Cable entries and dummy elements must meet the same requirements.

If the transmitter/local display is supplied with a non-sparking signal "nA/ec" or has a connection to a non-sparking signal, it must be installed in an enclosure that ensures at least IP6X degree of protection according to IEC 60529 and that meets the requirements of protection type EX t.
Cable entries and dummy elements must meet the same requirements.

4.1.2 FM/CSA

4.1.2.1 Safety information for installation in "Intrinsic safety "ia"

Hazardous areas CL I, Div 1, GP ABCD CL I, Zone 0 IIC

General installation information

- The installation must be carried out in accordance with the regulations of the US National Electrical Code (NEC) or in Canada the Canadian Electrical Code (CEC).
- Devices with FM approval for intrinsic safety can be connected to barriers according to the ENTITY CONCEPT. This concept allows the interconnection of approved transmitters, measuring instruments and other devices in combinations that have not been specifically investigated by FM, provided that the criteria of the authority are met. This combination is intrinsically safe if the entity concept is acceptable to the authority responsible for the installation.
- The entity concept comprises the following criteria: The intrinsically safe devices, with the exception of barriers, must not be a power source. The maximum voltage Ui (Vmax), the maximum current Ii (Imax) and the maximum power Pi (Pmax) that an intrinsically safe device can receive without loss of intrinsic safety must be greater than or equal to the voltage (Uo or Uoc or Vt), current (Io or Isc or It) and power values Po that can be supplied from the barrier.
- The sum of the maximum unprotected capacitance (Ci) of each intrinsically safe device and the connecting cables must be less than the capacitance (Ca) which can be safely connected to the barrier.
- The sum of the maximum unprotected inductance (Li) of each intrinsically safe device and the connecting cables must be less than the inductance (La) which can be safely connected to the barrier.
- The entity parameters Uo, Voc or Vt and Io, Isc or It, as well as Ca and La for barriers are communicated by the barrier manufacturer.

- The transmitter/local display must be installed in a suitable enclosure that complies with the installation requirements of the Canadian Electrical Code (CEC) or, in the USA, the National Electrical Code (NEC).
- In the case of enclosures made of non-metallic materials or painted metal, electrostatic charging must be prevented.
- Supply cables with a temperature rating of at least 5 C above ambient temperature must be used.

WARNING: Intrinsic safety may be impaired when components are replaced.

4.1.2.2 Safety information for installation in "Non Incendive nA"

Hazardous areas CL I, Div 2, GP ABCD CL I, Zone 2 IIC

General installation information

- The transmitter/local display must be installed in an enclosure that ensures at least IP54 degree of protection according to IEC 60529 and that is suitable for the application and is installed professionally. Cable entries and dummy elements must meet the same requirements.
- In the case of enclosures made of non-metallic materials or painted metal, electrostatic charging must be prevented.
- Supply cables with a temperature rating of at least 5 C above ambient temperature must be used.

WARNING: Replacement of components may impair suitability for Class I, Division 2 areas.

WARNING: Do not perform terminal connection work on equipment if the power has not been switched off and the area has not been designated as safe.

Installation with "non incendive field wiring" protection type

The wiring concept for the "Non Incendive Field Wiring" type of protection allows the wiring of devices with "Non Incendive Field Wiring" type of protection with associated devices of the same type of protection or associated devices with "Intrinsic safety" type of protection or associated devices that have not been specifically tested as a combined system, with an permissible wiring procedure for unclassified installation locations, $Voc < V_{max}$, $Ca \geq Ci + C_{Cable}$, $La \geq Li + L_{Cable}$

4.1.3 SITRANS TF

4.1.3.1 Unsuitable cables, cable glands and/or plugs

WARNING

Unsuitable cables, cable glands and/or plugs

Risk of explosion in hazardous areas.

- Use only cable glands/plugs that comply with the requirements for the relevant type of protection.
- Tighten the cable glands in accordance with the torques specified in Technical data (Page 79).
- Close unused cable inlets for the electrical connections.
- When replacing cable glands, only use cable glands of the same type.
- After installation, check that the cables are seated firmly.

NOTICE

Use of line and cable entries made of plastic in hazardous areas

Device damage caused by impact at temperatures below -20 °C.

- Make sure that the line and cable entries are protected from impacts.

4.2 Installing SITRANS TH100/320/420 in a connection head

4.2.1 Installing SITRANS TH100/320/420 in the base of the connection head

Condition

The transmitter is only designed for installation in a type B connection head or larger.

Procedure

1. Place the springs on the fixing screws.
2. Secure the lock washers.

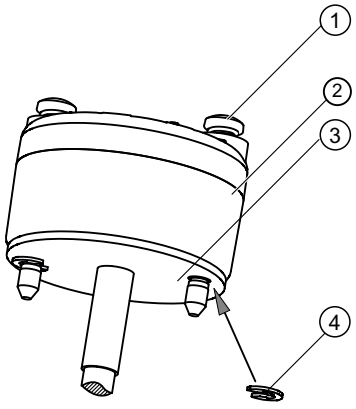

① Fixing screw M4x35 ② Transmitter
③ Round plate ④ Lock washer DIN 6799 - 3.2 A2

Figure 4-1 Securing the lock washer

3. Secure the transmitter with the fixing screws in the connection head base.

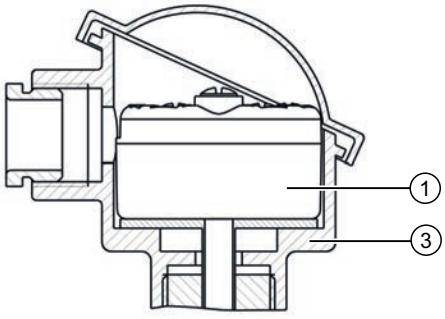

① Transmitter
③ Connection head

Figure 4-2 Securing the transmitter in the connection head base

4.2.2 Installing SITRANS TH100/320/420 in the raised cover of the connection head

Condition

The transmitter is only designed for installation in a type B connection head or larger.

Procedure

1. Place the springs on the fixing screws.
2. Secure the transmitter with the fixing screws in the connection head cover.

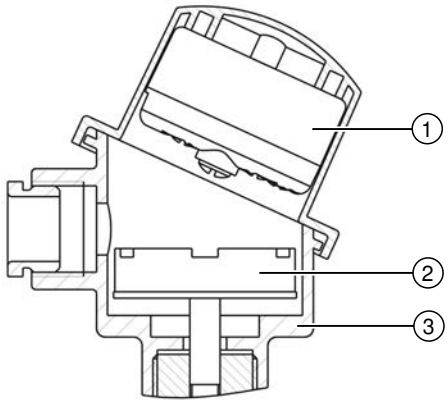

① Transmitter
② Ceramic base of the measuring element
③ Connection head

Figure 4-3 Securing the transmitter in the connection head cover

4.3 Mounting SITRANS TH100/320/420 on DIN rail and G rail

Note

Fixing rings

The fixing rings included in the scope of delivery for the transmitter are not required for the installation on DIN rails or G rails.

You can either install the transmitter on a 35 mm DIN rail or on a 32 mm G rail. DIN EN 60715 applies to DIN rails and G rails in this context. The DIN/G rail adapter required for installation can be ordered as an accessory under the Order No. 7NG3092-8KA.

Adhere to the ambient conditions specified in the technical data.

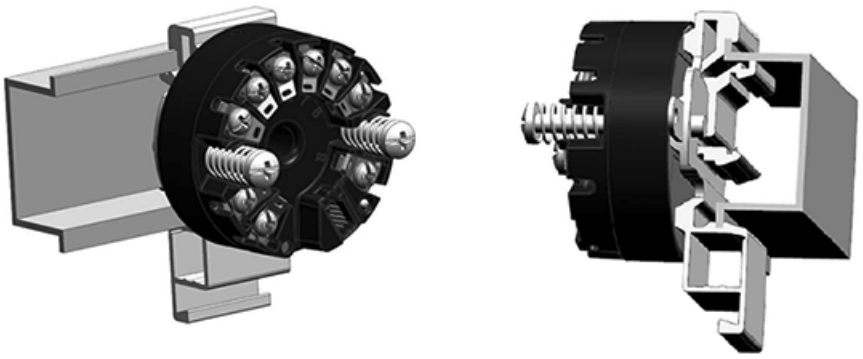

Figure 4-4 Securing the transmitter on DIN rails

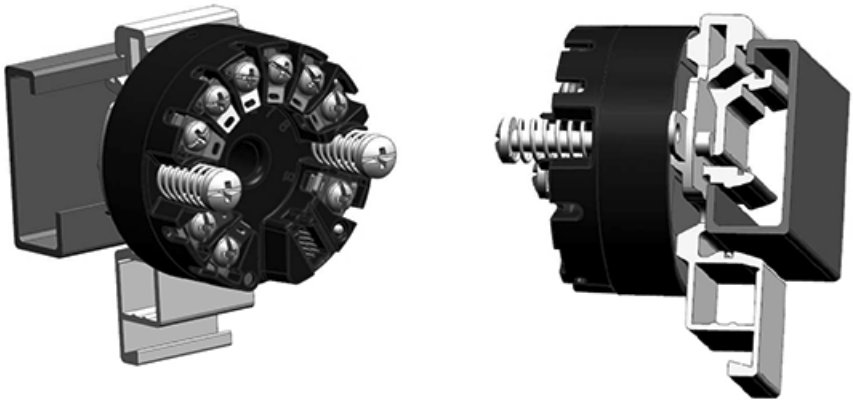

Figure 4-5 Securing the transmitter on G rails

4.4 Installing SITRANS TR on DIN rail

The transmitter is secured to a 35 mm DIN rail in accordance with DIN EN 60715.

Comply with the ambient conditions specified in the technical data.

4.5 Mounting the SITRANS TF single chamber housing

4.5.1 Mounting the device on the wall or pipe

Procedure

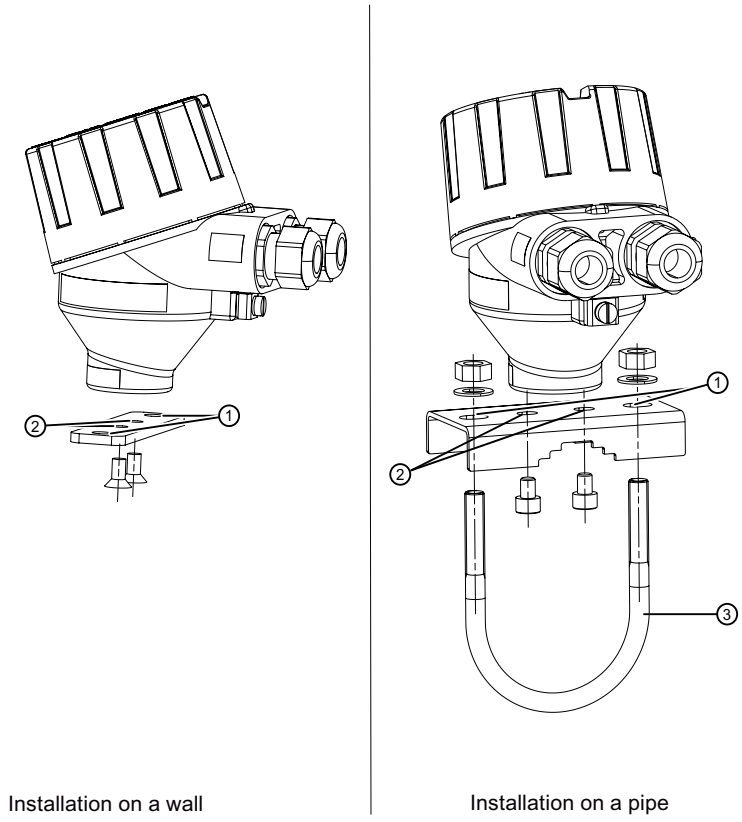

① Fastening holes for fastening to a wall or to the pipe clamp
② Fastening holes for fastening the rail to the device
③ Pipe clamp

1. Use the fixing screws to fasten the bracket on the device.
2. Fasten the rail to the wall or to the pipe clamp.

4.5.2 Rotating the display

To read the display in any mounting position, you can rotate it by 360° in 90° steps.

Procedure

1. Use a 3 mm Allen key to loosen the safety catch.
2. Unscrew the cover.
3. Remove the display from the holder.

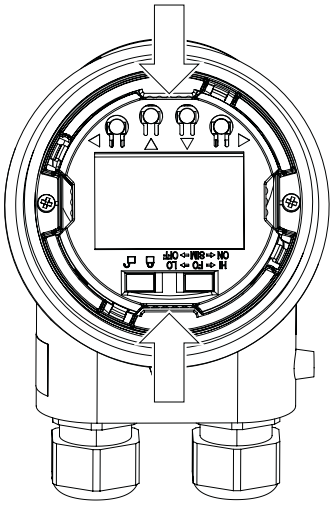

Figure 4-6 Remove the display

4. Rotate the display in 90° increments to the desired position.
5. Mount the display once again at the desired position.
6. Screw the cover back on as far as it will go.
7. Use a 3 mm Allen key to secure the safety catch.

4.6 Mounting the SITRANS TF dual chamber housing

4.6.1 Mounting device to a pole with mounting bracket

Introduction

The mounting holes in the bracket ② and the device enclosure ① determine the permitted mounting positions.

Procedure

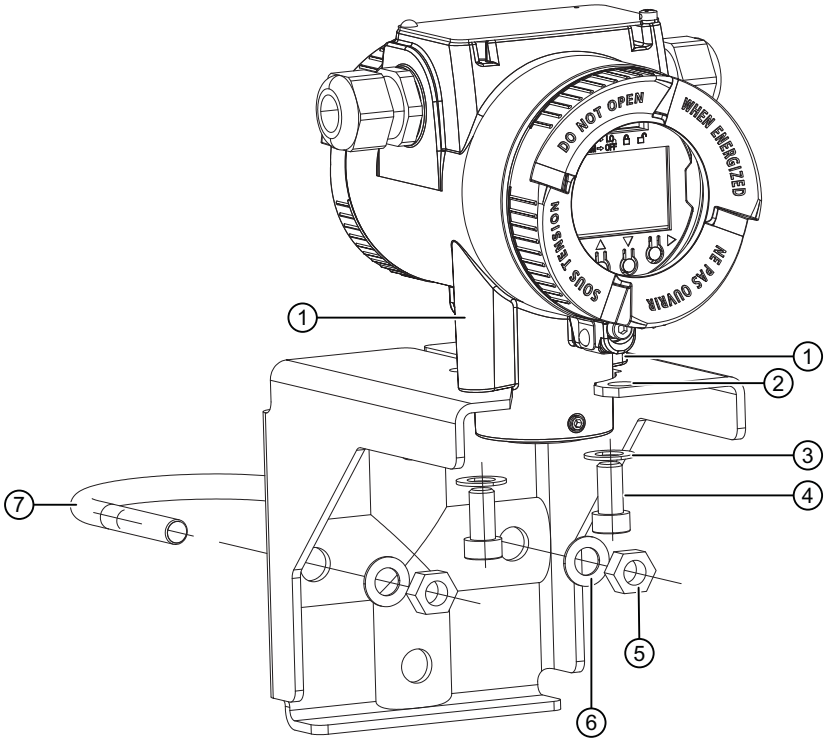

①	Mounting holes on the enclosure	⑤	Nut M8
②	Mounting holes in the mounting bracket (90° rotatable)	⑥	Washer DIN 125 - 8.4
③	Washer DIN 125 - 8.4	⑦	Pole clamp for mounting to pole
④	Fixing screws M8 or 5/16 UNF thread		

Figure 4-7 Mounting device to a pole with mounting bracket

1. Push the enclosure ① onto the mounting bracket ②.
2. Secure the enclosure ① with the fixing screws ④ and washers ③ onto the mounting bracket.
3. Secure the mounting bracket with pole clamp ⑦, washers ⑥ and nuts ⑤ on the pole.

4.6.2 Mounting device to the wall with mounting bracket

Introduction

The mounting holes in the bracket ② and the device enclosure ① determine the permitted mounting positions.

Procedure

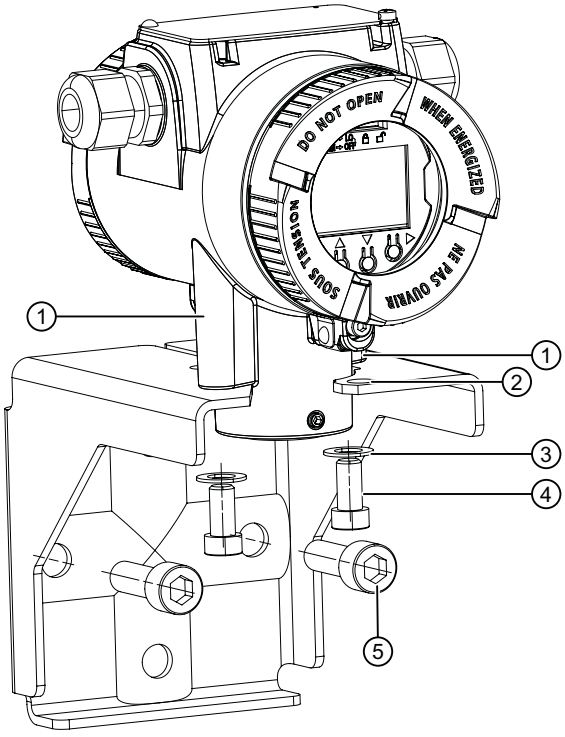

①	Mounting holes on the enclosure	④	Fixing screws M8 or 5/16 UNF thread
②	Mounting holes in the mounting bracket (90° rotatable)	⑤	Fixing screws
③	Washer DIN 125 - 8.4		

Figure 4-8 Mounting device to the wall with mounting bracket

1. Push the enclosure ① onto the mounting bracket ②.
2. Secure the enclosure ① with the fixing screws ④ and washers ③ onto the mounting bracket.
3. Secure the mounting bracket to the wall.
   Use suitable fixing screws ⑤.

4.7 Removing

WARNING

Incorrect disassembly

The following risks may result from incorrect disassembly:

- Injury through electric shock

- Risk through emerging media when connected to the process

- Risk of explosion in hazardous area

In order to disassemble correctly, observe the following:

- Before starting work, make sure that you have switched off all physical variables such as pressure, temperature, electricity etc. or that they have a harmless value.
- If the device contains hazardous media, it must be emptied prior to disassembly. Make sure that no environmentally hazardous media are released.
- Secure the remaining connections so that no damage can result if the process is started unintentionally.

Connecting 5

5.1 Basic safety notes

WARNING

Connecting or disconnecting in explosive environments

Connecting or disconnecting a powered device in explosive environments can lead to an explosion.

- Connect and disconnect in **non**-explosive environments.
  - or-
- Remove power to the device before connecting or disconnecting in explosive atmosphere.

WARNING

Loss of safety of device with type of protection "Intrinsic safety Ex i"

If the device or its components have already been operated in non-intrinsically safe circuits or the electrical specifications have not been observed, the safety of the device is no longer ensured for use in hazardous areas. There is a risk of explosion.

- Connect the device with type of protection "Intrinsic safety" solely to an intrinsically safe circuit.
- Observe the specifications for the electrical data on the certificate and/or in Technical data (Page 79).

WARNING

Incorrect selection of type of protection

Risk of explosion in areas subject to explosion hazard.

This device is approved for several types of protection.

1. Decide in favor of one type of protection.
2. Connect the device in accordance with the selected type of protection.
3. In order to avoid incorrect use at a later point, make the types of protection that are not used permanently unrecognizable on the nameplate.

WARNING

Unsuitable cables, cable glands and/or plugs

Risk of explosion in hazardous areas.

- Use only cable glands/plugs that comply with the requirements for the relevant type of protection.
- Tighten the cable glands in accordance with the torques specified in Technical data (Page 79).
- Close unused cable inlets for the electrical connections.
- When replacing cable glands, only use cable glands of the same type.
- After installation, check that the cables are seated firmly.

WARNING

Improper power supply

Risk of explosion in hazardous areas as result of incorrect power supply.

- Connect the device in accordance with the specified power supply and signal circuits. The relevant specifications can be found in the certificates, in Technical data (Page 79) or on the nameplate.

NOTICE

Ambient temperature too high

Damage to cable sheath.

- At an ambient temperature ≥ 60 °C (140 °F), use heat-resistant cables suitable for an ambient temperature at least 20 °C (36 °F) higher.

WARNING

Connecting device in energized state

Risk of explosion in hazardous areas.

- Connect devices in hazardous areas only in a de-energized state.

Exceptions:

- Devices having the type of protection "Intrinsic safety Ex i" may also be connected in energized state in hazardous areas.
- Exceptions for type of protection "Non-sparking nA/ec" (Zone 2) are regulated in the relevant certificate.

Note

Improvement of interference immunity

- Lay signal cables separate from cables with voltages > 60 V.
- Use cables with twisted wires.
- Keep device and cables at a distance from strong electromagnetic fields.
- Take account of the conditions for communication specified in the Technical data (Page 79).
- Use shielded cables to guarantee the full specification according to HART/PA/FF/Modbus/ EIA-485/Profibus DP.

5.2 Connecting the TH100

Requirement

If you use stranded wire used, you need a ferrule.

Note the maximum permissible core cross-section (Page 79).

Procedure

1. Connect the input or inputs to terminals 3 to 6.

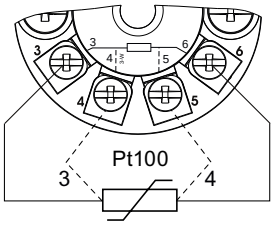

Figure 5-1 2-wire, 3-wire or 4-wire RTD

2. Connect the supply voltage to the terminals 1 (+) and 2 (-).
   Take the polarity into account. The device has reverse polarity protection.

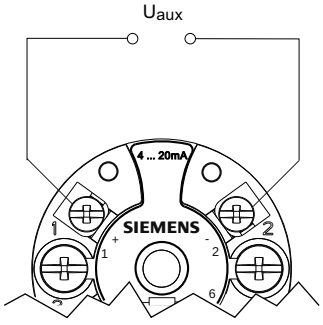

5.3 Connecting TH100 Slim

Procedure

1. Solder points 3 to 6 to the Pt100.

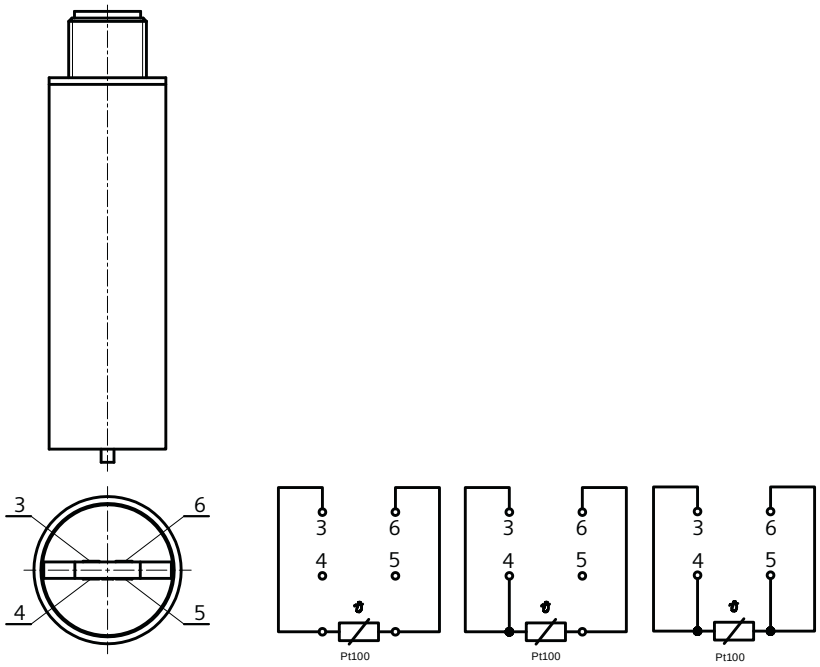

2. Connect the M12 device plug to SITRANS TH100 Slim.
   1 (+) and 2 (-)
   Take the polarity into account. The device has reverse polarity protection.

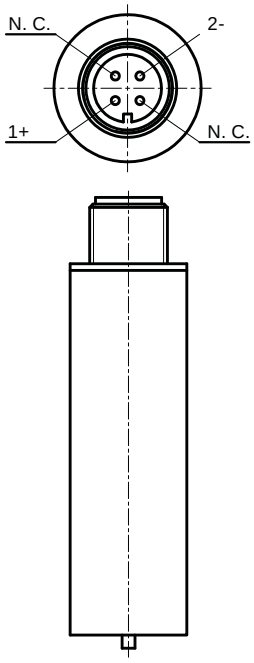

N. C. (not connected)	Points are not used.

5.4 Connecting TH320

Requirement

If you use stranded wire used, you need a ferrule.

Note the maximum permissible core cross-section (Page 81).

Procedure

1. Connect the input or inputs to terminals 3 to 6.

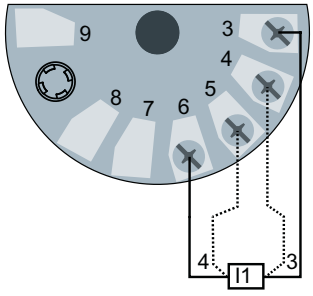	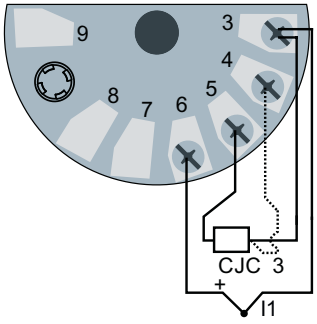	
2-wire, 3-wire or 4-wire RTD or linear resistance I1: Input 1	TC (internal CJC or external 2-wire or 3-wire CJC)	
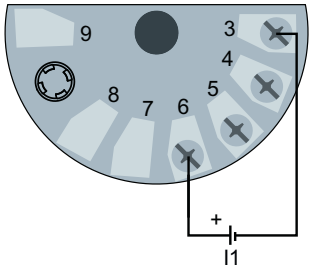	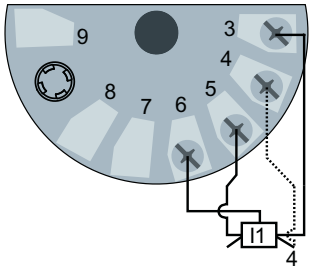	
Voltage input (unipolar and bipolar)	3-wire or 4-wire potentiometer	

2. Connect the supply voltage to the terminals 1 (+) and 2 (-).
   Take the polarity into account. The device has reverse polarity protection.

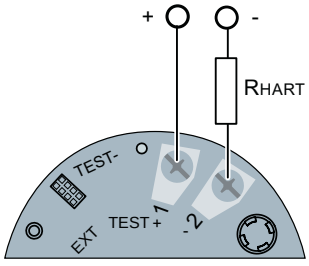

For devices with HART communication, connect a ≥ 250 Ω resistor.

5.5 Connecting TH420

Requirement

If you use stranded wire used, you need a ferrule.

Note the maximum permissible core cross-section (Page 81).

Procedure

1. Connect the input or inputs to terminals 3 to 9.

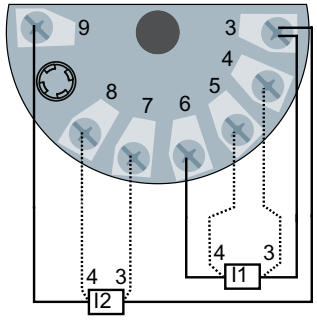	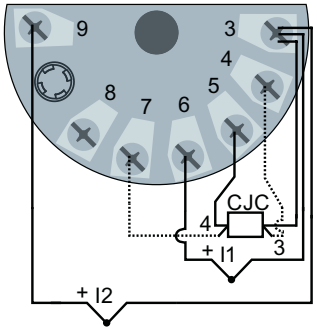	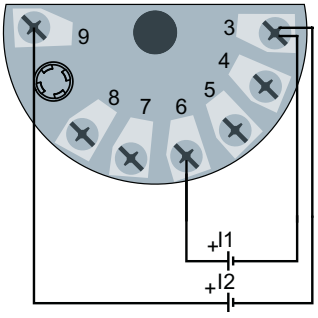
Input 1 (I1) and/or input 2 (I2): 2-wire, 3-wire or 4-wire RTD or linear resistance	Input 1 (I1) and/or input 2 (I2): TC (int. CJC or ext. 2-wire, 3-wire or 4-wire CJC)	Input 1 (I1) and/or input 2 (I2): voltage input (unipolar and bipolar)
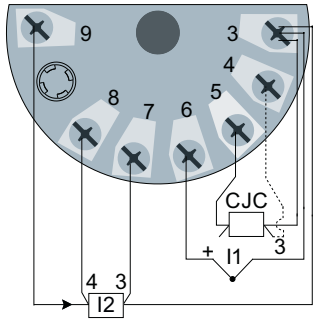	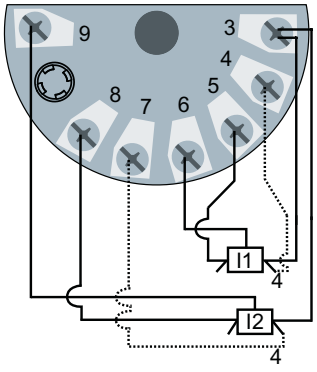	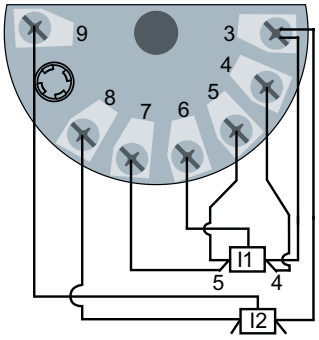
Input 1: TC (int. CJC or ext. 2-wire or 3-wire CJC) Input 2: 2-wire, 3-wire or 4-wire RTD	Input 1 (I1) and/or input 2 (I2): 3-wire or 4-wire potentiometer	Input 1 (I1): 5-wire potentiometer Input 2 (I2): 3-wire potentiometer

2. Connect the supply voltage to the terminals 1 (+) and 2 (-).
   Take the polarity into account. The device has reverse polarity protection.

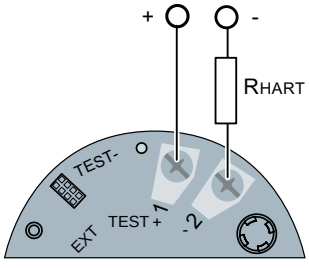

For devices with HART communication, connect a ≥ 250 Ω resistor.

5.6 Connecting TR320

Requirement

If you use stranded wire used, you need a ferrule.

Note the maximum permissible core cross-section (Page 81).

Procedure

1. Connect the input or inputs to terminals 5 to 8.
   The terminals are equipped with a coding profile to ensure intrinsic safety.

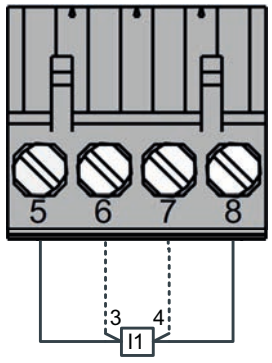	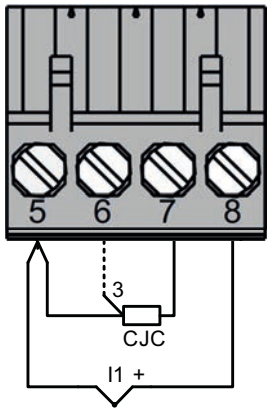	
2-wire, 3-wire or 4-wire RTD or wire resistance I1: Input 1	TC (internal CJC or external 2-wire or 3-wire CJC)	
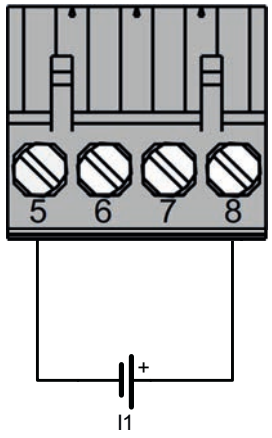	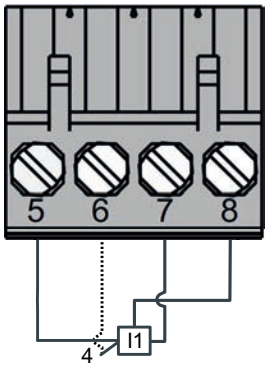	
Voltage input (unipolar and bi-polar)	3-wire or 4-wire potentiometer	

2. Connect the supply voltage to the terminals 3 (+) and 4 (-).

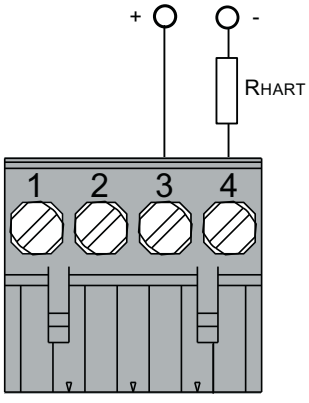

For devices with HART communication, connect a ≥ 250 Ω resistor.

3. Take the polarity into account. The device has reverse polarity protection.

5.7 Connecting TR420

Requirement

If you use stranded wire used, you need a ferrule.

Note the maximum permissible core cross-section (Page 81).

Procedure

1. Connect the input or inputs to terminals 5 to 12.
   The terminals are equipped with a coding profile to ensure intrinsic safety.

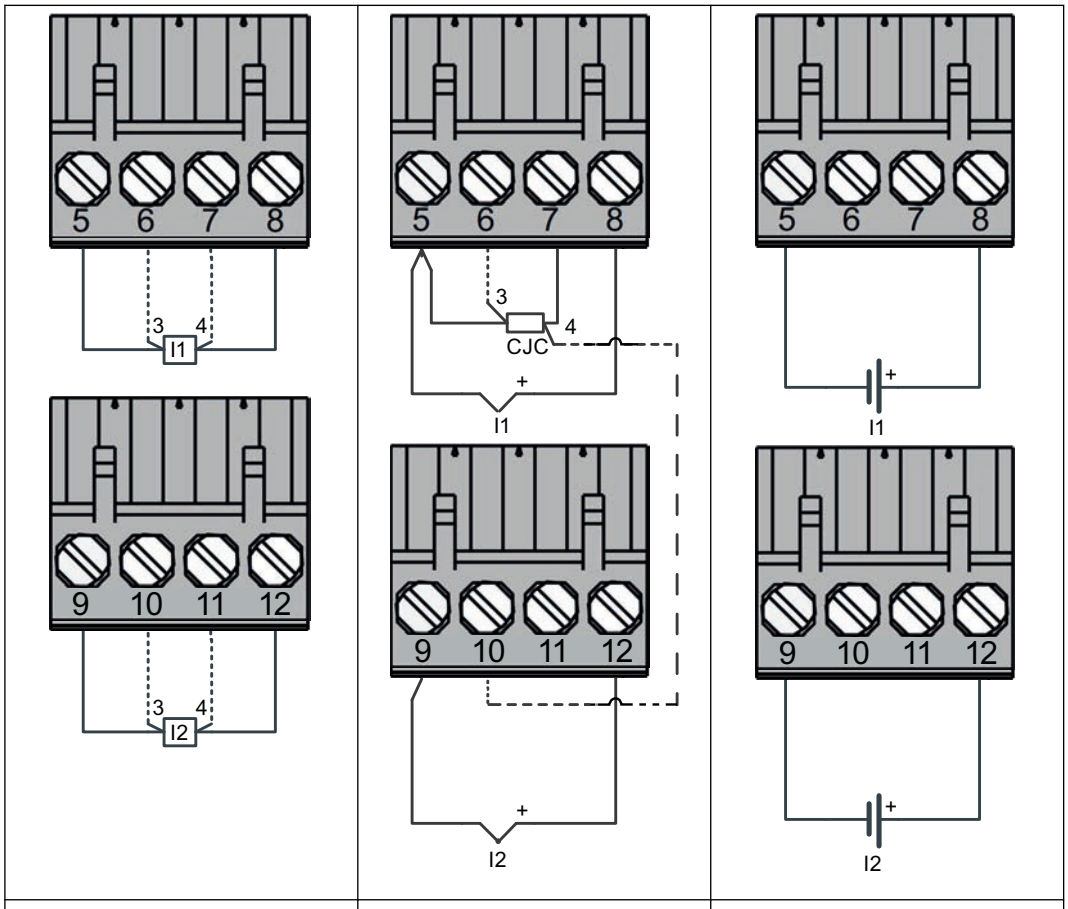

Input 1 (I1) and/or input 2 (I2): 2-wire, 3-wire or 4-wire RTD or linear resistance	Input 1 and/or input 2: TC (int. CJC or ext. 2-wire or 3-wire CJC)	Voltage input (unipolar and bipolar)

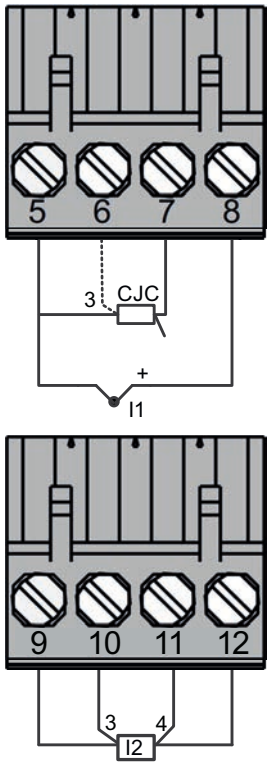	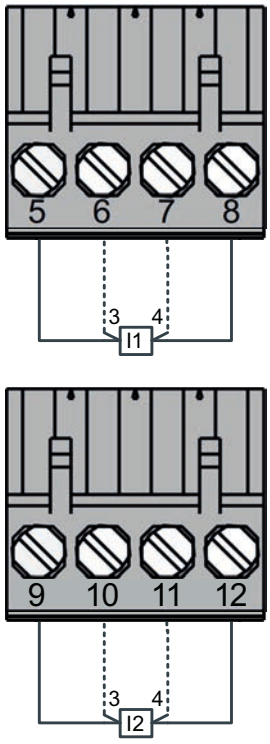	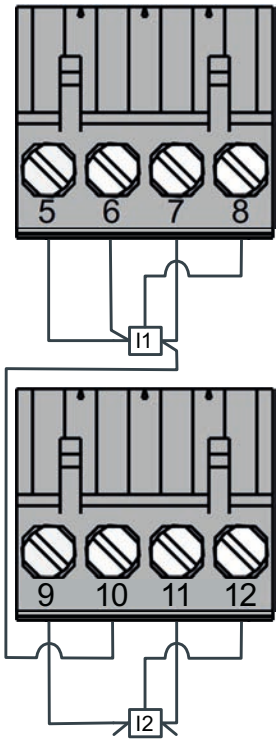
Input 1: TC (int. CJC or ext. 2-wire or 3-wire CJC) Input 2: 2-wire, 3-wire or 4-wire RTD	Input 1 (I1) and/or input 2 (I2): 3-wire or 4-wire potentiometer	Input 1 (I1): 5-wire potentiometer Input 2 (I2): 3-wire potentiometer

2. Connect the supply voltage to the terminals 3 (+) and 4 (-).

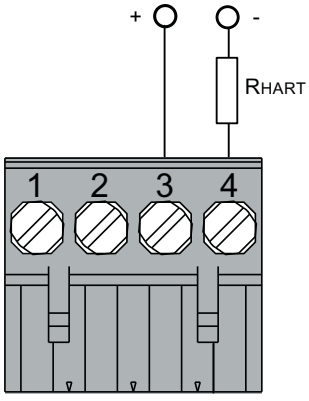

For devices with HART communication, connect a ≥ 250 Ω resistor.

3. Take the polarity into account. The device has reverse polarity protection.

5.8 Connecting the SITRANS TF single chamber housing

5.8.1 Opening the device

Procedure

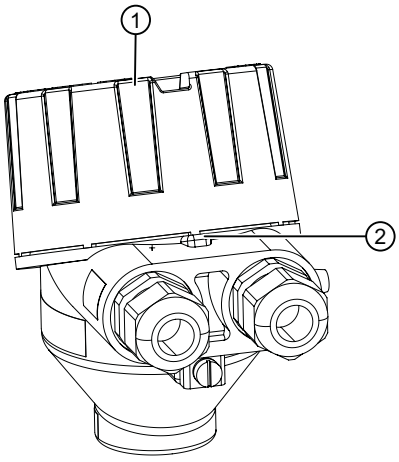

① Cover of the electrical cable compartment

② Safety catch

Figure 5-2 Opening device with single chamber housing

1. Use a 3 mm Allen key to loosen the safety catch ②.
2. Unscrew the cover of the electrical cable compartment ①.

5.8.2 Connecting the SITRANS TF320 single chamber housing

Condition

The device is opened. (Page 53)

If you use stranded wire used, you need a ferrule.

Note the maximum permissible core cross-section (Page 81).

Procedure

1. Remove the local display from the holder.

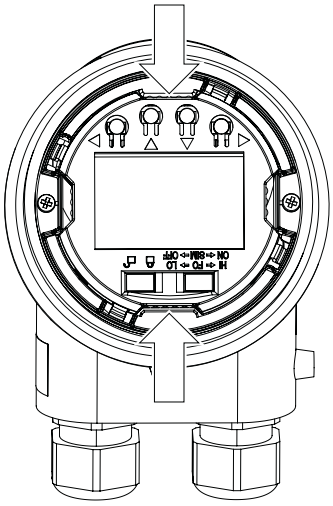

2. Loosen the fastening screws of the temperature transmitter ① and remove it.

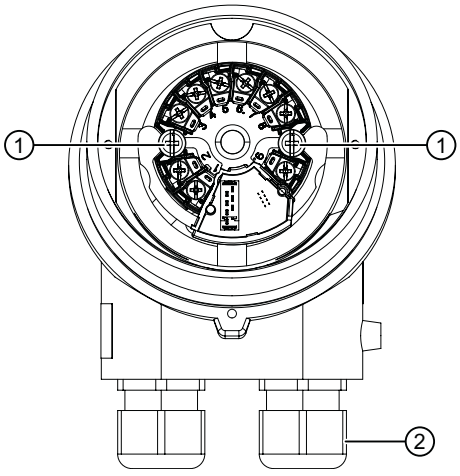

3. Increase the protection from high-frequency radiation through shielded connecting cables.
   – Lead the shielded connecting cables through the EMC cable glands ②.
     - or -
   – Connect the cable shield to the screw of the ground terminal ③.

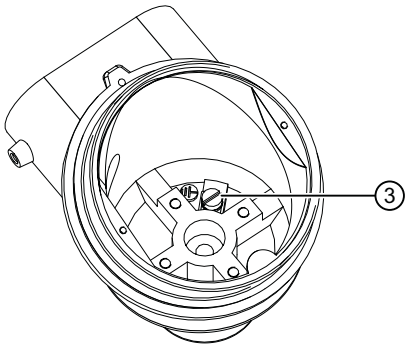

The screw of the ground terminal is electrically connected to the external protective conductor connection.

4. Connect the input terminals ④ and output terminals ⑤.
   Connecting TH320 (Page 45)

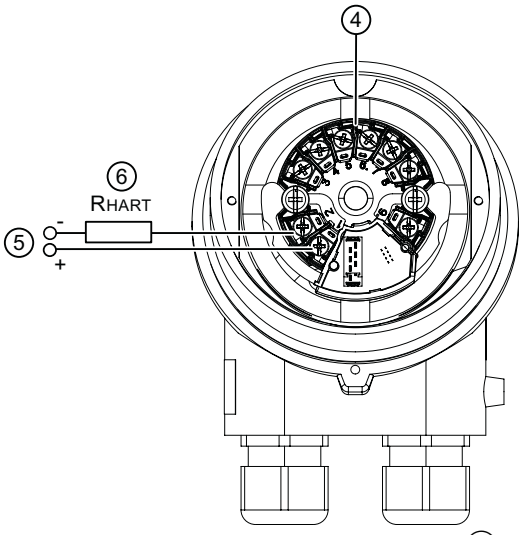

Figure 5-3 HART communication resistor ⑥ (optional)

5. Insert the temperature transmitter and screw it into place.
6. Insert the local display.

7. Close the device.
   Closing the device (Page 59)
8. Connect the device to the plant with the protective conductor connection ⑦.

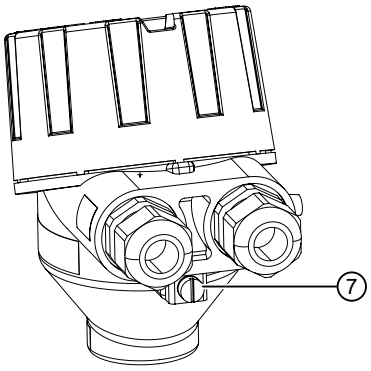

5.8.3 Connecting the SITRANS TF420 single chamber housing

Condition

The device is opened. (Page 53)

If you use stranded wire used, you need a ferrule.

Note the maximum permissible core cross-section (Page 81).

Procedure

1. Remove the local display from the holder.

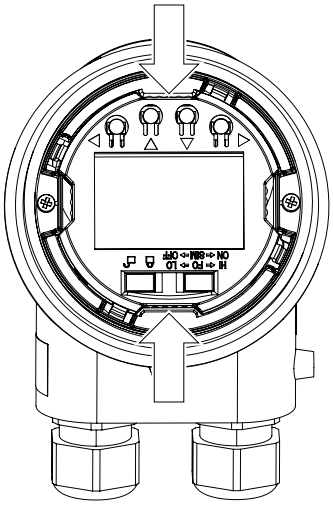

2. Loosen the fastening screws of the temperature transmitter ① and remove it.

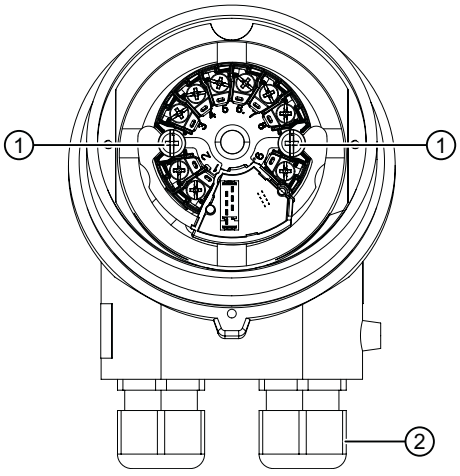

3. Increase the protection from high-frequency radiation through shielded connecting cables.
   – Lead the shielded connecting cables through the cable glands ②.
     - or -
   – Connect the cable shield to the screw of the ground terminal ③.

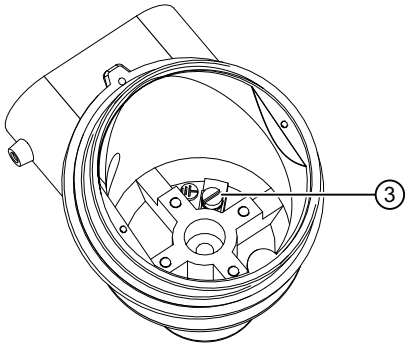

   The screw of the ground terminal is electrically connected to the external protective conductor connection.

4. Connect the input terminals ④ and output terminals ⑤.
   Connecting TH420 (Page 46)

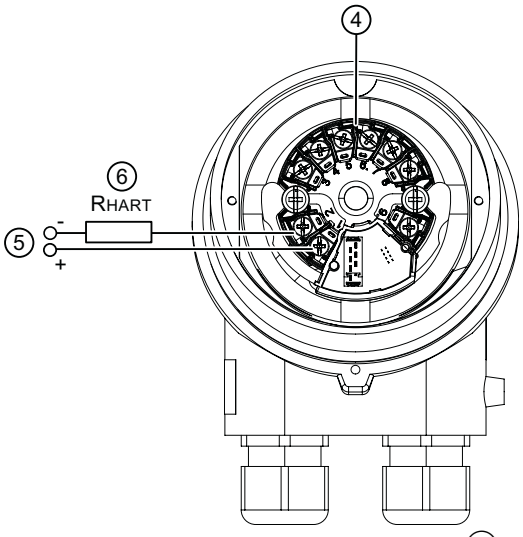

Figure 5-4 HART communication resistor ⑥ (optional)

5. Insert the temperature transmitter and screw it into place.
6. Insert the local display.

7. Close the device.
   Closing the device (Page 59)
8. Connect the device to the plant with the protective conductor connection ⑦.

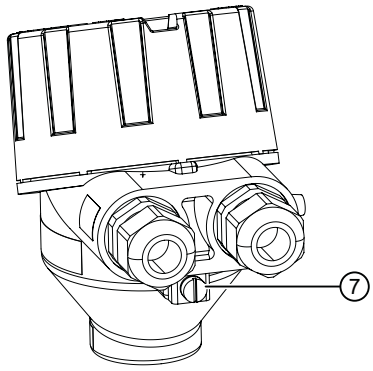

5.8.4 Closing the device

Procedure

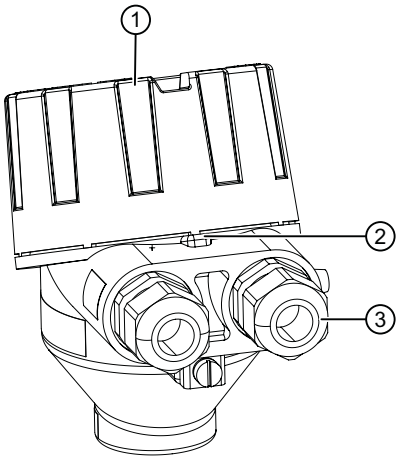

① Cover
② Safety catch
③ Cable gland

Figure 5-5 Closing device with single chamber housing

1. Screw the cover ① back on as far as it will go.
2. Use a 3 mm Allen key to secure the cover with the safety catch ②.
3. Check the tightness of the cable glands ③ in accordance with the degree of protection.

5.9 Connecting the SITRANS TF dual chamber housing

5.9.1 Opening the device

Procedure

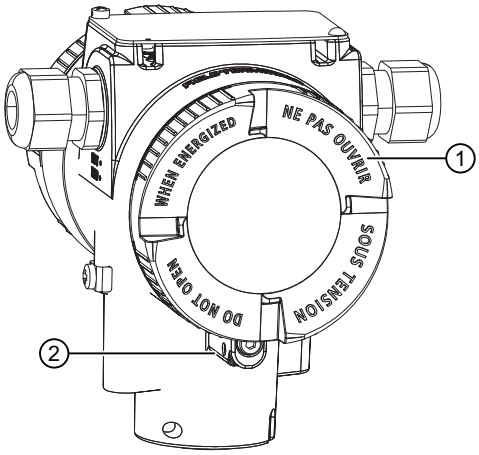

① Cover of the electrical cable compartment
② Safety catch (back)

Figure 5-6 Rear view of the device

1. Use a 3-mm Allen key to loosen the safety catch (rear) ② .
2. Unscrew the cover of the electrical cable compartment ①.

5.9.2 Connecting the SITRANS TF320 dual chamber housing

Requirement

The device is opened. (Page 60)

If you use stranded wire, you need a ferrule.

Note the maximum permissible core cross-section (Page 81).

Procedure

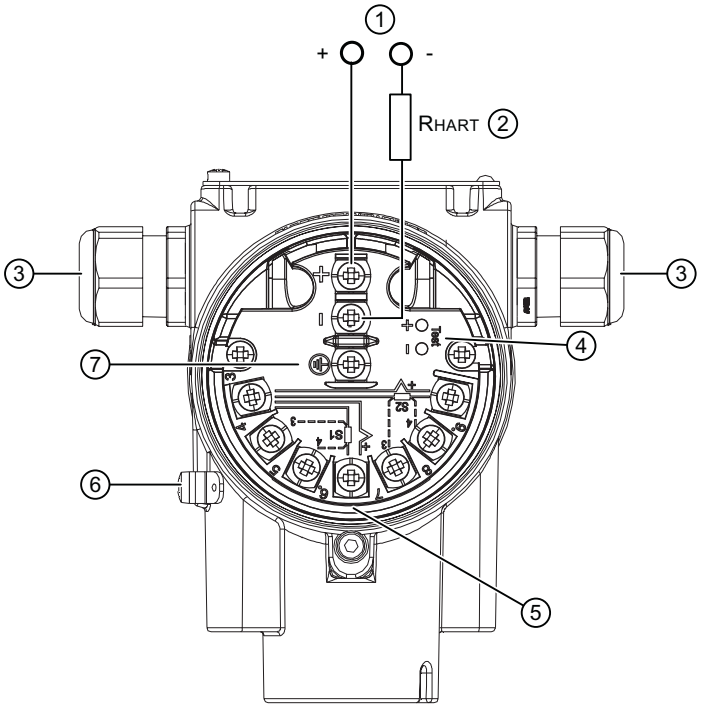

①	Supply voltage	⑤	Input terminals
②	HART communication resistor (optional)	⑥	Protective conductor connector
③	Cable gland	⑦	Ground terminal
④	Test terminals		

Figure 5-7 Connecting the device

1. Lead the shielded connecting cables through the cable glands ③.
2. Connect the device to the plant with the protective conductor connection ⑥.
3. Connect the wires of the power supply ① to the terminals (+) and (-).
   Take the polarity into account. The device has reverse polarity protection.
4. Connect the shield to the screw of the ground terminal ⑦.
   The screw of the ground terminal is electrically connected to the external protective conductor connection.
5. For devices with intrinsic safety type of protection, use an isolating power supply that corresponds to the requirements of the relevant type of protection.

6. Connect the input terminals ⑤.

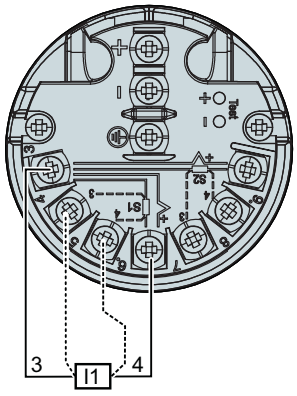	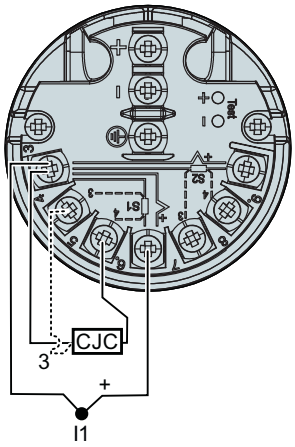	
2-wire, 3-wire or 4-wire RTD or linear resistance I1: Input 1	TC (internal CJC or external 2-wire or 3-wire CJC)	
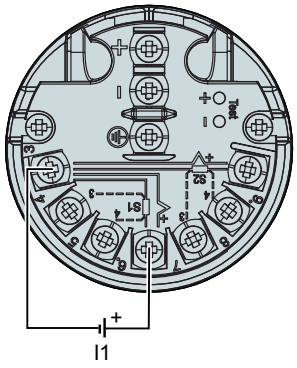	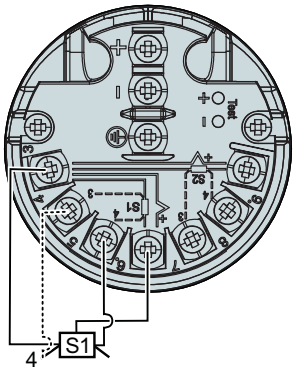	
Voltage input (unipolar or bipolar)	3-wire or 4-wire potentiometer	

7. Close the device.
   Closing the device (Page 65)

5.9.3 Connecting the SITRANS TF420 dual chamber housing

Requirement

The device is opened. (Page 60)

If you use stranded wire used, you need a ferrule.

Note the maximum permissible core cross-section (Page 81).

Procedure

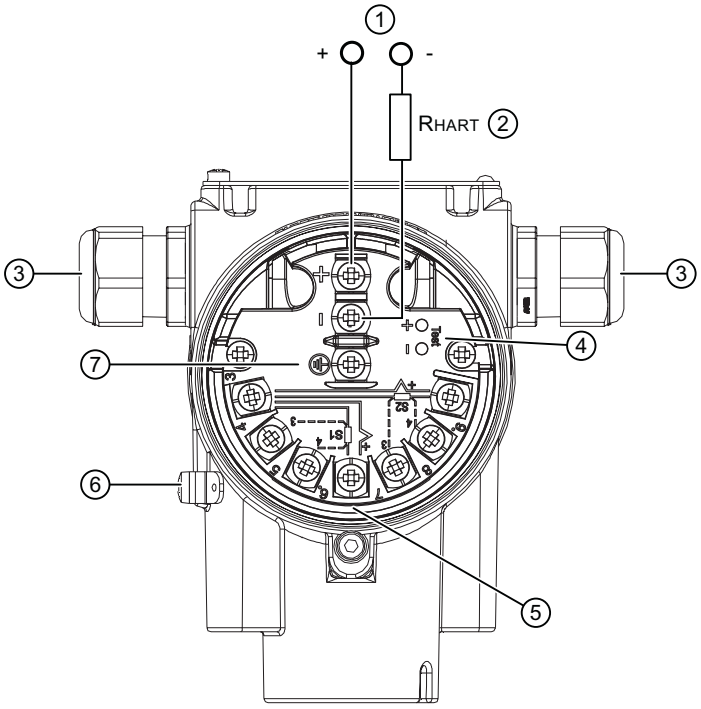

①	Supply voltage	⑤	Input terminals
②	HART communication resistor (optional)	⑥	Protective conductor connector
③	Cable gland	⑦	Ground terminal
④	Test terminals		

Figure 5-8 Connecting the device

1. Lead the shielded connecting cables through the cable glands ③.
2. Connect the device to the plant with the protective conductor connection ⑥.
3. Connect the wires of the power supply ① to the terminals (+) and (-).
   Take the polarity into account. The device has reverse polarity protection.
4. Connect the shield to the screw of the ground terminal ⑦.
   The screw of the ground terminal is electrically connected to the external protective conductor connection.
5. For devices with intrinsic safety type of protection, use an isolating power supply that corresponds to the requirements of the relevant type of protection.

6. Connect the input terminals ⑤.

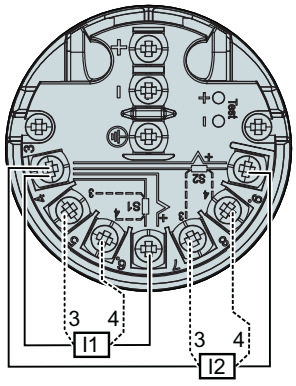	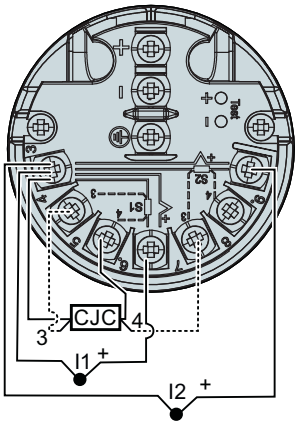	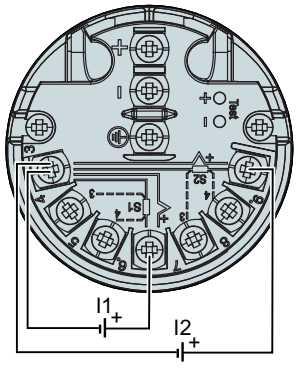
Input 1 (I1) and/or input 2 (I2): 2-wire, 3-wire or 4-wire RTD or linear resistance	Input 1 (I1) and/or input 2 (I2): TC (int. CJC or ext. 2-wire, 3-wire or 4-wire CJC)	Input 1 (I1) and/or input 2 (I2): Voltage input (unipolar or bipolar)
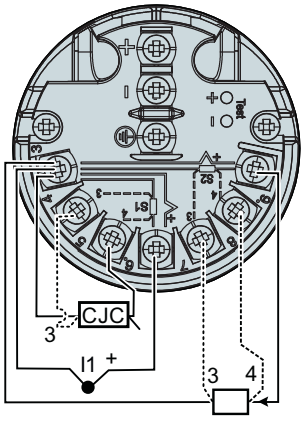	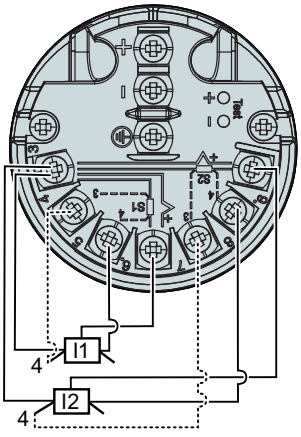	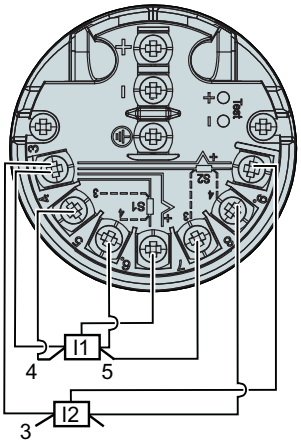
Input 1: TC (int. CJC or ext. 2-wire or 3-wire CJC) Input 2: 2-wire, 3-wire or 4-wire RTD	Input 1 (I1) and/or input 2 (I2): 3-wire or 4-wire potentiometer	Input 1 (I1): 5-wire potentiometer Input 2 (I2): 3-wire potentiometer

7. Close the device.
   Closing the device (Page 65)

5.9.4 Closing the device

Procedure

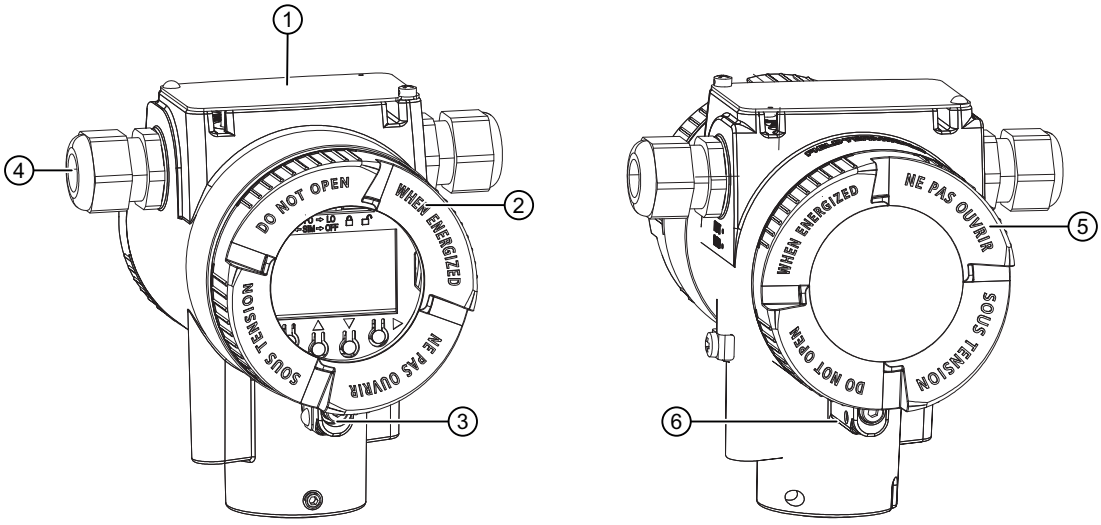

①	Cover over buttons	④	Cable gland
②	Cover (front)	⑤	Cover (back)
③	Safety catch (front)	⑥	Safety catch (back)

Figure 5-9 Closing the device

1. Screw on the covers ② and ⑥ as far as they will go.
2. Secure both covers with the safety catch ③ or ⑦.
3. Close the cover over the buttons①.
4. Tighten the screw for the cover over the buttons.
5. Check the tightness of the cable glands ④ in accordance with the degree of protection.

Commissioning 6

6.1 Basic safety notes

WARNING

Improper commissioning in hazardous areas

Device failure or risk of explosion in hazardous areas.

- Do not commission the device until it has been mounted completely and connected in accordance with the information in Technical data (Page 79).
- Before commissioning take the effect on other devices in the system into account.

WARNING

Commissioning and operation with pending error

If an error message appears, correct operation in the process is no longer guaranteed.

- Check the gravity of the error.
- Correct the error.
- If the error still exists:
  - Take the device out of operation.
  - Prevent renewed commissioning.

6.2 Switching on the supply voltage

Requirement

- You have connected the device correctly. (Page 41)
- The terminal voltage on the device is correct. (Page 79)

Procedure

Switch on the supply voltage.

- Product name and firmware version appear briefly on the display.
- The measured values are shown on the display.
  For a device without a display, you read off the current output as follows:
  - Over the remote control (e.g. SIMATIC PDM).
  - With a DC current measuring device.

6.3 Commissioning the SITRANS TH/TR with 4 ... 20 mA

Condition

Before you start, note the following safety notes:

- General safety notes (Page 21)
- Basic safety notes: Installing/mounting (Page 27)
- Basic safety notes: Connecting (Page 41)
- Basic safety notes: Commissioning (Page 67)

Read the entire device manual in order to achieve the optimum performance of the device.

Procedure

1. If you want to change the factory settings, configure the device using the USB modem and the SIPROM T parameter assignment software.
   – Read the operating instructions for information on this.
2. Install the device.
   Installing SITRANS TH100/320/420 in the base of the connection head (Page 31)
   Installing SITRANS TH100/320/420 in the raised cover of the connection head (Page 32)
   Mounting SITRANS TH100/320/420 on DIN rail and G rail (Page 33)
   Installing SITRANS TR on DIN rail (Page 34)
3. Connect the device.
   Connecting the TH100 (Page 43)
   Connecting TH100 Slim (Page 44)
   Connecting TH320 (Page 45)
   Connecting TH420 (Page 46)
   Connecting TR320 (Page 48)
   Connecting TR420 (Page 50)
4. For SITRANS TH100/320/420/TR devices with intrinsically safe protection type, use an isolating power supply that corresponds to the requirements of the relevant type of protection.
5. Switch on the power supply.
   Switching on the supply voltage (Page 67)
6. Wait for 2 seconds.
   After this startup time, the device is operational.
7. Wait 5 minutes to get exact measured values.

Result

The LED is lit green.

6.4 Commissioning SITRANS TH/TR with HART

Condition

Before you start, note the following safety notes:

- General safety notes (Page 21)
- Basic safety notes: Installing/mounting (Page 27)
- Basic safety notes: Connecting (Page 41)
- Basic safety notes: Commissioning (Page 67)

Read the entire device manual in order to achieve the optimum performance of the device.

Procedure

1. Install/mount the device.
   Installing SITRANS TH100/320/420 in the base of the connection head (Page 31)
   Mounting SITRANS TH100/320/420 on DIN rail and G rail (Page 33)
   Installing SITRANS TR on DIN rail (Page 34)
2. Connect the device.
   Connecting TH320 (Page 45)
   Connecting TH420 (Page 46)
   Connecting TR320 (Page 48)
   Connecting TR420 (Page 50)
3. For devices with intrinsically safe protection type, use an isolating power supply that corresponds to the requirements of the relevant type of protection.
4. Switch on the power supply.
   Switching on the supply voltage (Page 67)
5. Wait for 2 seconds.
   After this startup time, the device is operational.
6. Wait 5 minutes to get exact measured values.
7. If you want to change the factory settings, configure the device using remote operation.
   – Read the operating instructions for information on this.
8. Lock the device.
   – Read the operating instructions for information on this.

6.5 Commissioning SITRANS TF with 4 ... 20 mA

Condition

Before you start, note the following safety notes:

- General safety notes (Page 21)
- Basic safety notes: Installing/mounting (Page 27)
- Basic safety notes: Connecting (Page 41)
- Basic safety notes: Commissioning (Page 67)

Read the entire device manual in order to achieve the optimum performance of the device.

Procedure

1. Mount the device.
   Mounting the SITRANS TF single chamber housing (Page 35)
   Mounting the SITRANS TF dual chamber housing (Page 36)
2. Connect the device.
   Connecting the SITRANS TF single chamber housing (Page 53)
   Connecting the SITRANS TF dual chamber housing (Page 60)
3. For devices with intrinsically safe protection type, use an isolating power supply that corresponds to the requirements of the relevant type of protection.
4. Switch on the power supply.
   Switching on the supply voltage (Page 67)
5. Wait for 2 seconds.
   After this startup time, the device is operational.
6. Wait 5 minutes to get exact measured values.
7. If you want to change the factory settings, configure the device using the keys or the USB modem and the SIPROM T parameter assignment software.
   – Read the operating instructions for information on this.
8. Lock the device.
   – Read the operating instructions for information on this.

6.6 Commissioning SITRANS TF with HART

Condition

Before you start, note the following safety notes:

- General safety notes (Page 21)
- Basic safety notes: Installing/mounting (Page 27)

- Basic safety notes: Connecting (Page 41)
- Basic safety notes: Commissioning (Page 67)

Read the entire device manual in order to achieve the optimum performance of the device.

Procedure

1. Mount the device.
   Mounting the SITRANS TF single chamber housing (Page 35)
   Mounting the SITRANS TF dual chamber housing (Page 36)
2. Connect the device.
   Connecting the SITRANS TF single chamber housing (Page 53)
   Connecting the SITRANS TF dual chamber housing (Page 60)
3. For devices with intrinsically safe protection type, use an isolating power supply that corresponds to the requirements of the relevant type of protection.
4. Switch on the power supply.
   Switching on the supply voltage (Page 67)
5. Wait for 10 seconds.
   After this startup time, the device is operational.
6. Wait 5 minutes to get exact measured values.
7. If you want to change the factory settings, configure the device using remote operation.
   – Read the operating instructions for information on this.
8. Lock the device.
   – Read the operating instructions for information on this.

Service and maintenance

7

7.1 Basic safety notes

Note

The device is maintenance-free.

7.1.1 Maintenance

The device is maintenance-free. However, a periodic inspection according to pertinent directives and regulations must be carried out.

An inspection can include, for example, check of:

- Ambient conditions
- Seal integrity of the process connections, cable entries, and cover
- Reliability of power supply, lightning protection, and grounds

7.1.2 SITRANS TF

WARNING

Use of a computer in a hazardous area

If the interface to the computer is used in the hazardous area, there is a risk of explosion.

- Ensure that the atmosphere is explosion-free (hot work permit).

WARNING

Dust layers above 5 mm

Risk of explosion in hazardous areas.

Device may overheat due to dust build up.

- Remove dust layers in excess of 5 mm.

CAUTION

Releasing button lock

Improper modification of parameters could influence process safety.

- Make sure that only authorized personnel may cancel the button locking of devices for safety-related applications.

NOTICE

Penetration of moisture into the device

Damage to device.

- Make sure when carrying out cleaning and maintenance work that no moisture penetrates the inside of the device.

7.2 Cleaning

Cleaning the enclosure

- Clean the outside of the enclosure with the inscriptions and the display window using a cloth moistened with water or a mild detergent.
- Do not use any aggressive cleansing agents or solvents, e.g. acetone. Plastic parts or the painted surface could be damaged. The inscriptions could become unreadable.

See also

Cleaning (Page 74)

WARNING

Electrostatic charge

Risk of explosion in hazardous areas if electrostatic charges develop, for example, when cleaning plastic surfaces with a dry cloth.

- Prevent electrostatic charging in hazardous areas.

7.3 Maintenance and repair work

WARNING

Impermissible repair and maintenance of the device

- Repair and maintenance must be carried out by Siemens authorized personnel only.

WARNING

Impermissible repair of explosion protected devices

Risk of explosion in hazardous areas

- Repair must be carried out by Siemens authorized personnel only.

WARNING

Impermissible accessories and spare parts

Risk of explosion in areas subject to explosion hazard.

- Only use original accessories or original spare parts.
- Observe all relevant installation and safety instructions described in the instructions for the device or enclosed with the accessory or spare part.

WARNING

Improper connection after maintenance

Risk of explosion in areas subject to explosion hazard.

- Connect the device correctly after maintenance.
- Close the device after maintenance work.

Refer to Connecting (Page 41).

7.3.1 SITRANS TF

WARNING

Impermissible repair and maintenance of the device

- Repair and maintenance must be carried out by Siemens authorized personnel only.

WARNING

Impermissible repair of explosion protected devices

Risk of explosion in hazardous areas.

- Repairs may only be carried out by personnel authorized by Siemens.
- Do not repair flameproof joints. Flameproof joints are, for example, threaded inlets for cable glands.

CAUTION

Hot surfaces

Risk of burns during maintenance work on parts having surface temperatures exceeding 70 °C (158 °F).

- Take corresponding protective measures, for example by wearing protective gloves.
- After carrying out maintenance, remount touch protection measures.

7.3.1.1 Checking the seals

Inspect the seals at regular intervals

1. Clean the enclosure and seals.
2. Check the enclosure and the seals for cracks and damage.
3. If necessary, lubricate the seals or replace them. Use only original seals (https://www.siemens.com/industrymall).

7.3.1.2 Check cable glands

- Check the tightness of the cable glands at regular intervals.
- Tighten the cable glands if necessary.

7.4 Absence of pollutants

The product does not contain any dangerous substances above the concentration value according to GB/T 26572.

7.5 Return procedure

Enclose the bill of lading, return document and decontamination certificate in a clear plastic pouch and attach it firmly to the outside of the packaging.

Required forms

- Delivery note
- Return document (http://www.siemens.com/processinstrumentation/returngoodsnote) with the following information:
  - Product (item description)
  - Number of returned devices/replacement parts
  - Reason for returning the item(s)
- Decontamination declaration (http://www.siemens.com/sc/declarationofdecontamination) With this declaration you warrant "that the device/replacement part has been carefully cleaned and is free of residues. The device/replacement part does not pose a hazard for humans and the environment."
  If the returned device/replacement part has come into contact with poisonous, corrosive, flammable or water-contaminating substances, you must thoroughly clean and decontaminate the device/replacement part before returning it in order to ensure that all hollow areas are free from hazardous substances. Check the item after it has been cleaned. Any devices/replacement parts returned without a decontamination declaration will be cleaned at your expense before further processing.

7.6 Disposal

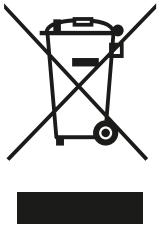

Devices described in this manual should be recycled. They may not be disposed of in the municipal waste disposal services according to the Directive 2012/19/EC on waste electronic and electrical equipment (WEEE).

Devices can be returned to the supplier within the EC, or to a locally approved disposal service for eco-friendly recycling. Observe the specific regulations valid in your country.

Further information about devices containing batteries can be found at: Information on battery/product return (WEEE) (https://support.industry.siemens.com/cs/document/109479891/)

Note

Special disposal required

The device includes components that require special disposal.

- Dispose of the device properly and environmentally through a local waste disposal contractor.

Technical data

8

8.1 SITRANS TH100/TH100 slim

8.1.1 General specifications

Rated conditions	SITRANS TH100/TH100 Slim
Ambient temperature	-40 ... +85 °C (-40 ... +185 °F)
Storage temperature	-40 ... +85 °C (-40 ... +185 °F)
Relative humidity	≤ 98%, condensing
Electromagnetic compatibility	As per EN 61326 and NAMUR NE21
Errors with EMC influences	
• ESD in accordance with EN 61000-4-2	< 0.10% of measuring span
• HF radiation according to EN 61000-4-3	< 0.8% of measuring range 0 ... 100 °C
• Burst in accordance with EN 61000-4-4	< 0.1% of measuring range 0 ... 100 °C
• HF energizing according to EN 61000-4-6	< 0.9% of measuring range 0 ... 100 °C

Construction	SITRANS TH100	SITRANS TH100 Slim
Core cross-section	Max. 2.5 mm^2 (AWG 13)	M12 device plug
Weight	50 g	42 g
Material	Molded plastic	316L stainless steel
Degree of protection	In accordance with IEC 60529	-
• Housing	IP40	IP67
• Terminals	IP00	-
Tightening torque for screw terminals	0.4 Nm	-

8.1.2 Certificates and approvals

Only the technical specifications listed in the certificates (http://www.siemens.com/processinstrumentation/certificates) apply to applications in hazardous atmospheres.

Certificates and approvals	SITRANS TH100
ATEX (Europe) DEKRA 21ATEX0033X DEKRA 21ATEX0034X	
Type of explosion protection "Intrinsically safe, gas (Ex i IIIC)"	II 1 G Ex ia IIC T6...T4 Ga II 2 (1) G Ex ib [ia Ga] IIC T6...T4 Gb II 3 G Ex ic IIC T6...T4 Gc II 3 G Ex ec IIC T6...T4 Gc
Type of explosion protection "Increased safety (Ex ec)"	II 3 G Ex ec IIC T6...T4 Gc II 3 G Ex ec[ic] IIC T6...T4 Gc
Type of explosion protection "Intrinsically safe, dust (Ex i IIIC)"	II 2 D Ex ia IIIC Db
FM (USA) FM 3024169	IS Cl I, II, III, Div 1, GP ABCDEFG T4/T5/T6 Cl I, ZN 0 AEx ia IIC T4/T5/T6 NI, S Cl I, II, III, Div 2, GP ABCDFG T4/T5/T6 NI IIC T4/T5/T6
FM (Canada) FM 3024169C	IS Cl I, II, III, Div 1, GP ABCDEFG T4/T5/T6 Cl I, ZN 0 Ex ia IIC T4/T5/T6 NI, S Cl I, II, III, Div 2, GP ABCDFG T4/T5/T6 NI IIC T4/T5/T6

8.2 SITRANS TH320/TH420/TR320/TR420/TF320/TF420

8.2.1 Operating conditions

Operating conditions	SITRANS TH320/420	SITRANS TR	SITRANS TF
Ambient temperature	-50 ... +85 °C (-58 ... +185 °F) SITRANS TF dual chamber housing: -40 ... +85 °C (-40 ... +185 °F)		
Ambient temperature for devices with local display			-40 ... +85 °C (-40 ... +185 °F)
Ambient temperature for devices with functional security	-40 ... +80 °C (-40 ... +176 °F)		
Storage temperature	-50 ... +85 °C (-58 ... +185 °F) SITRANS TF dual chamber housing and SITRANS TF dual chamber housing with display: -40 ... +85 °C (-40 ... +185 °F) SITRANS TF single chamber enclosure with display: -40 ... +85 °C (-40 ... +185 °F)		

Operating conditions	SITRANS TH320/420	SITRANS TR	SITRANS TF
Reference temperature for sensor calibration	+24 °C (77 °F) ±1.0 °C (33.8 °F)		
Relative humidity	< 99% relative humidity (no condensation)		
Degree of protection			
• Transmitter enclosure	IP68	IP20	IP66/IP67/IP68
• Terminals	IP00	IP20	IP00

8.2.2 Construction

Mechanical specifications	SITRANS TH320/420	SITRANS TR	SITRANS TF
Weight	50 g	122 g (0.27 lb)	Single chamber housing: 0.85 kg Dual chamber housing: Aluminum: 1.3 kg, stainless steel: 3.3 kg
Maximum core cross-section	1 x 1.5 mm² (AWG 16)	2.5 mm² (AWG 14)	Single chamber housing: 1.5 mm² (AWG 16) Dual chamber housing: 2.5 mm² (AWG 14)
Tightening torque for screw terminals	0.4 Nm	0.5 ... 0.6 Nm	
Vibration	IEC 60068-2-6		
2 Hz to 25 Hz	1.6 mm		
25 Hz to 100 Hz	4 g		

8.2.3 General specifications

General specifications	SITRANS TH320/420/TR	SITRANS TF	
Supply voltage	7.5[1] ... 48[2] V DC 7.5[1] ... 30[2] V DC (Ex i)	Single chamber housing	Dual chamber housing
		Without display: 7.5 ... 48 V DC 7.5 ... 30 V DC (Ex i) With display: 10 ... 48 V DC 10 ... 30 V DC (Ex i)	Without display: 8.2 ... 48 V DC 8.2 ... 30 V DC (Ex i) With display: 10.7 ... 48 V DC 10.7 ... 30 V DC (Ex i)
Maximum power loss	≤ 850 mW		
Minimum load resistance at supply voltage > 37 V insulation voltage, test/operation	(Supply voltage – 37 V) / 23 mA		

General specifications	SITRANS TH320/420/TR	SITRANS TF
Insulation voltage, test/operation		2.5 kVAC / 55 V AC 2.5 kVAC / 42 V AC(Ex i)
Polarity protection		All inputs and outputs
Write protection		Jumper or software
Warming-up time		< 5 min.
Starting time		< 2.75 s
Programming		SIPROM T or HART
Signal-to-noise ratio		> 60 dB
Long-term stability, better than		± 0.05% of measuring span/year ± 0.18% of measuring span/5 years
Response time		
• 4 to 20 mA		≤ 55 ms
• HART		≤ 75 ms (typically 70 ms)
Damping		0 ... 60 s
Signal dynamic, input		24 bit
Signal dynamic, output		18 bit
Influence of changes in supply voltage		< 0.005% of measuring span/V DC

1) Note that the minimum supply voltage must correspond to the value measured at the terminals of the SITRANS TH320/TH420 and that all external voltage drops must be taken into consideration.

2) Protect the device from overvoltage with the help of a suitable supply voltage or suitable overvoltage protection equipment.

8.2.4 Certificates and approvals

8.2.4.1 ATEX/IECEx and others

Certificate numbers

Only the technical specifications listed in the certificates (http://www.siemens.com/processinstrumentation/certificates) apply to applications in hazardous atmospheres.

ATEX/IECEx and others	SITRANS TH320/420/TR	SITRANS TF	Display
Certificate numbers			
	DEKRA 17 ATEX 0116 X	DEKRA 19ATEX0106X A5E50642461A-2021X	DEKRA 19ATEX0105 X
	A5E43700604A-2018X	DEKRA 19ATEX0107X DEKRA 19ATEX0108X	A5E50485541A-2020X
	IECEx DEK 17.0054X	IECEx DEK 19.0069X IECEx DEK 19.0070X	IECEx DEK19.0068X

ATEX/IECEx and others	SITRANS TH320/420/TR	SITRANS TF	Display
ГОСТ 31610.0-2014 (IEC 60079-0:2011) ГОСТ 31610.11-2014 (IEC 60079-11:2011) ГОСТ 31610.15-2014/IEC 60079-15:2010	№ ТС RU C–DE.AA87.B.01162 ОС НАНИО «ЦСВЭ»	№ ЕАЭС RU C-DE.xxxx.x.xxxxx/xx ОС ВСИ «ВНИИФТРИ»	№ ЕАЭС RU C-DE.ВН02.В.00587/20 ОС ВСИ «ВНИИФТРИ»
ABNT NBR IEC60079-0 ERRATA 2:2016 ABNT NBR IEC60079-1:2016 ABNT NBR IEC60079-31:2014	-	DEK xx.00xxX	-
ГОСТ 31610.0-2014 (IEC 60079-0:2011) ГОСТ 31610.1.1-2012 (IEC 60079-1:2002) ГОСТ xxxxx.xx-xxxx/IEC 60079-31:2013	-	№ ЕАЭС RU C-DE.xxxx.x.xxxxx/xx ОС ВСИ «ВНИИФТРИ»	-
DEKRA 19ATEX0106X	-	II 1 G Ex ia IIC T6 ... T4 Ga and/or II 2 (1) G Ex ib [ia Ga] IIC T6 ... T4 Gb and/or II 2 (1) D Ex ib [ia Da] IIIC T100 °C Db	-
DEKRA 19ATEX0107X	-	II 3 G Ex ec IIC T6 ... T4 Gc and/or II 3 G Ex ic IIC T6 ... T4 Gc and/or II 3 G Ex nA IIC T6 ... T4 Gc and/or II 3 D Ex ic IIIC T100 °C Dc	-
DEKRA 19ATEX0108X	-	II 2 G Ex db IIC T6 ... T4 Gb II 2 D Ex tb IIIC T100 °C Db	-
IECEx DEK 19.0069X	-	Ex ia IIC T6 ... T4 Ga Ex ib [ia Ga] IIC T6 ... T4 Gb Ex ib [ia Da] IIIC T 100 °C Db Ex ec IIC T6 ... T4 Gc Ex ic IIIC T100 °C Dc Ex nA IIC T6 ... T4 Gc	-
IECEx DEK 19.0070X	-	Ex db IIC T6 ... T4 Gb Ex tb III T100 °C Db Ex tc IIIC T100 °C Dc	-
A5E50642461A-2021X	-	II 3 D Ex tc IIIC T100 °C Dc	-

"Intrinsic safety ia/ib" type of protection

ATEX/IECEx and others	SITRANS TH320/420/TR	SITRANS TF	Display
• "Intrinsic safety ia/ib" type of protection	Zones 0, 1, 2, 20, 21, 22 and M1		
Name • ATEX	II 1 G Ex ia IIC T6 ... T4 Ga II 2(1) G Ex ib [ia Ga] IIC T6 ... T4 Gb II 1 D Ex ia IIIC Da I M1 Ex ia I Ma	II 1 G Ex ia IIC T6 ... T4 Ga II 2 (1) G Ex ib [ia Ga] IIC T6 ... T 4 Gb II 2 (1) D Ex ib [ia Da] II-IC T100 °C Db	II 1 G Ex ia IIC Ga
• IECEx and others	Ex ia IIC T6 ... T4 Ga Ex ib [ia Ga] IIC T6 ... T4 Gb Ex ia IIIC Da Ex ia I Ma	Ex ia IIC T6 ... T4 Ga Ex ib [ia Ga] IIC T6 ... T4 Gb Ex ib [ia Da] IIIC T100 °C Db	Ex ia IIC Ga
• EACEx	0Ex ia IIC T6 ... T4 Ga X 1Ex ib [ia Ga] IIC T6 ... T4 Gb X Ex ia IIIC T70 °C to T105 °C Da X PO Ex ia I Ma X	0Ex ia IIC T6 ... T4 Ga X 1Ex ib [ia Ga] IIC T6 ... T4 Gb X Ex ib [ia Da] IIIC T100°C Db X	Ex ia IIC Ga U
Output terminals SITRANS TH/ SITRANS TF single chamber housing: 1, 2 SITRANS TR: 3, 4 SITRANS TF dual chamber housing: (+) and (-)	**U_i = 30 V DC**, I_i = 120 mA, L_i = 0 µH, C_i = 1.0 nF	U_i = 30 V DC, I_i = 120 mA, L_i = 0 µH, C_i = 2.2 nF	U_i = 30 V DC, I_i = 120 mA, L_i = 0 µH, C_i = 2.2 nF
• Permissible ambient temperature **P_i = 900 mW**	-50 °C to +85 °C (-58 °F to +185 °F) temperature class T4 -50 °C to +65 °C (-58 °F to +149 °F) temperature class T5 -50 °C to +50 °C (-58 °F to +122 °F) temperature class T6	-50 ... +75 °C (-58 ... +167 °F) T4[1)] -50 ... +40 °C (-58 ... +104 °F) T6[1)]	-40 ... +85 °C (-40 ... +185 °F) Temperature class T4 -40 ... +50 °C (-40 ... +122 °F) Temperature class T6
• Permissible ambient temperature **P_i = 750 mW**	-50 °C to +85 °C (-58 °F to +185 °F) temperature class T4 -50 °C to +70 °C (-58 °F to +158 °F) temperature class T5 -50 °C to +55 °C (-58 °F to +131 °F) temperature class T6	-50 ... +75 °C (-58 ... +167 °F) Temperature class T4[1)] -50 ... +45 °C (-58 ... +113 °F) Temperature class T6[1)]	-40 ... +85 °C (-40 ... +185 °F) Temperature class T4 -40 ... +55 °C (-40 ... +131 °F) Temperature class T6
• Permissible ambient temperature **P_i = 610 mW**	-50 °C to +85 °C (-58 °F to +185 °F) temperature class T4 -50 °C to +75 °C (-58 °F to +167 °F) temperature class T5 -50 °C to +60 °C (-58 °F to +140 °F) temperature class T6	-50 ... +75 °C (-58 ... +167 °F) Temperature class T4[1)] -50 ... +50 °C (-58 ... +122 °F) Temperature class T6[1)]	-40 ... +85 °C (-40 ... +185 °F) Temperature class T4 -40 ... +60 °C (-40 ... +140 °F) Temperature class T6

ATEX/IECEx and others	SITRANS TH320/420/TR	SITRANS TF	Display
Input terminals SITRANS TH/TF: 3, 4, 5, 6, 7, 8, 9 SITRANS TR: 5, 6, 7, 8, 9, 10, 11, 12	**TH320/420/TR/TF320** U_o = 7.2 V DC, I_o = 12.9 mA, P_o = 23.3 mW, L_o = 200 mH, C_o = 13.5 µF **TH320/420/TR/TF420** (input 1 or 2) U_o = 7.2 V DC, I_o = 7.3 mA, P_o = 13.2 mW, L_o = 667 mH, C_o = 13.5 µF		-

1) A SITRANS TF display or a SITRANS TF in a dual chamber housing has the minimum permissible ambient temperature of -40 °C.

"Intrinsic safety ic" type of protection

ATEX/IECEx and others	SITRANS TH320/420/TR	SITRANS TF	Display
• "Intrinsic safety ic" type of protection	Zones 2 and 22		
Name • ATEX	II 3 G Ex ic IIC T6 ... T4 Gc II 3 D Ex ic IIIC Dc	II 3 G Ex ic IIC T6 ... T4 Gc II 3 D Ex ic IIIC T100 °C Dc	II 3 G Ex ic IIC Gc
• IECEx	Ex ic IIC T6 ... T4 Gc Ex ic IIIC Dc	Ex ic IIC T6 ... T4 Gc Ex ic IIIC T100 °C Dc	Ex ic IIC Gc
• EACEx	2Ex ic IIC T6 ... T4 Gc X Ex ic IIIC T70 °C to T105 °C Dc X	2Ex ic IIC T6 ... T4 Gc X Ex ic IIIC T100°C Dc X	Ex ic IIC Gc U
Output terminals SITRANS TH/ SITRANS TF single chamber housing: 1, 2 SITRANS TR: 3, 4 SITRANS TF dual chamber housing: (+) and (-)	**U_i = DC 37 V**, L_i = 0 µH, C_i = 1.0 nF For U_i = DC 48 V, P_i = 851 mW, L_i = 0 µH, C_i = 1.0 nF	U_i = 37 V DC, P_i = 851 mW, L_i = 0 µH, C_i = 2.2 nF For U_i = 48 V DC, P_i = 851 mW, L_i = 0 µH, C_i = 2.2 nF SITRANS TF with local display: U_i = 37 V DC, P_i = 851 mW	U_i = 37 V DC, L_i = 120 mA, L_i = 0 µH, C_i = 2.2 nF
• Permissible ambient temperature	-50 °C to +85 °C (-58 °F to +185 °F) temperature class T4 -50 °C to +70 °C (-58 °F to +158 °F) temperature class T5 -50 °C to +55 °C (-58 °F to +131 °F) temperature class T6	-50 ... +75 °C (-58 ... +167 °F) Temperature class T4[1)] -50 ... +45 °C (-58 ... +113 °F) Temperature class T6[1)]	-40 ... +85 °C (-40 ... +185 °F) Temperature class T4 -40 ... +60 °C (-40 ... +140 °F) Temperature class T6
Output terminals SITRANS TH/ SITRANS TF single chamber housing: 1, 2 SITRANS TR: 3, 4 SITRANS TF dual chamber housing: (+) and (-)	**U_i = 30 V DC**, L_i = 0 µH, C_i = 1.0 nF	U_i = 30 V DC, L_i = 0 µH, C_i = 2.2 nF	-

ATEX/IECEx and others	SITRANS TH320/420/TR	SITRANS TF	Display
• Permissible ambient temperature	-50 °C to +85 °C (-58 °F to +185 °F) temperature class T4 -50 °C to +75 °C (-58 °F to +167 °F) temperature class T5 -50 °C to +60 °C (-58 °F to +140 °F) temperature class T6	-50 ... +75 °C (-58 ... +167 °F) Temperature class T4[1)] -50 ... +50 °C (-58 ... +113 °F) Temperature class T6[1)]	-
Input terminals SITRANS TH/TF: 3, 4, 5, 6, 7, 8, 9 SITRANS TR: 5, 6, 7, 8, 9, 10, 11, 12	**TH320/420/TR/TF320** U_o = 7.2 V DC, I_o = 12.9 mA, P_o = 23.3 mW, L_o = 200 mH, C_o = 13.5 µF **TH320/420/TR/TF420** (input 1 or 2) U_o = 7.2 V DC, I_o = 7.3 mA, P_o = 13.2 mW, L_o = 667 mH, C_o = 13.5 µF		-

1) A SITRANS TF display or a SITRANS TF in a dual chamber housing has the minimum permissible ambient temperature of -40 °C.

"Non-sparking nA/ec" type of protection

ATEX/IECEx and others	SITRANS TH320/420/TR	SITRANS TF	Display
• "Non-sparking nA/ec" type of protection	Zone 2 Take measures to ensure that the supply voltage (including transients) does not rise above 140% of the rated voltage.		
Name • ATEX	II 3 G Ex nA IIC T6 ... T4 Gc II 3 G Ex ec IIC T6 ... T4 Gc	II 3 G Ex ec IIC T6 ... T4 Gc II 3 G Ex nA IIC T6 ... T4 Gc	II 3 G Ex nA IIC Gc II 3 G Ex ec IIC Gc
• IECEx	Ex nA IIC T6 ... T4 Gc Ex ec IIC T6 ... T4 Gc	Ex ec IIC T6 ... T4 Gc Ex nA IIC T6 ... T4 Gc	Ex nA IIC Gc Ex ec IIC Gc
• EACEx	2Ex nA IIC T6 ... T4 Gc X		Ex e II Gc U Ex nA II Gc U
Output terminals SITRANS TH/ SITRANS TF single chamber housing: 1, 2 SITRANS TR: 3, 4 SITRANS TF dual chamber housing: (+) and (-)	U_n = 37 V DC, P_n = 851 mW		U_n = 2.5 V
• Permissible ambient temperature	-50 °C to +85 °C (-58 °F to +185 °F) temperature class T4 -50 °C to +70 °C (-58 °F to +158 °F) temperature class T5 -50 °C to +55 °C (-58 °F to +131 °F) temperature class T6	-50 ... +75 °C (-58 ... +167 °F) Temperature class T4[1)] -50 ... +45 °C (-58 ... +113 °F) Temperature class T6[1)]	-40 ... +85 °C (-40 ... +185 °F) Temperature class T4 -40 ... +55 °C (-40 ... +131 °F) Temperature class T6

ATEX/IECEx and others	SITRANS TH320/420/TR	SITRANS TF	Display
	U_{max} = 30 V DC		
• Permissible ambient temperature	-50 °C to +85 °C (-58 °F to +185 °F) temperature class T4 -50 °C to +75 °C (-58 °F to +167 °F) temperature class T5 -50 °C to +60 °C (-58 °F to +140 °F) temperature class T6	-	-

1) A SITRANS TF display or a SITRANS TF in a dual chamber housing has the minimum permissible ambient temperature of -40 °C.

"Flameproof enclosure Ex d/dust explosion protection by enclosure Ex tb/tc" type of protection

ATEX/IECEx and others	SITRANS TH320/420/TR	SITRANS TF	Display
• "Flameproof enclosure Ex d/dust explosion protection by enclosure Ex tb/tc" type of protection	-	Zone 1/21/22	-
Name • ATEX	-	II 2 G Ex db IIC T6 ... T4 Gb II 2 D Ex tb IIIC T100°C Db II 3 D Ex tc IIIC T100°C Dc	-
• IECEx	-	Protection against explosion db IIC T6 ... T4 Gb Protection against explosion tb IIIC T100°C Db Protection against explosion tc IIIC T100°C Dc	-
• EACEx	-	1Ex d IIC T6...T4 GbX Ex tb IIC T100°C Db X	-
Output terminals SITRANS TF single chamber housing: 1, 2 SITRANS TF dual chamber housing: (+) and (-)	-	**U_{max} = 37 V DC**	-
• Permissible ambient temperature	-	-50 ... +75 °C (-58 ... +167 °F) Temperature class T4[1)] -50 ... +60 °C (-58 ... +140 °F) Temperature class T6[1)]	-

1) A SITRANS TF display or a SITRANS TF in a dual chamber housing has the minimum permissible ambient temperature of -40 °C.

8.2.4.2 FM/CSA

Only the technical specifications listed in the certificates (http://www.siemens.com/processinstrumentation/certificates) apply to applications in hazardous atmospheres.

FM/CSA	SITRANS TH320/420/TR	SITRANS TF	Display
Certificate number	The permissible operating values are specified in the certificate (http://www.siemens.com/processinstrumentation/certificates).		
	FM18CA0024X FM18US0046X FM18NUS0002 FM18NCA0001	FM21US0044X FM21CA0030X FM21NUS0004X FM21NCA0003X	
	CSA 1861385		
• "Intrinsic safety ia" or "Intrinsic safety IS" type of protection			
Labeling	IS,CL I, Div 1, GP ABCD, T6 ... T4 Ex ia IIC T6 ... T4 Ga AEx ia IIC T6 ... T4 Ga or Ex ib [ia Ga] IIC T6 ... T4 Gb AEx ib [ia Ga] IIC T6 ... T4 Gb	IS, CL I, II, III, Div 1, GP ABC-DEFG, T6 ... T4 Ex ia IIC T6 ... T4 Ga AEx ia IIC T6 ... T4 Ga or Ex ib [ia Ga] IIC T6 ... T4 Gb AEx ib [ia Ga] IIC T6 ... T4 Gb	IS,CL I, Div 1, GP ABCD, T6 ... T4 or Ex ia IIC T6 ... T4 Ga AEx ia IIC T6 ... T4 Ga
• "Non-explosive/energy limited NIFW" type of protection			
Labeling	NIFW, CL I, Div 2, GP ABCD T6 ... T4 AEx ic IIC T6 ... T4 Gc Ex ic IIC T6 ... T4 Gc		
• "Non-explosive NI" type of protection	Take measures to ensure that the supply voltage (including transients) does not rise above 140% of the rated voltage.		
Labeling	NI, CL I, Div 2, GP ABCD T6...T4 CL I, Zone 2, AEx nA IIC T6 ... T4 Gc Ex nA IIC T6 ... T4 Gc CL I, Div 2, GP ABCD, T6...T4 Ex nA IIC T6 ... T4 Gc		

FM/CSA	SITRANS TH320/420/TR	SITRANS TF	Display
• Explosion protection "Flameproof enclosure XP", "Dust ignition proof DIP"			
Labeling	-	CL I, Div 1, GP ABCD T6 ... T4 Type 4X CL II/III, Div 1, GP EFG T6 ... T4 Type 4X CL II/III, Div 2, GP FG T6 ... T4 Type 4X or AEx db IIC T6 ... T4 Gb AEx tb IIIC T100°C Db AEx tc IIIC T100°C Dc CL I, Div 1, GP ABCD T6 ... T4 Type 4X CL II/III, Div 1, GP EFG T6 ... T4 Type 4X CL II/III, Div 2, GP FG T6 ... T4 Type 4X Ex db IIC T6 ... T4 Gb Ex tb IIIC T100°C Db Ex tc IIIC T100°C Dc	-

8.3 Display

Ambient conditions	
Ambient temperature	-20 ... +85 °C (-7 ... +185 °F) You can find the data for use in hazardous areas in the respective certificate.
Storage temperature	-40 ... +85 °C (-40 ... +185 °F) You can find the data for use in hazardous areas in the respective certificate.
Best readability	-10 ... +70 °C (14 ... +158 °F)

Power supply	
Power supply	Is provided by the temperature transmitter
Own power consumption	< 3 mA
Voltage drop over terminals	< 2.5 V

Display	
Area of application	SITRANS TF and SITRANS TS500 temperature transmitter
Measuring frequency	≥ 2 Hz

Display	
Local display	Maximum 5 decimal places
Display range	-99999 ... +99999
Decimal point change	Automatically
Error warning	According to NAMUR NE 107

Mechanical construction	
Dimensions	Diameter: 64.3 mm (2.53") Height: 15 ... 22.5 mm (0.6 ... 0.88")
Installation	Plug in
Enclosure material	Plastic
Wiring	Plug-in connection

Product documentation and support

A

A.1 Product documentation

Process instrumentation product documentation is available in the following formats:

- Certificates (http://www.siemens.com/processinstrumentation/certificates)
- Downloads (firmware, EDDs, software) (http://www.siemens.com/processinstrumentation/downloads)
- Catalog and catalog sheets (http://www.siemens.com/processinstrumentation/catalogs)
- Manuals (http://www.siemens.com/processinstrumentation/documentation)
  You have the option to show, open, save, or configure the manual.
  - "Display": Open the manual in HTML5 format
  - "Configure": Register and configure the documentation specific to your plant
  - "Download": Open or save the manual in PDF format
  - "Download as html5, only PC": Open or save the manual in the HTML5 view on your PC

You can also find manuals with the Mobile app at Industry Online Support (https://support.industry.siemens.com/cs/ww/de/sc/2067). Download the app to your mobile device and scan the device QR code.

Product documentation by serial number

Using the PIA Life Cycle Portal, you can access the serial number-specific product information including technical specifications, spare parts, calibration data, or factory certificates.

Entering a serial number

1. Open the PIA Life Cycle Portal (ttps://www.pia-portal.automation.siemens.com).
2. Select the desired language.
3. Enter the serial number of your device. The product documentation relevant for your device is displayed and can be downloaded.

To display factory certificates, if available, log in to the PIA Life Cycle Portal using your login or register.

Scanning a QR code

1. Scan the QR code on your device with a mobile device.
2. Click "PIA Portal".

To display factory certificates, if available, log in to the PIA Life Cycle Portal using your login or register.

A.2 Technical support

Technical support

If this documentation does not completely answer your technical questions, you can enter a Support Request (http://www.siemens.com/automation/support-request).

Additional information on our technical support can be found at Technical Support (http://www.siemens.com/automation/csi/service).

Service & support on the Internet

In addition to our technical support, Siemens offers comprehensive online services at Service & Support (http://www.siemens.com/automation/serviceandsupport).

Contact

If you have further questions about the device, contact your local Siemens representative at Personal Contact (http://www.automation.siemens.com/partner).

To find the contact for your product, go to "all products and branches" and select "Products & Services > Industrial automation > Process instrumentation".

Contact address for business unit:
Siemens AG
Digital Industries
Process Automation
Östliche Rheinbrückenstr. 50
76187 Karlsruhe, Germany

Accessory part sealing plug / thread adapter

B

B.1 Intended use of accessory part

The sealing plug and the thread adapter (components) can be used for installation in electrical equipment of flameproof" "Ex d" type of protection of groups IIA, IIB, IIC as well as dust protection by enclosure "Ex t" type of protection.

B.2 Safety instructions for accessory part

WARNING

Incorrect assembly

- The component can be damaged or destroyed or its functionality impaired through incorrect assembly.
  - Mount the component using a suitable tool. Refer to the information in Chapter "Technical specifications of accessory part (Page 94)", for example, torques for installation.
- For "Explosion-proof Ex d" type of protection: To ensure an engagement depth of 8 mm, the enclosure must have a wall thickness of at least 10 mm.

Improper modifications

Danger to personnel, system and environment can result from modifications and repairs of the component, particularly in hazardous areas.

- Any modification which deviates from the delivery state is not permitted.

Loss of enclosure type of protection

IP protection is not guaranteed without sealant.

- Use a suitable thread sealant.
- If you are using the component in type of protection dust protection by enclosure "Ex t", use the supplied sealing ring (①, figure in Chapter "Dimensional drawings of accessory part (Page 95)").

Unsuitable fluids in the environment

Danger of injury or damage to device.

Aggressive media in the environment can damage the sealing ring. Type of protection and device protection may no longer be guaranteed.

- Make sure that the sealing material is suitable for the area of use.

Note

Loss of type of protection

Changes in the ambient conditions can loosen the component.

- As part of the recommended maintenance intervals: Check the compression fitting for tight fit and tighten, if necessary.

B.3 Technical specifications of accessory part

Technical specifications sealing plug and thread adapter	
Sealing plug suitable for types of protection	Explosion-proof enclosure "d" of groups IIA, IIB, IIC Dust protection by enclosure "t"
Standard compliance	The components meet Directive 94/9. They meet the requirements of standards IEC/EN 60079-0; IEC/EN 60079-1; IEC/EN 60079-31.
Explosion protection	
• Gas explosion protection	II2G Ex d IIC
• Dust explosion protection	II1D Ex t IIIC
Certificates	IECEx TUN 13.0022 U TÜV 13 ATEX 121710 U
Material for sealing plug / thread adapter	Stainless steel
Material for seal	Vulcanized fiber or Victor Reinz AFM 30
Ambient temperature range	-40 ... +100 °C (-40 ... +212 °F)
For "Ex d" type of protection: Required wall thickness for tappings	10 mm
Torque	
• For thread size M20 x 1.5	65 Nm
• For thread size M25 x 1.5	95 Nm
• For thread size ½-14 NPT	65 Nm
Width A/F for thread size M20 x 1.5	27
Width A/F for thread size M25 x 1.5	30
Key size for thread size ½-14 NPT	10

B.4 Dimensional drawings of accessory part

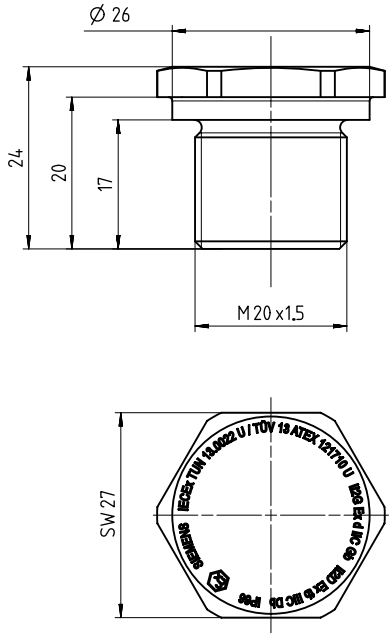

Sealing plug Ex d, M20 x 1.5, dimensions in mm

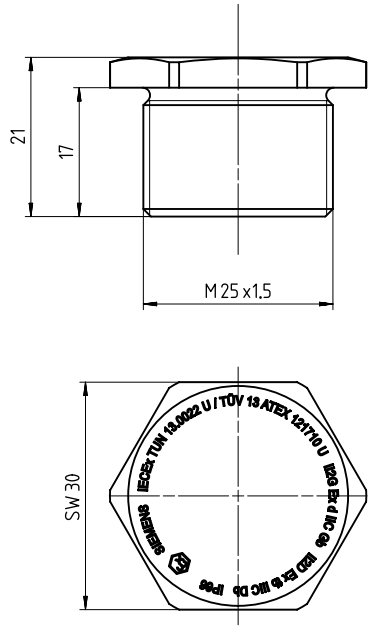

Sealing plug Ex d, M25 x 1.5, dimensions in mm

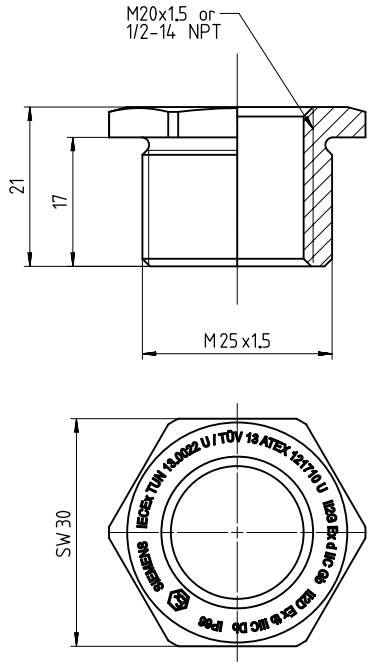

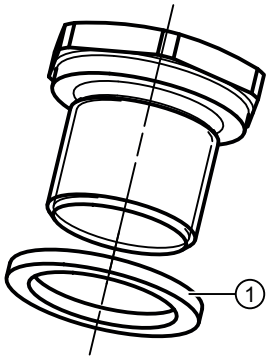

① Sealing ring: Use for dust protection "Ex t" type of protection.

Thread adapter Ex d, M25 x 1.5 on M20 x 1.5 and M25 x 1.5 on ½-14 NPT, dimensions in mm

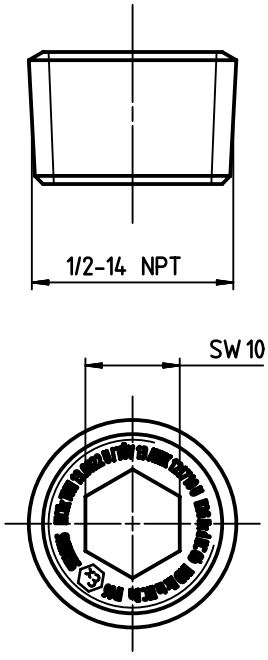

Sealing plug Ex d ½ -14 NPT

Index

A

Article number, 17
ATEX, 14

C

Catalog
    catalog sheets, 91
Certificates, 21, 91
Cleaning, 74
Customer Support, (Refer to Technical support)

D

DC voltage sources, 13
DIN rail, 33, 34
Disassembly, 39
Disposal, 77
Document history, 11
Downloads, 91

E

Ex nameplate, 14

G

G rail, 33

H

Hazardous area
    Laws and directives, 21
    Qualified personnel, 22
Hotline, (Refer to Support request)

L

Laws and directives
    Disassembly, 21
    Personel, 21

M

Maintenance, 73
Manuals, 91
Modifications
    correct usage, 22
    improper, 22

N

Nameplate, 14
    ATEX, 14
NEPSI, 14

P

Potentiometers, 13
Product name, 17

Q

QR code, 17
Qualified personnel, 22

R

Resistance thermometer, 13
Resistance-based sensor, 13
Return procedure, 77

S

Scope of delivery, 17
Sealing plug
    Technical specifications, 94
Serial number, 17
Service, 92
Service and support
    Internet, 92
Support, 92
Support request, 92

T

Technical support, 92
    partner, 92
    personal contact, 92
Test certificates, 21
Thermocouples, 13
Threaded adapter
    Technical specifications, 94
Torque, 94

W

Warranty, 19