SIEMENS

SITRANS L

Controllers SITRANS LT500 with mA/HART sensor inputs

Operating Instructions

Getting started 1
Introduction 2
Safety notes 3
Description 4
Installing/mounting 5
Connecting 6
Commissioning 7
Operating 8
Parameter assignment 9
Service and maintenance 10
Diagnostics and troubleshooting 11
Technical specifications 12
Dimension drawings 13
Product documentation and support A
Technical reference B
Communication C
Remote operation D
HMI menu structure E
Abbreviations F

7ML60.. (SITRANS LT500 with mA/HART sensor inputs)

10/2021
A5E48417538-AB

Legal information

Warning notice system

This manual contains notices you have to observe in order to ensure your personal safety, as well as to prevent damage to property. The notices referring to your personal safety are highlighted in the manual by a safety alert symbol, notices referring only to property damage have no safety alert symbol. These notices shown below are graded according to the degree of danger.

⚠ DANGER
indicates that death or severe personal injury **will** result if proper precautions are not taken.

⚠ WARNING
indicates that death or severe personal injury **may** result if proper precautions are not taken.

⚠ CAUTION
indicates that minor personal injury can result if proper precautions are not taken.

NOTICE
indicates that property damage can result if proper precautions are not taken.

If more than one degree of danger is present, the warning notice representing the highest degree of danger will be used. A notice warning of injury to persons with a safety alert symbol may also include a warning relating to property damage.

Qualified Personnel

The product/system described in this documentation may be operated only by **personnel qualified** for the specific task in accordance with the relevant documentation, in particular its warning notices and safety instructions. Qualified personnel are those who, based on their training and experience, are capable of identifying risks and avoiding potential hazards when working with these products/systems.

Proper use of Siemens products

Note the following:

⚠ WARNING
Siemens products may only be used for the applications described in the catalog and in the relevant technical documentation. If products and components from other manufacturers are used, these must be recommended or approved by Siemens. Proper transport, storage, installation, assembly, commissioning, operation and maintenance are required to ensure that the products operate safely and without any problems. The permissible ambient conditions must be complied with. The information in the relevant documentation must be observed.

Trademarks

All names identified by ® are registered trademarks of Siemens AG. The remaining trademarks in this publication may be trademarks whose use by third parties for their own purposes could violate the rights of the owner.

Disclaimer of Liability

We have reviewed the contents of this publication to ensure consistency with the hardware and software described. Since variance cannot be precluded entirely, we cannot guarantee full consistency. However, the information in this publication is reviewed regularly and any necessary corrections are included in subsequent editions.

Siemens AG
Digital Industries
Postfach 48 48
90026 NÜRNBERG
GERMANY

Document order number: A5E48417538
Ⓟ 09/2021 Subject to change

Copyright © Siemens AG 2021.
All rights reserved

Table of contents

1 Getting started 13

2 Introduction 14

2.1 Purpose of this documentation 14

2.2 Document history 14

2.3 FW revision history 15

2.4 Designated use 15

2.5 Product compatibility 15

2.6 Items supplied 18

2.7 Checking the consignment 18

2.8 Security information 19

2.9 Transportation and storage 19

2.10 Notes on warranty 20

3 Safety notes 21

3.1 Preconditions for use 21
3.1.1 Warning symbols on the device 21
3.1.2 Laws and directives 21
3.1.3 Conformity with European directives 22
3.1.4 Conformity with UK regulations 22
3.1.5 Requirements for special applications 23

4 Description 24

4.1 Overview SITRANS LT500 24

4.2 Principle of operation 25

4.3 Sensor configuration 25

4.4 Features 25

4.5 Applications 26

4.6 Approvals 26

4.7 Communication 26

5 Installing/mounting 27

5.1 Basic safety notes 27
5.1.1 Installation location requirements 27
5.1.2 Proper mounting 28

5.2 Installing/mounting the device 28
5.2.1 General installation notes 28
5.2.2 Drilling cable entry holes 30

5.2.3 Wall mounting ... 32
5.2.4 Panel mounting ... 33
5.3 Installing the communication card ... 36
5.4 Installing the memory card ... 37
5.5 Disassembly ... 37
6 Connecting ... 38
6.1 Basic safety notes ... 38
6.1.1 Not initial connection ... 38
6.2 Connecting SITRANS LT500 ... 39
6.2.1 Sensor connections ... 40
6.2.2 Wiring compartment ... 40
6.2.3 Accessing wiring compartment ... 40
6.2.4 Terminal board ... 43
6.2.5 Cables ... 43
6.2.6 Remote sensors ... 44
6.2.7 Relays ... 44
6.2.8 mA output ... 45
6.2.9 Digital inputs ... 45
6.2.10 Power ... 47
6.2.11 Communication ... 48
6.2.11.1 Communication fieldbus ... 48
6.2.11.2 HART ... 48
6.2.11.3 Modbus RTU ... 50
6.2.11.4 PROFIBUS PA/DP ... 51
6.2.11.5 PROFINET ... 51
7 Commissioning ... 52
7.1 Basic safety notes ... 52
7.2 General requirements ... 52
7.3 Local operation ... 53
7.4 Device startup ... 54
7.5 Local commissioning ... 55
7.5.1 Wizard order ... 55
7.5.2 Wizards ... 56
7.5.2.1 Wizard overview ... 56
7.5.2.2 Quick commissioning ... 60
7.5.2.3 Pump control ... 84
7.5.2.4 Basic control ... 89
7.5.2.5 Alarms ... 92
7.6 Remote commissioning ... 98
7.7 Requesting an echo profile ... 98
7.8 Testing the configuration ... 99
7.9 Application examples ... 100
7.9.1 Level application example ... 100
7.9.2 Volume flow application example ... 101

8 Operating ... 103

8.1 Local operation ... 103
8.1.1 Local display (HMI) ... 103
8.1.1.1 Access control ... 104
8.1.1.2 Display views ... 105
8.1.1.3 Process value damping ... 122
8.1.2 Versions available for local operation ... 122
8.1.2.1 Single-point versions ... 123
8.1.2.2 Dual-point versions ... 123
8.1.3 Starting measurements ... 124
8.1.3.1 Measurement conditions ... 124
8.1.3.2 Sensor parameters controlled by SITRANS LT500 ... 127
8.1.4 Process values ... 128
8.1.4.1 Alarms ... 130
8.1.5 Totalizers ... 133
8.1.6 Inputs and outputs ... 133
8.1.6.1 Current outputs ... 133
8.1.6.2 Relay outputs ... 136
8.1.6.3 Digital inputs ... 143
8.1.7 Application ... 145
8.1.7.1 Volume ... 145
8.1.7.2 Pump control ... 147
8.1.7.3 Volume flow ... 162
8.1.7.4 Time to spill ... 181
8.1.7.5 Time of day relay ... 181
8.1.7.6 Basic control ... 182
8.1.7.7 Alarms ... 182
8.1.8 Memory card ... 182
8.1.8.1 Copy configuration ... 183
8.1.8.2 Data logging ... 184
8.1.9 Simulation ... 184
8.1.9.1 Pump relay behavior during simulation ... 185
8.1.9.2 Fail-safe and simulation ... 186
8.1.9.3 Communication status ... 186
8.1.9.4 Simulation process ... 187
8.1.10 Diagnostics ... 190
8.1.11 Audit trail ... 190
8.1.11.1 Audit trail logging ... 190
8.1.12 Maintenance ... 191
8.1.12.1 Diagnostic log ... 192
8.1.13 Security ... 192

8.2 Remote operation ... 192

9 Parameter assignment ... 193

9.1 Quick start (1) ... 194
9.1.1 Quick commissioning (1.1) ... 194
9.1.2 Pump control (1.2) ... 195
9.1.3 Basic control (1.3) ... 195
9.1.4 Alarms (1.4) ... 195

9.2 Setup (2) ... 195
9.2.1 Sensor (2.1) ... 195
9.2.1.1 Type (2.1.1) ... 195
9.2.1.2 Frequency (2.1.2) ... 196
9.2.1.3 Input mode (2.1.3) ... 196
9.2.1.4 Enter PIN (2.1.4) ... 196
9.2.1.5 Material type (2.1.5) ... 197
9.2.1.6 Calibration (2.1.6) ... 197
9.2.1.7 Fail-safe LOE timer (2.1.7) ... 200
9.2.1.8 Rate (2.1.8) ... 200
9.2.1.9 Auto false echo suppression (2.1.9) ... 201
9.2.1.10 Custom TVT shaper mode (2.1.10) ... 203
9.2.1.11 Custom TVT breakpoints (2.1.11) ... 203
9.2.1.12 Sensor override input (2.1.12) ... 203
9.2.1.13 Sensor override value (2.1.13) ... 203
9.2.1.14 Sensor override time delay (2.1.14) ... 204
9.2.1.15 Enable low level cut-off (2.1.15) ... 204
9.2.1.16 Low level cut-off (2.1.16) ... 204
9.2.1.17 Preconfigured (2.1.17) ... 204
9.2.1.18 Enable diagnostics (2.1.18) ... 205
9.2.1.19 Select fail-safe diagnostics (2.1.19) ... 206
9.2.1.20 Measurement point 2 (2.1.20) ... 206
9.2.2 Process values (2.2) ... 207
9.2.2.1 Level (point 1) (2.2.1) ... 207
9.2.2.2 Space (point 1) (2.2.2) ... 208
9.2.2.3 Distance (point 1) (2.2.3) ... 210
9.2.2.4 Head (point 1) (2.2.4) ... 211
9.2.2.5 Volume (point 1) (2.2.5) ... 213
9.2.2.6 Volume flow (point 1) (2.2.6) ... 215
9.2.2.7 Sensor temperature (point 1) (2.2.7) ... 217
9.2.2.8 <Point 2 parameters> (2.2.8) to (2.2.14) ... 219
9.2.2.9 Level difference (2.2.15) ... 219
9.2.2.10 Level average (2.2.16) ... 221
9.2.3 Totalizers (2.3) ... 222
9.2.3.1 Totalizer 1 (2.3.1) ... 222
9.2.3.2 Totalizer 2 (2.3.2) to Totalizer 4 (2.3.4) ... 227
9.2.3.3 Reset all totalizers (2.3.5) ... 227
9.2.4 Inputs and outputs (2.4) ... 228
9.2.4.1 Current output (HART) (2.4.1) ... 229
9.2.4.2 Current output 1 (2.4.2) ... 232
9.2.4.3 Current output 2 (2.4.3) ... 234
9.2.4.4 Digital input 1 (2.4.4) ... 235
9.2.4.5 Digital input 2 (2.4.5) ... 235
9.2.4.6 Relay output 1 (2.4.6) ... 236
9.2.4.7 Relay output 2 (2.4.7) to Relay output 6 (2.4.11) ... 248
9.2.5 Application (2.5) ... 248
9.2.5.1 Volume (2.5.1) ... 248
9.2.5.2 Custom volume table 1 to 16 (2.5.2) ... 250
9.2.5.3 Custom volume table 17 to 32 (2.5.3) ... 250
9.2.5.4 Pump control (2.5.4) ... 251
9.2.5.5 Pump energy savings (2.5.5) ... 256
9.2.5.6 Volume flow (2.5.6) ... 258

9.2.5.7 Custom flow table 1 to 16 (2.5.7) ... 265
9.2.5.8 Custom flow table 17 to 32 (2.5.8) ... 266
9.2.5.9 Time to spill (2.5.9) ... 266
9.2.5.10 Time of day relay (2.5.10) ... 267
9.2.5.11 Basic control (2.5.11) ... 268
9.2.5.12 Measurement point 2 (2.5.12) ... 269
9.2.6 Date and time (2.7) ... 269
9.2.6.1 Current date and time (2.7.1) ... 269
9.2.6.2 Set date and time (2.7.2) ... 269
9.2.7 Local display (2.8) ... 269
9.2.7.1 Brightness (2.8.1) ... 269
9.2.7.2 Backlight (2.8.2) ... 270
9.2.7.3 Contrast (2.8.3) ... 270
9.2.7.4 Process value damping (2.8.4) ... 270
9.2.7.5 View 1 (2.8.5) ... 271
9.2.7.6 View 2 (2.8.6) ... 274
9.2.7.7 View 3 (2.8.7) ... 277
9.2.7.8 View 4 (2.8.8) ... 280
9.2.7.9 View 5 (2.8.9) ... 283
9.2.7.10 View 6 (2.8.10) ... 286

9.3 Maintenance and diagnostics (3) ... 289
9.3.1 Identification (3.1) ... 289
9.3.1.1 Time of last modification (3.1.1) ... 289
9.3.1.2 Configuration change counter (3.1.2) ... 290
9.3.1.3 Long tag (3.1.3) ... 290
9.3.1.4 Tag (3.1.3) ... 290
9.3.1.5 Descriptor (3.1.4) ... 290
9.3.1.6 Message (3.1.5) ... 290
9.3.1.7 Location (3.1.6) ... 290
9.3.1.8 Installation date (3.1.7) ... 290
9.3.1.9 Manufacturer (3.1.8) ... 290
9.3.1.10 Product name (3.1.9) ... 290
9.3.1.11 Article number (3.1.10) ... 291
9.3.1.12 Serial number (3.1.11) ... 291
9.3.1.13 FW version (3.1.12) ... 291
9.3.1.14 HW version (3.1.13) ... 291
9.3.1.15 Final assembly number (3.1.14) ... 291
9.3.1.16 Local display (3.1.16) ... 291
9.3.1.17 Communication interface (3.1.17) ... 292
9.3.1.18 Sensor (3.1.19) ... 292
9.3.2 Diagnostics (3.2) ... 292
9.3.2.1 Device status (3.2.1) ... 292
9.3.2.2 Diagnostic log (3.2.2) ... 292
9.3.2.3 Clear diagnostic log (3.2.3) ... 292
9.3.2.4 Acknowledge mode (3.2.4) ... 293
9.3.2.5 Suppression time (3.2.5) ... 293
9.3.2.6 Status signal mode (3.2.6) ... 293
9.3.2.7 LR1xx TVT selection (3.2.8) ... 293
9.3.2.8 Echo profile (3.2.9) ... 294
9.3.2.9 Saved echo profiles (3.2.10) ... 294
9.3.2.10 Echo signal strength (3.2.11) ... 297
9.3.2.11 Confidence (3.2.12) ... 297

9.3.2.12 Short shot confidence (3.2.13) ... 297
9.3.2.13 Measurement point 2 (3.2.14) ... 298
9.3.3 Maintenance (3.3) ... 300
9.3.3.1 Operating time (3.3.1) ... 300
9.3.3.2 Scheduled maintenance (3.3.2) ... 301
9.3.3.3 Service monitoring (3.3.3) ... 306
9.3.4 Monitoring (3.4) ... 306
9.3.4.1 Sensor (3.4.1) ... 306
9.3.4.2 Process values (3.4.2) ... 307
9.3.4.3 Totalizers (3.4.3) ... 308
9.3.4.4 Inputs and outputs (3.4.4) ... 308
9.3.4.5 Electronics temperature (3.4.5) ... 309
9.3.4.6 Pump control (3.4.6) ... 310
9.3.5 Peak values (3.5) ... 311
9.3.5.1 Peak value 1 (3.5.1) ... 311
9.3.5.2 Peak value 2 (3.5.2) to Peak value 4 (3.5.4) ... 312
9.3.6 Memory card (3.7) ... 312
9.3.6.1 Installed (3.7.1) ... 312
9.3.6.2 Mass storage device (MSD) (3.7.2) ... 312
9.3.6.3 Capacity (3.7.3) ... 313
9.3.6.4 Free space (3.7.4) ... 313
9.3.6.5 Data logging (3.7.5) ... 313
9.3.7 Simulation (3.8) ... 315
9.3.7.1 Process values (3.8.1) ... 316
9.3.7.2 Totalizers (3.8.2) ... 317
9.3.7.3 Inputs and outputs (3.8.3) ... 318
9.3.7.4 Alarms and diagnostics (3.8.4) ... 320
9.3.8 Audit trail (3.9) ... 328
9.3.8.1 Parameter change log (3.9.1) ... 328
9.3.8.2 Clear parameter change log (3.9.2) ... 328
9.3.8.3 FW update change log (3.9.3) ... 328
9.3.8.4 Clear FW update change log (3.9.4) ... 328
9.3.9 Resets (3.11) ... 329
9.3.9.1 Device restart (3.11.1) ... 329
9.3.9.2 Number of device restarts (3.11.2) ... 329
9.3.10 Restore setup (3.12) ... 329
9.3.10.1 Create restore point (3.12.1) ... 330
9.3.10.2 Restore (3.12.2) ... 330
9.3.10.3 Delete restore point (3.12.3) ... 330
9.3.10.4 Restore ordered configuration (3.12.8) ... 330
9.3.10.5 Restore auto saved configuration (3.12.9) ... 330
9.3.11 Firmware update (3.13) ... 330

9.4 Communication (4) ... 331
9.4.1 HART (4.2) ... 331
9.4.1.1 Polling address (SW) (4.2.1) ... 331
9.4.1.2 Polling address (HW) (4.2.2) ... 331
9.4.1.3 HART device revision (4.2.3) ... 331
9.4.1.4 Number of response preambles (4.2.4) ... 331
9.4.1.5 Dynamic variable mapping (4.2.5) ... 331
9.4.1.6 Units (4.2.6) ... 333
9.4.1.7 Process value damping (4.2.7) ... 335

9.4.2 Modbus RTU (4.3) ... 336
9.4.2.1 Slave address (4.3.1) ... 336
9.4.2.2 Change Modbus settings (4.3.3) ... 336
9.4.2.3 Data rate (4.3.4) ... 337
9.4.2.4 Parity and stopbits (4.3.5) ... 337
9.4.2.5 Floating point byte order (4.3.6) ... 337
9.4.2.6 Integer byte order (4.3.7) ... 337
9.4.2.7 Register mapping (4.3.8) ... 338
9.4.2.8 Units (4.3.9) ... 339
9.4.2.9 Process value damping (4.3.10) ... 341
9.4.3 PROFIBUS PA/DP (4.4) ... 342
9.4.3.1 Slave address (4.4.1) ... 342
9.4.3.2 Change slave address (4.4.2) ... 342
9.4.3.3 GSD (General Station Description) (4.4.3) ... 342
9.4.3.4 Active GSD (General Station Description) (4.4.4) ... 342
9.4.3.5 Units (4.4.5) ... 343
9.4.3.6 Process value damping (4.4.6) ... 345
9.4.4 PROFINET (4.5.) ... 348
9.4.4.1 MAC address (4.5.1) ... 348
9.4.4.2 IP address (4.5.2) ... 348
9.4.4.3 IP subnet mask (4.5.3) ... 348
9.4.4.4 Default gateway (4.5.4) ... 348
9.4.4.5 Device name (4.5.5) ... 348
9.4.4.6 Units (4.5.6) ... 348
9.4.4.7 Process value damping (4.5.7) ... 351

9.5 Security (5) ... 354
9.5.1 Change user PIN (5.1) ... 354
9.5.2 Change expert PIN (5.2) ... 354
9.5.3 Recovery ID (5.3) ... 354
9.5.4 PIN recovery (5.4) ... 354
9.5.5 Enable user PIN (5.5) ... 354
9.5.6 Disable user PIN (5.6) ... 355
9.5.7 Auto logout (5.7) ... 355
9.5.8 Logout (5.8) ... 355

9.6 Language (6) ... 356

10 Service and maintenance ... 357

10.1 Basic safety notes ... 357

10.2 Cleaning ... 357

10.3 Maintenance and repair work ... 357
10.3.1 Spare parts list ... 358
10.3.2 Spare parts replacement with synchronization to memory card ... 358
10.3.3 Replacing memory card ... 359

10.4 Firmware update ... 360

10.5 Return procedure ... 361

10.6 Disposal ... 361

11 Diagnostics and troubleshooting ... 362

11.1 Communication troubleshooting ... 362

11.2 Device status symbols ... 362

11.3 Fault codes and corrective actions ... 364
11.3.1 Sensor diagnostics ... 364
11.3.2 Transmitter diagnostics ... 372

11.4 Operation troubleshooting ... 390
11.4.1 Common problems ... 390
11.4.2 Noise problems ... 393
11.4.2.1 Determining the noise source ... 393
11.4.2.2 Other noise sources ... 393
11.4.2.3 Avoiding common wiring problems ... 393
11.4.2.4 Reducing electrical noise ... 394
11.4.2.5 Reducing acoustical noise ... 394
11.4.3 Measurement difficulties ... 394
11.4.3.1 Adjusting sensor aiming ... 395
11.4.3.2 Install a sensor with a narrower beam ... 395
11.4.3.3 Fixed reading ... 395
11.4.3.4 Obstructions in the signal beam ... 395
11.4.3.5 Nozzle mountings ... 396
11.4.3.6 Setting device to ignore bad echo ... 396
11.4.4 Wrong reading ... 396
11.4.5 Echo profile display ... 397

12 Technical specifications ... 398

12.1 Power ... 398

12.2 Performance ... 399

12.3 User Interfaces ... 399

12.4 Outputs ... 400

12.5 Inputs ... 401

12.6 Construction ... 402

12.7 Operating conditions ... 402

12.8 Communication ... 403

12.9 Approvals ... 405

13 Dimension drawings ... 406

A Product documentation and support ... 408

A.1 Product documentation ... 408

A.2 Technical support ... 409

B Technical reference ... 410

B.1 Echo processing ... 410
B.1.1 Echo selection ... 411
B.1.1.1 TVT (time varying threshold) curves ... 411
B.1.1.2 Algorithm ... 411

B.1.1.3 Confidence ... 412
B.1.1.4 Echo threshold ... 412
B.1.1.5 Auto false echo suppression and Custom TVT ... 412
B.1.2 Measurement range ... 414
B.1.3 Measurement response ... 414
B.1.3.1 Damping ... 415

B.2 Distance calculation ... 416
B.2.1 Sound velocity (applicable only to Probe LU240) ... 417

B.3 Volume calculation ... 417

B.4 Pump totalizers ... 419
B.4.1 Inflow/discharge adjustment ... 419

B.5 Volume flow calculation ... 420
B.5.1 Example flumes ... 421
B.5.2 Example weirs ... 422
B.5.3 Method of flow calculation ... 422

B.6 Startup behavior ... 423

B.7 Diagnostic LEDs ... 423

B.8 Expert user parameters ... 424

B.9 Remote sensor parameters ... 424

B.10 Files stored on memory card ... 426

C Communication ... 429

C.1 HART ... 429
C.1.1 Device address ... 429
C.1.2 Mode of operation HART function ... 429
C.1.3 Device variables ... 430
C.1.4 Universal commands ... 431
C.1.5 Common practice commands ... 432
C.1.6 Status information ... 432
C.1.6.1 Device status ... 432
C.1.6.2 Device specific status ... 433
C.1.6.3 Extended device status ... 433
C.1.6.4 Additional device status (command #48) ... 433
C.1.6.5 Burst mode ... 434
C.1.6.6 Catch device variable ... 434

C.2 Modbus RTU ... 434
C.2.1 Modbus data map ... 434
C.2.2 Access control ... 436
C.2.3 Custom configurable data map ... 437
C.2.4 Fixed Modbus data map ... 438

C.3 PROFIBUS ... 444
C.3.1 GSD files ... 444
C.3.2 Cyclic communication ... 445
C.3.3 Module options ... 446
C.3.4 Status byte ... 448
C.3.5 Diagnostics ... 449

C.3.6 Acyclic communication ... 458
C.3.7 Physical block - Access control ... 459

C.4 PROFINET ... 460
C.4.1 GSDML files ... 460
C.4.2 PROFINET device setup ... 460
C.4.3 Cyclic communication ... 462
C.4.4 Module options ... 463
C.4.5 Status byte ... 465
C.4.6 Diagnostics ... 465
C.4.7 Acyclic communication ... 469
C.4.8 Physical block - Access control ... 470

D Remote operation ... 471

D.1 Overview of device configuration software ... 471

D.2 SIMATIC PDM ... 471
D.2.1 SIMATIC PDM Version ... 471
D.2.2 Initial setup ... 471
D.2.2.1 Deactivating buffers ... 472
D.2.3 Updating Electronic Device Description (EDD) ... 472
D.2.3.1 Configuring a new device ... 473
D.2.4 Changing parameter settings using SIMATIC PDM ... 473
D.2.5 Parameters via PDM structure view ... 474
D.2.6 Parameters and methods via PDM menus ... 475

D.3 FDT (Field Device Tool) ... 477

E HMI menu structure ... 478

F Abbreviations ... 498

Glossary ... 500

Index ... 503

Getting started

1

Introduction

Use this chapter as a quick reference. It provides links to the steps required for startup.

Before you begin, read the following safety information:

- General safety information (Page 21)
- Basic safety information: Installing/mounting (Page 27)
- Basic safety information: Connecting (Page 38)
- Basic safety information: Commissioning (Page 52)

Read the entire Operating Instructions to achieve optimum device performance.

Procedure

1. Install/mount the device.
   Installing/mounting (Page 27)
2. Connect the device.
   Connecting (Page 38)
3. Power up the device.
   Device startup (Page 54)
4. Commission the device via quick commissioning wizard:
   Quick commissioning: Level/Space/Distance (Page 63)
   Quick commissioning: Volume (Page 68)
   Quick commissioning: Volume flow (Page 75)
5. Setup pumps (if applicable).
   Pump control (Page 84)
6. Configure basic control relays (if applicable).
   Basic control (Page 89)
7. Configure alarms (if applicable).
   Alarms (Page 92)
8. Configure totalizers and samplers (if applicable) referencing the respective parameters:
   Parameter assignment (Page 193)

Startup is complete.

Introduction 2

2.1 Purpose of this documentation

These instructions contain all information required to commission and use the device. Read the instructions carefully prior to installation and commissioning. In order to use the device correctly, first review its principle of operation.

The instructions are aimed at persons mechanically installing the device, connecting it electronically, configuring the parameters and commissioning it, as well as service and maintenance engineers.

2.2 Document history

The following table shows major changes in the documentation compared to the previous edition.

Edition	Remark
10/2021	New FW release Initial EDD release (SIMATIC PDM, SITRANS DTM) Overall revision of chapters and content • Alarm wizard • Basic control wizard • Fail-safe relay control • Pump exercise • Time to spill • TVT shaping • LOE timer • Echo profiles logged on demand • Waiting icon on echo profile loading screen • Maintenance alarms for remote sensors • Confidence, Strength, and Velocity calibration of SITRANS Probe LU240 • Reliability, Regionalization (Frequency), and TVT curve selection of SITRANS LR1xx
10/2020	First edition

2.3 FW revision history

Firmware revision	PDM EDD revision	Date	Changes
1.02.00	1.00.00	October 15, 2021	• New device revision with initial EDD release
1.01.00	Not applicable	October 1, 2020	• Initial device release

2.4 Designated use

Use the device to measure process media in accordance with the Technical specifications (Page 398).

2.5 Product compatibility

The following table describes compatibility between document edition, device revision, engineering system and associated Electronic Device Description (EDD).

Service channel

Manual edition	Remarks	Device revision	Compatible version of device integration package	
10/2021	New device features	Service channel FW: 1.02.00 HW: 1.00.00 Device revision 1 or later	SIMATIC PDM V9.1	EDD: 1.00.00 or later
			SITRANS DTM V4.1 SP4	EDD: 1.00.00 or later
10/2020	First edition	Service channel FW: 1.01.00 HW: 1.00.00 Device revision 0	Not applicable	Not applicable

Modbus RTU

Manual edition	Remarks	Device revision	Compatible version of device integration package	
10/2021	New device features	Modbus RTU FW: 1.02.00 HW: 1.00.00 Device revision 1 or later	Not applicable	Not applicable
10/2020	First edition	Modbus RTU FW: 1.01.00 HW: 1.00.00 Device revision 0	Not applicable	Not applicable

HART

Manual edition	Remarks	Device revision	Compatible version of device integration package	
10/2021	New device features	HART FW: 1.02.00 HW: 1.00.00 Device revision 1 or later	Not applicable	Not applicable
10/2020	First edition	HART FW: 1.01.00 HW: 1.00.00 Device revision 0	Not applicable	Not applicable

PROFIBUS PA

Manual edition	Remarks	Device revision	Compatible version of device integration package	
10/2021	New device features	PROFIBUS PA FW: 1.02.00 HW: 1.00.00 Device revision 1 or later GSD: si0281de.gsd	Not applicable	Not applicable
10/2020	First edition	PROFIBUS PA FW: 1.01.00 HW: 1.00.00 Device revision 0 GSD: si0181de.gsd	Not applicable	Not applicable

PROFIBUS DP

Manual edition	Remarks	Device revision	Compatible version of device integration package	
10/2021	New device features	PROFIBUS DP FW: 1.02.00 HW: 1.00.00 Device revision 1 or later GSD: si0281df.gsd	Not applicable	Not applicable
10/2020	First edition	PROFIBUS DP FW: 1.01.00 HW: 1.00.00 Device revision 0 GSD: si0181df.gsd	Not applicable	Not applicable

PROFINET

Manual edition	Remarks	Device revision	Compatible version of device integration package	
10/2021	New device features	PROFINET FW: 1.02.00 HW: 1.00.00 Device revision 1 or later GSDML: gsdml-v2.35-sitrans_lt500-0b10-20210622.xml	Not applicable	Not applicable
10/2020	First edition	PROFINET FW: 1.01.00 HW: 1.00.00 Device revision 0 GSDML: gsdml-v2.4-sitrans_lt500-0b10-20200701.xml	Not applicable	Not applicable

NOTICE
Use in a domestic environment This Class A Group 1 equipment is intended for use in industrial areas. In a domestic environment this device may cause radio interference.

2.6 Items supplied

- SITRANS LT500 level controller

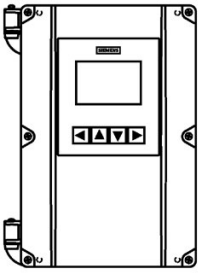

- Siemens Process Instrumentation documentation disk containing certificates, and manuals (for ATEX and UKEX approved devices only).
  (All device manuals and certificates can be found by scanning the QR code on the device or at Manuals (http://www.siemens.com/processinstrumentation/documentation).)

This device is shipped with an installed micro-SD memory card.

Note

Scope of delivery may vary, depending on version and add-ons. Make sure the scope of delivery and the information on the nameplate correspond to your order and the delivery note.

2.7 Checking the consignment

1. Check the packaging and the delivered items for visible damages.
2. Report any claims for damages immediately to the shipping company.
3. Retain damaged parts for clarification.
4. Check the scope of delivery by comparing your order to the shipping documents for correctness and completeness.

WARNING

Using a damaged or incomplete device

Risk to personnel, system and environment can result from use of a damaged or incomplete device.

- Check consignment and do not use device if damage is suspected.

2.8 Security information

Siemens provides products and solutions with industrial security functions that support the secure operation of plants, systems, machines and networks.

In order to protect plants, systems, machines and networks against cyber threats, it is necessary to implement – and continuously maintain – a holistic, state-of-the-art industrial security concept. Siemens' products and solutions constitute one element of such a concept.

Customers are responsible for preventing unauthorized access to their plants, systems, machines and networks. Such systems, machines and components should only be connected to an enterprise network or the internet if and to the extent such a connection is necessary and only when appropriate security measures (e.g. firewalls and/or network segmentation) are in place.

For additional information on industrial security measures that may be implemented, please visit
https://www.siemens.com/industrialsecurity.

Siemens' products and solutions undergo continuous development to make them more secure. Siemens strongly recommends that product updates are applied as soon as they are available and that the latest product versions are used. Use of product versions that are no longer supported, and failure to apply the latest updates may increase customer's exposure to cyber threats.

To stay informed about product updates, subscribe to the Siemens Industrial Security RSS Feed under
https://www.siemens.com/industrialsecurity.

2.9 Transportation and storage

To guarantee sufficient protection during transport and storage, observe the following:

- Keep the original packaging for subsequent transportation.
- Devices/replacement parts should be returned in their original packaging.
- If the original packaging is no longer available, ensure that all shipments are properly packaged to provide sufficient protection during transport. Siemens cannot assume liability for any costs associated with transportation damages.

NOTICE
Insufficient protection during storage The packaging only provides limited protection against moisture and infiltration. • Provide additional packaging as necessary.

Special conditions for storage and transportation of the device are listed in Technical specifications (Page 398).

2.10 Notes on warranty

The contents of this manual shall not become part of or modify any prior or existing agreement, commitment or legal relationship. The sales contract contains all obligations on the part of Siemens as well as the complete and solely applicable warranty conditions. Any statements regarding device versions described in the manual do not create new warranties or modify the existing warranty.

The content reflects the technical status at the time of publishing. Siemens reserves the right to make technical changes in the course of further development.

Safety notes

3

3.1 Preconditions for use

This device left the factory in good working condition. In order to maintain this status and to ensure safe operation of the device, observe these instructions and all the specifications relevant to safety.

Observe the information and symbols on the device. Do not remove any information or symbols from the device. Always keep the information and symbols in a completely legible state.

3.1.1 Warning symbols on the device

In manual	On product	Description
⚠	⚠	WARNING: refer to accompanying documents (manual) for details.
		Dispose of in an environmentally safe manner, and according to local regulations.

3.1.2 Laws and directives

Observe the safety rules, provisions and laws applicable in your country during connection, assembly and operation. These include, for example:

- National Electrical Code (NEC - NFPA 70) (USA)
- Canadian Electrical Code (CEC Part I) (Canada)

3.1.3 Conformity with European directives

The CE marking on the device symbolizes the conformity with the following European directives:

Electromagnetic compatibility EMC 2014/30/EU	Directive of the European Parliament and of the Council on the harmonisation of the laws of the Member States relating to electromagnetic compatibility
Low voltage directive LVD 2014/35/EU	Directive of the European Parliament and of the Council on the harmonisation of the laws of the Member States relating to the making available on the market of electrical equipment designed for use within certain voltage limits
2011/65/EU RoHS	Directive of the European Parliament and the Council on the restriction of the use of certain hazardous substances in electrical and electronic equipment

The applicable directives can be found in the EU declaration of conformity of the specific device.

3.1.4 Conformity with UK regulations

The UKCA marking on the device symbolizes the conformity with the following UK regulations:

Electromagnetic compatibility EMC SI 2016/1091	Electromagnetic Compatibility Regulations 2016
Low voltage directive LVD SI 2016/1101	Electrical Equipment (Safety) Regulations 2016
RoHS SI 2012/3032	The Restriction of the Use of Certain Hazardous Substances in Electrical and Electronic Equipment Regulations 2012

The applicable regulations can be found in the UKCA declaration of conformity of the specific device.

WARNING

Improper device modifications

Risk to personnel, system and environment can result from modifications to the device.

- Only carry out modifications that are described in the instructions for the device. Failure to observe this requirement cancels the manufacturer's warranty and the product approvals.

3.1.5 Requirements for special applications

Due to the large number of possible applications, each detail of the described device versions for each possible scenario during commissioning, operation, maintenance or operation in systems cannot be considered in the instructions. If you need additional information not covered by these instructions, contact your local Siemens office or company representative.

Note

Operation under special ambient conditions

We highly recommend that you contact your Siemens representative or our application department before you operate the device under special ambient conditions as can be encountered in nuclear power plants or when the device is used for research and development purposes.

Description

4

4.1 Overview SITRANS LT500

SITRANS LT500 is a universal level controller with continuous, non-contact measurement of liquids, slurries, and solids.

This six-relay device measures level, and volume, and is available in single- or dual-point versions. It has open channel monitoring (OCM) capabilities, a large number of advanced pump control algorithms, and is equipped with digital communication, suitable for virtually any application in a wide range of process industries.

The device features menu-driven programming and a host of wizards for plug-and-play performance, accessed through its four-button navigation panel with backlit graphical display.

The LT500 is a controller designed to configure specific HART based level sensors which are available as options during configuration. For use with sensors not available as options in the device menu, select "Generic (4 ... 20 mA)" to use the analog output of the sensor for driving control functions.

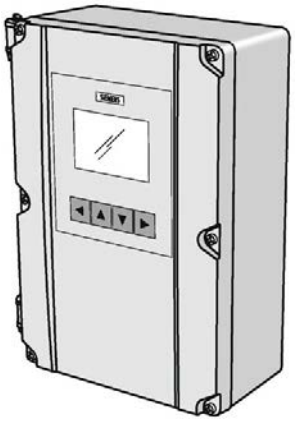

4.2 Principle of operation

The SITRANS LT500 is a universal controller, configured to meet the needs of different applications, from medium range solids applications to liquids management with open channel measurement capability.

Process values

The Primary Variable (PV) is one of nine process values, and is set in parameter "Process value" for each current output channel:

- Level (difference between material level and lower calibration point),
- Space (difference between material level and upper calibration point),
- Distance (difference between material level and sensor reference point),
- Head (difference between liquid level and zero head),
- Volume (volume of material based on level),
- Volume flow (flowrate in an open channel, based on head),
- Sensor temperature,
- Level difference (dual-point version only),
- Level average (dual-point version only).

4.3 Sensor configuration

Remote sensor(s) are configured via the SITRANS LT500. No additional programming is required at the sensor(s), other than for advanced parameter settings, which are generally not required. See Remote sensor parameters (Page 424).

4.4 Features

Easy to use HMI display with local four-button programming, menu-driven parameters, and Wizard support for key applications

- 14 optional language texts on HMI: English, German, French, Italian, Spanish, Portuguese, Dutch, Danish, Swedish, Finnish, Polish, Russian, Chinese, Japanese
- Removable terminal blocks for ease of wiring
- Digital input for back-up level override from point level device
- Various communication options: HART, PROFIBUS PA/DP, Modbus RTU, PROFINET
- EDDs for SIMATIC PDM, plus DTMs for FDTs (Field Device Tools)
- Single- or dual-point level monitoring
- Auto false echo suppression for fixed obstruction avoidance
- 1,3,6 relay output options with fully programmable functionality

- Level, volume, and volume flow measurements in open channels, differential control, extended pump control, and alarm functions
- Wall and panel mounting options

4.5 Applications

- Can be used with various materials, including water, municipal waste, acids, woodchips, or on materials with high angles of repose
- Offers true dual-point monitoring, digital communication
- Features access and setup of remote sensors including auto false echo suppression (AFES), echo profile reading, and application configuration
- Can monitor open channel flow and features more advanced relay alarming and pump control functions as well as volume conversion

Key applications:

Wet wells, flumes/weirs, bar screen control, hoppers, chemical storage, liquid storage, crusher bins, dry solids storage

4.6 Approvals

SITRANS LT500 is available with approvals for ordinary location installations.

In all cases, check the device nameplate and confirm the approval rating.

Note

Full list of approvals

For more information see Approvals (Page 405).

4.7 Communication

This device supports various communication protocols. For more information, see Communication (Page 429).

Installing/mounting 5

5.1 Basic safety notes

WARNING

Improper installation

Risk to personnel, system and environment can result from improper installation.

- Installation shall only be performed by qualified personnel and in accordance with local governing regulations.

5.1.1 Installation location requirements

NOTICE

Direct sunlight

Damage to device.

The device can overheat or materials become brittle due to UV exposure.

- Protect the device from direct sunlight.
- Make sure that the maximum permissible ambient temperature is not exceeded. Refer to the information in Technical specifications (Page 398).

NOTICE

Strong vibrations

Damage to device.

- In installations with strong vibrations, mount the transmitter in a low vibration environment.

5.1.2 Proper mounting

NOTICE
Incorrect mounting The device can be damaged, destroyed, or its functionality impaired through improper mounting. • Before installing ensure there is no visible damage to the device. • Make sure that process connectors are clean, and suitable gaskets and glands are used. • Mount the device using suitable tools. Refer to the information in Technical specifications (Page 398).

5.2 Installing/mounting the device

5.2.1 General installation notes

Requirements of installation

- Install device display window at shoulder level, unless most interaction is through a SCADA system.
- Provide easy access to local buttons.
- Minimize cable length requirements.
- Ensure mounting surface is free from vibration.
- Provide sufficient room to swing device lid open with clear access.
- Provide a place for a laptop computer for on-site configuration (optional, as laptop not required for configuration).

Things to avoid

- Exposure to direct sunlight. (Provide a sun shield to avoid direct sunlight.)
- Proximity to high voltage/current runs, contactors, SCR or variable frequency motor speed controllers.

Note

Improper device support

Regardless of the mounting surface used, it **must** be able to support four times the weight of the device or damage to the device may occur.

- Mount directly to wall or to electrical cabinet back panel with mounting screws: M4 (#6).

Note

Incorrect torque on device lid

Ensure torque for lid screws is set properly or damage to the device may occur.

- Tighten lid screws to 0.7 to 0.9 Nm (6 to 8 lb-inch).

Enclosure dimensions

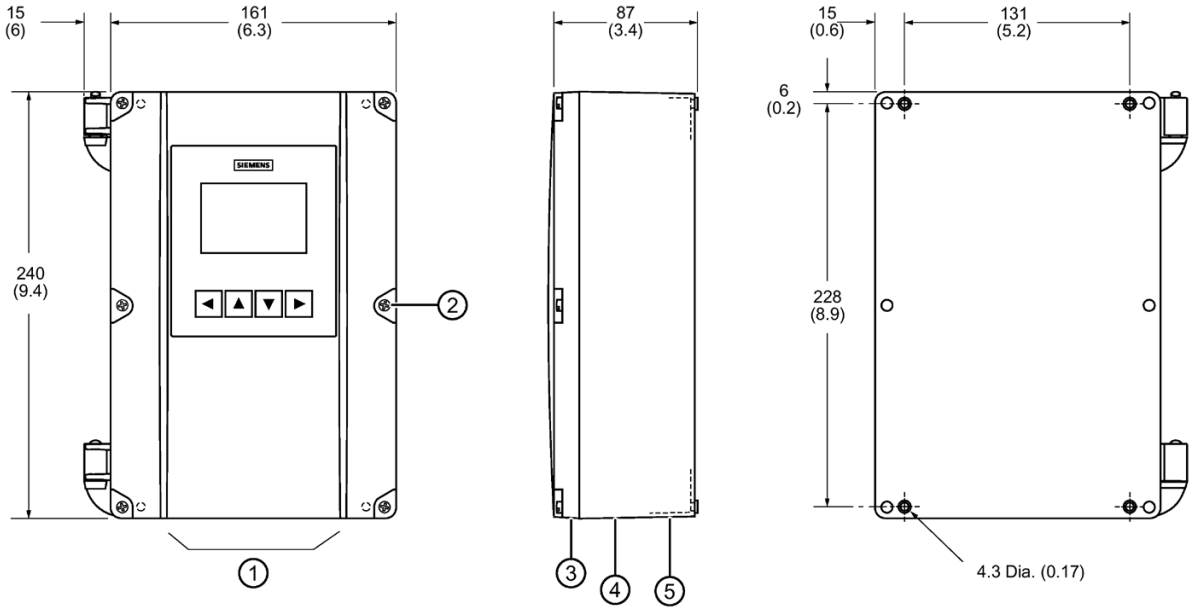

Dimensions in mm (inch)

① Cable entry location
② Lid screws (6)
③ Enclosure lid
④ Cable entry
⑤ Enclosure base
⑥ 4.3 mm diameter (0.17 inch), 4 mounting holes

5.2.2 Drilling cable entry holes

Cable entry holes can be ordered pre-drilled, or they can be drilled by the customer per the following procedure.

Condition

- The following have been reviewed: Basic safety notes (Page 27), and General installation notes (Page 28).
- This procedure (if applicable) must be completed prior to mounting the device.

Procedure

CAUTION

Electrostatic discharge

Some components in the device are sensitive to electrostatic discharge and could be damaged. Observe electrostatic discharge precautions prior to handling electronic components within the wiring compartment.

1. Remove the lid from the device by undoing its six lid screws and lifting it off its hinges.
2. Disconnect the display cable by pressing the locking tab and pulling straight out.
3. Remove the four screws holding the plastic cover and motherboard to the enclosure.
4. Remove the plastic cover by pulling it straight out.
5. Remove the motherboard from the enclosure by pulling the board straight out.
6. Drill the required cable entry holes. Ensure conduit holes do not interfere with the lower areas on the terminal block, circuit board, or communication card. See illustration below.
7. Reinstall the motherboard and plastic cover; secure them with the mounting screws.
8. Reconnect the display cable.
9. Reattach the lid onto the hinges.
10. Follow the applicable procedure to mount the device on wall or panel.

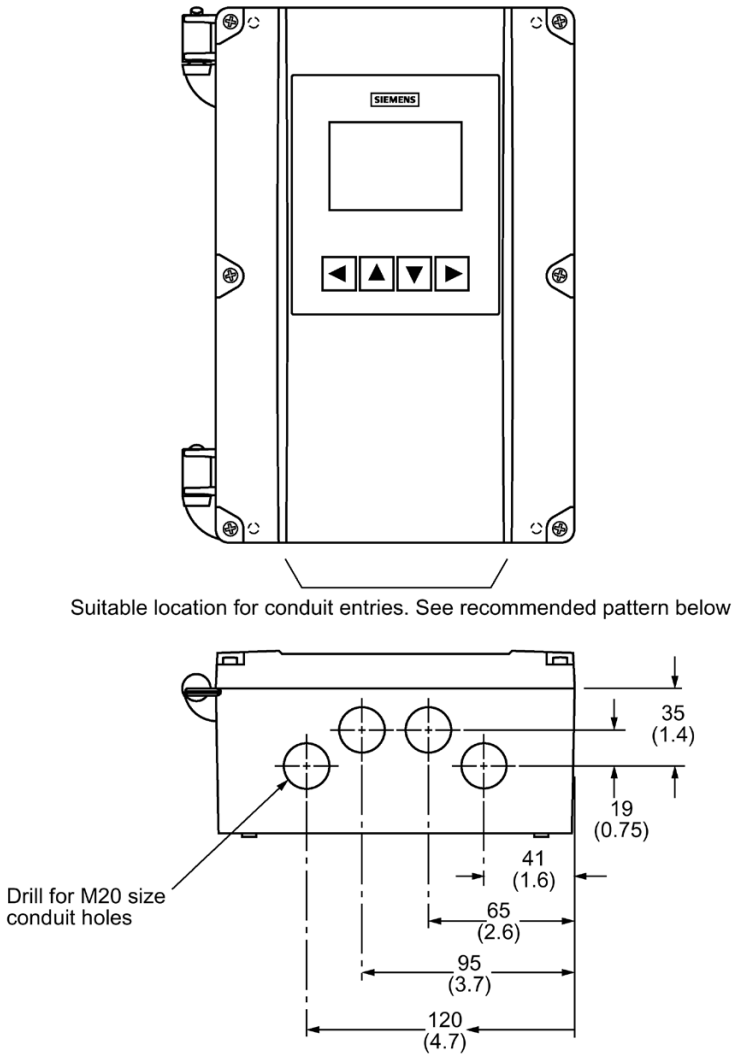

Dimensions in mm (inch)

5.2.3 Wall mounting

Condition

- The following have been reviewed: Basic safety notes (Page 27), and General installation notes (Page 28).
- The correct number of cable entry holes (for this installation) are available; device was ordered with pre-drilled cable entry holes, or customer has completed procedure Drilling cable entry holes (Page 30).

Procedure

1. Unscrew the lid (six screws) and open it to reveal the mounting holes.
2. Mark and drill four holes in the mounting surface for the four screws (customer supplied).

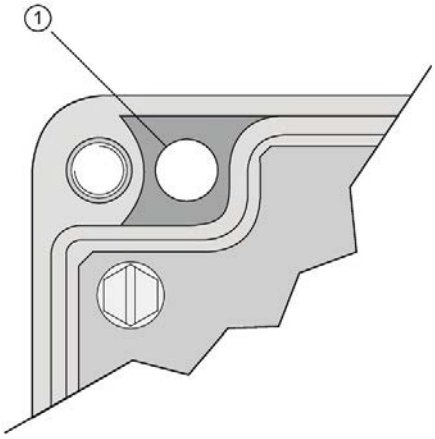

① Mounting screw holes

3. Fasten with a long screwdriver.
4. Add conduit or cable glands if applicable to application and wire as required:
   - Attach the conduit to the gland before connecting the gland to the enclosure.
   - Unscrew the glands and attach them loosely to the enclosure. Use only approved suitable-sized glands for watertight applications.
   - Thread the cables through the conduit/glands.
     To avoid interference, ensure that the power cable is kept separated from the signal cables, and then wire the cables to the terminal blocks.
   - Tighten the glands to form a good seal.
5. Screw the lid back in place noting recommended torque requirements.

5.2.4 Panel mounting

Panel mount dimensions

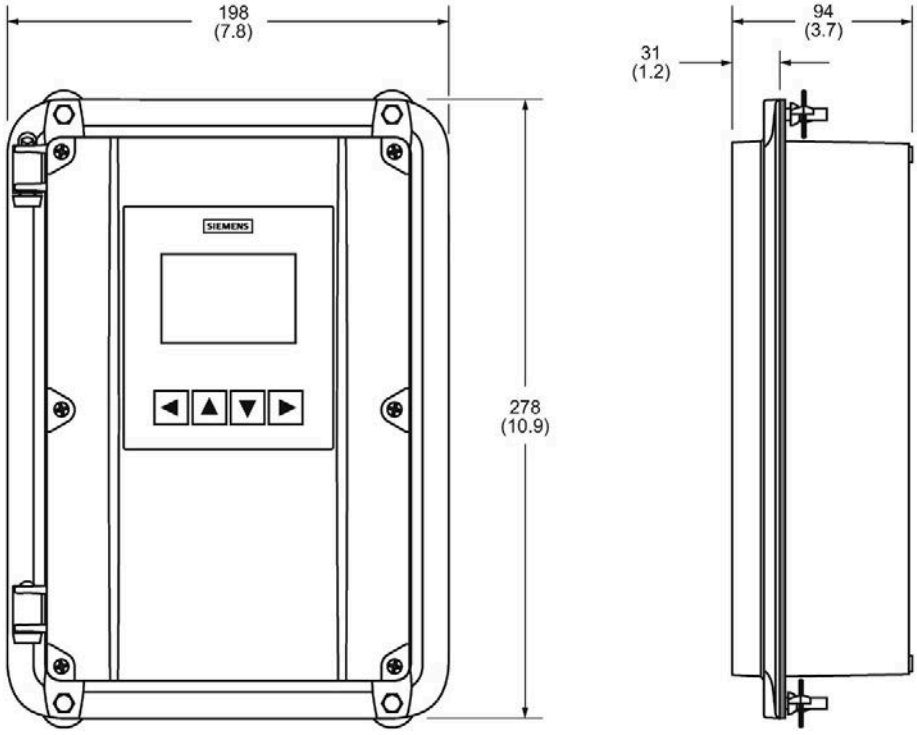

Dimensions in mm (inch)

Panel cutout dimensions

Installing the panel mount device requires making a cutout in the panel. The dimensions for the cutout are provided in the illustration below. A full size cutout template is provided with your device or may be downloaded from Siemens Industry Online Support (SIOS) (https://support.industry.siemens.com).

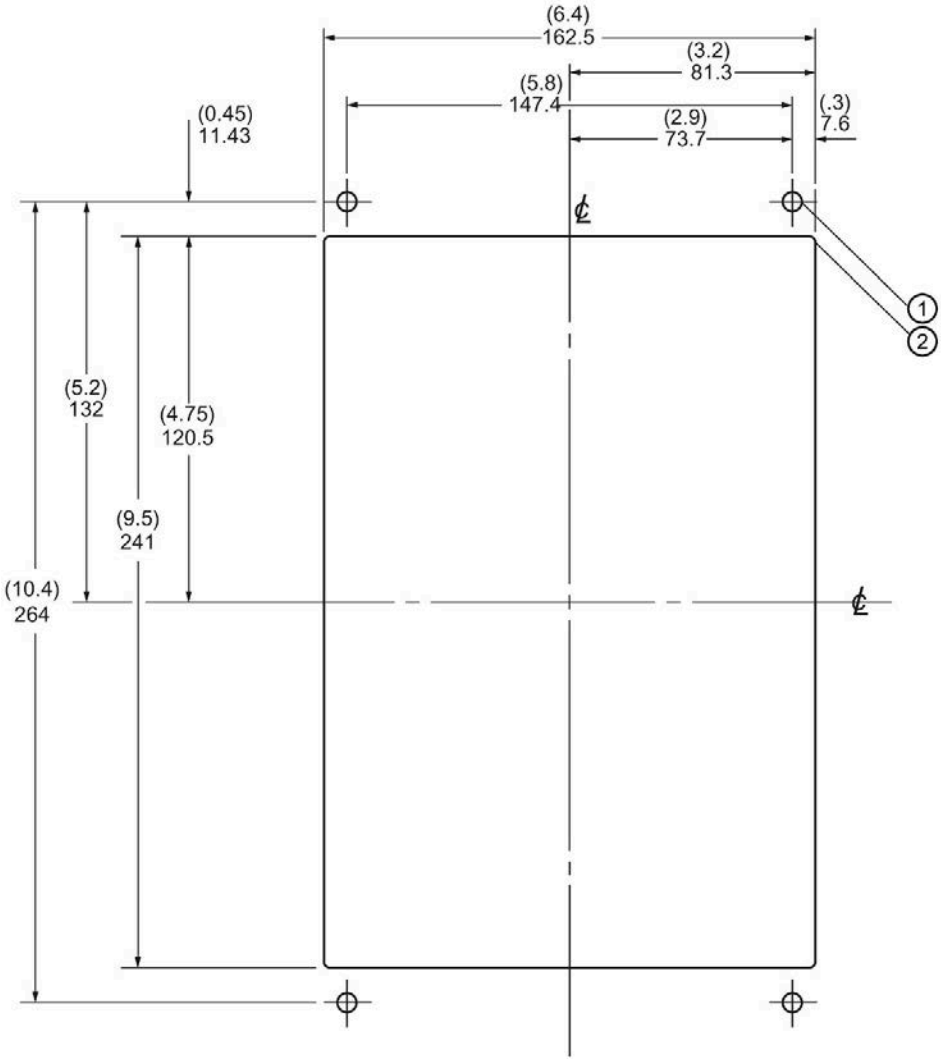

Dimensions in mm (inch)

① 6.3 mm diameter (0.25 inch)

② Min. rad. (type)

Condition

- The following have been reviewed: Basic safety notes (Page 27), and General installation notes (Page 28).
- The correct number of cable entry holes (for this installation) are available; device was ordered with pre-drilled cable entry holes, or customer has completed procedure Drilling cable entry holes (Page 30).

Procedure

1. Select a place for the device and fasten the template onto the panel (use tape or tacks).
2. Drill the four fastener holes.
3. Make the cutout using the appropriate tools.
4. Place the device into the panel and insert hexagonal fasteners through bevel slots and pre-drilled panel holes.
5. Fasten with wingnuts and hand tighten. (Use tape to hold the hexagonal heads in slots while attaching the wingnuts.)
6. Add conduit or cable glands if applicable to application and wire as required:
   - Unscrew the lid (six screws).
   - Attach the conduit to the gland before connecting the gland to the enclosure.
   - Unscrew the glands and attach them loosely to the enclosure. Use only approved suitable-sized glands for watertight applications.
   - Thread the cables through the conduit/glands.
     To avoid interference, ensure that the power cable is kept separated from the signal cables, and then wire the cables to the terminal blocks.
   - Tighten the glands to form a good seal.
   - Screw the lid back in place noting recommended torque requirements.

5.3 Installing the communication card

Communication cards are generally pre-installed. If necessary, follow these steps to install the card:

Procedure

⚠ CAUTION
Electrostatic discharge (ESD) Some components in the device (such as communication cards, or memory cards) are sensitive to electrostatic discharge and could be damaged. Be sure to handle such components in a manner that avoids any potential damage due to ESD.

1. Disconnect power to the device.
2. Align card with the mounting post and then press-fit with the two female connectors.
3. Use the screw supplied with the card to attach it to the mounting post.
4. Wire in the communication card (see wiring instructions for optional cards in Communication (Page 48)).

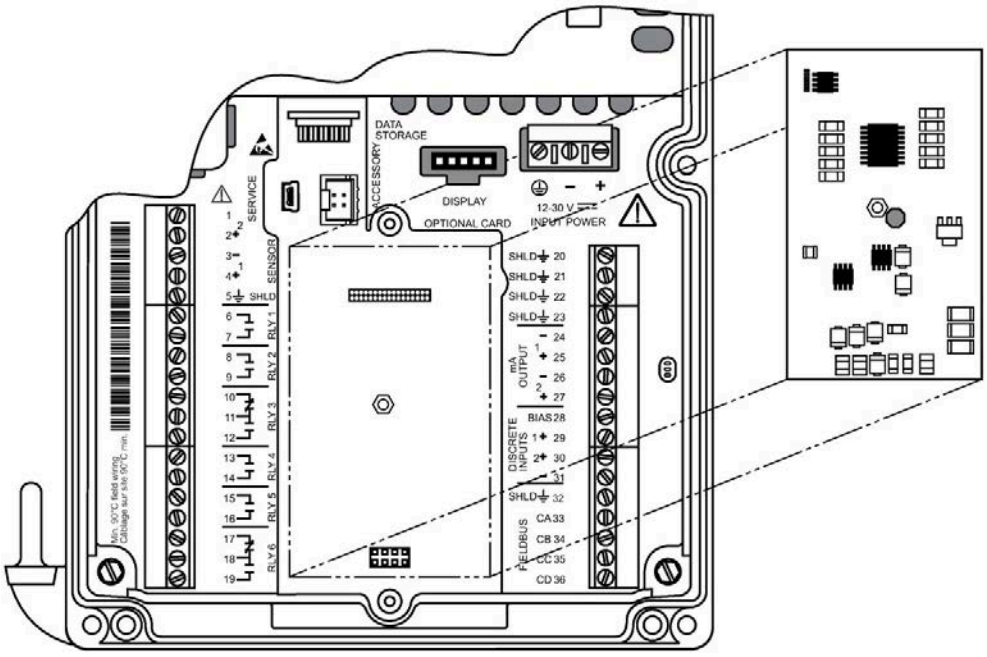

5.4 Installing the memory card

Memory card is generally pre-installed. If unit does not have one, follow these steps to install the card:

Procedure

CAUTION

Electrostatic discharge (ESD)

Some components in the device (such as communication cards, or memory cards) are sensitive to electrostatic discharge and could be damaged. Be sure to handle such components in a manner that avoids any potential damage due to ESD.

1. Disconnect power to the device.
2. Align card with memory card holder.
3. Press into place.

For location of card holder see illustration in Accessing wiring compartment (Page 40).

5.5 Disassembly

WARNING

Incorrect disassembly

Injury through electric shock may result from incorrect disassembly.

In order to disassemble correctly, observe the following:

- Before starting work, make sure that you have switched off all physical variables such as pressure, temperature, electricity etc. or that they have a harmless value.
- Secure the remaining connections so that no damage can result if the process is started unintentionally.

Connecting

6

6.1 Basic safety notes

WARNING

Missing PE/ground connection

Risk of electric shock.

Depending on the device version, connect the power supply as follows:

- **Power plug**: Ensure that the used socket has a PE/ground conductor connection. Check that the PE/ground conductor connection of the socket and power plug match each other.
- **Connecting terminals**: Connect the terminals according to the terminal connection diagram. First connect the PE/ground conductor.

WARNING

Loss of protection

Loss of approvals can result from improper connection.

- Check the nameplate on your device, to verify the approval rating.
- Use appropriate cable entry seals to maintain IP or NEMA rating.

6.1.1 Not initial connection

WARNING

Not initial connection

Risk of electric shock.

If this is not the initial connection, disconnect any power sources before adding or changing any wiring connections.

6.2 Connecting SITRANS LT500

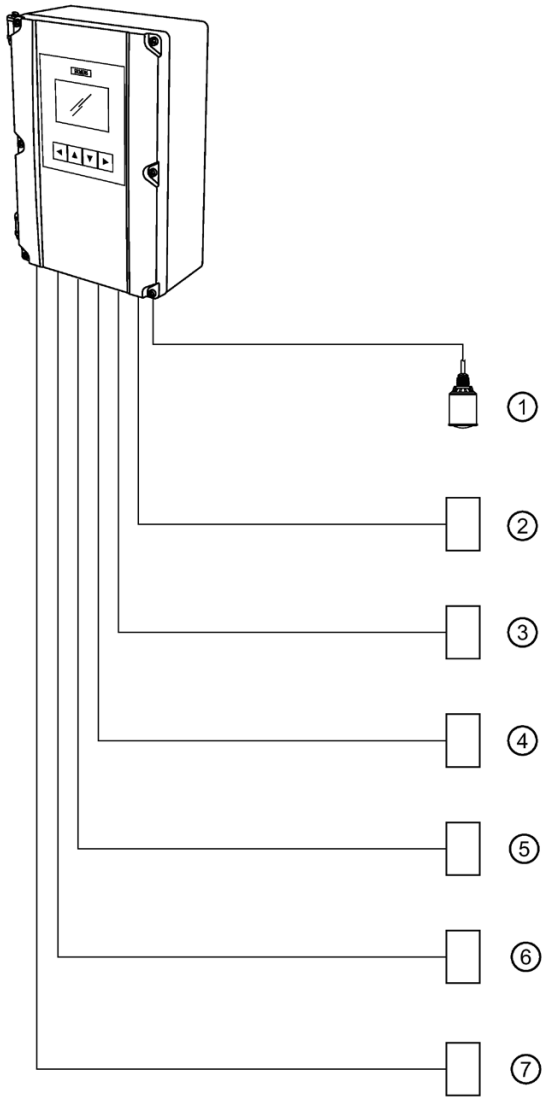

① Remote sensor(s)
② Customer alarm, pump, or control device
③ Customer device, digital output
④ Service interface
⑤ Communication card
⑥ Display, chart recorder, or other control device
⑦ Computer running SIMATIC PDM, or FDT.

6.2.1 Sensor connections

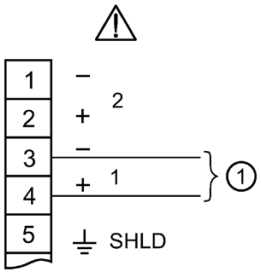

① To sensor (measurement point 1)
Note that for SITRANS LR110, or SITRANS LR120 connection:
positive = black wire
negative = white wire

6.2.2 Wiring compartment

Terminal strips can be removed to improve ease of wiring.

Separate cables and conduits may be required to conform to standard instrumentation wiring practices or electrical codes.

CAUTION

Terminal strip termination

Ensure the terminal strips are terminated to the correct location during re-installation. Failure to do so may result in damage to the device or the external equipment that is attached.

6.2.3 Accessing wiring compartment

Procedure

1. Loosen six screws on lid.
2. Lift lid up and to the left on its hinges.

3. The lid can remain open connected by hinges to access wiring compartment.

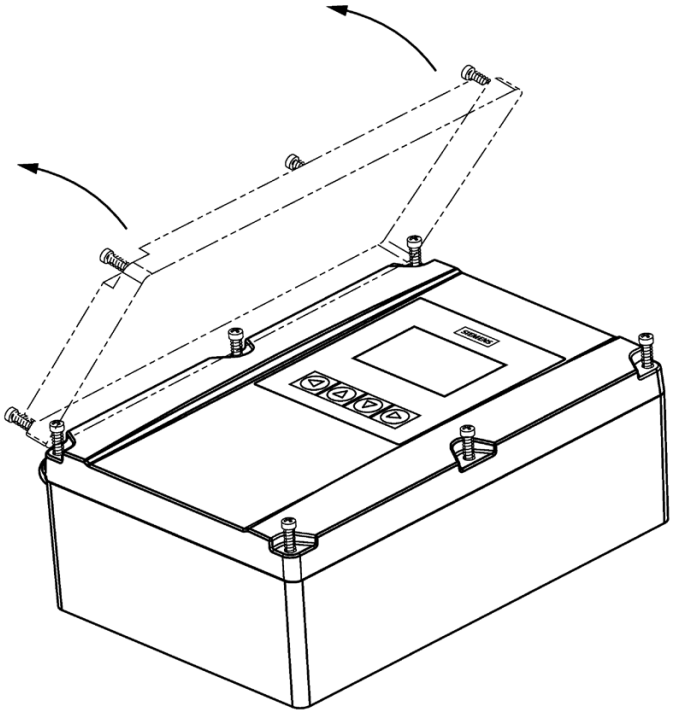

4. Make all connections as per instructions that follow.
5. When wiring complete, replace device lid.
6. Tighten lid screws to 0.7 to 0.9 Nm (6 to 8 lb-inch).

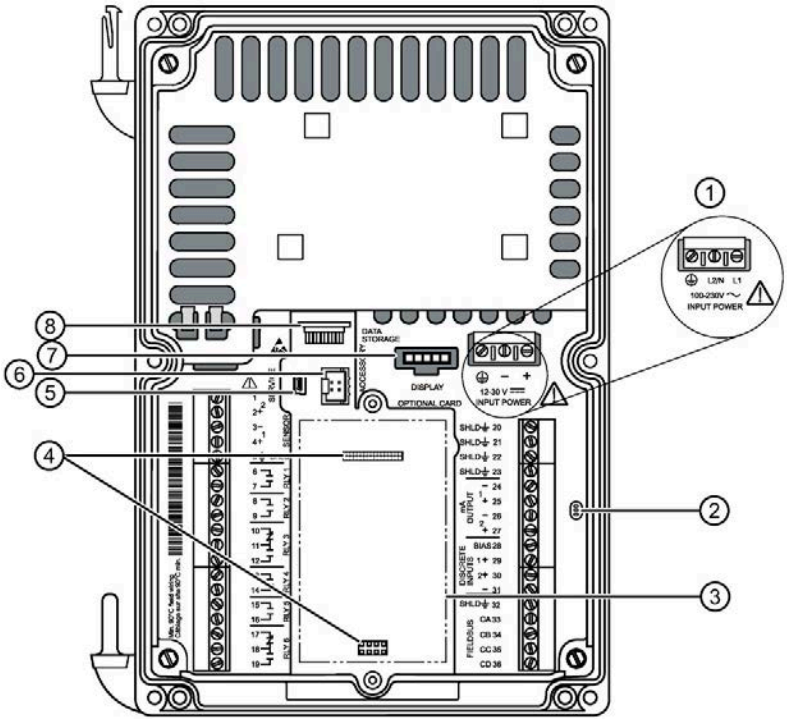

① Power supply (AC or DC)
② Diagnostic LEDs [1)]
③ Communication card (optional)
④ Female connector for optional communication card (2)
⑤ Service port
⑥ Accessory port
⑦ Display connector
⑧ Memory card holder

[1)] For more information see Diagnostic LEDs (Page 423).

6.2.4 Terminal board

Note

Recommended torque on terminal clamping screws

- 0.56 to 0.79 Nm (5 to 7 lb/inch)

Do not overtighten.

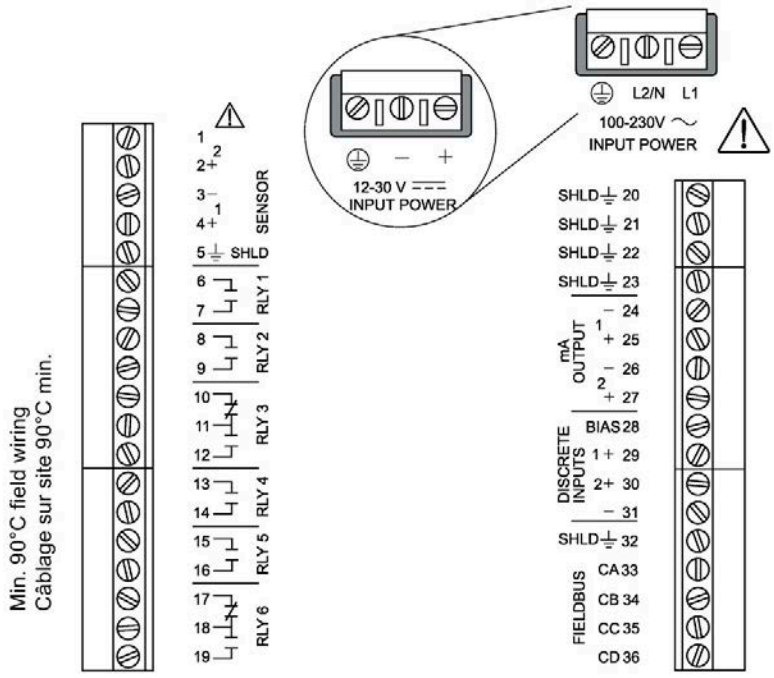

6.2.5 Cables

Connection	Cable type
Sensors, mA outputs, Input bias, Digital inputs, Communication fieldbuses	Copper conductors, twisted, with shield [1]/drain wire, 300 VAC 0.324 ... 0.823 mm² (22 ... 18 AWG)
Relay output, AC input	Relay to be copper conductors per local requirements to meet 250 V 5A contact rating.

[1] Preferred shielding is braided screen.

All field wiring cables must have a temperature rating of at least 90 °C.

6.2.6 Remote sensors

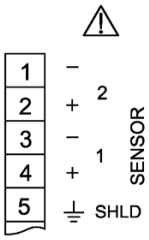

Up to two sensors (supported sensor, or generic mA sensor) can be connected.

6.2.7 Relays

Relay contacts are shown in the de-energized state. All relays are handled identically and can be configured as positive or negative logic using parameter Polarity (2.4.6.14) (Page 247) (per relay).

Relay ratings

- Four Form A, NO relays (1, 2, 4, 5)
- Two Form C, NO or NC relays (3, 6)
- 5A at 250 V AC, non-inductive

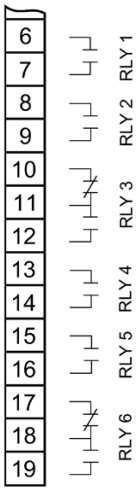

Note

Power failure

- All relays will fail in their de-energized states. Relays 1, 2, 4, and 5 are normally open and will fail open.
- Relays 3 and 6 can be wired either normally open or normally closed.

6.2.8 mA output

For more information on auxiliary mA outputs, see Current outputs (Page 133), and consult current output parameters in menu Inputs and outputs (2.4) (Page 228).

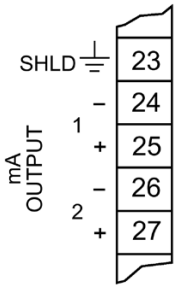

6.2.9 Digital inputs

The device has a 24 V power bias (terminal 28) for use with the digital inputs, or the digital inputs can be wired using external power.

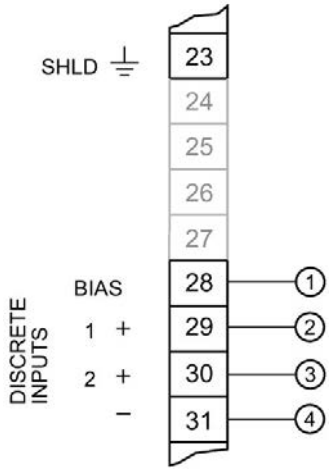

① Bias supply for positive digital inputs
② Positive input for digital input 1
③ Positive input for digital input 2
④ Common negative for digital inputs

Digital inputs used with internal bias supply

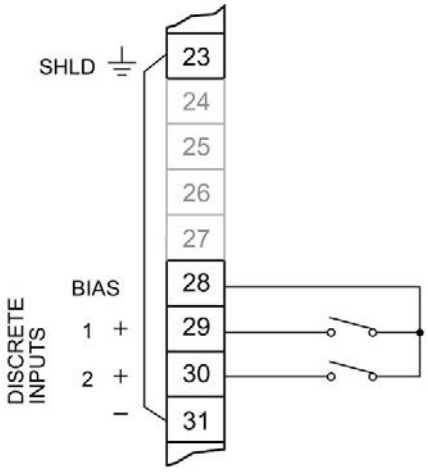

Note

Proper connection for use with internal bias supply

Terminals 23 and 31 must be connected together.

Digital inputs used with external bias supply

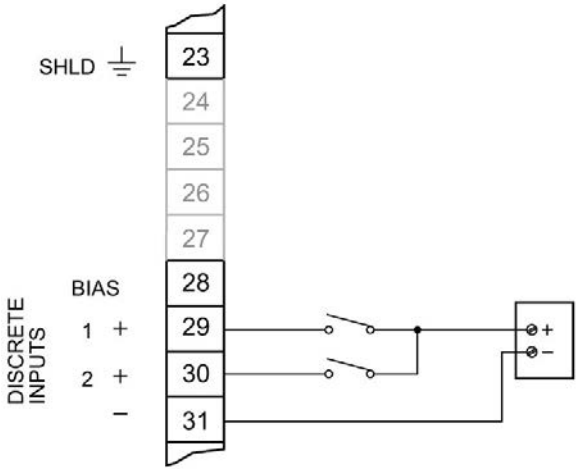

6.2.10 Power

WARNING

Improper power connection

Risk to personnel, system and environment can result from improper power connection.

- Before applying power to the device for the first time, ensure any connected alarm/control equipment is disabled until satisfactory system operation and performance is verified.
- This product is susceptible to electrostatic shock. Follow proper grounding procedures.
- All field wiring must have insulation suitable for rated voltages.
- Relay contact terminals are for use with equipment that has no accessible live parts. The maximum allowable working voltage between adjacent relay contacts shall be 250 V.
- The non-metallic enclosure does not provide grounding between conduit connections. Use grounding type bushings and jumpers.

AC power:

- All current-carrying conductors must be protected by a fuse or circuit breaker in the building installation, having a breaking capacity of up to 15A.
- A circuit breaker or switch in the building installation, marked as the disconnect switch, must be in close proximity to the equipment and within easy reach of the operator, and must disconnect all current-carrying conductors.

DC power:

- The DC input terminals shall be supplied from a source providing electrical isolation between the input and output, in order to meet the applicable safety requirements of IEC 61010-1. For example, SELV source.

Ensure that the device is connected to a reliable ground.

AC power

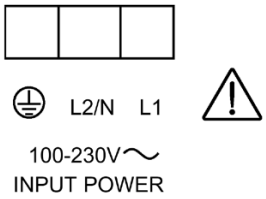

DC power

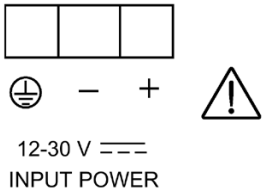

6.2.11 Communication

6.2.11.1 Communication fieldbus

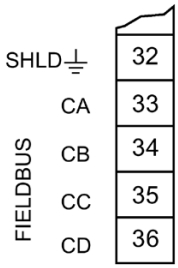

Connect, based on protocols that follow.

For a list of supported protocols see Communication (Page 403).

6.2.11.2 HART

Active

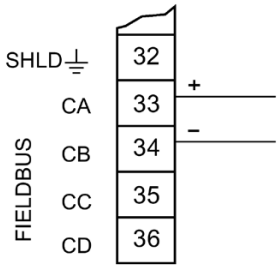

Passive

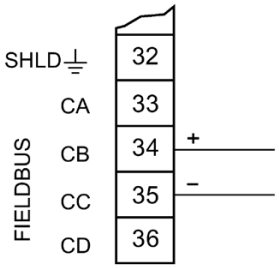

For **Active** HART connection (using LT500 integral power supply), connect terminals 33 and 34.

For **Passive** HART connection (using external power supply), connect terminals 34 and 35.

For more information, consult the mA output parameters (Current output (HART) (2.4.1) (Page 229)) in the parameter assignment section.

Typical PLC configuration with Active HART connection

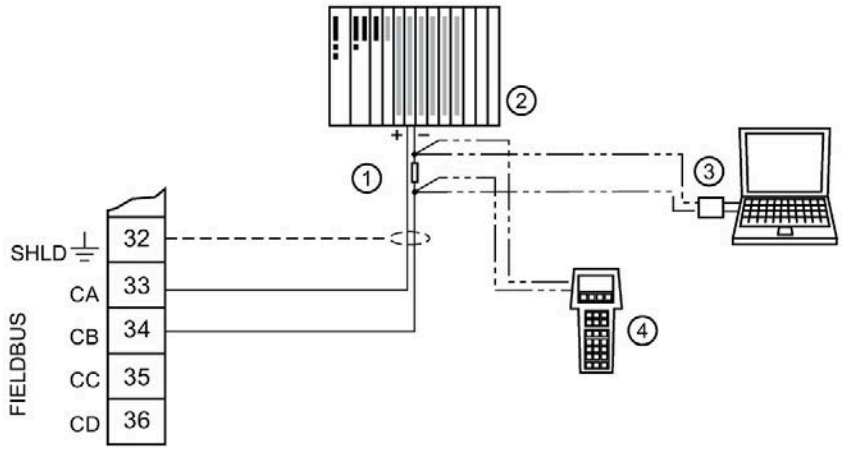

① HART resistor [1)]
② PLC [2)]
③ HART modem
④ HART handheld communicator

Typical PLC configuration with Passive HART connection

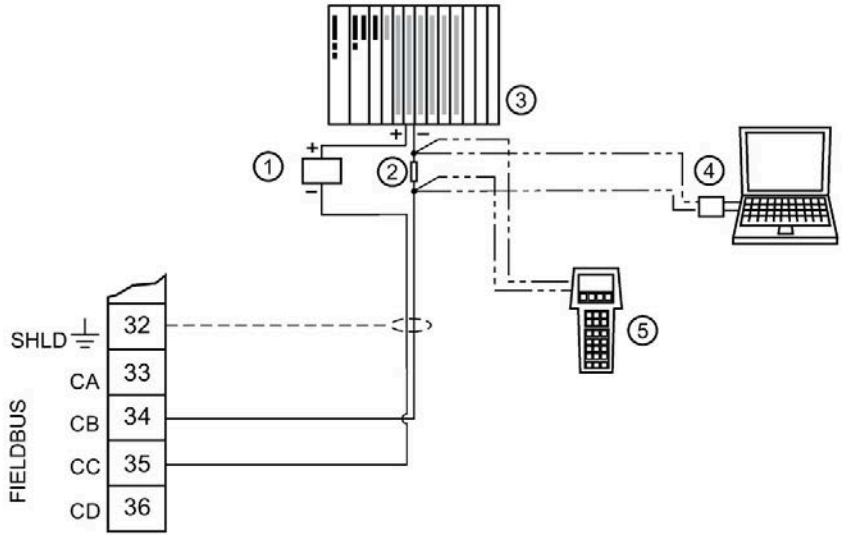

① DC power supply (14 to 30 V)
② HART resistor [1)]
③ PLC [2)]
④ HART modem
⑤ HART handheld communicator

[1)] The nominal value for the HART resistor is 250 Ohm. For more information see application guide "Working with HART", which can be downloaded from the product page of our website. Go to: Product page (www.siemens.com/sitransLT500) then under Support, click Application Guides.

[2)] Depending on the system design, the power supply may be separate from the PLC, or integral to it.

6.2.11.3 Modbus RTU

EIA-RS485 point-to-point connection to Modbus RTU master

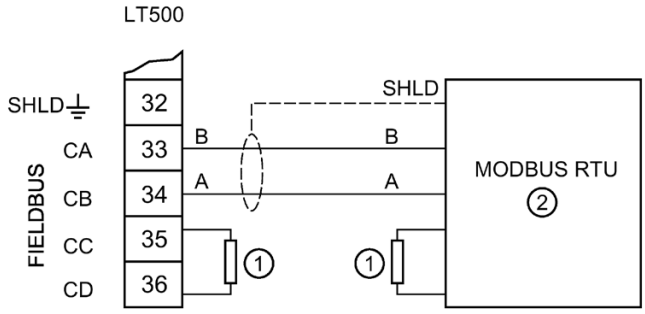

① Termination resistors
② Modbus RTU master

EIA-RS485 multidrop connection to a Modbus RTU master

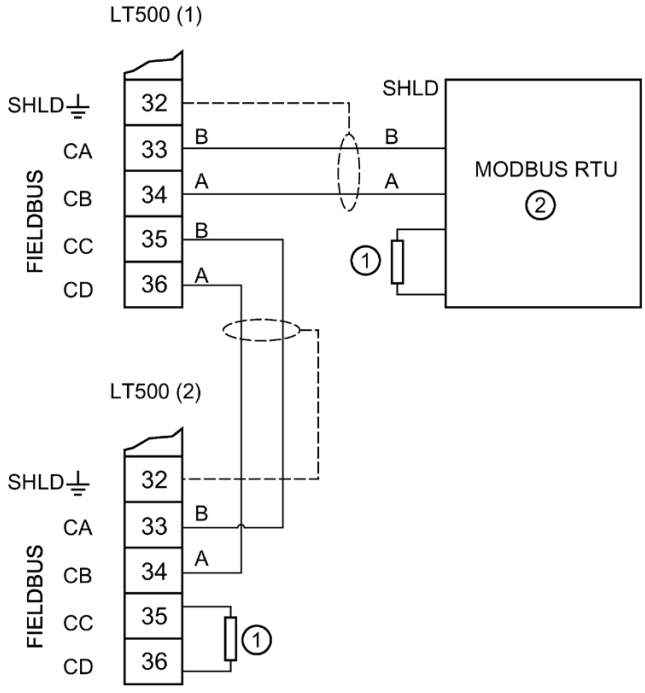

① Termination resistors
② Modbus RTU master

Note

Termination resistors

Termination resistors are typically 120R, however check the EIA-RS485 guidelines for more information.

Note

Cable type

Use cable type Belden 9841 or equivalent.

6.2.11.4 PROFIBUS PA/DP

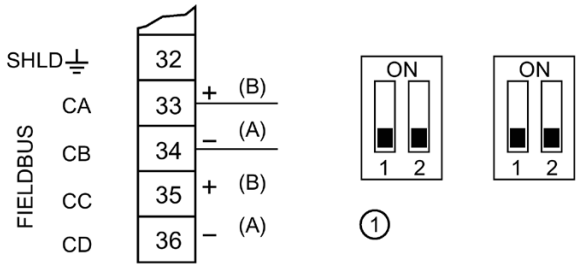

① Termination for Profibus DP (dip switches on Profibus DP card only, normally set in OFF position as shown here)
Termination for Profibus PA to be provided externally.

+ - Profibus PA connections

A B Profibus DP connections

Note

Cable requirements

It is recommended to use cable type A for both Profibus DP and Profibus PA, however Profibus DP and Profibus PA cables have different characteristics so the Profibus DP cable should not be used for Profibus PA, and vice versa.

6.2.11.5 PROFINET

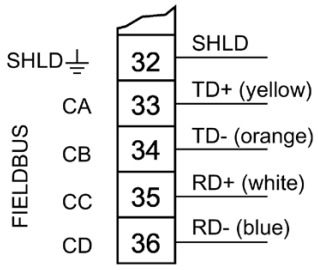

Commissioning 7

7.1 Basic safety notes

DANGER

Toxic gases and liquids

Danger of poisoning when venting the device: if toxic process media are measured, toxic gases and liquids can be released.

- Before venting ensure that there are no toxic gases or liquids in the device, or take the appropriate safety measures.

WARNING

Hazardous contact voltage

Risk of injury through hazardous contact voltage when the device is open or not completely closed.

The degree of protection specified on the nameplate or in Technical specifications (Page 398) is no longer guaranteed if the device is open or not properly closed.

- Make sure that the device is securely closed.

7.2 General requirements

Before commissioning it must be checked that:

- The device has been installed and connected in accordance with the guidelines provided in Installing/mounting (Page 27) and Connecting (Page 38).
- The device meets the local governing codes and good engineering practises for use in a critical application with applicable backup systems and alarms.

7.3 Local operation

The device is built for easy operation, making it possible to be commissioned quickly. Its parameters are menu-driven and can be modified through local operation, using the display and buttons, also known as the Human Machine Interface (HMI).

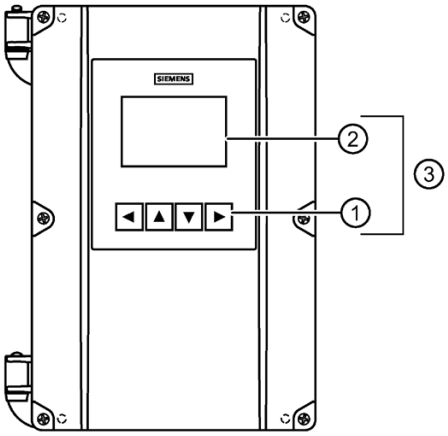

① Local buttons
② Graphical display
③ Local operation (HMI)

For details on how to use the interface, see Local display (HMI) (Page 103).

Note

Output remains active

While the device is being configured, the output remains active and continues to respond to changes in the process.

Note

Local display timeout

If no button is pressed for 10 minutes, display switches to operation view. If parameter "Backlight" is set to "Auto", display backlight goes off automatically 30 seconds after the last button press.

7.4 Device startup

Condition

- The following have been reviewed: Basic safety notes (Page 52).
- Device has been properly installed and connected, including the connection of any remote sensors.

Procedure

1. Power-on the device.
   For an initial startup, prompts for each of the following steps appear after power-on.
2. Set the language.
   The first time the device is configured, you will be prompted to set the language. The parameter "Language" always appears in English. To change the language again (after initial setup), see parameter Language (6) (Page 356).
3. Set the date and time.
   The correct date and time should be set prior to configuring the device.
4. Run the "Quick commissioning wizard" or accept the default values of the device.
   Essential parameters should be considered before using the device for the first time.
   - Choose "Yes" (recommended) to start the "Quick commissioning" wizard.
   - Choose "No", you accept the default values of the device (no sensors are configured). The next HMI view will be the operation view 1.

For any subsequent startup, after power-on, the device automatically starts in operation view. A transition screen showing first the Siemens logo and then the current firmware revision of the product is displayed while the first measurement is being processed.

- If configured, measurement values in operation view will show as dashes (----) during the startup process until a valid measurement is obtained from remote sensors.
- Measurement values in operation view will also shows dashes (----) when:
  - Level difference or Level average is configured, but one of the remote sensors is disabled,
  - A process value on point 2 is configured, but the device is a single-point version.

Before initiating a Quick start wizard to configure the device, you may wish to gather the necessary parameter values. Parameter configuration charts that list all parameters and available options for each application type are available on our website.

Go to Product page (www.siemens.com/sitransLT500).

Click "Support > Application Guides".

Record data and select from options on the chart that apply to your application, then with this data on hand, complete the quick start wizards.

7.5 Local commissioning

7.5.1 Wizard order

Procedure

The quick start wizards provide an easy step-by-step procedure to help configure the device for various applications. We recommend that configuration is done in the following order:

1. First, run the appropriate "Quick commissioning" wizard for your application (Level, Space, Distance, Volume, Volume flow).
2. Set up pumps (if applicable) via the "Pump control" wizard.
3. Configure control relays (if applicable) via the "Basic control" wizard.
4. Configure alarms (if applicable) via the "Alarm" wizard.
5. Configure totalizers and samplers (if applicable) referencing the respective parameters [see Parameter assignment (Page 193)].

It is important that alarms and other controls are configured last to avoid pump relay assignments being overridden by the "Quick commissioning" wizard.

Refer to Level application example (Page 100) or Volume flow application example (Page 101) for illustration examples. For the complete list of parameters, refer to Parameter assignment (Page 193).

7.5.2 Wizards

7.5.2.1 Wizard overview

Note

Important information regarding the use of commissioning wizard

- A reset to defaults should be performed before running "Quick commissioning" wizard if the device has been used in a previous application. See Restore ordered configuration (3.12.8) (Page 330).
- Settings for quick commissioning wizard are inter-related and changes apply only after "Apply?" is set to "Yes" in final step.
  - **Exception: All local units are set immediately in the wizard, even if the wizard is cancelled in the final step.**
- Do not use quick commissioning wizard to modify individual parameters. (See instead chapter Parameter assignment (Page 193).)
  Perform customization for your application only *after* "Quick commissioning" wizard has been completed.

Note

Parameter settings properly stored

In order to ensure parameter settings are properly stored in the device and to the memory card (if data logging is enabled), wait 30 seconds after any configuration change before removing power from the device.

1. From initial power up of device, after setting the language and date/time, you will be prompted to run the quick commissioning wizard. To run the wizard if this is not the initial power up, press ▶ from operation view.
2. Press ▶ to enter the "Quick start" menu, and again to start the "Quick commissioning" wizard. After reading what the wizard does in step one, press ▶ to choose a measurement point (appears only on a dual-point device), then the application for this point: Level, Space, Distance, Volume, or Volume flow.
3. Configure each parameter per step, then select "Next" to proceed. In the final step, when asked to "Apply?", choose "Yes" to save changes.
4. Next, configure a second measurement point, or "Exit" the wizard. After exiting the wizard, press ◀ button twice to return to operation view.

The wizard illustrations in this section show an overview of each commissioning wizard and of the buttons used to navigate through the wizards.

In the upper left corner of each view, the wizard name appears, followed by each step name. In the upper right corner, the view number is shown.

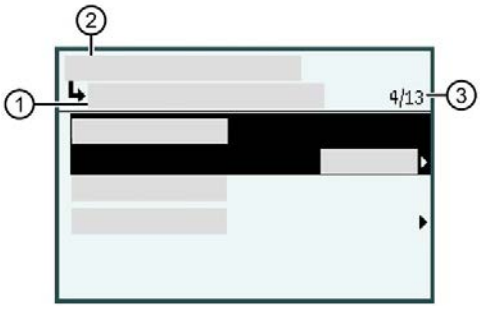

① Step name/Parameter name, e.g. "Units"

② Wizard name, e.g. "Quick commissioning"

③ View number/Total views in wizard, e.g. 4th view of 13

A wizard provides an easy step-by-step procedure to guide you through a quick setup of various parameters.

The following Quick start wizards are available:

- Quick commissioning
- Pump control
- Basic control
- Alarms

Use the ▲ and ▼ buttons to highlight the desired HMI wizard and press the ▶ button to enter the wizard.

The first view in each wizard (About) is a description of which settings/actions can be performed using the specific wizard.

The last view in each wizard (Apply?) allows user to apply selected settings.

Note

Parameter visibility

A full list of available parameters and settings for each are shown in the manual. However, some parameters and settings may not appear on the device, as visibility is based on the application and configuration selected.

Button	Function
◀	Leave menu without saving changes
▲	Scroll up in list of options
▼	Scroll down in list of options
▶	Select option. Confirm selection and save setting.

With the successful completion of each quick commissioning wizard, the following are set:

- Units set in the wizard are applied to device display and fieldbus
- Sensor damping is set per wizard parameter "Response rate", and all other damping (local display, current output, fieldbus) is set to zero (disabled).
- Process value per application (Level, Space, Distance, Volume, Volume flow) is set as the source for:
  - "Current output (HART)" - channel 1 (CH1) (if HART communication card installed), and "Current output 1" - channel 2 (CH2) for measurement point 1
  - "Current output 2" - channel 3 (CH3) for measurement point 2
- Process value per application are used in operation view: "View 1" and "View 3"
- Additionally, for Volume flow application:
  - Volume flow is used as the source, and sets units for totalizers

    - "Totalizer 1" (TOT1) and "Totalizer 2" (TOT2) on measurement point 1

    - "Totalizer 3" (TOT3) and "Totalizer 4" (TOT4) on measurement point 2
  - "View 2" uses Head as the source for "Totalizer 1" (TOT1)
  - "View 4" uses Head as the source for "Totalizer 3" (TOT3)

A successfully completed pump control, basic control or alarms wizard does not set any views, or other parameters, external to the wizard.

Note

Damping via commissioning wizard vs menu parameters

Upon successful completion of the wizard:

- Sensor damping is set on the supported remote sensor by wizard parameter "Response rate".
- All other damping (local display, current output, fieldbus) is set to zero (disabled).

To effect damping on a generic sensor (that is not pre-configured), or to set further damping of the device outputs, use menu parameter "Damping value" (per local display, current output, fieldbus), after completing the wizard.

- Note that this additional damping will compound the effect of any damping set by parameter "Response rate".

7.5.2.2 Quick commissioning

Quick commissioning wizards via HMI

Procedure

Quick commissioning wizard

The SITRANS LT500 provides several quick commissioning wizards that can be used for various applications.

The initial wizard steps are common for all application types. Subsequent wizard parameters will vary depending on the application you choose. For the purpose of documenting, three separate lists follow. These lists include the wizard parameters available to commission each application type (see links below).

1. From **operation view**, press ▶ button to enter **parameter view**. The first level menu "Quick start" will display. Press ▶ button to enter this menu.
2. Press ▶ button again to enter "Quick commissioning" wizard. Press ▶ button to enter **edit view** for each parameter.

   In the wizard, when there is more than one parameter per step, press ▶ button to configure each parameter, then press ▼ button to navigate to "Next" step.
3. Setup each measurement point to configure it for an application type (Level, Space, Distance, Volume, Volume flow).

   Subsequent wizard parameters will vary depending on the application you choose. See links below to step you through the wizard appropriate to your application.
4. Select "Yes" to "Apply?". This confirms all parameter changes as the final step in the quick commissioning wizard.
   For a dual-point device, complete the wizard for the second measurement point, then press "Exit" to return to **parameter view**.
5. Press ◀ button two times to return to **operation view**.

For more information about commissioning a Level, Space, or Distance application, go to Quick commissioning: Level/Space/Distance (Page 63).

For more information about commissioning a Volume application, go to Quick commissioning: Volume (Page 68).

For more information about commissioning a Volume flow application, go to Quick commissioning: Volume flow (Page 75).

Note

Important information regarding the use of commissioning wizard

- A reset to defaults should be performed before running "Quick commissioning wizard" if the device has been used in a previous application. See Restore ordered configuration (3.12.8) (Page 330).
- Settings for quick commissioning wizard are inter-related and changes apply only after "Apply?" is set to 'Yes' in final step.
- Do not use quick commissioning wizard to modify individual parameters. (See instead chapter Parameter assignment (Page 193).)
  Perform customization for your application only *after* "Quick commissioning wizard" has been completed.

Note

Output remains active

While the device is being configured, the output remains active and continues to respond to changes in the process.

Quick Commissioning wizard (menu item 1.1)

The Quick commissioning wizard will guide you through configuration of parameters essential for your application. You configure parameters essential for your application by selecting the configuration path and sub-wizards appropriate for your application.

Step: Select application

With a dual-point device, you will be prompted to set up each point individually, otherwise set the type of measurement required for the application.

This is done in the 'Select application' step.

The options available are:

- Level
- Space
- Distance
- Volume
- Volume flow

The remaining parameters to be configured in the wizard will depend on the application selected, and on the type of sensor connected.

Note

Dual-point device applications

An application setting of "Level average" or "Level difference" is only possible with a dual-point version, and must be set outside of the commissioning wizard.

- First, complete the commissioning wizard for a Level application on both points, then set the process value:
  - For the configured current output to follow "Level average" or "Level difference"

    For example, see Process value (2.4.1.4) (Page 229) for "Current output (HART)"
  - For a pump control application based on "Level average" or "Level difference"

    For example, see Process value (2.5.4.2) (Page 251) under menu "Application>Pump control"
- Next, configure the operation views to display "Level average" or "Level difference"

  For example, see 1st value (2.8.5.2) (Page 272) for "View 1" under menu "Local display"

Quick commissioning: Level/Space/Distance

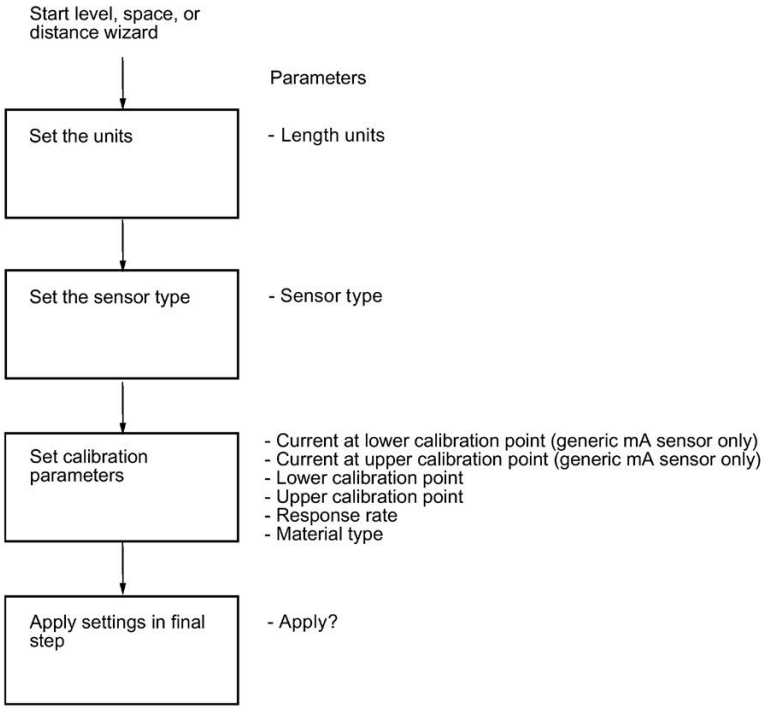

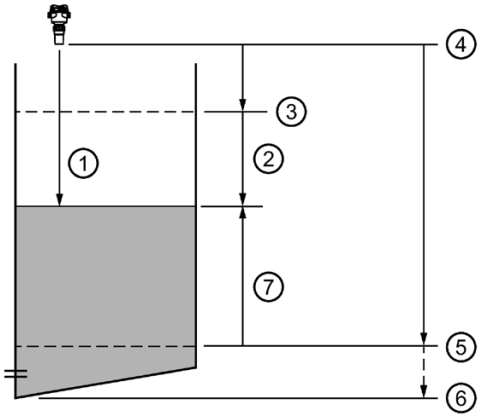

① Distance
② Space
③ Upper calibration point
④ Sensor reference point
⑤ Lower calibration point
⑥ Far range
⑦ Level

Setting	Description	Reference point
Level	Height of material	Lower calibration point (process empty level)
Space	Distance to material surface	Upper calibration point (process full level)
Distance		Sensor reference point

Step: Length units

Note

Local units set immediately by wizard

All local units are set immediately in wizard when "Units" step completed.

- Units are an exception to the general rule for all other wizard settings: Settings for quick commissioning wizard are inter-related and changes apply only after "Apply?" is set to "Yes" in final step.
- Units for local operation are applied even if wizard is cancelled in final step. Therefore, re-run the wizard if a change must be made to units setting.

Length units

Sets the length units applied for local operation and the communication interface, on measurement point 1 and 2.

Setting	• m (meters) • cm (centimeters) • mm (millimeters) • ft (feet) • in (inches)
Default	m

Note

Process value too large to display

In some cases, it is possible that the process value is too large to show on the local display, "**#####**" will show instead.

If this occurs in a typical application:

- Adjust parameter "Units" so that a smaller value can be shown, e.g. use meters instead of millimeters.

If this occurs in a custom application:

- Adjust parameter "Custom units" so that a smaller value can be shown, e.g. use tons instead of pounds.
- Note that a change to custom units also requires a manual scaling adjustment.

Step: Sensor type

Sensor type

Sets type of sensor connected to sensor input.

Setting	• SITRANS LR110 • SITRANS LR120 • SITRANS Probe LU240 • Generic (4 ... 20 mA)
Default	The default is set to the connected sensor, or "Generic (4 ... 20 mA)" if no sensor is connected.

Note

Damping via wizard with supported remote sensor vs generic sensor

- Damping of process values in the supported remote sensor is set based on wizard parameter "Response rate".
- If a generic sensor is used, damping must be set in the sensor (pre-configured), or by using device parameter "Damping value" to effect the outputs (local display, current output, fieldbus) after completing the wizard.

Whenever the sensor (physically connected to the device) is replaced by another, a diagnostic "Sensor has changed" is shown as confirmation that the physical change of sensor was successful.

Step: Calibration

Current at lower calibration point

Sets loop current produced by the generic mA sensor when material is at lower calibration point.

Setting	4 ... 20 mA
Default	4 mA

This parameter is only visible when a generic mA sensor is connected.

Current at upper calibration point

Sets loop current produced by the generic mA sensor when material is at upper calibration point.

Setting	4 ... 20 mA
Default	20 mA

This parameter is only visible when a generic mA sensor is connected.

Lower calibration point

Sets distance from sensor reference point to lower calibration point: usually process empty level.

Setting	Sensor specific
Default	6 m

Upper calibration point

Sets distance from sensor reference point to upper calibration point: usually process full level.

Setting	Sensor specific
Default	0 m

Response rate

Sets reaction speed of device to measurement changes in target range.

Use a setting just faster than the maximum filling or emptying rate (whichever is faster).

Setting	Slow	0.1 m/min (fill/empty rate)
	Medium	1.0 m/min (fill/empty rate)
	Fast	10.0 m/min (fill/empty rate)
Default	Slow	

Note

Rate parameters

Alarm and limit parameters for fill and empty rates work in conjunction, and are affected by parameter "Response rate" (set in the "Quick commissioning" wizard). The rate parameters automatically adjust when parameter "Response rate" is altered, but any changes made to the rate parameters following the completion of the wizard will supersede the response rate setting. See menu Rate (2.1.8) (Page 200).

For more information see Measurement response (Page 414).

Material type

Used to optimize performance based on material type.

Setting	• Liquid • Solid
Default	Liquid

This parameter does not appear in the quick commissioning wizard when a generic mA sensor is connected.

Step: Apply?

Apply?

Applies settings as last step in wizard.

Setting	Yes	Wizard completes and settings are applied.
	No	Returned to start of wizard.
Default	No	

Quick commissioning: Volume

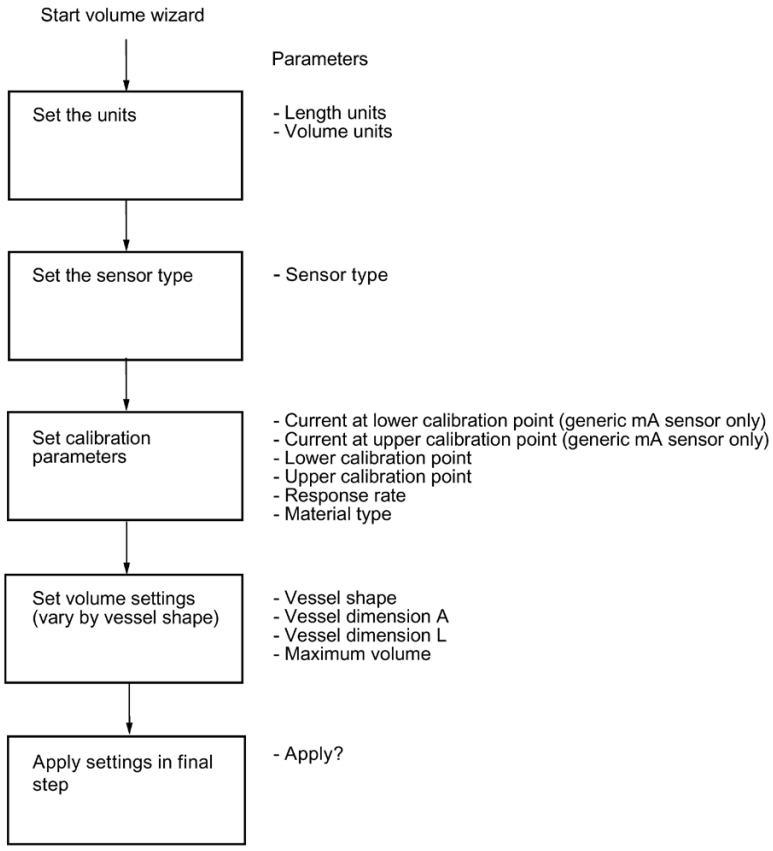

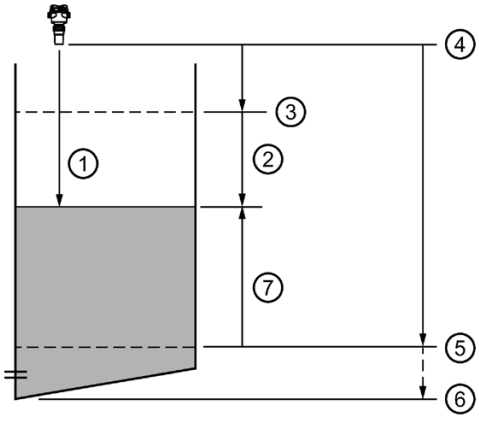

① Distance
② Space
③ Upper calibration point
④ Sensor reference point
⑤ Lower calibration point
⑥ Far range
⑦ Level

Setting	Description	Reference point
Volume	Volume of material in Volume units (based on level)	Lower calibration point

Step: Units

Note

Local units set immediately by wizard

All local units are set immediately in wizard when "Units" step completed.

- Units are an exception to the general rule for all other wizard settings: Settings for quick commissioning wizard are inter-related and changes apply only after "Apply?" is set to "Yes" in final step.
- Units for local operation are applied even if wizard is cancelled in final step. Therefore, re-run the wizard if a change must be made to units setting.

Length units

Sets the length units applied for local operation and the communication interface, on measurement point 1 and 2.

Setting	• m (meters) • cm (centimeters) • mm (millimeters) • ft (feet) • in (inches)
Default	m

Volume units

Sets the volume units applied for local operation and the communication interface, on measurement point 1 and 2.

Setting	• l (liters) • hl (hectoliters) • m^3 (cubic meters) • gal (US gallons) • gal (UK) (imperial gallons) • bbl (US) (31.5 gallon barrels) • bbl-beer (31 US gallon barrels)	• bbl (42 US gallon barrels) • in^3 (cubic inches) • ft^3 (cubic feet) • yd^3 (cubic yards) • bu (bushels) • Custom
Default	l (liters)	

Note

Process value too large to display

In some cases, it is possible that the process value is too large to show on the local display, "**#####**" will show instead.

If this occurs in a typical application:

- Adjust parameter "Units" so that a smaller value can be shown, e.g. use meters instead of millimeters.

If this occurs in a custom application:

- Adjust parameter "Custom units" so that a smaller value can be shown, e.g. use tons instead of pounds.
- Note that a change to custom units also requires a manual scaling adjustment.

Step: Sensor type

Sensor type

Sets type of sensor connected to sensor input.

Setting	• SITRANS LR110 • SITRANS LR120 • SITRANS Probe LU240 • Generic (4 ... 20 mA)
Default	The default is set to the connected sensor, or "Generic (4 ... 20 mA)" if no sensor is connected.

Note

Damping via wizard with supported remote sensor vs generic sensor

- Damping of process values in the supported remote sensor is set based on wizard parameter "Response rate".
- If a generic sensor is used, damping must be set in the sensor (pre-configured), or by using device parameter "Damping value" to effect the outputs (local display, current output, fieldbus) after completing the wizard.

Whenever the sensor (physically connected to the device) is replaced by another, a diagnostic "Sensor has changed" is shown as confirmation that the physical change of sensor was successful.

Step: Calibration

Current at lower calibration point

Sets loop current produced by the generic mA sensor when material is at lower calibration point.

Setting	4 ... 20 mA
Default	4 mA

This parameter is only visible when a generic mA sensor is connected.

Current at upper calibration point

Sets loop current produced by the generic mA sensor when material is at upper calibration point.

Setting	4 ... 20 mA
Default	20 mA

This parameter is only visible when a generic mA sensor is connected.

Lower calibration point

Sets distance from sensor reference point to lower calibration point: usually process empty level.

Setting	Sensor specific
Default	6 m

Upper calibration point

Sets distance from sensor reference point to upper calibration point: usually process full level.

Setting	Sensor specific
Default	0 m

Response rate

Sets reaction speed of device to measurement changes in target range.

Use a setting just faster than the maximum filling or emptying rate (whichever is faster).

Setting	Slow	0.1 m/min (fill/empty rate)
	Medium	1.0 m/min (fill/empty rate)
	Fast	10.0 m/min (fill/empty rate)
Default	Slow	

Note

Rate parameters

Alarm and limit parameters for fill and empty rates work in conjunction, and are affected by parameter "Response rate" (set in the "Quick commissioning" wizard). The rate parameters automatically adjust when parameter "Response rate" is altered, but any changes made to the rate parameters following the completion of the wizard will supersede the response rate setting. See menu Rate (2.1.8) (Page 200).

For more information see Measurement response (Page 414).

Material type

Used to optimize performance based on material type.

Setting	• Liquid • Solid
Default	Liquid

This parameter does not appear in the quick commissioning wizard when a generic mA sensor is connected.

Step: Volume settings

Vessel shape

Sets vessel shape, and allows device to calculate volume in addition to level.

	Display name/description	Vessel shape	Other parameter settings required
Setting	Linear vessel	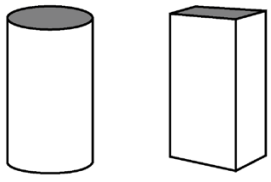	Maximum volume
	Conical bottom vessel	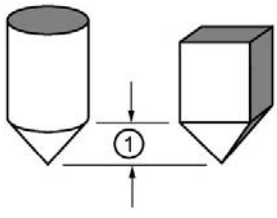	Maximum volume, Vessel dimension A

	Display name/description	Vessel shape	Other parameter settings required
	Parabolic bottom vessel	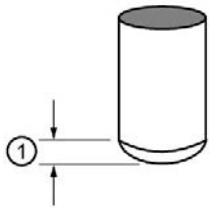	Maximum volume, Vessel dimension A
	Half sphere bottom vessel	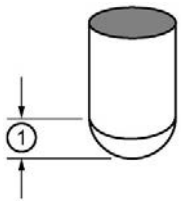	Maximum volume, Vessel dimension A
	Flat sloped bottom vessel	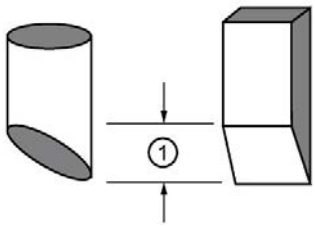	Maximum volume, Vessel dimension A
	Cylinder vessel	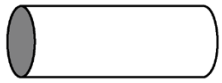	Maximum volume
	Parabolic ends vessel	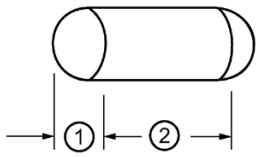	Maximum volume, Vessel dimension A, Vessel dimension L
	Sphere vessel	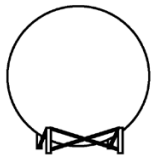	Maximum volume
	Custom	Use for custom volume application.	
Default	Linear vessel		Maximum volume

① Vessel dimension A ② Vessel dimension L

Vessel dimension A

Sets height of vessel bottom when bottom is conical, parabolic, half spherical, or flat sloped. If horizontal parabolic ends vessel, sets depth of end.

Setting	0 ... 99999
Default	0 m

See Vessel shape (2.5.1.1) (Page 248) for illustration.

Vessel dimension L

Sets length of cylindrical section of horizontal parabolic ends vessel.

Setting	0 ... 99999
Default	0 m

See Vessel shape (2.5.1.1) (Page 248) for illustration.

Maximum volume

Sets the maximum volume of the vessel.

Enter the vessel volume corresponding to the upper calibration point.

Setting	0 ... 99999
Default	0 liters

Step: Apply?

Apply?

Applies settings as last step in wizard.

Setting	Yes	Wizard completes and settings are applied.
	No	Returned to start of wizard.
Default	No	

Quick commissioning: Volume flow

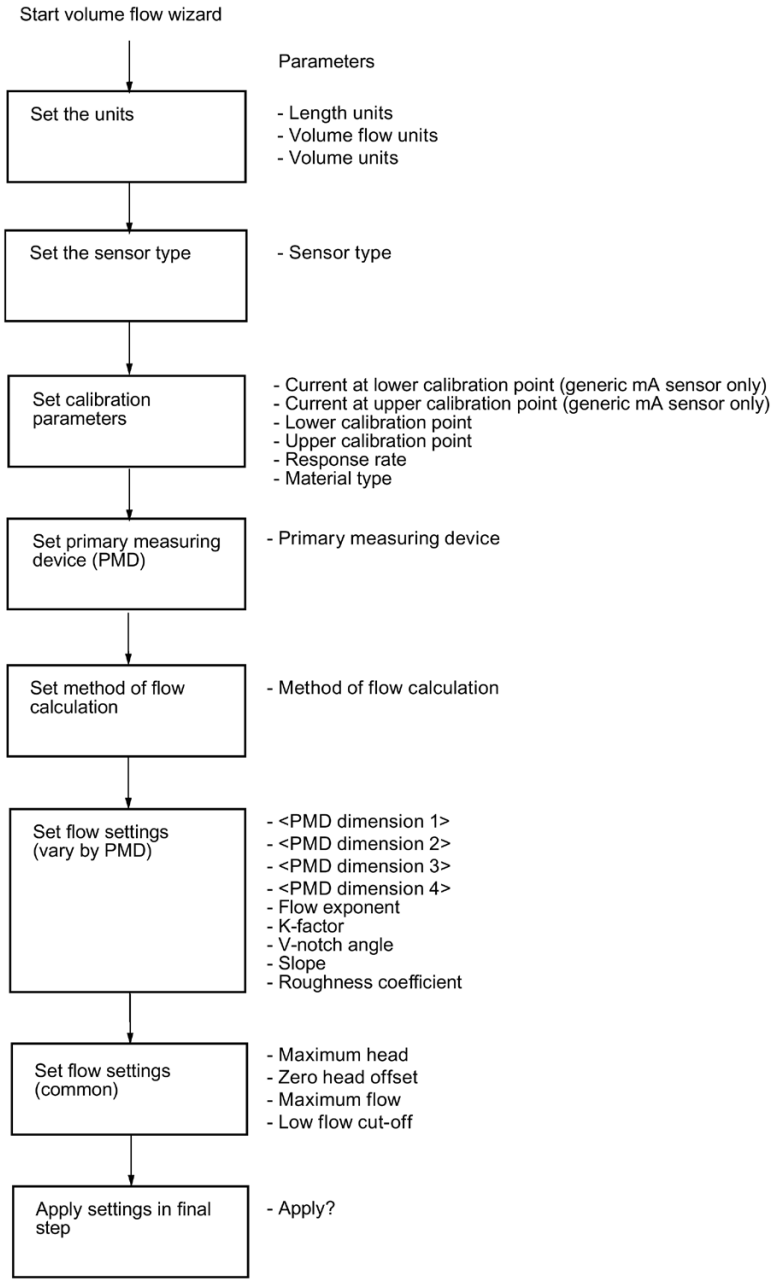

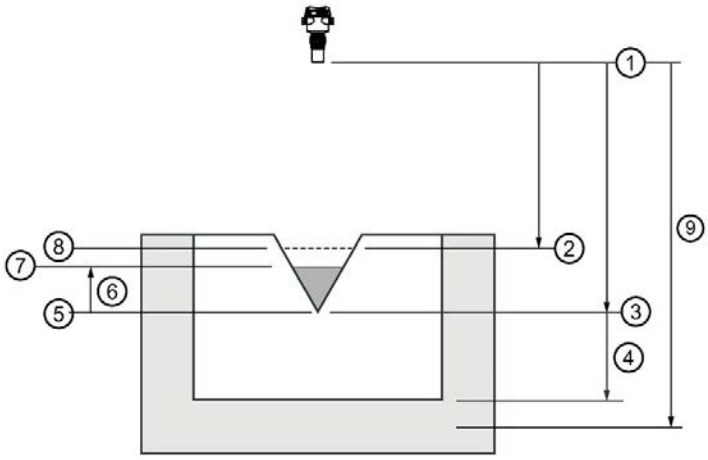

① Sensor reference point
② Upper calibration point
③ Lower calibration point
④ Zero head offset
⑤ Zero head
⑥ Head
⑦ Material surface
⑧ Maximum head/Maximum flow
⑨ Far range

Setting	Description	Reference point
Volume flow	Flow rate in an open channel in Volume flow units	Zero head, zero flow

Step: Units

Note

Local units set immediately by wizard

All local units are set immediately in wizard when "Units" step completed.

- Units are an exception to the general rule for all other wizard settings: Settings for quick commissioning wizard are inter-related and changes apply only after "Apply?" is set to "Yes" in final step.
- Units for local operation are applied even if wizard is cancelled in final step. Therefore, re-run the wizard if a change must be made to units setting.

Length units

Sets the length units applied for local operation and the communication interface, on measurement point 1 and 2.

Setting	• m (meters) • cm (centimeters) • mm (millimeters) • ft (feet) • in (inches)
Default	m

Volume flow units

Sets the volume flow units applied for local operation and the communication interface, on measurement point 1 and 2.

Setting	• l/s (liters per second) • l/min (liters per minute) • l/h (liters per hour) • l/d (liters per day) • Ml/d (megaliters per day) • hl/s (hectoliters per second) • hl/min (hectoliters per minute) • hl/h (hectoliters per hour) • hl/d (hectoliters per day) • m³/s (cubic meters per second) • m³/min (cubic meters per minute) • m³/h (cubic meters per hour) • m³/d (cubic meters per day) • Mm³/d (million cubic meters per day) • gal/s (US gallons per second) • gal/min (US gallons per minute) • gal/h (US gallons per hour) • gal/d (US gallons per day) • Mgal/d (US megagallons per day) • gal (UK)/s (imperial gallons per second) • gal (UK)/min (imperial gallons per minute) • gal (UK)/h (imperial gallons per hour) • gal (UK)/d (imperial gallons per day) • bbl-beer/s (31 US gallon barrels per second) • bbl-beer/min (31 US gallon barrels per minute) • bbl-beer/h (31 US gallon barrels per hour) • bbl-beer/d (31 US gallon barrels per day) • bbl/s (42 US gallon barrels per second) • bbl/min (42 US gallon barrels per minute)	• bbl/h (42 US gallon barrels per hour) • bbl/d (42 US gallon barrels per day) • kbbl/d (thousand 42 US gallon barrels per day) • Mbbl/d (million 42 US gallon barrels per day) • bbl (US)/s (31.5 US gallon barrels per second) • bbl (US)/min (31.5 US gallon barrels per minute) • bbl (US)/h (31.5 US gallon barrels per hour) • bbl (US)/d (31.5 US gallon barrels per day) • ft³/s (cubic feet per second) • ft³/min (cubic feet per minute) • ft³/h (cubic feet per hour) • ft³/d (cubic feet per day) • Mft³/d (million cubic feet per day) • AF/min (acre-feet per minute) • AF/h (acre-feet per hour) • AF/d (acre-feet per day) • in³/s (cubic inches per second) • in³/min (cubic inches per minute) • in³/h (cubic inches per hour) • in³/d (cubic inches per day) • yd³/s (cubic yards per second) • yd³/min (cubic yards per minute) • yd³/h (cubic yards per hour) • yd³/d (cubic yards per day) • bu/s (bushels per second) • bu/min (bushels per minute) • bu/h (bushels per hour) • bu/d (bushels per day) • custom
Default	l/s (liters per second)	

Volume units

Sets the volume units for totalizers, applied for local operation and the communication interface.

- For measurement point 1, volume units are set for totalizer 1 and 2.
- For measurement point 2, volume units are set for totalizer 3 and 4.

Setting	• l (liters) • hl (hectoliters) • m^3 (cubic meters) • gal (US gallons) • gal (UK) (imperial gallons) • bbl (US) (31.5 gallon barrels) • bbl-beer (31 US gallon barrels)	• bbl (42 US gallon barrels) • in^3 (cubic inches) • ft^3 (cubic feet) • yd^3 (cubic yards) • bu (bushels) • Custom
Default	l (liters)	

Note

Process value too large to display

In some cases, it is possible that the process value is too large to show on the local display, "**#####**" will show instead.

If this occurs in a typical application:

- Adjust parameter "Units" so that a smaller value can be shown, e.g. use meters instead of millimeters.

If this occurs in a custom application:

- Adjust parameter "Custom units" so that a smaller value can be shown, e.g. use tons instead of pounds.
- Note that a change to custom units also requires a manual scaling adjustment.

Step: Sensor type

Sensor type

Sets type of sensor connected to sensor input.

Setting	• SITRANS LR110 • SITRANS LR120 • SITRANS Probe LU240 • Generic (4 ... 20 mA)
Default	The default is set to the connected sensor, or "Generic (4 ... 20 mA)" if no sensor is connected.

Note

Damping via wizard with supported remote sensor vs generic sensor

- Damping of process values in the supported remote sensor is set based on wizard parameter "Response rate".
- If a generic sensor is used, damping must be set in the sensor (pre-configured), or by using device parameter "Damping value" to effect the outputs (local display, current output, fieldbus) after completing the wizard.

Whenever the sensor (physically connected to the device) is replaced by another, a diagnostic "Sensor has changed" is shown as confirmation that the physical change of sensor was successful.

Step: Calibration

Current at lower calibration point

Sets loop current produced by the generic mA sensor when material is at lower calibration point.

Setting	4 ... 20 mA
Default	4 mA

This parameter is only visible when a generic mA sensor is connected.

Current at upper calibration point

Sets loop current produced by the generic mA sensor when material is at upper calibration point.

Setting	4 ... 20 mA
Default	20 mA

This parameter is only visible when a generic mA sensor is connected.

Lower calibration point

Sets distance from sensor reference point to lower calibration point: usually process empty level.

Setting	Sensor specific
Default	6 m

Upper calibration point

Sets distance from sensor reference point to upper calibration point: usually process full level.

Setting	Sensor specific
Default	0 m

Response rate

Sets reaction speed of device to measurement changes in target range.

Use a setting just faster than the maximum filling or emptying rate (whichever is faster).

Setting	Slow	0.1 m/min (fill/empty rate)
	Medium	1.0 m/min (fill/empty rate)
	Fast	10.0 m/min (fill/empty rate)
Default	Slow	

Note

Rate parameters

Alarm and limit parameters for fill and empty rates work in conjunction, and are affected by parameter "Response rate" (set in the "Quick commissioning" wizard). The rate parameters automatically adjust when parameter "Response rate" is altered, but any changes made to the rate parameters following the completion of the wizard will supersede the response rate setting. See menu Rate (2.1.8) (Page 200).

For more information see Measurement response (Page 414).

Material type

Used to optimize performance based on material type.

Setting	• Liquid • Solid
Default	Liquid

This parameter does not appear in the quick commissioning wizard when a generic mA sensor is connected.

Step: Primary measuring device

Primary measuring device (PMD)

Sets the type of primary measuring device (PMD) used.

Setting	• Exponential devices • Rectangular flume BS 3680/ISO 4373 • Round nose horizontal crest weir BS 3680/ISO 4373 • Trapezoidal flume BS 3680/ISO 4373 • U-flume BS 3680/ISO 4373 • Finite crest weir BS 3680/ISO 4373 • Thin plate rectangular weir BS 3680/ISO 4373 • Thin plate V-notch weir BS 3680/ISO 4373 • Rectangular weir contracted • Round pipe • Palmer-Bowlus flume • H-flume • Custom
Default	Exponential devices

If PMD is not listed, set to "Custom" and use a volume flow calculation. See Volume flow calculation (Page 420).

Step: Method of flow calculation

Method of flow calculation

Sets method of flow calculation.

Setting	• Absolute • Ratiometric
Default	Absolute

Set this parameter to "Ratiometric" only if the primary measuring device (PMD) supports ratiometric calculations. (Note that Palmer Bowlus Flume and H-Flume support ratiometric calculations only.) For more details on absolute and ratiometric calculations, see Method of flow calculation (Page 422).

Step: Flow settings (vary by PMD)

Note

Two parts to "Step: Flow settings" (vary by PMD)

Part 1 - The dimensions (one to four), based on the selected PMD, are set.

Part 2 - Other required flow settings, based on the selected PMD, are set.

Only the settings required for the selected PMD are visible in the wizard on the HMI. Refer to Primary measuring device (PMD) (2.5.6.1) (Page 258) for a full list of settings per PMD.

Step: Flow settings (common)

Maximum head (2.5.6.4.)

Sets the maximum head value associated with the PMD and works in conjunction with parameter "Maximum flow" for ratiometric calculations.

Setting	0 ... 9999999
Default	6 m

Zero head offset (2.5.6.7.)

Sets the difference (positive) between the lower calibration point and zero head (level at zero flow).

Setting	0 ... 9999999
Default	0 m

The value for this parameter is set automatically based on the configuration applied in the quick commissioning wizard.

Maximum flow (2.5.6.6.)

Sets the maximum flowrate associated with value in parameter "Maximum head".

Setting	0 ... 9999999
Default	100 l/s

Low flow cutoff (2.5.6.9.)

Sets the flow limit for low flow cut-off. Flow values below this limit are forced to zero.

Setting	0 ... 9999999
Default	0 l/s

Step: Apply?

Apply?

Applies settings as last step in wizard.

Setting	Yes	Wizard completes and settings are applied.
	No	Returned to start of wizard.
Default	No	

Note

Head calibration can improve accuracy

It is strongly recommended that a zero head calibration be performed after completion of the wizard to ensure best accuracy. See Zero head offset wizard (2.5.6.7) (Page 261).

7.5.2.3 Pump control

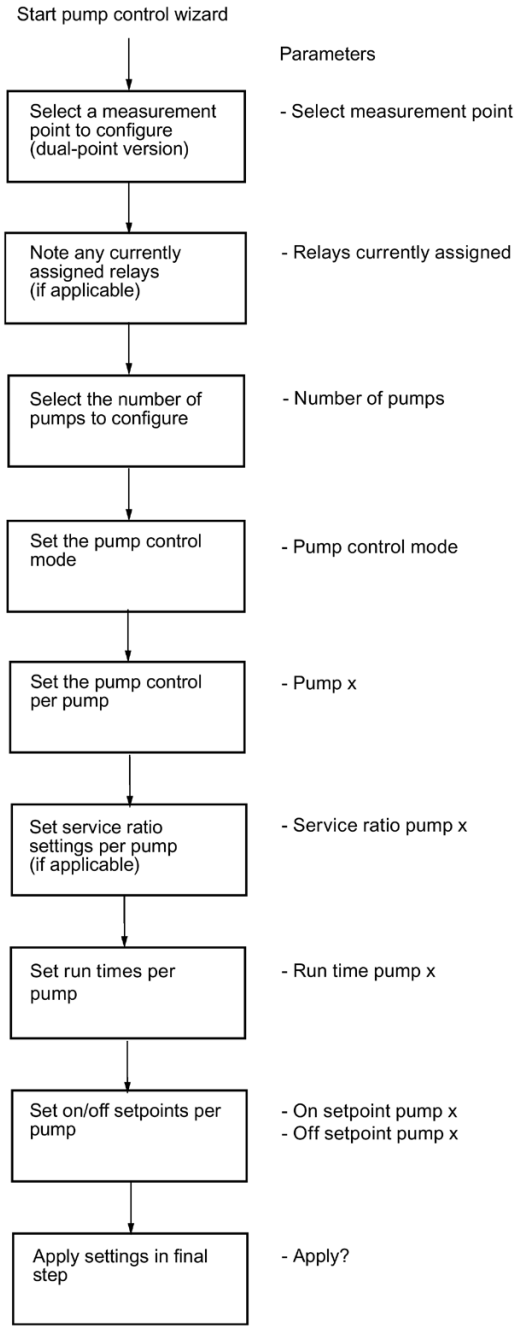

Step: About

Provides step-by-step procedure to configure the control of one or more pumps.

This is the first step in the wizard.

Step: Select measurement point

Select measurement point

Sets the measurement point to be configured for pump control function.

This step will not appear on a single-point device.

Setting	• Measurement point 1 • Measurement point 2 • Exit
Default	Measurement point 1

Step: Relays currently assigned

Relays currently assigned

Displays any relays that are currently configured for other applications, as a reference of relay availability for the pump control function.

This step does not appear if no relays are configured for other applications.

Step: Number of pumps

Number of pumps

Sets the number of pumps to configure.

Setting	• 1 • 2 • 3 • 4 • 5 • 6
Default	2

Step: Pump control mode

Pump control mode

Sets the control algorithm used to activate the relay.

Setting	• Alternate duty assist • Alternate duty backup • Service ratio duty assist • Service ratio duty backup • Fixed duty assist • Fixed duty backup
Default	Alternate duty assist

This step is only visible if previous step "Number of pumps" is set to a value greater than one.

Step: Pump control

Note

Step is repeated per pump

The parameters in this step will need to be set for each pump used in the application.

Pump 1

Sets relay assigned to pump.

Setting	• Relay output 1 • Relay output 2 • Relay output 3 • Relay output 4 • Relay output 5 • Relay output 6
Default	Not applicable

CAUTION

Relay conflicts

If relays are assigned to another application, notification is present at the start of the wizard, but assigned relays remain available here. If a pump is assigned in the wizard to one of these relays, the assignment from the wizard will be used.

- When wizard settings are applied in the final step, any relays configured by the pump control wizard are assigned as needed, including disabling another application if there is a relay conflict.
- If an assignment is made in error, continue to the end of the wizard and select "No" in the final step "Apply?". Then re-run the wizard. (Selecting "Yes" to apply the wizard settings in this scenario, means the application will be incorrect and pumps may be assigned to relays incorrectly.)

Step: Service ratios

Note

Step is repeated per pump

The parameter in this step will need to be set for each pump used in the application.

This step is only visible if pump control mode is set to "Service ratio duty assist" or "Service ratio duty backup".

Service ratio pump 1

Sets pump usage based on run time ratio rather than last pump used.

Setting	0 ... 255
Default	1

Step: Pump run times

Note

Step is repeated per pump

The parameter in this step will need to be set for each pump used in the application.

This step is only visible if pump control mode is set to "Service ratio duty assist" or "Service ratio duty backup".

Run time pump 1

Sets the amount of time the pump has been in operation.

Setting	hhhh: 0...99999 mm: 0...59
Default	0 h

Enter the run time of an existing pump to be used in this application. Leave as default of zero hours if using a new pump that has never run.

The value entered here is written to parameter "Runtime relay x" (found in menu "Pump control" (3.4.4.)), where 'x' refers to the relay assigned to the pump being configured here. If any value has been previously set in "Runtime relay x", it will be displayed here, and any value written by the wizard will supersede other values upon completion of the wizard.

Step: On/off setpoints

Note

Step is repeated per pump

The parameters in this step will need to be set for each pump used in the application.

Note

On/Off setpoints per application

The setpoints must be set correctly for the application:

- For a pump down application, *all* of the off setpoints must be less than *all* of the on setpoints,
- For a pump up application, *all* of the on setpoints must be less than *all* of the off setpoints.

On setpoint pump 1

Sets the level at which pump turns on.

Setting	-99999 ... 99999
Default	0 m

Off setpoint pump 1

Sets the level at which pump turns off.

Setting	-99999 ... 99999
Default	0 m

Step: Apply?

Apply?

Applies settings as last step in wizard.

Setting	Yes	Wizard completes and settings are applied.
	No	Returned to start of wizard.
Default	No	

7.5.2.4 Basic control

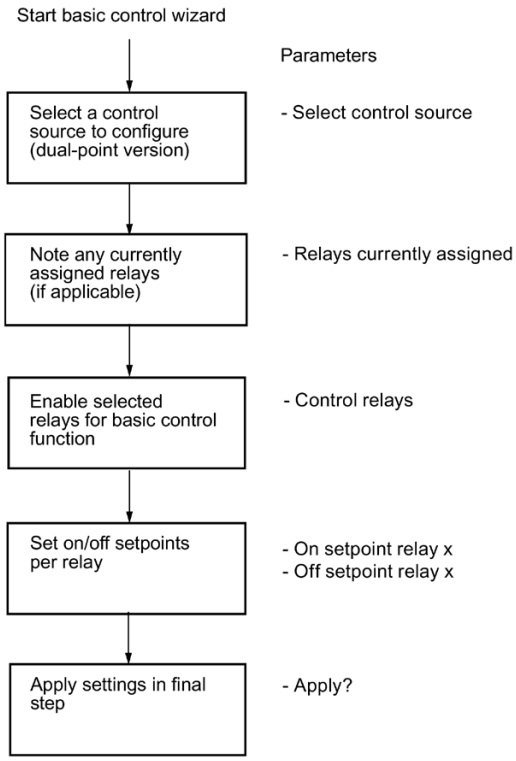

Step: About

Provides step-by-step procedure to configure the control of one or more relays based on a measurement.

This is the first step in the wizard.

Step: Select control source

Select control source

Sets the control source to be configured for a basic control application.

This step will not appear on a single-point device.

Setting	• Level (point 1) • Level (point 2) • Level difference • Level average • Exit
Default	Level (point 1)

Step: Relays currently assigned

Relays currently assigned

Displays any relays that are currently configured for other applications, as a reference of relay availability for the basic control function.

This step does not appear if no relays are configured for other applications.

Step: Control relays

Control relays

Enables selected relays for basic control function.

Deselecting an already programmed relay will disable it.

Setting	[ ] Relay output 1 [ ] Relay output 2 [ ] Relay output 3 [ ] Relay output 4 [ ] Relay output 5 [ ] Relay output 6
Default	[X] indicates enabled by default [ ] indicates disabled by default

Step: On/off setpoints

Note

Step is repeated per relay

The parameters in this step will need to be set for each relay used in the application.

On setpoint relay 1

Sets the level at which the relay turns on.

Setting	-99999 ... 99999
Default	0.0 m

Off setpoint relay 1

Sets the level at which the relay turns off.

Setting	-99999 ... 99999
Default	0.0 m

Step: Apply?

Apply?

Applies settings as last step in wizard.

Setting	Yes	Wizard completes and settings are applied.
	No	Returned to start of wizard.
Default	No	

7.5.2.5 Alarms

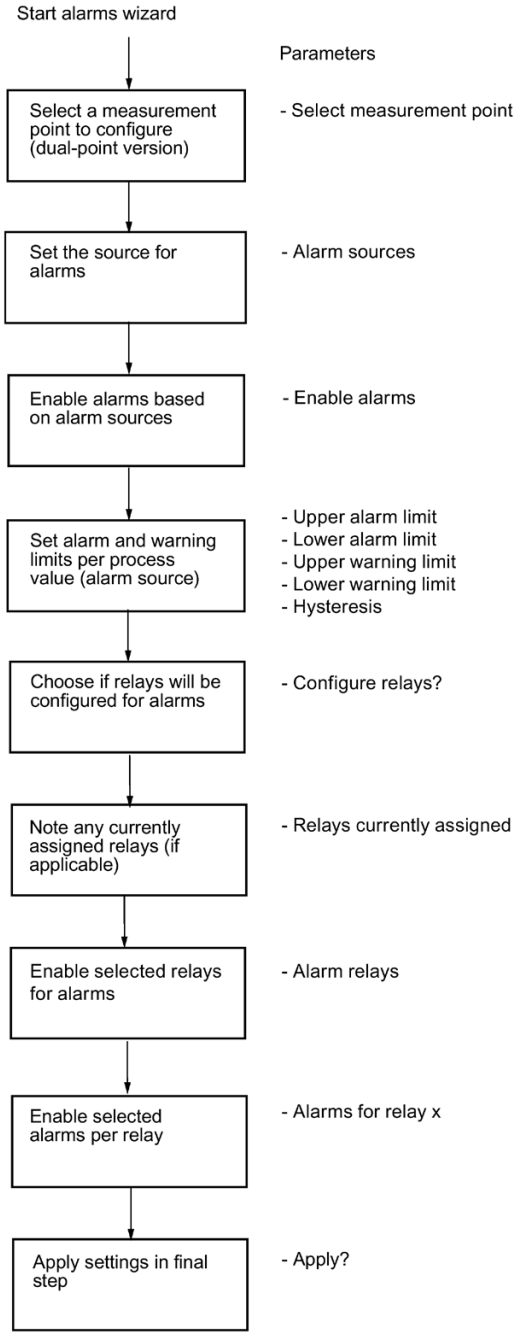

Step: About

Provides step-by-step procedure to configure alarms.

This is the first step in the wizard.

Step: Select measurement point

Select measurement point

Sets the measurement point to be configured for alarms.

This step will not appear on a single-point device.

Setting	• Measurement point 1 • Measurement point 2 • Exit
Default	Measurement point 1

Step: Alarm sources

Alarm sources

Sets the source for alarms.

Select setting "Sensor diagnostics" for LOE.

Setting	• Level • Space • Distance • Head • Volume • Volume flow • Sensor temperature • Sensor diagnostics
Default	Not applicable

The list of process values available in this step is based on any configuration completed via "Quick commissioning" wizards prior to running this wizard. For example, if a level application is configured via the quick commissioning wizard, only the setting "Level" will be available in this step. To set alarms for other process values, see menu Process values (2.2) (Page 207) (after completing the alarms wizard).

Select the setting "Sensor diagnostics" to configure alarms based on a pre-defined list of diagnostics:

	Measurement point 1	**Measurement point 2**
Sensor diagnostic message	**Diagnostic ID**	**Diagnostic ID**
Sensor not found.	0	22
Sensor not supported.	1	23
Loss of echo.	12	34
Sensor hardware failure (digital).	13	35
Sensor failure (digital).	14	36
Sensor failure (analog).	19	41

Step: Enable alarms

Enable alarms

Enables alarms based on alarm sources.

	Measurement point 1	Measurement point 2
Setting	[ ] 320 Level (point 1) above alarm limit	[ ] 340 Level (point 1) above alarm limit
	[ ] 321 Level (point 1) above warning limit	[ ] 341 Level (point 1) above warning limit
	[ ] 322 Level (point 1) below warning limit	[ ] 342 Level (point 1) below warning limit
	[ ] 323 Level (point 1) below alarm limit	[ ] 343 Level (point 1) below alarm limit
	[ ] 324 Space (point 1) above alarm limit	[ ] 344 Space (point 1) above alarm limit
	[ ] 325 Space (point 1) above warning limit	[ ] 345 Space (point 1) above warning limit
	[ ] 326 Space (point 1) below warning limit	[ ] 346 Space (point 1) below warning limit
	[ ] 327 Space (point 1) below alarm limit	[ ] 347 Space (point 1) below alarm limit
	[ ] 328 Distance (point 1) above alarm limit	[ ] 348 Distance (point 1) above alarm limit
	[ ] 329 Distance (point 1) above warning limit	[ ] 349 Distance (point 1) above warning limit
	[ ] 330 Distance (point 1) below warning limit	[ ] 350 Distance (point 1) below warning limit
	[ ] 331 Distance (point 1) below alarm limit	[ ] 351 Distance (point 1) below alarm limit
	[ ] 336 Head (point 1) above alarm limit	[ ] 356 Head (point 1) above alarm limit
	[ ] 337 Head (point 1) above warning limit	[ ] 357 Head (point 1) above warning limit
	[ ] 338 Head (point 1) below warning limit	[ ] 358 Head (point 1) below warning limit
	[ ] 339 Head (point 1) below alarm limit	[ ] 359 Head (point 1) below alarm limit
	[ ] 332 Volume (point 1) above alarm limit	[ ] 352 Volume (point 1) above alarm limit
	[ ] 333 Volume (point 1) above warning limit	[ ] 353 Volume (point 1) above warning limit
	[ ] 334 Volume (point 1) below warning limit	[ ] 354 Volume (point 1) below warning limit
	[ ] 335 Volume (point 1) below alarm limit	[ ] 355 Volume (point 1) below alarm limit
	[ ] 100 Volume flow (point 1) above alarm limit	[ ] 360 Volume flow (point 1) above alarm limit
	[ ] 101 Volume flow (point 1) above warning limit	[ ] 361 Volume flow (point 1) above warning limit
	[ ] 102 Volume flow (point 1) below warning limit	[ ] 362 Volume flow (point 1) below warning limit
	[ ] 103 Volume flow (point 1) below alarm limit	[ ] 363 Volume flow (point 1) below alarm limit
	[ ] 108 Sensor temperature (point 1) above alarm limit	[ ] 364 Sensor temperature (point 1) above alarm limit
	[ ] 109 Sensor temperature (point 1) above warning limit	[ ] 365 Sensor temperature (point 1) above warning limit
	[ ] 110 Sensor temperature (point 1) below warning limit	[ ] 366 Sensor temperature (point 1) below warning limit
	[ ] 111 Sensor temperature (point 1) below alarm limit	[ ] 367 Sensor temperature (point 1) below alarm limit
Default	[X] indicates enabled by default [ ] indicates disabled by default	

The alarms available in this step are based on process values selected in "Step: Alarm sources".

Step: <Process value> limits

Note

Step is repeated per process value

The parameters in this step need to be set for each process value selected as an alarm source.

All related parameters are shown below for the "Level" process value.

Settings and defaults for the limit parameters can be found in the menu Process values (2.2) (Page 207).

Level limits

Upper alarm limit

Sets the upper alarm limit. A diagnostic is generated if the process value exceeds this limit.

Setting	-99999 ... 99999
Default	6.0 m

Lower alarm limit

Sets the lower alarm limit. A diagnostic is generated if the process value falls below this limit.

Setting	-99999 ... 99999
Default	0.0 m

Upper warning limit

Sets the upper warning limit. A diagnostic is generated if the process value exceeds this limit.

Setting	-99999 ... 99999
Default	6.0 m

Lower warning limit

Sets the lower warning limit. A diagnostic is generated if the process value falls below this limit.

Setting	-99999 ... 99999
Default	0.0 m

Hysteresis

Sets hysteresis for alarm and warning limits. Hysteresis is distance between limits for activation and deactivation of an alarm/warning.

Setting	0 ... 99999
Default	0.1 m

Step: Configure relays?

Configure relays?

Allows user to configure relays if required for application.

Select "Yes" to assign a relay output to the alarm. Select "No" to configure alarms only for the local display, communication interface, and diagnostic log.

Setting	Yes	Continue to next step to configure relays.
	No	Skip step to configure relays, and go to last step in wizard.
Default	Yes	

NOTICE

Relay configuration overwritten by Alarms wizard

It is recommended to complete the wizard prior to any manual parameter adjustments, as relay settings configured in the Alarms wizard will supercede any relay settings previously configured outside of the wizard.

Step: Relays currently assigned

Relays currently assigned

Displays any relays that are currently configured for other applications, as a reference of relay availability for the alarms.

This step does not appear if no relays are configured for other applications.

CAUTION

Relay conflicts

Notification of relays assigned to other applications is given here, but assigned relays remain available for alarms. If one of these relays is assigned in the next step, the assignment from this wizard is used.

- When wizard settings are applied in the final step, any relays configured by the alarms wizard are assigned as needed, including disabling another application if there is a relay conflict.
- If an assignment is made in error, continue to the end of the wizard and select "No" in the final step ("Apply?"). Then re-run the wizard. (Selecting "Yes" to apply the wizard settings in this scenario, means the application will be incorrect and relays may be configured incorrectly.)

Step: Alarm relays

Alarm relays

Enables selected relays for alarms.

Setting	[ ] Relay output 1 [ ] Relay output 2 [ ] Relay output 3 [ ] Relay output 4 [ ] Relay output 5 [ ] Relay output 6
Default	[X] indicates enabled by default * [ ] indicates disabled by default

* Upon entering this step, relays will appear as enabled if they are currently assigned to any alarm or diagnostic on the current measurement point. Deselecting an already programmed relay will disable it.

Step: Alarms for relay 1

Note

Step is repeated per selected relay

This parameter must be set for each relay selected in "Step: Alarm relays".

Only the parameter for relay 1 is shown here as an example.

Alarms for relay 1

Enables selected alarms per relay.

List of available alarms is based on selections in "Step: Enable alarms", and if "Sensor diagnostics" was enabled in "Step: Alarm sources".

All alarms are disabled by default, and as each alarm is enabled for the current relay, it is no longer available for the next relay in this step.

Selections made here, including those made to a relay already configured for another application, will take effect when the wizard is completed.

Step: Apply?

Apply?

Applies settings as last step in wizard.

Setting	Yes	Wizard completes and settings are applied.
	No	Returned to start of wizard.
Default	No	

7.6 Remote commissioning

SITRANS LT500 supports the following software tools with Quick start wizards for remote commissioning:

- PC running SIMATIC PDM
- PC running a Field Device Tool (FDT)

For more information, see appendix Remote operation (Page 471).

7.7 Requesting an echo profile

Procedure

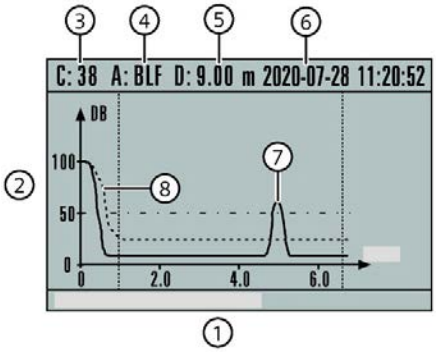

① X-axis: Distance
Distance units can be set to: m, cm, mm, ft, in.

② Y-axis: Echo amplitude (in dB)

③ Echo confidence [1)]

④ Algorithm used [2)]

⑤ Distance from sensor face to target

⑥ Date and time stamp of echo

⑦ Echo

⑧ TVT [3)]

[1)] See Confidence (Page 412)

[2)] See Algorithm (Page 411)

[3)] Where AFES has been learned, AFES curve replaces TVT curve (see Auto false echo suppression (2.1.9) (Page 201)).

1. In parameter view, enable profiles using parameter Enable echo profile (3.2.9.1) (Page 294).
2. Set a timeout if desired in parameter Echo profile timeout (3.2.9.2) (Page 294).
3. With profiles enabled, request a profile using parameter View echo profile (3.2.9.3) (Page 294).
4. Scroll to the measurement point desired, then press ▶ button to request a profile.
   A loading icon displays until the profile is retrieved from the sensor.

5. Vertical dashed lines on graphic above indicate the window area in which zoom and pan can be used.
   Use ▲ or ▼ buttons to zoom and pan:
   - Zoom goes from 0 (default view) to 4.
   - Once in a zoom (higher than 0), press ▶ button, and then press ▲ and ▼ buttons to pan between distance windows.

   Profile will update approximately every 60 seconds, until disabled.
6. To exit and return to the previous menu, press ◀ button.

7.8 Testing the configuration

After programming the device, it is recommended that you test the device to ensure that it performs to your specifications. This test can be run in simulation mode or by varying the actual level in the application. The latter is preferred as it more accurately represents running conditions. However, if it is not possible to do a physical test, a simulation will ensure that control programming is correct. For further details, see Simulation (Page 184).

7.9 Application examples

In the examples that follow, substitute your own application details. If the examples do not apply to your application, check the applicable parameter reference for the available options.

7.9.1 Level application example

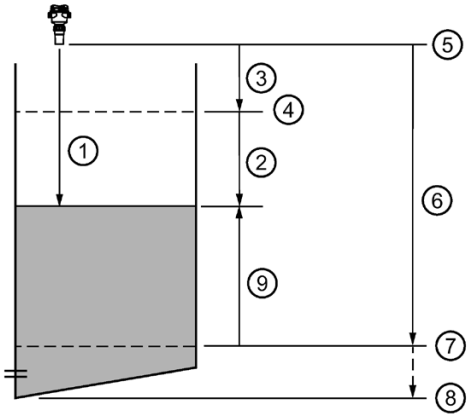

① Distance (5.5 m)
② Space (4.5 m)
③ 1.0 m
④ Upper calibration point
⑤ Sensor reference point
⑥ 9.0 m
⑦ Lower calibration point
⑧ Far range
⑨ Level (3.5 m)

Quick commissioning parameter	Setting/value	Description
Application	Level	Material level referenced from "Lower calibration point"
Length units	m	Units corresponding to the level units
Sensor type	SITRANS LU240	Type of sensor connected
Lower calibration point	9.0 m	Process empty level
Upper calibration point	1.0 m	Process full level
Response rate	Slow (0.1 m/min)	Sets fill/empty rate limits to 0.1 m/min Sets fill/empty indicator limits to .01 m/min Sets fill/empty alarm limits to 0.11 m/min
Material type	Liquid	

The application is a vessel that takes an average 3 hours (180 minutes) to fill and 3 weeks to empty.

"Fill rate" = ("Lower calibration point" – "Upper calibration point") / fastest of fill or empty time

= (9 m – 1 m) / 180 min

= 8 m /180 min. = 0.04 m/min

7.9.2 Volume flow application example

In this example, a 12 inch (0.305 m) Parshall Flume has been installed in an open channel. As per the supplier's data sheet, the device has been rated for a maximum flow of 1143 m^3 per hour at a maximum level of 0.6 m. The Parshall Flume is considered an exponential device, therefore the supplier's data sheet includes a flow exponent value of 1.522. The SITRANS Probe LU240 has been installed 1.6 m above the channel.

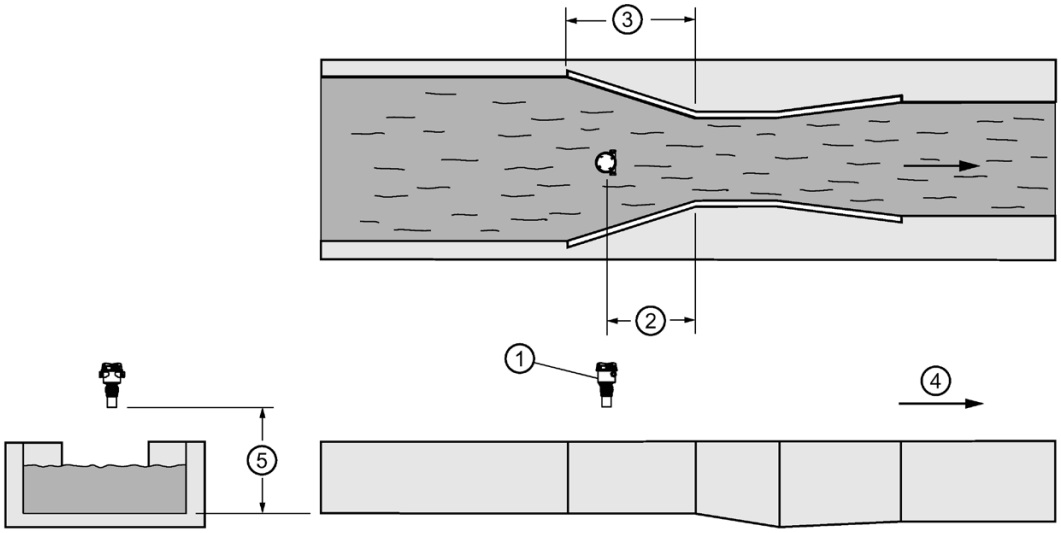

① SITRANS Probe LU240
② 2/3 of converging dimension
③ Converging dimension
④ Direction of flow
⑤ Lower calibration point (Zero head)

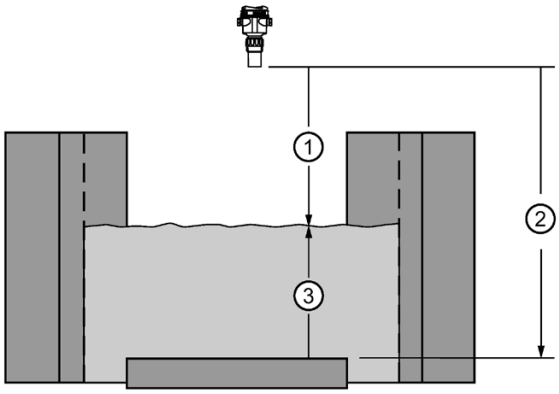

① Upper calibration point (1.0 m)
② Lower calibration point (1.6 m)
③ Maximum head (0.6 m)

Quick commissioning parameter	Setting/value	Description
Application	Volume flow	
Length units	Meters	Units corresponding to the head measurement
Volume flow units	m3/h	Set per end user requirements
Volume units	l (liters)	Set per end user requirements
Sensor type	SITRANS Probe LU240	Type of sensor connected
Lower calibration point	1.6	The distance to the empty point or bottom of the flume. This sets the material level at 4 mA.
Upper calibration point	1.0	The distance to the maximum level. This sets the "Upper range value".
Response rate	Medium (1.0 m/min)	Sets fill/empty rate limits to 1.0 m/min Sets fill/empty indicator limits to 0.1 m/min Sets fill/empty alarm limits to 1.1 m/min
Material type	Liquid	
Primary measuring device (PMD)	Exponential devices	Parshall Flumes are a type of exponential device
Method of flow calculation	Ratiometric	Used when the "Maximum head" and "Maximum flow" values are provided
Flow exponent	1.522	Available from the PMD supplier data sheet
Maximum head	0.6 m	Available from the PMD supplier data sheet
Zero head offset	0.0 m	The difference between the "Lower calibration point" and "Zero head"
Maximum flow	1143 m^3/h	Available from the PMD supplier data sheet
Low flow cut-off	0.0 m^3/h	Minimum head where totalizer activity should cease

Operating

8

8.1 Local operation

8.1.1 Local display (HMI)

The device is operated with local buttons on the HMI (Human Machine Interface).

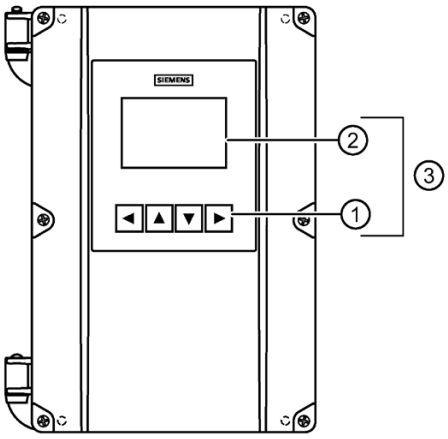

① Local buttons
② Graphical display
③ HMI for local operation

Note

Local display timeout

If no button is pressed for 10 minutes, display switches to operation view. If parameter "Backlight" is set to "Automatic", display backlight goes off automatically 30 seconds after the last button press.

The device menu is shown on the graphical display, and can be navigated using the local buttons.

8.1.1.1 Access control

Visibility of some menu/parameter items is based on configuration and access level. Although all visible items and their settings can be viewed in the HMI menu, parameters can be protected against changes through access level control.

To gain access enter parameter view with security enabled ("Enable user PIN") and select one of the access levels:

- Read only

  Allows no configuration. The parameter values can be viewed only (indicated by a 🔒 symbol). No PIN code required.

- User

  Allows configuration and service of all parameters except calibration parameters. Default PIN code is 2457.

- Expert

  Allows configuration and service of all parameters. Default PIN code is 2834.

PIN codes can be changed in menu "Security" (5).

Note

Lost PIN code

- If User PIN is lost, it can be reset with expert access level.
- If Expert PIN is lost, see Recovery ID (5.3) (Page 354) under menu "Security" to reset the PIN with the help of Siemens customer support.

Disable access level control

If logged in as Expert, the user PIN can be disabled (parameter "Disable user PIN"). The user is not prompted to enter the password (PIN). Enabling the access level control can be done in parameter "Enable user PIN" and requires entering the Expert password.

Auto logout function

This function is used to automatically logout of parameter view after 10 minutes of inactivity. User can navigate parameter/edit/read only view for up to 10 minutes from last button press (before screen returns to operation view).

If security is enabled, and auto logout is performed, the PIN is required to re-enter parameter view.

NOTICE
Device restart Whenever the device is restarted (with PIN enabled), the access level is reset to "Read only".

8.1.1.2 Display views

There are four display views on the device:

- Operation view
- Parameter view
- Edit view
- Read only view

After initial startup, the device enters operation view.

Sample operation view: normal operation

In general, all display views show the following:

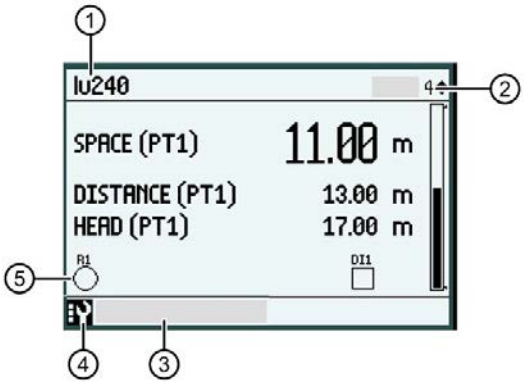

① Describes the measurement point and is shown in all operation views. ("lu240" is an example only.)
Can be changed via the menu, see parameter Long tag (3.1.3) (Page 290) or Tag (3.1.3) (Page 290).

② Shows the operation view number. The number refers to the view number configured in the menu Local display (2.8) (Page 269).

③ Text area to describe status, such as an alarm. (Only shown if an alarm is active.)

④ Indicates device status, such as an active alarm. Shows the alarm class, see Status signal mode (3.2.6) (Page 293). (Only shown if an alarm is active.)

⑤ Icons refer to relays (R1 to R6) and digital inputs (DI1, DI2).
Icons show on display (in specific view types*) when a relay or digital input (DI) is programmed. Unfilled icons indicate the function is enabled, filled icons indicate the signal is being generated.
* View type options that contain 'icons' in the name. For example, see parameter Type (2.8.5.1) (Page 271).

Operation view

Operation view shows the current measured values, status and diagnostic messages, and allows control of certain functions and alarms.

Up to six user-configured views are available in operation view:

Default views at initial startup are set as follows:

- View 1: Level (measurement point 1)
- View 2: Level, Space, Distance (each for measurement point 1)
- View 3: Level (measurement point 2)
- View 4: Level, Space, Distance (each for measurement point 2)
- View 5: Disabled by default
- View 6: Diagnostics (Alarms and warnings belong to general diagnostics.)

Switch manually between the enabled views with the ▲ and ▼ buttons.

The actual display view number (1 to 6) is shown in the upper right corner of the display.

Note

signs on display

The display is unable to show the measured value. Change the measurement unit or the resolution.

Configuring the operation view

1. Go to "Setup > Local display", view 1 to 6.
2. Sets the view type to show on local display for respective view.

   In view 1, only a measurement view type can be selected. In views 2 to 6, all view types can be selected:

- View type: Measurement
  - 1 (process) value
  - 1 value and horizontal bar graph
  - 1 value, icons and vertical bar graph
  - 1 value and trend chart
  - 3 values and horizontal bar graph
  - 3 values, icons and vertical bar graph
  - 6 values
  - Diagnostics
- View type: Control
  - Totalizer
- View type: Alarm
  - Alarm/diagnostic list

Note

Parameter view can only be accessed by pressing the right button in a measurement view type.

For more information, see menu Local display (2.8) (Page 269).

View type: Measurement

The operation view type "Measurement" shows measurement values.

The following options can be selected:

1 value

1 value and horizontal bar graph

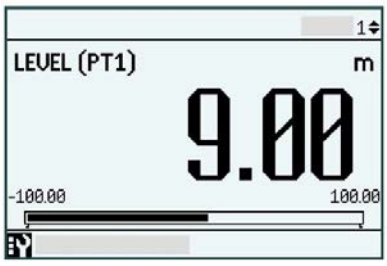

NOTICE
Bar graphs The bar graph shows the process value in relation to its configured maximum and minimum limits. For example, for a Level process value, the range is from Lower calibration point (bar graph empty) to Upper calibration point (bar graph filled).

1 value, icons and vertical bar graph

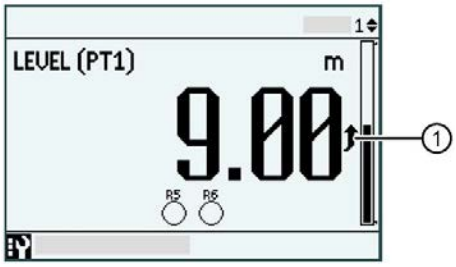

① Filling indicator - appears when view type includes a vertical bar graph and level is increasing faster than the fill rate indicator limit.

1 value and trend chart

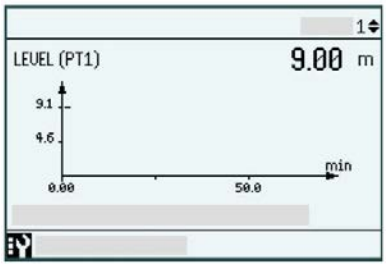

3 values and horizontal bar graph

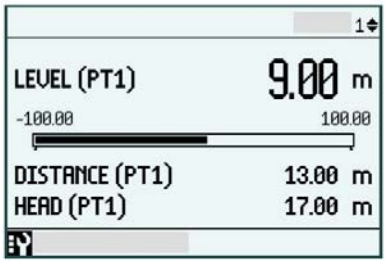

3 values, icons and vertical bar graph

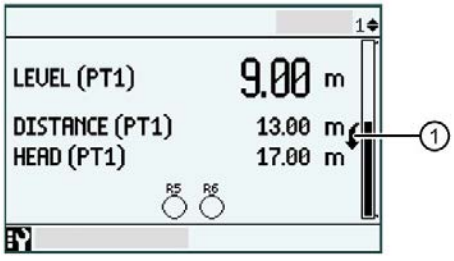

① Emptying indicator - appears when view type includes a vertical bar graph and level is decreasing faster than the empty rate indicator limit.

6 values

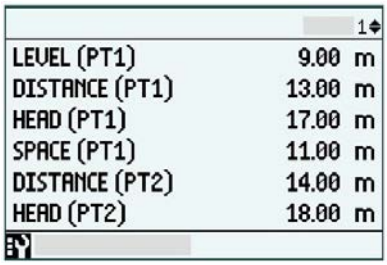

For more information, see menu Local display (2.8) (Page 269).

Button functions: Measurement

Button	Function
◀	No functionality
▲	Go to the previous view in the operation view
▼	Go to the next view in the operation view
▶	Enter the parameter (navigation) view

View type: Control

The operation view type "Control" enables totalizer reset.

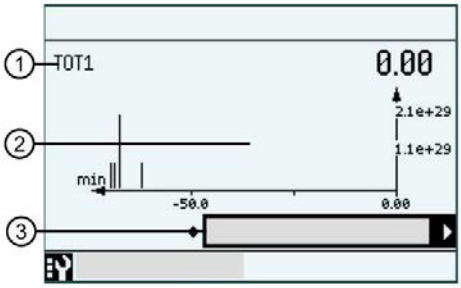

① Process value
② Graph
③ Action to perform (for example, "Reset and hold")

Navigating Control view

1. Select view "Control"

   Totalizer values are shown.
2. Press ▶ button to the access the totalizer.

   The totalizer can be reset, paused or restarted using various options:
3. Press ▼ button to scroll through options:
   - Reset and resume
   - Reset and hold
   - Preset and resume*
   - Preset and hold*
   - Resume
   - Hold

   * Uses the "Preset value" configured per totalizer in menu Totalizers (2.3) (Page 222).
4. Press ▶ button to execute.

Button functions: Control

Control view - level 1

Button	Function
◀	No functionality
▲	Previous view
▼	Next view
▶	Enter control view level 2

Control view - level 2

Button	Function
◀	Enter control view level 1
▲	Select action to perform
▼	Select action to perform
▶	Perform selected action

View type: Alarm

The operation view type "Alarm" shows a list of active alarms, and details of each diagnostic.

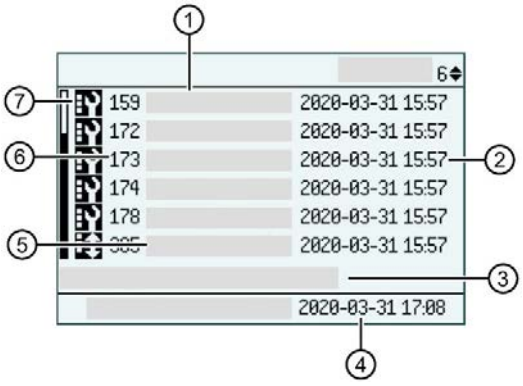

① List of all active alarms/diagnostics in device.
② Timestamp with the actual date and time when the alarm/diagnostic occurred.
③ Press right button for detailed information in alarm/diagnostic list (level 2).
④ Shows the current date and time.
⑤ Short alarm/diagnostic name.
The complete text can be viewed in the detailed information view (level 3)
⑥ Shows the alarm/diagnostic identification number, see Device status symbols (Page 362).
⑦ Shows the alarm class of the diagnostic, see Status signal mode (3.2.6) (Page 293).

Navigating Alarm view

1. Select view "Diagnostics"
2. Press ▶ button to access the alarm/diagnostic list.
3. Press ▲ or ▼ buttons to scroll through the list.
4. Press ▶ button to access detailed information of the highlighted alarm/diagnostic:
   - Timestamp for alarm/diagnostic occurrence (Coming).
   - Possible causes and corrective action.
5. Press ◀ button to exit the detailed information view.

Alarm/diagnostics acknowledgment

There are two ways to remove an alarm/diagnostic from the list.

- Manual: The alarm/diagnostic remains in the list until the cause is removed and the alarm/diagnostic is manually acknowledged. The time of the acknowledgement is shown in the history log.
- Auto: The alarm/diagnostic is removed from the list when the cause is removed.

Choose setting in parameter Acknowledge mode (3.2.4) (Page 293).

Button functions: Alarm

Alarm view - level 1

Button	Function
◀	No functionality
▲	Go to previous menu in operation view
▼	Go to next menu in operation view
▶	Enter alarm view level 2

Alarm view - level 2

Button	Function
◀	Enter alarm view level 1
▲	Select item above in list; press and hold button to accelerate scrolling up the selection list

Button	Function
▼	Select item below in list; press and hold button to accelerate scrolling down the selection list
▶	Enter alarm view level 3

Alarm view - level 3

Button	Function
◀	Enter alarm view level 2
▲	No functionality
▼	No functionality
▶	No functionality

Fixed display texts

Some texts on the local display are fixed, which means they will not change regardless of a change to the display language.

The following table lists the fixed display texts and their corresponding process value.

Table 8- 1 Process values

Fixed display text	Process value name
CH{0}	CH{0} value
CH{0} DIG. IN.	CH{0} digital input
CH{0} DIG. OUT.	CH{0} digital output
CH{0} INP. CURR.	CH{0} input current
CH{0} LOOP CURR.	CH{0} loop current
DISTANCE	Distance
DISTANCE (PT{0})	Distance (point {0})
HEAD	Head
HEAD (PT{0})	Head (point {0})
LEVEL	Level
LEVEL (PT{0})	Level (point {0})
LEVEL AVG.	Level average
LEVEL DIFF.	Level difference
MEDIUM TEMP.	Medium temperature
P{0} SOUND VEL.	Sound velocity measurement path {0}
SENSOR TEMP.	Sensor temperature
SENSOR TEMP. (PT{0})	Sensor temperature (point {0})
SOUND VEL.	Sound velocity
SPACE	Space
SPACE (PT{0})	Space (point {0})
TOT{0}	Totalizer {0}
TRN.TEMP.	Transmitter electronics temperature
VOL.FLOW	Volume flow
VOL.FLOW (PT{0})	Volume flow (point {0})
VOL.FLOW RAW	Volume flow raw
VOLUME	Volume
VOLUME (PT{0})	Volume (point {0})

Parameter view

Parameter view shows parameters, parameter values, and the wizards of the device.

Parameters are identified by name and organized into function groups. They are arranged in a 5-level menu structure, and uniquely identified with a menu item number, as in the example below.

1. Quick start

2. Setup

2.1 Sensor

.....

2.5 Application

2.5.1 Volume

2.5.2 Custom volume table (1...16)

2.5.3 Custom volume table (17...32)

2.5.4 Pump control

.....

In parameter view, the first level of the 5-level menu structure (entered by pressing right arrow from operation view), is standardized for all Siemens Process Instrumentation devices and covers the following groups:

Menu item number	Menu item name	Description
1.	Quick start	Lists the most important parameters for quick configuration of the device. All parameters in this view can be found elsewhere in the menu.
2.	Setup	Contains all parameters which are needed to configure the device.
3.	Maintenance and diagnostics	Contains parameters which affect the product behavior regarding maintenance, diagnostics and service. Examples: Verification, failure prediction, device health, data logging, alarm logging, report, condition, monitoring, tests, etc.
4.	Communication	Contains parameters which describe the communication settings of the device.
5.	Security	Contains parameters which describe all security settings of the device.
6.	Language (parameter)	Parameter for changing the language of the local display. Regardless of the language setting, the term for this parameter is always the English term (Language).

① List of menus and parameters
② Name of the previously selected menu
③ Menu item number of highlighted menu
④ Alarm status text
⑤ Alarm symbol

Menu item

In parameter view, menus are identified by an arrow in the right-most position.

The selected menu is shown with a black background.

For further information on how to gain access to the menus, see Access control (Page 104).

Parameter item

In parameter view, parameters are shown without an arrow in the right-most position except when the parameter is selected. When selected, the parameter is expanded into two lines. The second line shows the value of the parameter, a lock symbol (🔒) (if the parameter is read only), and an arrow in right-most position.

The selected parameter can be edited (edit view), by pressing right arrow from parameter view.

The selected parameter can only be read (read only view), if the lock symbol is present.

Button functions: Parameter view

Browse menu items using the display buttons as follows:

Button	Function
◀	Enter the next higher level of parameter view (for example from menu level 2 to menu level 1). If located on menu level 1 in parameter view, then enter operation view. Press and hold button (from any parameter view) to return to operation view.
▲	Select the item above in the list; keep pressing the button to accelerate scrolling up the selection list. If the button is pressed when the top item is selected, the bottom item will be highlighted.
▼	Select the item below in the list; keep pressing the button to accelerate scrolling down the selection list. If the button is pressed when the bottom item is selected, the top item will be highlighted.
▶	Enter the next lower level of the parameter view (for example from menu level 1 to menu level 2). If a parameter (that is not read only) is selected in the parameter view, then enter edit view.

Edit view/Read only view

Edit view

- Used to read and set parameter values. Edit view can be entered from parameter view.

Read only view

- Used to read parameter values.

Note that your access level also decides read and write ability for parameter values.

Edit view - numeric parameters

Numeric parameters in edit view are displayed as shown below.

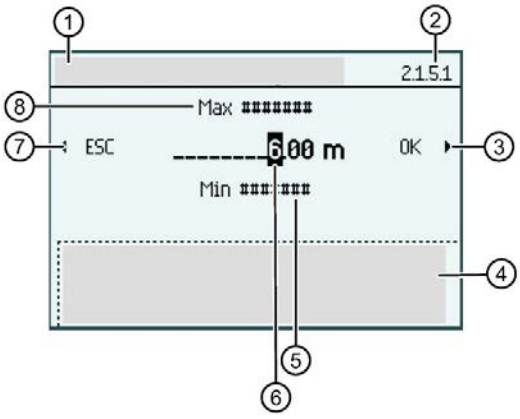

① Parameter name
② Parameter item number
③ Confirm and save (frame around "OK" is only shown when cursor is in right-most position)
④ Help text describing the parameter function. The help text appears if no button is pressed for three seconds.
⑤ Minimum value
⑥ Value to be edited
⑦ Escape without saving (frame around "ESC" is only shown when cursor is in left-most position)
⑧ Maximum value

Note

Maximum and minimum values in edit view - numeric parameters

When "#######" symbol appears with "Min" or "Max" value in edit view, this indicates that the parameter has no inherent minimum or maximum value.

Changing a value

Procedure

1. Select the digit to be changed by pressing ▶ and ◀ buttons.
2. Use ▲ button to increase the value and ▼ button and decrease the values.

   Press and hold these buttons to accelerate scrolling through the text options.
3. Press ▶ button in the rightmost position to confirm the changes, or press ◀ button in the leftmost position to escape the view without changing the value.

Note

Proper configuration

Ensure that the new value is within the minimum/maximum range.

Changing the resolution

Procedure

1. Select decimal point by pressing ▶ and ◀ buttons.
2. Move decimal point by pressing ▲ button (moves decimal point to the left) or ▼ button (moves decimal point to the right).

In order to change the resolution of the process value shown in the operation view (for example volume flow), change the resolution of one configuration parameter for this process value, for example parameter Low flow cut-off (2.5.6.10) (Page 262). Any changes in resolution will change the resolution of all configuration parameters for this process value as well.

The resolution can also be changed by setting the decimal places parameter for the selected process value, for example the decimal places for process value volume flow is defined in parameter Decimal places (2.2.6.4) (Page 216).

Read only view - numeric parameters

Numeric parameters in read only view are displayed as shown below.

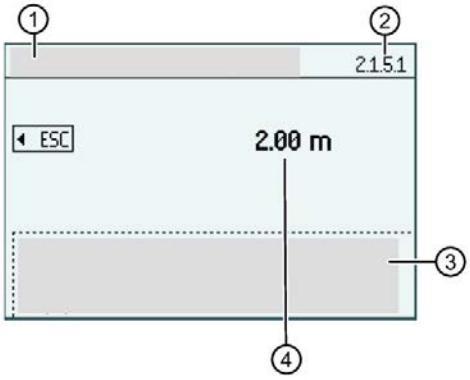

① Parameter name

② Parameter item number

③ Help text describing the parameter function. The help text appears if no button is pressed for three seconds.

④ Read only value

The read only view is shown if you do not have access to edit parameter. The view shows the set value. Press ◀ button to escape the view.

Edit view - parameter list

List of parameters in edit view are displayed as shown below.

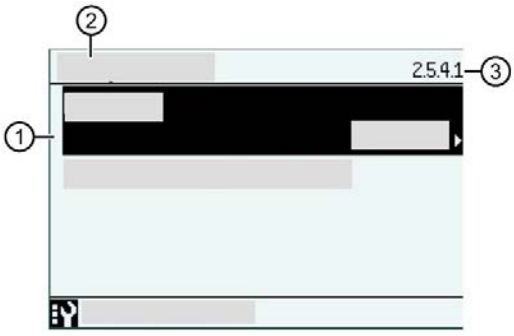

① Parameter name (when selected, current setting shown at right)

② Menu name

③ Parameter item number (for selected parameter)

Select the parameter by using ▲ and ▼ buttons, and press ▶ button to edit parameter, then again to confirm changes. Press ◀ button to escape the view without changing the value.

Read only view - parameter list

List of parameters in read only view are displayed as shown below.

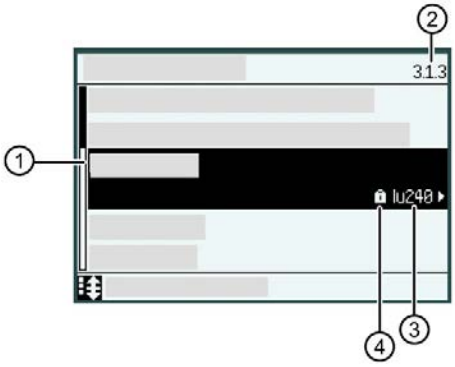

① Parameter name (for example, "Tag")
② Parameter item number
③ Read only value (for example, value for parameter "Tag" shown here)
④ Lock symbol

The lock symbol is shown if you do not have access to edit the parameter. Press ◀ button to escape the view.

Edit view - multiselection view

It is possible to select/deselect multiple values in multiselection view, such as alarms to be enabled under parameter Enable alarms (2.2.1.3) (Page 207).

① Parameter name
② List of selectable values
③ "Save settings" action

Use ▲ and ▼ buttons to scroll through the values. Use ▶ button to select/deselect the value.

In this example, selected alarms are enabled and will display in active alarm list if alarm is triggered. Unselected alarms will be suppressed from active alarm list even if alarm is triggered on the device.

Note

Save settings

To activate the selections, navigate to (highlight) the action 'Save settings' on bottom line of view, then press ▶ button to save settings before leaving the view.

Button functions: Edit/Read only view

Use the local buttons on the HMI to view/change parameters as described below.

Button functions in edit view

Button	Function
◀	Select the next left position. If the most left position is selected, exit the parameter edit view without confirming the changes. Keep pressing the button to jump to the most left position.
▲	Change the selected number/character. Numeric characters: increase the number by one (for example from 7 to 8) ASCII characters: select the previous character in the alphabet.
▼	Change the selected number/character. Numeric characters: decrease the number by one (for example. from 8 to 7) ASCII characters: select the next character in the alphabet.
▶	Select the next right position. If most right position is selected, confirm the change and exit the parameter edit view. Keep pressing the button to jump to the most right position.

Button functions in read only view

Button	Function
◀	Exit parameter read only view
▲	No functionality
▼	No functionality
▶	No functionality

8.1.1.3 Process value damping

The process values shown on the local display can be damped to smooth value fluctuations (Process value damping (2.8.4) (Page 270)).

Set the damping value, then select the process values to appear damped on the local display.

8.1.2 Versions available for local operation

This device is available in both single- and dual-point versions.

Note

Type of measurement for application must be set per measurement point

The number of points is an order option and is set by the factory. The "Quick commissioning" wizard should be run initially to set the type of measurement for the application (see wizard Step: Select application (Page 61)) on a single-point version. On a dual-point version, the type of measurement must be set via the wizard for each measurement point.

Once the application is set via the wizard, the type of measurement is shown under the process value for the respective output channel:

- Measurement point 1 = "Current output 1" (channel 2)
  - "Current output (HART)" (channel 1) is also configured for measurement point 1 if HART communication card installed
- Measurement point 2 = "Current output 2" (channel 3)

The device (independent of version) starts in an OFF state and does not take Level measurements.

- To set up measurement, the parameters should be configured via the "Quick commissioning" wizard, for the appropriate application
- See Quick commissioning wizards via HMI (Page 60)

8.1.2.1 Single-point versions

Parameters must be configured to begin measurement. A sample configuration is listed below.

Change the following parameters to reflect your application.

Wizard step	Parameter	Sample value	Description
Select application		Level	Application = Level *
Length units	Length units (Page 64)	m	Units = m (meters)
Sensor type	Sensor type (Page 65)	SITRANS LR110	Connected sensor type = LR110
Calibration **	Lower calibration point (Page 66)	10	Lower calibration point = 10 m
	Upper calibration point (Page 66)	12	Upper calibration point = 12 m
	Response rate (Page 66) (available via wizard only)	Medium	Maximum process speed = Medium (1.0 m/min)
	Material type (Page 66)	Liquid	Material type = Liquid

* An application setting of "Level average" or "Level difference" is not possible with a single-point device.

** If parameter "Sensor type" is set to "Generic (4...20 mA), additional calibration parameters are required to set the current for the lower and upper calibration points, and parameter "Material type" is not required.

8.1.2.2 Dual-point versions

Parameters must be configured to begin measurement. For a dual-point device, complete the "Quick commissioning" wizard for measurement point one, and click "Apply?" to save the settings. Next, complete the wizard for measurement point two, and apply, before selecting "Exit" in the wizard.

For a sample configuration, see Single-point versions (Page 123).

Average or differential

A dual-point version is required to measure average or differential. Connect two sensors, then run the quick commissioning wizard for both points.

All relevant parameters will need to be set for each measurement point.

Note

Dual-point device applications

An application setting of "Level average" or "Level difference" is only possible with a dual-point version, and must be set outside of the commissioning wizard.

- First, complete the commissioning wizard for a Level application on both points, then set the process value:
  - For the configured current output to follow "Level average" or "Level difference"

    For example, see Process value (2.4.1.4) (Page 229) for "Current output (HART)"
  - For a pump control application based on "Level average" or "Level difference"

    For example, see Process value (2.5.4.2) (Page 251) under menu "Application>Pump control"
- Next, configure the operation views to display "Level average" or "Level difference"

  For example, see 1st value (2.8.5.2) (Page 272) for "View 1" under menu "Local display"

8.1.3 Starting measurements

8.1.3.1 Measurement conditions

The following information will help you configure your device for optimal performance and reliability.

Response rate

The response rate of the device influences the measurement reliability. Use the slowest rate possible with the application requirements.

The response rate is also important to functions connected to fill/empty rate limits for indicators and alarms.

Dimensions

The dimensions of the vessel, wet well, or reservoir are only important if you require volume. Dimensions are required to report the level value in terms of Volume. The pumped volume function can also report pumped volume.

Fail-safe

The fail-safe parameters ensure that other devices controlled by LT500, default to a safe mode of operation in the event of a fail-safe state. Parameter "Fail-safe behavior" sets the value to be reported in the event of a fail-safe state. Set this parameter value so that a loss of signal triggers the same response as an unsafe level.

If fail-safe activates frequently, see chapter Diagnostics and troubleshooting (Page 362).

Although parameter "Fail-safe behavior" determines the mA reading/action to be taken in the event of a fail-safe state, the desired behavior must be set independently per output, and the trigger conditions and settings applied differ for each:

- Current outputs
- Device totalizers, external totalizers and samplers, and
- Relays.

When any of these outputs are in a fail-safe state, the HMI will show the relevant diagnostic for the device/output.

Fail-safe behavior for current outputs

A fail-safe state for current outputs can be activated based on a failure or a faulty process value.

- Set per current output in parameter "Fail-safe behavior activation condition"

If a current output activation condition is set to "Failure", a bad status on the selected process value or any diagnostics that activates a "Maintenance alarm" will activate a fail-safe behavior. This is the default setting for CH1. If a current output is set to "Selected process value faulty", only a bad status on the selected process value will activate a fail-safe behavior. This is the default setting for CH2, and CH3.

- CH1 - Current output (HART) - mA output goes to fail-safe value set in parameter Fail-safe behavior (2.4.1.9) (Page 230)
- CH2 - Current output 1 - mA output goes to fail-safe value set in parameter Fail-safe behavior (2.4.2.9) (Page 233)
- CH3 - Current output 2 - mA output goes to fail-safe value set in parameter "Fail-safe behavior" (2.4.3.9)

A value can be shown when a fail-safe state exists.

- Set per current output in parameter "Fail-safe behavior". To set a specific mA value, select option "Fail-safe value".

A minimum time can be set for the duration of the fail-safe behavior , in case of a short-term fail-safe state.

- Set per current output in parameter "Fail-safe behavior minimum duration".

Example: Loss of echo (LOE)

A loss of echo (LOE) fault occurs when the calculated measurement is considered unreliable.

For a LOE fault, parameter Fail-safe LOE timer (2.1.7) (Page 200) determines the length of time a loss of echo (LOE) condition will persist before a fail-safe state is activated.

Parameter Fail-safe behavior (2.4.1.9) (Page 230) determines the mA value (corresponding to the selected process value) to be reported when "Fail-safe LOE timer" expires. Upon receiving a reliable echo (and assuming no delay, based on setting for parameter "Fail-safe behavior minimum duration"), the loss of echo condition is aborted, the maintenance alarm icon and diagnostic message are cleared, and the current output returns to the current material level.

If two diagnostics are present at the same time, the device status indicator and text for the highest priority fault will show on the local display. For more information related to fault priority, see Device status symbols (Page 362).

Fail-safe behavior for device totalizers, external totalizers and samplers

A fail-safe state for these outputs is activated based on a faulty process value, i.e. their input quality has a bad status.

When a fail-safe state exists, the behavior can be set to "Pause counting" or "Count latest good value".

- Set parameter "Fail-safe behavior" for each device totalizer, or relay assigned to an external totalizer or sampler:
  - Per device totalizer, under menu Totalizers (2.3) (Page 222)
  - Per relay, under menu Inputs and outputs (2.4) (Page 228). For example, for external totalizer 1 or external sampler 1, see parameter Fail-safe behavior (2.4.6.12) (Page 246) in menu "Relay output 1".

Fail-safe behavior for relays programmed for application, status signals, or alarms and diagnostics

A fail-safe state for such relays is activated based on specific sensor diagnostics becoming active.

To use this function:

- Select specific sensor diagnostics per measurement point in parameter "Select fail-safe diagnostics".
- Next, configure a relay for the appropriate mode, and fail-safe behavior.

The fail-safe behavior settings are available per relay.

For example, for "Relay output 1" set parameter Mode (2.4.6.1) (Page 236) and parameter Fail-safe behavior (2.4.6.12) (Page 246)

When parameter "Mode" is set to:

- "Status signals"
- "Alarms and diagnostics" or
- "Application setup",

parameter "Fail-safe behavior" is visible, with settings:

- "Disabled"
- "Hold last state"
- "Energized"
- "De-energized".

Per the modes above, a second parameter "Fail-safe behavior source" also becomes visible.

For each relay output, the user can select from the following fail-safe sources:

- "Measurement point 1" - only a fail-safe condition on measurement point 1 will affect the relay
- "Measurement point 2" - only a fail-safe condition on measurement point 2 will affect the relay
- "Measurement point 1 and 2" - a fail-safe condition on either measurement point will affect the relay

CAUTION

Relay fail-safe takes precedence

The relay fail-safe functionality takes precedence over the relay functions. This means that when a fail-safe condition exists, the relay will (if configured) take on the state defined by the fail-safe behavior setting rather than the state determined by the assigned relay function.

This could be used for example, to force a pump relay to turn off if the sensor reports a loss of echo (LOE) condition on the measurement point.

8.1.3.2 Sensor parameters controlled by SITRANS LT500

Connected remote sensors always provide a distance value that is converted by the device. Various parameters from each sensor type are controlled by SITRANS LT500. For a list of parameter names per sensor, see Remote sensor parameters (Page 424).

8.1.4 Process values

Process values are updated by the device every second (with echo profiles disabled). (They are updated every four seconds when echo profiles are enabled.)

Process value parameters

The process values are:

- Level *
- Space *
- Distance *
- Head *
- Volume *
- Volume flow *
- Sensor temperature *
- Level difference
- Level average

* available for both measurement point 1 and 2

All process values are available on each current output channel:

- Current output (HART) - HART communication option
- Current output 1
- Current output 2

Limit monitoring

Limits

Alarm and warning limits can be assigned to all process values. The following limit parameters are available for each process value:

- Upper alarm limit
- Upper warning limit
- Lower warning limit
- Lower alarm limit
- Hysteresis

The system reports a process alarm when the process value exceeds the "Upper alarm limit" or the "Lower alarm limit". Likewise, the system reports a process warning when the process value exceeds the "Upper warning limit" or the "Lower warning limit". Process value alarms and warnings are displayed in the local display as well as at the communication interfaces.

Hysteresis

The hysteresis functions as follows:

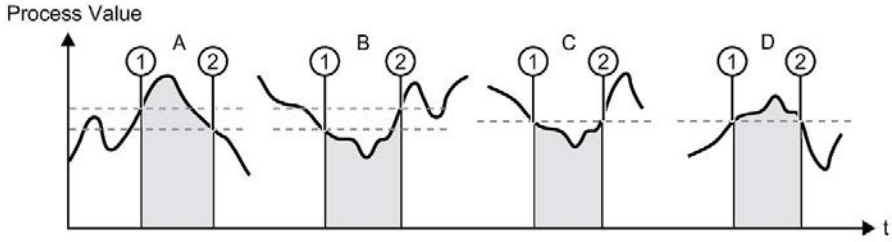

A: Upper alarm limit with hysteresis
The alarm is triggered when the process value rises above the Upper alarm limit (1). The alarm is cleared when the process value falls below the Upper alarm limit minus hysteresis (2).

B: Lower alarm limit with hysteresis
The alarm is triggered when the process value falls below the Lower alarm limit (1). The alarm is cleared when the process value rises above the Lower alarm limit plus hysteresis (2).

C: Lower alarm limit without hysteresis
The alarm is triggered when the process value falls below the Lower alarm limit (1). The alarm is cleared when the process value rises above the Lower alarm limit (2).

D: Upper alarm limit without hysteresis
The alarm is triggered when the process value rises above the Upper alarm limit (1). The alarm is cleared when the process value falls below the Upper alarm limit (2).

All alarms and warnings can be signaled on the output if "Mode" is set to "Alarms and diagnostics", see Relay outputs (Page 136).

Limit behavior on the outputs

Note

Process value with "Bad" status

When the status of a process value is "Bad" it will not be evaluated against the user programmed limits (upper and lower alarms and warnings).

The alarm behavior is described in detail in Fault codes and corrective actions (Page 364).

Hysteresis is used to adjust the tolerance by falling below or rising above the limit as described above.

8.1.4.1 Alarms

Level

The level alarm is the most common. Use this alarm to warn you when the process is in danger of being upset due to high or low levels. Generally, the four alarms used are:

- Above alarm limit
- Above warning limit
- Below warning limit
- Below alarm limit

These alarms are available per process value and are indexed per measurement point.

Set the common parameters

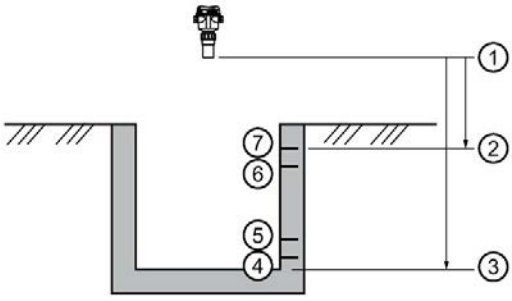

① Sensor reference point
② Upper calibration point
③ Lower calibration point
④ Lower alarm limit
⑤ Lower warning limit
⑥ Upper warning limit
⑦ Upper alarm limit

Prerequisite:

You must know the details of your application and substitute the values for the sample values provided. If you are bench testing the unit, set your test values to be the same as the sample values.

Wizard step	Parameter	Sample value	Description
Select application		Level	Application = Level
Length units	Units	m	Units = m (meters)
Sensor type	Sensor type	SITRANS LR110	Connected sensor type = LR110
Calibration	Lower calibration point	1.8	Lower calibration point = 1.8 m
	Upper calibration point	1.4	Upper calibration point = 1.4 m
	Response rate (available via wizard only)	Medium	Maximum process speed = Medium (1.0 m/min)
	Material type	Liquid	Material type = Liquid

This example assumes a single-point device. With a dual-point device, parameters (and alarms) must be configured for each measurement point.

Setting simple level alarms

For each measurement point, select the process value alarms to enable, then set the limits to be used.

Parameter	Description	Sample setting
Setup>Process values>Level (point 1)>Enable alarms (2.2.1.3) (Page 207)	Select the alarms to enable (filled box = alarm enabled).	Level (point 1) above alarm limit Level (point 1) above warning limit Level (point 1) below warning limit Level (point 1) below alarm limit
Upper alarm limit (2.2.1.4) (Page 208)	Set value for high alarm limit.	1.3 m
Upper warning limit (2.2.1.5) (Page 208)	Set value for high warning limit.	1.2 m
Lower warning limit (2.2.1.6) (Page 208)	Set value for low warning limit.	0.3 m
Lower alarm limit (2.2.1.7) (Page 208)	Set value for low alarm limit.	0.2 m

High and low level alarms can be used with all process values (Level, Space, Distance, Volume, Volume flow, Head, Sensor temperature) to activate an alarm, when the process value exceeds or falls below a set limit. See Device status (3.2.1) (Page 292) to view the current state of an alarm.

In the example above, an alarm will be activated when either an alarm or warning limit is exceeded.

One or both may be used. For example, use a warning limit to activate an alarm so that process level can be checked. Additionally, set an alarm limit to activate an alarm and initiate control of another device, such as activating a relay. See Inputs and outputs (Page 133) to configure the control.

In-bounds/Out-of-bounds Range

Use the bounded range alarms to detect when the level is inside or outside the range.

Setting an Out-of-bounds Alarm

Parameter	Description	Sample setting
Setup>Process values>Level (point 1)>Enable alarms (2.2.1.3) (Page 207)	Select the alarm to enable.	Level (point 1) out-of-bounds alarm
Upper alarm limit (2.2.1.4) (Page 208)	Set high level value.	1.3 m
Lower alarm limit (2.2.1.7) (Page 208)	Set low level value.	0.3 m
Hysteresis (2.2.1.8) (Page 208)	Set hysteresis.	0.05 m*

* Hysteresis is only considered for clearing the alarm (not in setting the alarm), to avoid alarms rapidly switching on and off due to small changes in the level.

Results:

- Activates alarm above 1.3 m and below 0.3 m
- Resets alarm below 1.25 m and above 0.35 m

See Device status (3.2.1) (Page 292) to view the current state of an alarm.

Setting an In-bounds Alarm

Parameter	Description	Sample setting
Setup>Process values>Level (point 1)>Enable alarms (2.2.1.3) (Page 207)	Select the alarm to enable.	Level (point 1) in-bounds alarm
Upper alarm limit (2.2.1.4) (Page 208)	Set high level value.	1.3 m
Lower alarm limit (2.2.1.7) (Page 208)	Set low level value.	0.3 m
Hysteresis (2.2.1.8) (Page 208)	Set hysteresis.	0.05 m*

* Hysteresis is only considered for clearing the alarm (not in setting the alarm), to avoid alarms rapidly switching on and off due to small changes in the level.

Results:

- Activates alarm below 1.3 m and above 0.3 m
- Resets alarm above 1.35 m and below 0.25 m

See Device status (3.2.1) (Page 292) to view the current state of an alarm.

See Inputs and outputs (Page 133) to configure any control required beyond alarm.

Rate

Rate alarms can activate an alarm if the vessel is filling or emptying too quickly.

The current filling or emptying rate can be read at Rate of change (2.1.8.1) (Page 200)

Setting a filling rate alarm

Parameter	Description	Sample setting
Setup>Sensor>Enable diagnostics (2.1.18) (Page 205)	Select the diagnostic to enable.	Filling too quickly
Fill rate indicator limit (2.1.8.2) (Page 200)	Set value to activate indicator on local display.	.9 m/min.
Fill rate alarm limit (2.1.8.4) (Page 200)	Set value to activate alarm.	1.0 m/min.

These settings turn on the local display filling indicator when the vessel or reservoir is filling faster than .9 meters per minute, and activates an alarm when the reservoir is filling faster than 1.0 meter per minute. See illustration of indicator in View type: Measurement (Page 107).

Setting an emptying rate alarm

Parameter	Description	Sample setting
Setup>Sensor>Enable diagnostics (2.1.18) (Page 205)	Select the diagnostic to enable.	Emptying too quickly
Empty rate indicator limit (2.1.8.3) (Page 200)	Set value to activate indicator on local display.	.9 m/min.
Empty rate alarm limit (2.1.8.5) (Page 201)	Set value to activate alarm.	1.0 m/min.

These settings turn on the local display emptying indicator when the vessel or reservoir is emptying faster than .9 meters per minute, and activates an alarm when the reservoir is emptying faster than 1.0 meter per minute. See illustration of indicator in View type: Measurement (Page 107).

See Inputs and outputs (Page 133) to configure any control required beyond diagnostic.

8.1.5 Totalizers

The device has four (internal) totalizers [Totalizer 1 (2.3.1) (Page 222)]. They can be configured for volume flow or pumped volume [Process value (2.3.1.1) (Page 222)], and each totalizer can be monitored separately [Limit monitoring (2.3.1.12) (Page 225)], as well as preset [Preset (2.3.1.11) (Page 225)] or reset [Reset (2.3.1.9) (Page 224), Daily reset (at midnight) (2.3.1.13) (Page 226), or Auto reset (2.3.1.14) (Page 226)].

Totalized values are shown on the local display views as "TOT1", "TOT2", "TOT3", "TOT4".

For information on external totalizers, see External totalizers and flow samplers (Page 140).

8.1.6 Inputs and outputs

8.1.6.1 Current outputs

The current output is proportional to material level in the range 0/4 to 20 mA. 0% and 100% are percentages of the full-scale reading (m, cm, mm, ft, in). Typically, current output is set so that 0/4 mA equals 0% and 20 mA equals 100%.

Parameter Process value (2.4.1.4) (Page 229) (set per current output), controls the current output and applies any relevant scaling. By default, the process value is set to Distance. Other options are Level, Space, Head, Volume, or Volume flow.

Current output control

The device has three current outputs, used for communication with other devices:

- Current output (HART) (HART communication option) - channel 1
- Current output 1 - channel 2
- Current output 2 - channel 3

For channel 1 the loop current mode can be set to "4...20 mA", or set to "Multidrop mode" for connecting multiple HART devices.

Three options exist to set the loop current scale for each channel, which sets the nominal range of current output, saturation limits, and fault currents:

- 4 ... 20 mA NAMUR
- 4 ... 20 mA US
- 0 ... 20 mA

An additional option exists to set the loop current scale for Current output 1 and Current output 2:

- 4 ... 20 mA

Current output ranges

Current output ranges vary per the loop current scale selected. Choose one of the four options below, based on the specifications and requirements of the device to which you are connecting, such as a PLC.

Note that "4 to 20 mA" (fourth option below) is not available for Current output (HART) - channel 1.

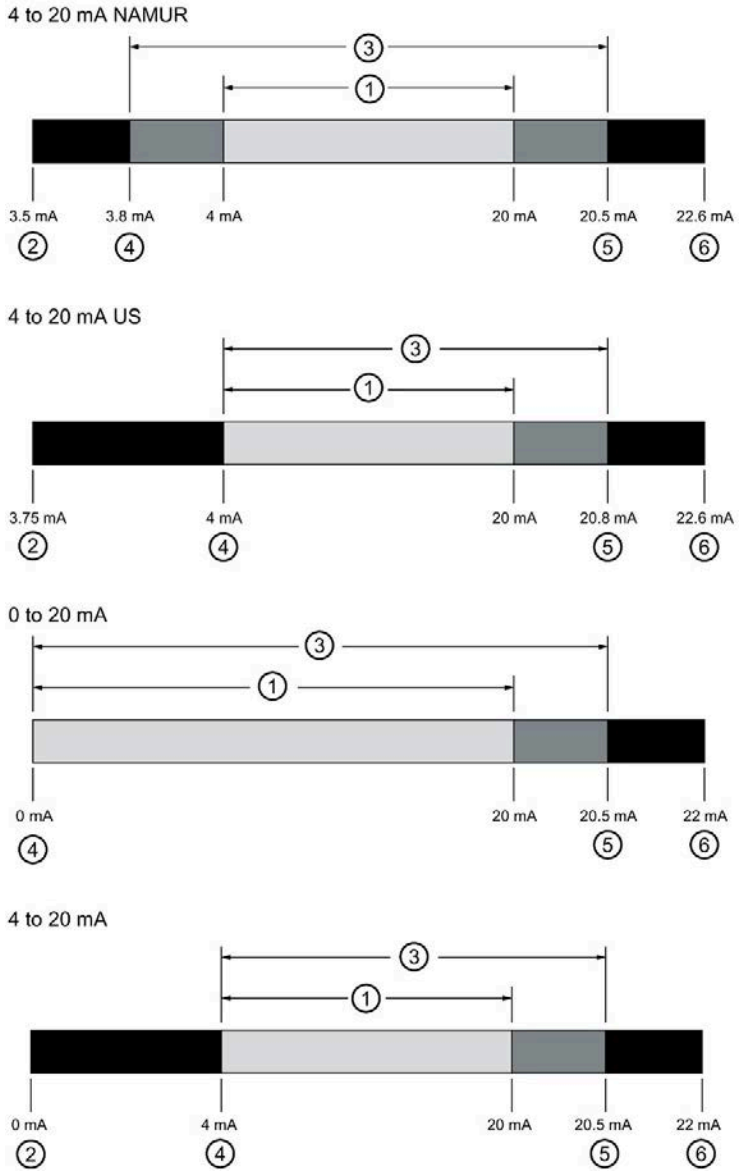

① Normal operation [1)]
② Fail-safe low value (internal device setting for Lower fault current) [2)]
③ Extended current range [3)]
④ Lower saturation limit (internal device setting)
⑤ Upper saturation limit (internal device setting)
⑥ Fail-safe high value (internal device setting for Upper fault current)

[1)] Current range during normal operation based on process value limits, such as lower and upper calibration points.

[2)] Fail-safe low value is not available for "0 to 20 mA"

[3)] Current range when sensor value is below or above process value limits, such as lower and upper calibration points. The minimum and maximum values of this range are the saturation limits.

Example using 4 to 20 mA NAMUR:

Configuring the current output to send a 4 to 20 mA signal corresponding to a scaled value of 10% to 90% of maximum process level on a 12 m sensor:

Parameter	Sample value	Description
Process value (per measurement point)	Level	Sets mA proportional to level reading.
Loop current scale	4 ... 20 mA NAMUR	Sets nominal range of Current output (HART) channel to NAMUR 4 o 20 mA.
Lower range value	1.2	Sets 4 mA at process level equal to 10% of maximum ("Lower calibration point" minus "Upper calibration point").*
Upper range value	10.8	Sets 20 mA at process level equal to 90% of maximum ("Lower calibration point" minus "Upper calibration point").**
Device default for lower saturation limit	3.8	Sets lower limit for saturation range, past which the loop current cannot decrease.
Device default for upper saturation limit	20.5	Sets upper limit for saturation range, past which the loop current cannot increase.
Fail-safe behavior	Lower fault current	Sets behavior in case of a fail-safe state.***

* If the level reading drops below 1.2 m, the mA output drops below 4 mA.

** If the level reading rises above 10.8 m, the mA output rises above 20 mA.

*** If fail-safe state occurs, the mA output will read 3.5 mA (NAMUR value for parameter "Lower fault current").

8.1.6.2 Relay outputs

General Introduction

One, three, or six relays are provided with the device, with extensive functions for each.

Relays are the primary controls of external devices such as pumps or alarms. Each one may be independently assigned to one function and has a corresponding status symbol on the local display.

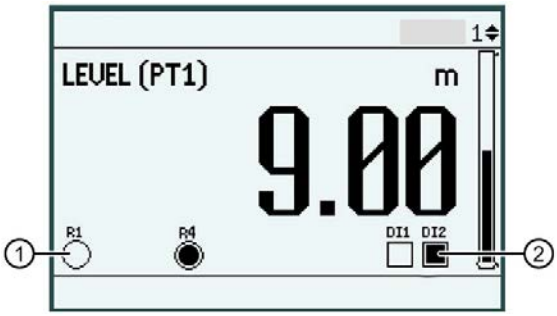

① Relay symbols:
Relay 1, 4 programmed
Relay 2, 3, 5 and 6 not programmed *
Relay 1 inactive
Relay 4 active

② Digital input symbols:
DI 1, 2 programmed
DI 1 inactive
DI 2 active

* Symbol will not show on display for relay or digital input (DI) that is not programmed.

Relay function

Each relay on the device can be programmed for a wide range of functions according to your application needs. The available function categories are Alarm, Pump, External totalizer or sampler, Time of day, Elapsed time, and Basic control.

The following chart shows the various functions under normal operating conditions.

Category	Recommended relay "Polarity"	Function (normal operating conditions)
Alarm	Active low level **(See note below)**	Alarm OFF = Display icon is empty ○ = relay coil energized (Normally Open contact is closed) Alarm ON = Display icon is full ● = relay coil de-energized (Normally Open contact is open)
Alarm	N/A	Loss of power = relay coil de-energized (Normally Open contact is open)
Pump	Active high level	Pump ON = Display icon is full ● = relay coil energized (Normally Open contact is closed) Pump OFF = Display icon is empty ○ = relay coil de-energized (Normally Open contact is open)
External totalizer	Active high level	Each time value in parameter "Amount" is reached, contact will close = Display icon is full ● = relay coil energized (Normally Open contact will close for duration: set in parameter "Off-delay")
External sampler	Active high level	Each time value in parameter "Amount" is reached, or "Interval" expires (whichever occurs first), contact will close = Display icon is full ● = relay coil energized (Normally Open contact will close for duration: set in parameter "Off-delay")
Time of day relay	Active high level	When the current time reaches the time set in parameter "Activation time", contact will close = Display icon is full ● = relay coil energized (Normally Open contact will close for duration: set in parameter "Duration").
Elapsed time relay	Active high level	Each time value in parameter "Interval" expires, contact will close = Display icon is full ● = relay coil energized (Normally Open contact will close for duration: set in parameter "Off-delay").
Basic control	Active high level	Relay ON = Display icon is full ● = relay coil energized (Normally Open contact is closed) Relay OFF = Display icon is empty ○ = relay coil de-energized (Normally Open contact is open)

Note

Proper setting to activate an alarm condition

To set an **alarm** relay to activate in the same manner as when there is a loss of power, it is recommended to set the "Polarity" parameter to "Active low level". (Device default is "Active high level".)

CAUTION

Relay fail-safe takes precedence

The relay fail-safe functionality takes precedence over the relay functions. This means that when a fail-safe condition exists, the relay will (if configured) take on the state defined by the fail-safe behavior setting rather than the state determined by the assigned relay function.

This could be used for example, to force a pump relay to turn off if the sensor reports a loss of echo (LOE) condition on the measurement point.

Alarms

To use the alarm function, the alarm limits (and hysteresis if desired) for the corresponding process value must be set.

If the measurement reaches the value in parameter "Upper alarm limit", a high alarm is activated. The high alarm is removed once the measurement falls below the upper alarm limit, minus the hysteresis value.

If the measurement reaches the value in parameter "Lower alarm limit", a low alarm is activated. The low alarm is removed once the measurement rises above the lower alarm limit, plus the hysteresis value.

The dead band or hysteresis is the difference between the on and off activation points. For in-bounds and out-of-bounds level alarms, the hysteresis is set at ± 2% of span from either boundary.

For each relay output (e.g. "Relay output 1"):

- Set parameter "Mode" to "Alarms and diagnostics"
- Set parameter "Status signals" to use NAMUR or Siemens standard alarm classes
- Next, enable process alarms/diagnostics (Sensor, Process, Totalizer, and Inputs and outputs)

See Alarms (Page 130) to set the corresponding alarm limits per process value.

See Limit monitoring (2.3.1.12) (Page 225) to enable alarms and set limits per totalizer.

See Enable diagnostics (2.4.1.15) (Page 231) to set per current output, and Sensor diagnostics (2.4.6.3) (Page 237) to set per measurement point.

Note

Relays assigned by an application

If a relay has been assigned through an application, such as "Pump control" or "Time of day relay", the parameter "Mode" per output relay will have a setting of "Application setup".

Pumps

To control a pump via a relay, run the wizard Pump control (Page 84). Next, continue configuration in menu Pump control (2.5.4) (Page 251). (Further details on overall pump control, can be found in the menu Application (Page 145).)

A relay is selected for each pump (per measurement point). On and off setpoints, and service controls are selected per pump.

Example:

Parameter	Sample value	Description
Pump 1 (2.5.4.10)	Relay output 1	Pump 1 is assigned to relay output 1.
On setpoint pump 1 (2.5.4.11)	11 m	Pump 1 will activate when medium level reaches 11 m.
Off setpoint pump 1 (2.4.5.12)	8 m	Pump 1 will deactivate when medium level reaches 8 m.
Service ratio pump 1 (2.5.4.13)	1	Pump 1 will use a service ratio of 1 in relation to other pumps on the same measurement point.
Run-on duration pump 1 (2.5.4.14)	0 s	Pump 1 will not run-on.

Pump setpoints and functionality

The setpoint can be an ON or OFF setpoint related to level.

If the ON setpoint is higher than the OFF setpoint, the relay operates as:

- Pump down control

In pump down, the pump turns on when the level rises to the ON setpoint and turns off when the level lowers to the OFF setpoint.

If the ON setpoint is lower than the OFF setpoint, the relay operates as:

- Pump up control

In pump up, the pump turns on when the level lowers to the ON setpoint and goes off when the level rises to the OFF setpoint.

Note

On/Off setpoints per application

The setpoints must be set correctly for the application:

- For a pump down application, *all* of the off setpoints must be less than *all* of the on setpoints,
- For a pump up application, *all* of the on setpoints must be less than *all* of the off setpoints,

If application does not fit within the above constraints, use Basic control (Page 182).

The ON and OFF setpoints cannot be the same on an individual relay but may be common to other relays. The dead band or hysteresis is the difference between the ON and OFF setpoints. For in-bounds and out-of-bounds level alarms, the hysteresis is set at ± 2% of span from either boundary.

The setpoint can also be a timed setpoint based on interval and duration.

Functions affected by setpoint are configured by parameters that determine the application requirements such as timing. Such parameters include:

- Pump run-on interval (2.5.4.7) (Page 252)
- Delay between starts (2.5.4.8) (Page 253)
- Power resumption delay (2.5.4.9) (Page 253)

For more information, see Setting a pump to run-on (Page 158) and Setting the pump start delays (Page 158).

Note

Pumps deactivate on bad status

Pumps work based on the process value Level. When there is a bad status on this process value, pumps will turn off until the bad status is cleared.

A bad status is shown:

- On the local display, by the deactivation of a relay icon that is assigned to a pump
- On a communication network, by the loop current changing to the set fail-safe value
- By any other linked output (such as totalizers, external totalizers/samplers, current outputs) going to its respective fail-safe state.

Relay-related parameters

Some parameters affect how relays react during normal conditions:

Upper and Lower alarm limits	When a limit is reached, the corresponding action is taken. Upper and lower alarm limits are set for process value alarms.
On and Off set-points	Sets the process point at which the relay is activated (ON setpoint) then reset (OFF setpoint). These setpoints are set separately for each pump within each measurement point.
Polarity	Sets the default state of the relay function. Reverses the logic (normally-open to normally-closed or vice versa). See Relay function (Page 137) for recommended settings. Use polarity with alarm relays to ensure they are setup for fail-safe conditions. Set up to behave in the same manner as if power was lost.

External totalizers and flow samplers

External totalizers are simple counters which generate relay contacts produced by the device, when connected to a relay set in "External totalizer" mode. They are generally used to keep track of volume flow (Open Channel Monitoring) or pumped volume totals. Note that both of these values are also stored in the device and are available through communication.

Flow samplers are devices which take a sample of liquid when triggered by a relay. These samples are used to monitor water quality over time. Flow samplers can be driven by OCM volume flow or by relay contact when relay set in "External sampler" mode, depending on the application requirements.

Configuration

To control an external totalizer or sampler via a relay, first run the appropriate commissioning wizard (Volume flow wizard to totalize/sample Volume flow, or Volume wizard and Pump control wizard to totalize/sample Pumped volume). Next, select the corresponding setting ("External totalizer" or "External sampler") under parameter "Mode", per relay output (and per measurement point). Then configure the external totalizer or sampler.

Note

Ensure correct totalized output

In case of running totalizers when a parameter change is required, cycle the power to ensure correct contact output of the relay between parameter changes.

Note

Relays assigned by an application

If a relay has been assigned through an application, such as "Pump control" or "Time of day relay", the parameter "Mode" per output relay will have a setting of "Application setup".

Parameter	Sample value	Description
Mode (2.4.6.1)	External totalizer	Relay output 1 is set to control an external totalizer.
Process value (2.4.6.8)	Pumped volume (point 1)	Pumped volume is measured.*
Units (2.4.6.9)	m^3	Measurement units set to cubic meters.
Amount (2.4.6.10)	1	Parameter "Amount" is required for external totalizer and external sampler. A relay contact is generated for every 1 cubic meter.
Interval (2.4.8.11)	1	Parameter "Interval" is required for external sampler. A relay contact is generated every 1 hour.
Fail-safe behavior (2.4.6.12)	Pause counting	Totalizer counting will pause in case of a faulty process value.
Polarity (2.4.6.13)	Active high level	Normally open contact will close when "Amount" or "Interval" is reached (whichever comes first).
Off-delay (2.4.6.15)	5 s	A five second OFF delay is set. This also sets the duration of the relay contact to five seconds.
Forced value (2.4.6.16)	0	Sets specific loop current used when output is forced.

* When measuring Volume flow, relay contacts occur to update the external totalizer each time the value in parameter "Amount" is reached.

When measuring Pumped volume, after each pump cycle completes, relay contacts occur to update the external totalizer based on pumped volume for the duration of the pump cycle.

For more details, refer to Totalizing pumped volume (Page 157).

Relay contacts

Both the open and closed times for the relay contact are provided by relay duration (set in parameter "Off-delay"). Partial units are added to the next pump cycle.

Example:

A relay set up to make one contact for every cubic meter (m^3) of liquid.

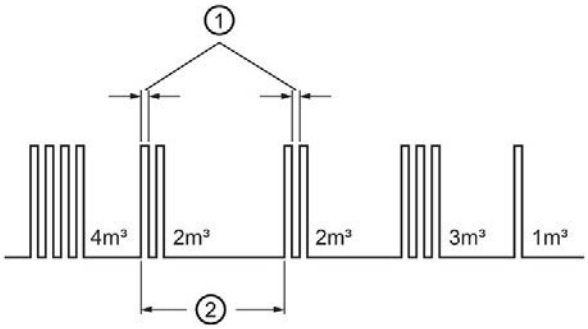

① Relay duration (pulse width)

② Pump cycle

Elapsed time relay

A relay can also be controlled by time, such as elapsed time.

Parameter	Sample value	Description
Mode (2.4.6.1) (Page 236)	Elapsed time	Sets the mode (per relay output) to "Elapsed time"
Interval (2.4.6.11) (Page 246)	24	Activates the relay every 24 hours
Polarity (2.4.6.14) (Page 247)	Active high level	Use (if necessary) to change the behavior of the relay assigned to the elapsed time control. Default: "Active high level" (Normally Open contact will close when time in parameter "Interval" expires. Contact is closed for duration set in parameter Off-delay".)
Off-delay (2.4.6.16) (Page 247)	5	A five second OFF delay is set. This also sets the duration of the relay contact to five seconds.
Forced value (2.4.6.17) (Page 247)	0	Sets specific loop current used when output is forced.

8.1.6.3 Digital inputs

SITRANS LT500 has two digital inputs to trigger or alter the way it controls devices.

A digital input (DI) can be set to drive various functions. Setup of these functions is performed from different menus in the device.

For example:

- Menu "Inputs and outputs" (2.4) - From here, configure a digital input to reset, pause/resume totalizer(s), force outputs, freeze process values, or acknowledge diagnostics. Select an input function to enable the digital input (Input function (2.4.4.1) (Page 235) for DI1), then set the polarity (Polarity (2.4.4.2) (Page 235) for DI1) if required for the application.
- Menu "Sensor" (2.1) - From here, enable a DI to configure a sensor override. See Sensor override (Page 143).
- Menu "Pump control" (2.4) - From here, enable a DI to configure a pump interlock. See Pump interlocks (Page 145).

The polarity of the digital input can be reversed for any of these functions, if necessary for the application. Use parameter "Polarity" as listed above.

Digital inputs can also be simulated through menu "Simulation" (3.8) (Digital input 1 (3.8.3.4) (Page 319) for DI1).

Sensor override

Sensor override provides the option of overriding the input (signal from a sensor) with another contacting point level device, such as the Pointek CLS200, to determine the level output.

The level process value reading is fixed at the programmed switch level until the digital input is released; the override is then removed, and the device returns to normal measurement.

Sensor override functionality is particularly useful in wet-wells and reservoirs that use pumps:

- Place a backup level switch high in a vessel to indicate when it is about to overflow
- Place a backup level switch low in a vessel, to indicate when it is almost empty.

Basic operation

After connecting a point level device to the digital input, configuring a "Sensor override" involves two steps:

1. Enable sensor override by selecting a digital input in parameter "Sensor override input" (2.1.10) that is connected to the point-level device.
2. Select an override value in parameter "Sensor override value" (2.1.11). This will be the level output produced by the device when the sensor override condition is present.

It may also be necessary to invert the logic of the digital input, which is possible through parameter "Polarity" (2.4.4.2).

Sensor override parameters

Sensor override input (2.1.10)

Enables sensor override and sets the discrete input as the source of a level reading override.

Sensor override value (2.1.11)

Substitutes value for current reading when sensor override is enabled. Value is added in level units and impacts the Level process value and process values derived from level, such as:

- Space
- Level difference
- Level average
- Head (level in OCM)
- Volume
- Volume flow

Example

SITRANS LT500 is configured for a level measurement. In the same application, digital input 2 is connected to a high level backup switch at a level value of 4.3 m.

Parameter	Sample value
Sensor override input (2.1.10)	Digital input 2
Sensor override value (2.1.11)	4.3

When the level rises to 4.3 m and the switch connected to digital input 2 is activated, the reading is forced to 4.3 m where it stays until the switch is de-activated.

Sensor override time delay (2.1.12)

Sets the time (in seconds) used to delay the override condition input.

Sensor override conditions

When the digital input activates, the level output will take on the value in parameter "Sensor override value" after the delay setting. The local display on the SITRANS LT500 will indicate that the digital input has been activated (if the display view is set to a view type that shows DI symbols). When a sensor override condition clears (the digital input is deactivated), the level will return to the value determined from the remote sensor or, if no echo is available, the device will enter the fail-safe condition.

Effect of sensor override

The level produced by a sensor override condition completely replaces the level that would otherwise be produced by normal echo processing algorithms.

This means that the sensor override will:

- Drive all readings that depend on Level (for example: space, distance, and flow)
- Drive level alarms
- Appear in system logs
- Affect pump control
- Affect external totalizers (Volume flow and Pumped volume)

Pump interlocks

Digital inputs can be used to supply pump information to the SITRANS LT500 to set actions that will occur when a pump is determined to be in a failed state.

For an example of how to configure a pump interlock, see Pump control interlocks (Page 156).

8.1.7 Application

This section contains applications that require further configuration/setup than say, for a simple Level, Space, Distance application.

Here, you can configure such things as:

- A standard or custom vessel for a volume application
- Settings to control a pump application, including assigned relays
- Settings to control energy savings in a pump application
- A standard or custom primary measuring device for a volume flow application
- Settings for a relay controlled by time (time of day relay)

All of the above can be configured for each measurement point (dependent on single- or dual-point version), with the exception of a time of day relay. There can only be one time of day relay (independent of measurement point).

8.1.7.1 Volume

Volume is used in two situations:

1. To calculate and display Volume in addition to Level.
2. To calculate Pumped volume to accomplish the following:

- Totalize the volume of material that is pumped out of the wet well

Readings

When using volume, volume values are presented in default units of liters, set in "Units" for process value Volume.

If the value is too large for the local display, change the setting to a larger unit.

Vessel shape and volume calculation

The device can be configured to suit many common vessel shapes. See parameter Vessel shape (Page 72). Whenever possible, use one of the pre-defined selections. Each vessel shape uses the upper and lower calibration points in its calculations of volume. See Quick commissioning: Volume (Page 68) for an illustration.

If one of the pre-defined selections is not applicable, a custom volume calculation can be used. (Configure a custom application by setting parameter "Vessel shape" to option "Custom", then define your vessel shape using Custom volume table 1 to 16 (2.5.2) (Page 250).) For more details, see Volume calculation (Page 417).

Some vessel shapes also require extra dimensions to calculate the volume. Do not estimate these values as they must be exact to ensure the accuracy of your volume calculations.

Example:

To configure volume for a vessel with a half-sphere bottom, set the following:

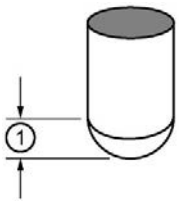

① Vessel dimension A

Parameter	Sample value	Description
Vessel shape	Half sphere bottom vessel	Sets correct vessel shape
Maximum volume	100	Sets maximum volume of 100 m^3
Vessel dimension A	1.3	Sets dimension A to 1.3 m

NOTICE

Example outcome

- The default reading changes to a range of 0 to 100 (parameter Maximum volume (Page 74)).
- The process empty value is still measured to the bottom of the vessel (parameter Lower calibration point (Page 71)), not the top (parameter Vessel dimension A (2.5.1.3) (Page 250)).

8.1.7.2 Pump control

SITRANS LT500 has pump control functionality to solve nearly any water/wastewater application. To set up pump control for simple applications, use the wizard Pump control (Page 84) in Quick commissioning.

For further configuration, see menu Pump control (2.5.4) (Page 251).

Pump control options

Methods of pump control are dependent on two variables:

- Pump sequencing: Indicates in what sequence pumps are started; using Fixed, Alternate, or Service ratio setpoints.
- Pump assist or backup: Indicates whether new pumps start and run with any currently running pumps (most common) or whether new pumps start and shut off currently running pumps; using Assist or Backup duty.

Pump control algorithms

Algorithms are used to provide six modes of pump control. They can be used to start multiple pumps (assist) or one pump at a time (backup). These six modes can be grouped into three main methods of pump control: Fixed, Alternate, and Service ratio.

(See parameter Mode (2.5.4.1) (Page 251) in the "Pump control" menu.)

Fixed

Starts pumps based on individual setpoints and always starts and stops the same pumps in the same sequence: Use settings "Fixed duty assist", and "Fixed duty backup".

Alternate

Starts pumps based on the duty schedule and always leads with a new pump: Use settings "Alternate duty assist", and "Alternate duty backup".

Service Ratio

Starts pumps based on user-defined ratio of running time: Use settings "Service ratio duty assist", and "Service ratio duty backup".

Setting a pump down (wet well) application

Setting a group of two pumps to pump down a wet well.

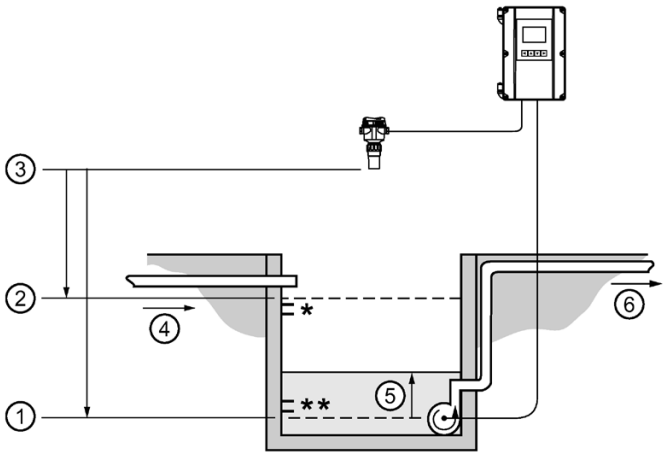

① Lower calibration point
② Upper calibration point
③ Sensor reference point
④ Inflow
⑤ Level
⑥ Outflow
* On setpoint Pump 1 / Pump 2
** Off setpoint Pump 1 / Pump 2

Set the common parameters

Prerequisite: Substitute the details of your application in place of the sample values provided. If you are bench testing the device, set your test values to be the same as the sample values.

Parameter	Sample value
Response rate (Page 66)	Medium
Sensor type (Page 65)	SITRANS Probe LU240
Length units (Page 64)	m
Lower calibration point (Page 66)	1.8
Upper calibration point (Page 66)	0.4

Alternate duty assist

Parameter	Sample value	Description
Mode (2.5.4.1) (Page 251)	Alternate duty assist	Sets the control algorithm used to activate the pump relay. Multiple pumps can run simultaneously.

Set the ON setpoints

Parameter	Sample value[1)]	Description
On setpoint pump 1 (2.5.4.13) (Page 254)	1.0 m*	Sets the level at which pump 1 turns on. The first cycle will use this setpoint. Subsequent cycles rotate the setpoint among the pumps. For example: In cycle 1, pump 1 turns on at 1 m. In the next cycle, pump 2 will turn on at 1 m.
On setpoint pump 2 (2.5.4.17)	1.1 m*	Sets the level at which pump 2 turns on.

[1)] Sample values denoted by asterisks in illustration on Setting a pump down (wet well) application (Page 148).

Set the OFF setpoints

Parameter	Sample value[1)]	Description
Off setpoint pump 1 (2.5.4.14) (Page 254)	0.4 m**	Sets the level at which pump 1 turns off. The first cycle will use this setpoint. Subsequent cycles rotate the setpoint among the pumps. For example: In cycle 1, pump 1 turns off at 0.4 m. In the next cycle, pump 2 will turn off at 0.4 m.
Off setpoint pump 2 (2.5.4.18)	0.4 m**	Sets the level at which pump 2 turns off.

[1)] Sample values denoted by asterisks in illustration on Setting a pump down (wet well) application (Page 148).

Note

On/Off setpoints per application

The setpoints must be set correctly for the application:

- For a pump down application, *all* of the off setpoints must be less than *all* of the on setpoints.

Other pump control algorithms

Alternate duty backup

Parameter	Sample value	Description
Mode (2.5.4.1) (Page 251)	Alternate duty backup	Sets the control algorithm used to activate the pump relay. Only one pump can run at a time.

Set the ON setpoints

Parameter	Sample value[1)]	Description
On setpoint pump 1 (2.5.4.13) (Page 254)	1.2 m*	Sets the level at which pump 1 turns on. The first cycle will use this setpoint. Subsequent cycles rotate the setpoint among the pumps.
On setpoint pump 2 (2.5.4.17)	1.3 m*	Sets the level at which pump 2 turns on.

[1)] Sample values denoted by asterisks in illustration on Setting a pump down (wet well) application (Page 148).

Set the OFF setpoints

Parameter	Sample value[1)]	Description
Off setpoint pump 1 (2.5.4.14) (Page 254)	0.4 m**	Sets the level at which pump 1 turns off. The first cycle will use this setpoint. Subsequent cycles rotate the setpoint among the pumps.
Off setpoint pump 2 (2.5.4.18)	0.4 m**	Sets the level at which pump 2 turns off.

[1)] Sample values denoted by asterisks in illustration on Setting a pump down (wet well) application (Page 148).

Fixed duty assist

Parameter	Sample value	Description
Mode (2.5.4.1) (Page 251)	Fixed duty assist	Sets the control algorithm used to activate the pump relay. In duty assist, multiple pumps can run at a time.

Set the ON setpoints

Parameter	Sample value	Description
On setpoint pump 1 (2.5.4.13) (Page 254)	1.2 m	Sets the level at which pump 1 turns on.
On setpoint pump 2 (2.5.4.17)	1.3 m	Sets the level at which pump 2 turns on.

Set the OFF setpoints

Parameter	Sample value	Description
Off setpoint pump 1 (2.5.4.14) (Page 254)	0.4 m	Sets the level at which pump 1 turns off.
Off setpoint pump 2 (2.5.4.18)	0.4 m	Sets the level at which pump 2 turns off.

Fixed duty backup

Parameter	Sample value	Description
Mode (2.5.4.1) (Page 251)	Fixed duty backup	Sets the control algorithm used to activate the pump relay. Only one pump can run at a time.

Set the ON setpoints

Parameter	Sample value	Description
On setpoint pump 1 (2.5.4.13) (Page 254)	1.2 m	Sets the level at which pump 1 turns on.
On setpoint pump 2 (2.5.4.17)	1.3 m	Sets the level at which pump 2 turns on.

Set the OFF setpoints

Parameter	Sample value	Description
Off setpoint pump 1 (2.5.4.14) (Page 254)	0.4 m	Sets the level at which pump 1 turns off.
Off setpoint pump 2 (2.5.4.18)	0.4 m	Sets the level at which pump 2 turns off.

Service ratio duty assist

Parameter	Sample value	Description
Mode (2.5.4.1) (Page 251)	Service ratio duty assist	Sets the control algorithm used to activate the pump relay. Multiple pumps can run simultaneously. Pump usage is based on RUN time rather than last used.
Service ratio pump 1 (2.5.4.15) (Page 254)	25	Sets the ratio to: 25% for pump 1, i.e. pump 1 will run 25% of the time.
Service ratio pump 2 (2.5.4.19)	75	Sets the ratio to: 75% for pump 2, i.e. pump 2 will run 75% of the time

Set the ON setpoints

Parameter	Sample value	Description
On setpoint pump 1 (2.5.4.13) (Page 254)	1.2 m	Sets the level at which the first pump turns on.
On setpoint pump 2 (2.5.4.17)	1.3 m	Sets the level at which the next pump turns on.

Set the OFF setpoints

Parameter	Sample value	Description
Off setpoint pump 1 (2.5.4.14) (Page 254)	0.4 m	Sets the level at which the first pump turns off.
Off setpoint pump 2 (2.5.4.18)	0.4 m	Sets the level at which the next pump turns off.

Service ratio duty backup

Parameter	Sample value	Description
Mode (2.5.4.1) (Page 251)	Service ratio duty backup	Sets the control algorithm used to activate the pump relay. Only one pump can run at a time. Pump usage is based on RUN time rather than last used.
Service ratio pump 1 (2.5.4.15) (Page 254)	25	Sets the ratio to: 25% for pump 1, i.e. pump 1 will run 25% of the time.
Service ratio pump 2 (2.5.4.19)	75	Sets the ratio to: 75% for pump 2, i.e. pump 2 will run 75% of the time

Set the ON setpoints

Parameter	Sample value	Description
On setpoint pump 1 (2.5.4.13) (Page 254)	1.2 m	Sets the level at which the first pump turns on.
On setpoint pump 2 (2.5.4.17)	1.3 m	Sets the level at which the next pump turns on.

Set the OFF setpoints

Parameter	Sample value	Description
Off setpoint pump 1 (2.5.4.14) (Page 254)	0.4 m	Sets the level at which the first pump turns off.
Off setpoint pump 2 (2.5.4.18)	0.4 m	Sets the level at which the next pump turns off.

Note

- The SITRANS LT500 will not sacrifice other pumping strategies to ensure that the service ratio is held true.
- If the pump ratios are set to the same value, then the ratio equals 1:1 and all pumps are used equally (default).

When a pump start is required (ON setpoint), the pump with the fewest running hours (with respect to the assigned ratio values) starts.

Conversely, when a pump stop is required (OFF setpoint), if multiple pumps are running simultaneously, the pump with the most running hours (as compared to the assigned ratio values) stops.

Setting a pump up (reservoir) group

Sets a group of two pumps to pump up a reservoir.

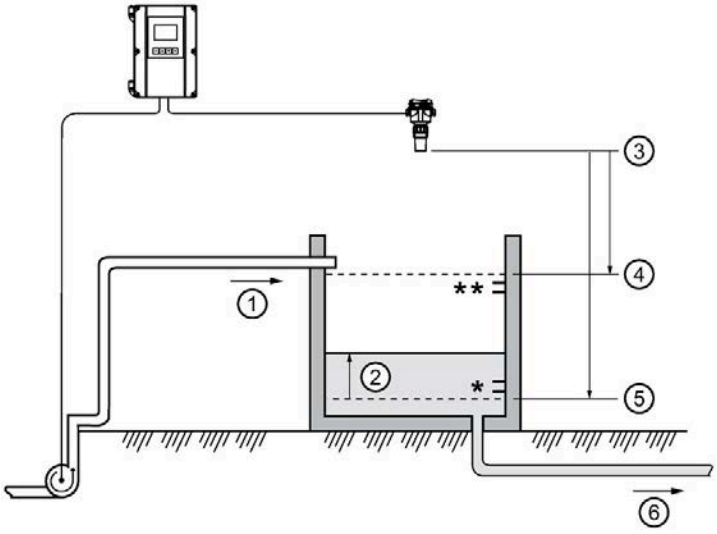

① Inflow
② Level
③ Sensor reference point
④ Upper calibration point
⑤ Lower calibration point
⑥ Outflow
* On setpoint Pump 1 / Pump 2
** Off setpoint Pump 1 / Pump 2

Set the common parameters

Prerequisite: Substitute the details of your application in place of the sample values provided. If you are bench testing the device, set your test values to be the same as the sample values.

Parameter	Sample value
Response rate (Page 66)	Medium
Sensor type (Page 65)	SITRANS Probe LU240
Length units (Page 64)	m
Lower calibration point (Page 66)	1.8
Upper calibration point (Page 66)	0.4

Alternate duty assist

Parameter	Sample value	Description
Mode (2.5.4.1) (Page 251)	Alternate duty assist	Sets the control algorithm used to activate the pump relays.

Set the ON setpoints

Parameter	Sample value[1)]	Description
On setpoint pump 1 (2.5.4.13) (Page 254)	0.4 m*	Sets the level at which pump 1 turns on. The first cycle will use this setpoint. Subsequent cycles rotate the setpoint among the pumps. For example: In cycle 1, pump 1 turns on at 0.4 m. In the next cycle, pump 2 will turn on at 0.4 m.
On setpoint pump 2 (2.5.4.17)	0.3 m*	Sets the level at which pump 2 turns on.

[1)] Sample values denoted by asterisks in illustration on Setting a pump up (reservoir) group (Page 154).

Note

On/Off setpoints per application

The setpoints must be set correctly for the application:

- For a pump up application, *all* of the on setpoints must be less than *all* of the off setpoints.

Set the OFF setpoints

Parameter	Sample value[1)]	Description
Off setpoint pump 1 (2.5.4.14) (Page 254)	1.3 m**	Sets the level at which pump 1 turns off. The first cycle will use this setpoint. Subsequent cycles rotate the setpoint among the pumps. For example: In cycle 1, pump 1 turns off at 1.3 m. In the next cycle, pump 2 will turn off at 1.3 m.
Off setpoint pump 2 (2.5.4.18)	1.2 m**	Sets the level at which pump 2 turns off.

[1)] Sample values denoted by asterisks in illustration on Setting a pump up (reservoir) group (Page 154).

Pump control interlocks

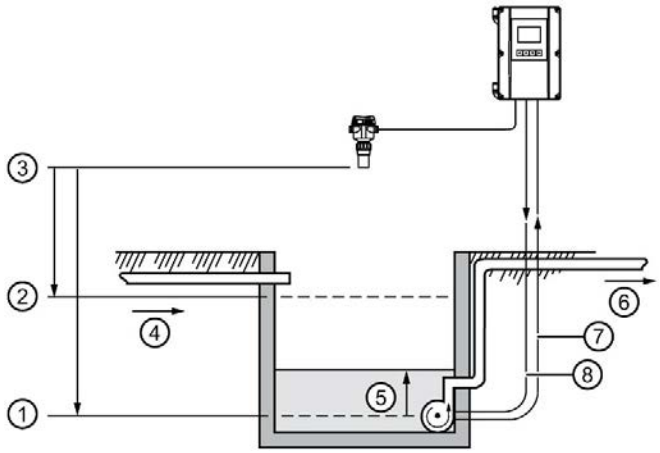

① Lower calibration point
② Upper calibration point
③ Sensor reference point
④ Inflow
⑤ Level
⑥ Outflow
⑦ Digital input
⑧ Relay output

Parameter	Sample value	Description
Mode (2.5.4.1) (Page 251)	Alternate duty assist	Sets the control algorithm used to activate the pump relay.
Interlock pump 1 (2.5.4.17) (Page 255)	Digital input 1	Enables pump start interlock for Pump 1 by assigning Digital input 1.
Interlock pump 2 (2.5.4.21)	Digital input 2	Enables pump start interlock for Pump 2 by assigning Digital input 2.
Polarity (2.4.4.2) (Page 235)	Active high level	Use if necessary to reverse logic for Digital input 1.
Polarity (2.4.5.2)	Active high level	Use if necessary to reverse logic for Digital input 2.

These values will ensure that any pump reporting a failure is removed from the pumping rotation. An interlock (if configured) will prevent the corresponding pump from starting if the interlock input is active. For more information on pump interlocks and digital inputs, see Digital inputs (Page 143).

Other pump controls

Prerequisite: Common parameters must first be set for each pump control below:

Parameter	Sample value
Step: Select application (Page 61)	Level
Response rate (Page 66)	Medium
Sensor type (Page 65)	SITRANS Probe LU240
Length units (Page 64)	m
Lower calibration point (Page 66)	1.8
Upper calibration point (Page 66)	0.4

Rotating pumps by service ratio

Prerequisite: Set pump control mode to a service ratio value [Mode (2.5.4.1) (Page 251) = "Service ratio duty assist" or "Service ratio duty backup"].

Parameter	Sample value	Description
Service ratio pump 1 (2.5.4.15) (Page 254)	1	These values will start Pump 2 fifty percent of the time, and Pumps 1 and 3 each, twenty-five percent of the time.
Service ratio pump 2 (2.5.4.19)	2	
Service ratio pump 3 (2.5.4.25)	1	

Note

- The device will not sacrifice other pumping strategies to ensure that the ratio is held true.
- If the pump ratios are set to the same value, then all pumps are used equally (default).

When a pump start is required (ON setpoint), the pump with the fewest running hours (with respect to the assigned ratio values) starts. Conversely, when a pump stop is required (OFF setpoint), the pump with the most running hours (as compared to the assigned ratio values) stops. (View the run time of the relay assigned per pump: Pump control (3.4.6) (Page 310).)

Totalizing pumped volume

Prerequisite: The volume parameters must be set: a "Volume" application has been configured.

Parameter	Sample value	Description
Vessel shape (2.5.1.1) (Page 248)	Linear vessel	Vessel shape is linear (flat bottom).
Maximum volume (2.5.1.2) (Page 249)	17.6	Maximum volume is 17.6 m^3 or 17,600 liters.
Mode (2.5.4.1) (Page 251)	Alternate duty assist	Sets the control algorithm used to activate the pump relay.
On setpoint pump 1 (2.5.4.13) (Page 254)	1.0 m	Sets the level at which pump 1 turns on. The first cycle will use this setpoint. Subsequent cycles rotate the setpoint among the pumps.
On setpoint pump 2 (2.5.4.17)	1.2 m	Sets the level at which pump 2 turns on.
Off setpoint pump 1 (2.5.4.14) (Page 254)	0.2 m	Sets the level at which pump 1 turns off. The first cycle will use this setpoint. Subsequent cycles rotate the setpoint among the pumps.
Off setpoint pump 2 (2.5.4.18)	0.3 m	Sets the level at which pump 2 turns off.
Inflow/discharge adjustment (2.5.4.5) (Page 252)	Based on rate estimation	The inflow rate measured just prior to the start of the pump cycle is used to estimate the inflow for the duration of the cycle.

Setting a pump to run-on

This functionality is used to reduce sludge and sediment from building up at the bottom of a wet well, thereby reducing maintenance. This is achieved by running the pumps below the normal OFF setpoint and requires a run-on interval and duration to control this event.

Example:

Pump 1 is set to pump for an extra 60 seconds every 5 hours, pump 2 should not run on.

Parameter	Sample value	Description
Pump run-on interval (2.5.4.7) (Page 252)	5	Five hours between pump run-on occurrences.
Run-on duration pump 1 (2.5.4.16) (Page 254)	60	The pump will run on for 60 seconds.
Run-on duration pump 2 (2.5.4.20)	0	Pump 2 will never run on.

Setting the pump start delays

In the event that power to the SITRANS LT500 is lost, the pump start delays ensure that all of the pumps do not start at once to avoid power surges. There are two parameters used here: "Delay between starts" and "Power resumption delay".

Example:

The delay between pump starts is set to 20 seconds and the delay of the first pump is set to 60 seconds.

Parameter	Sample value	Description
Delay between starts (2.5.4.8) (Page 253)	20	Wait at least 20 seconds between pump starts.
Power resumption delay (2.5.4.9) (Page 253)	60	Wait for 60 seconds when power is restored for the first pump to activate.

Reducing wall cling

Use the wall cling reduction function to randomly alter the ON and OFF setpoints over a range. This reduces the ridge of material that builds up at the setpoint that can give false echoes.

This setting may increase the number of days between trips to clean the wet well.

Prerequisite:

A pump application is configured, and ON and OFF setpoints are set per pump.

Example:

A range of 0.5 meters is used to vary the setpoint. The randomly selected setpoints are always inside the ON and OFF setpoints.

Parameter	Sample value	Description
Enable wall cling reduction (2.5.4.3) (Page 252)	Enabled	Enables the function.
Wall cling variation (2.5.4.4) (Page 252)	0.5	The range is set to 0.5 m. The pump ON and OFF setpoints are randomly varied inside this range so the material level does not stop at the same point each time.

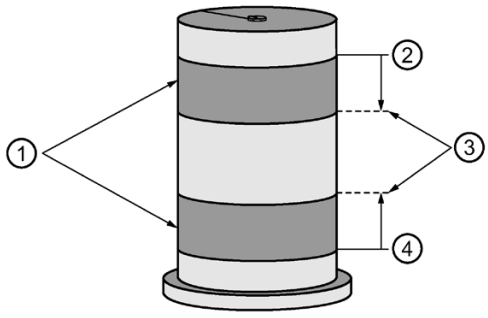

① Random setpoint range
② On setpoint (per pump)
③ Wall cling variation
④ Off setpoint (per pump)

Saving energy

Pumps can use different setpoints at different times of the day to account for variable energy costs.

The following example illustrates high energy cost usage reduction and/or elimination by using the SITRANS LT500 pump energy savings function on a wet well (pump down application). This function uses a start and end time per peak period, and ON and OFF setpoints per pump that are specific to this function.

Prerequisite:

"Pump energy savings" function is enabled.

Example:

15:30 (3:30 pm) 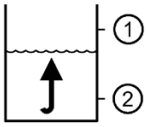	Normal operation Uses the standard ON and OFF setpoints (On setpoint pump 1 (2.5.4.13) (Page 254) and Off setpoint pump 1 (2.5.4.14) (Page 254)). Energy cost is at minimum.
16:30 (4:30 pm) 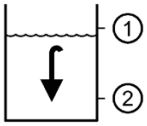	Peak lead time (2.5.5.2) (Page 256) = 1 hour. Pumps down the wet well if the level is within 10% of the ON setpoint for the first pump. This ensures that the wet well starts the high cost period at the Off setpoint pump 1 (2.5.4.14) (Page 254). Energy cost is at minimum.
17:30 (5:30 pm) 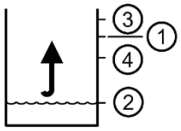	Peak 1 start time (2.5.5.3) (Page 256) = 17:30. Starts using the energy savings setpoints (Peak on setpoint pump 1 (2.5.5.13) (Page 257) and Peak off setpoint pump 1 (2.5.5.14) (Page 257)). Energy cost is at maximum.
21:30 (9:30 pm) 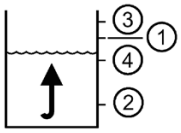 1. 8 m (Normal ON setpoint) 2. 2 m (Normal OFF setpoint) 3. 9 m (Peak ON setpoint) 4. 6 m (Peak OFF setpoint)	Peak 1 end time (2.5.5.4) (Page 256) = 21:30. Returns to normal setpoints (On setpoint pump 1 (2.5.4.13) (Page 254) / Off setpoint pump 1 (2.5.4.14) (Page 254)). Energy cost returns to minimum.

In general, cascade the timing of the pump downs so that the wells farthest from the treatment facility begin first and the entire system pushes material through during the low cost period.

Note

Minimizing cost

When the peak ON setpoint is not reached, no energy is used during the high cost period. If the peak ON setpoint is reached, the wet well is only pumped down to 6 meters, thereby minimizing high cost energy usage.

Parameter	Sample value	Description
Enable (2.5.5.1) (Page 256)	Enabled	Enables pump energy savings function
Peak 1 start time (2.5.5.3) (Page 256)	17:30	Starts the first high cost period at 5:30 pm
Peak 1 end time (2.5.5.4) (Page 256)	21.30	Ends the first high cost period at 9:30 pm
Peak lead time (2.5.5.2) (Page 256)	01:00	Sets the pump down to happen 1 hour before the high cost period
Peak on setpoint pump 1 (2.5.5.13) (Page 257)	9	Sets the high cost ON setpoint at process level of 9 m
Peak off setpoint pump 1 (2.5.5.14) (Page 257)	6	Sets the high cost OFF setpoint at process level of 6 m

Tracking pump usage

Pump control parameters show the amount of time an individual relay (assigned to a pump) has been used. See Runtime relay 1 (3.4.6.1) (Page 310) for each relay (one to six), under Pump control (3.4.6) (Page 310).

Exercising pumps

Use the pump exercise function to run pumps when they are not normally run as part of normal pumping cycles. This function is particularly useful when used with a fixed duty pump control algorithm where certain pumps may not be called into regular service due to their pump-specific ON setpoints that are not normally reached. Pump exercise allows all pumps to be run periodically to avoid pump seizure or reduce inlet clogging.

Pump exercise can be enabled for any pump in an application ("Enable exercise pump x" - disabled by default). When pump exercise is enabled, two further parameters must be configured:

- Exercise interval: sets how often the pump is exercised ("Exercise interval pump x")
- Exercise duration: sets how long the pump is exercised ("Exercise duration pump x")

If the LT500 detects that the last time a pump was used is more than its defined exercise interval then the LT500 will begin a pump exercise cycle for that pump: the pump is turned on for the defined duration.

Pump exercise cycles only occur *between* normal pump cycles. Pumps are never exercised during normal pump cycles, the two are exclusive.

Prerequisites for pump exercise:

- A pump application is configured, and ON and OFF setpoints are set per pump.
- Pump exercise function is enabled.

Related conditions that affect when pump exercise begins

- Pump exercise does not occur during periods of peak energy consumption (when parameter "Pump energy savings" is enabled).
- An optional safe-guard level for pump exercise can be configured for the application. This will prevent any pump in the application from being exercised if the level is below the safe-guard value (for pump down applications) or above it (for pump up applications). The safe-guard is configured for the application (per measurement point), not per pump ("Enable exercise guard", "Exercise guard level").
- Normal pump start delays and power resumption delays will affect when a pump exercise cycle begins.
- If the pump has a start interlock enabled and the input is active then the pump will not be exercised.
- Only one pump per application will be exercised at any given time. If multiple pumps come due for exercising when a normal pump cycle is not occurring then they will each undergo exercising sequentially. For LT500 device dual-point version, two pumps (one on each application) may be exercised at the same time.

If exercise is due and is prevented as a result of any of the conditions above then exercising will be deferred until there are no preventive conditions.

Related conditions that affect when pump exercise ends

A pump exercise cycle normally ends when the exercise duration for the pump has elapsed, at which time the exercise cycle ends (pump turns off). A pump exercise cycle may be interrupted in the following situations:

- If the level in the application calls for a normal pump cycle to begin: normal pump cycles have precedence over exercising cycles,
- If entering the peak lead period (when parameter "Pump energy savings" is enabled) *and* an initial pump down is required,
- If the level crosses the safe-guard level and exercise guard is enabled,
- If the user changes any pump application related parameters (on/off setpoints, mode, etc.).

If a pump exercise cycle is interrupted as a result of one of the above conditions then the exercise cycle is considered complete, regardless of the length of time that the pump ran.

Other effects of pump exercise

- Pump exercise cycles affect the pump runtime: the exercise hours for each pump are added to its total time in operation ("Runtime relay x" under menu "Monitoring>Pump control").
- Pump exercise cycles do not affect the pumped volume for the application.
- Pump run-on does not apply for exercise cycles. If a pump is configured to run-on, it will do so only during a normal pump cycle.

View the last time a pump ran (either in a normal pump cycle or in a pump exercise cycle) in parameter "Last time used relay x", under menu "Monitoring>Pump control".

8.1.7.3 Volume flow

PMD and volume flow calculation

The device provides numerous open channel flow calculation features. The device can be configured to select the flow calculation specific to the primary measuring device (PMD), such as a flume or weir. If the PMD does not match any of the preset PMD calculations, a custom volume flow calculation can be used. (Configure a custom application by setting parameter Primary measuring device (PMD) (2.5.6.1) (Page 258) to "Custom", then define your PMD using Custom flow table 1 to 16 (2.5.7) (Page 265).) For more details, see Volume flow calculation (Page 420).

The device converts the level measurement into a volume flow rate.

Open Channel Monitoring (OCM)

An OCM installation is defined three ways, with each one based on the Primary Measuring Device (PMD) used:

1. **Dimensional**

   For some common weir and flume types. PMD dimensions are entered directly.

   - Rectangular flume BS 3680/ISO 4373 (Page 170)
   - Round nose horizontal crest weir BS 3680/ISO 4373 (Page 171)
   - Trapezoidal flume BS 3680/ISO 4373 (Page 172)
   - U-flume BS 3680/ISO 4373 (Page 173)
   - Finite crest weir BS 3680/ISO 4373 (Page 174)
   - Thin plate rectangular weir BS 3680/ISO 4373 (Page 175)
   - Thin plate V-notch weir BS 3680/ISO 4373 (Page 176)
   - Rectangular weir contracted (Page 177)
   - Round pipe flume (Page 178)
   - Palmer-Bowlus flume (Page 179)
   - H-flume (Page 180)

2. **Exponential**

   For most other weir and flume types. PMD exponents provided by the manufacturer are entered. Flow is calculated using the exponent [Flow exponent (2.5.6.3) (Page 260)] and the maximum values [Maximum head (2.5.6.4) (Page 260) and Maximum flow (2.5.6.6) (Page 261)].

   - PMDs with exponential flow to head function (Page 165)
   - Parshall flume (Page 167)
   - Leopold-Lagco flume (Page 168)
   - Cut throat flume (Page 168)
   - Khafagi-Venturi flume (Page 169)

3. **Custom**

   For all other PMDs, the head-to-flow curve can be plotted based on known breakpoints, usually supplied by the PMD manufacturer.

   - Volume flow calculation (Page 420)
   - Example flumes (Page 421)
   - Example weirs (Page 422)

Methods to calculate volume flow

When using the device in a volume flow application, a method of flow calculation must be selected. There are two possible methods for calculating volume flow with the device: absolute or ratiometric, and different information must be entered for the device to carry out the calculation. For more details and an example, refer to Method of flow calculation (Page 422).

Setting zero head

Many PMDs start flowing at a level higher than the zero head of the application. If applicable to the application, account for the volume flow as follows:

Use parameter Far range (2.1.6.10) (Page 199) (set outside of the commissioning wizard) where the empty level is set to the bottom of the weir and above the bottom of the channel. It should be used if the surface monitored can fall past the lower calibration point in normal operation without reporting a loss of echo. Set the value for parameter "Far range" to the lower calibration point plus the amount by which the surface monitored exceeds the lower calibration point. The value for parameter "Far range" can be greater than the range of the transmitter.

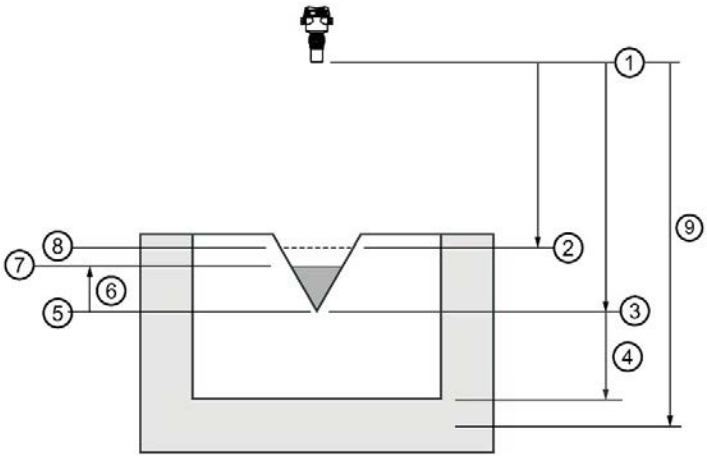

① Sensor reference point
② Upper calibration point
③ Lower calibration point
④ Zero head offset
⑤ Zero head
⑥ Head
⑦ Material surface
⑧ Maximum head/Maximum flow
⑨ Far range

Common parameters

These parameters are required for all "Volume flow" applications.

Wizard step	Parameter
Units	Length units
	Volume units
	Volume flow units
Sensor type	Sensor type
Calibration	Current at lower calibration point (for generic sensor)
	Current at upper calibration point (for generic sensor)
	Lower calibration point
	Upper calibration point
	Response rate (available via wizard only)
	Material type (for supported remote sensors)
Primary measuring device	Primary measuring device
Method of flow calculation	Method of flow calculation
Flow settings	Maximum head
	Zero head offset [1)]
	Maximum flow (for ratiometric calculation)
	Low flow cut-off

[1)] Typically set to the same value as the hump height in a flume, or the crest height in a weir.

PMDs with exponential flow to head function

Additional parameters (beyond common parameters listed previously) are required for Primary Measuring Devices (PMDs) that measure flow by an exponential equation. Ensure the correct flow exponent per PMD is used. Consult manufacturer's documentation for correct flow exponent.

Standard weirs

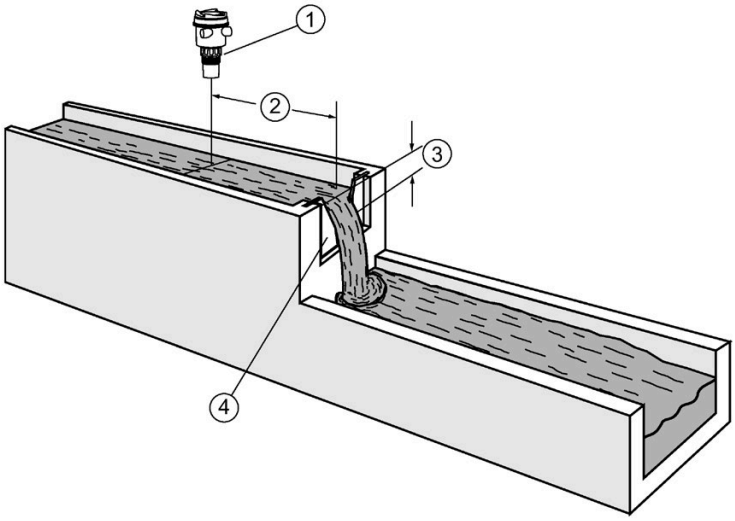

① Sensor
② 3 to 4 x $height_{max}$
③ Height
④ Weir profile

Applicable weir profiles

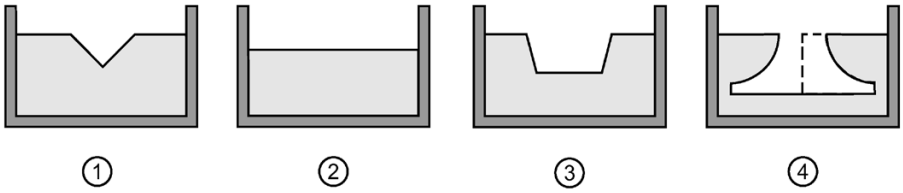

① V-notch or triangular
② Suppressed rectangular
③ Cipolleti or trapezoidal
④ Sutro or proportional

Setup of exponential devices

Set the common parameters (Page 165).

Set additional parameters:

Primary measuring device = Exponential devices	
	Flow exponent (2.5.6.3) (Page 260) [1]
	K-factor (2.5.6.11) (Page 262) [2]

[1] Consult weir manufacturer's documentation for correct flow exponent.

[2] Required for exponential device when absolute calculation used.

Parshall flume

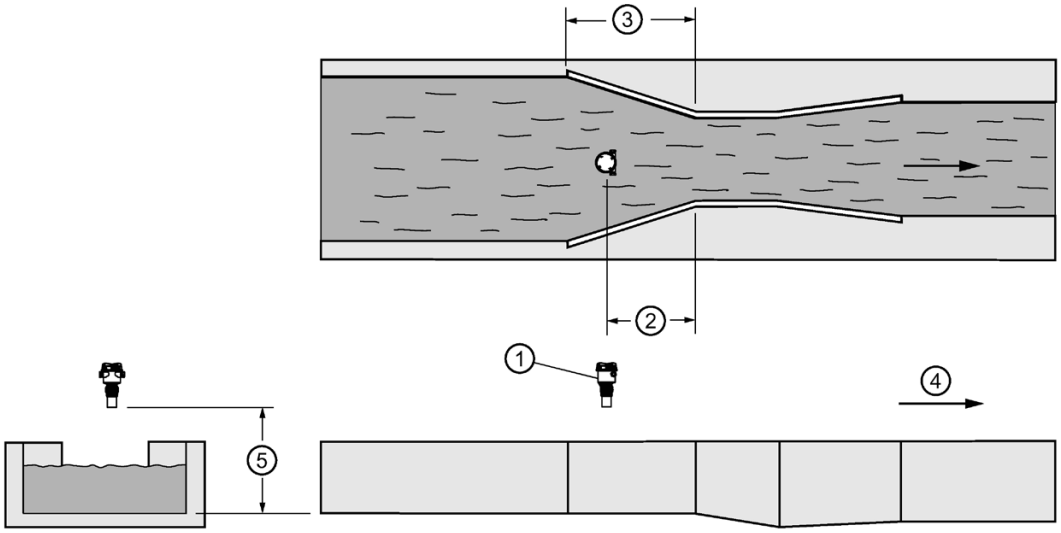

① Sensor[1)]
② 2/3 of converging dimension
③ Converging dimension
④ Direction of flow
⑤ Zero head

[1)] The sensor must be above the maximum head by at least the blanking value (Near range (2.1.6.9) (Page 198)).

Application information

- Sized by throat width
- Set on solid foundation
- For rated flows under free flow conditions, the level is measured at 2/3 the length of the converging section from the beginning of the throat section

Leopold-Lagco flume

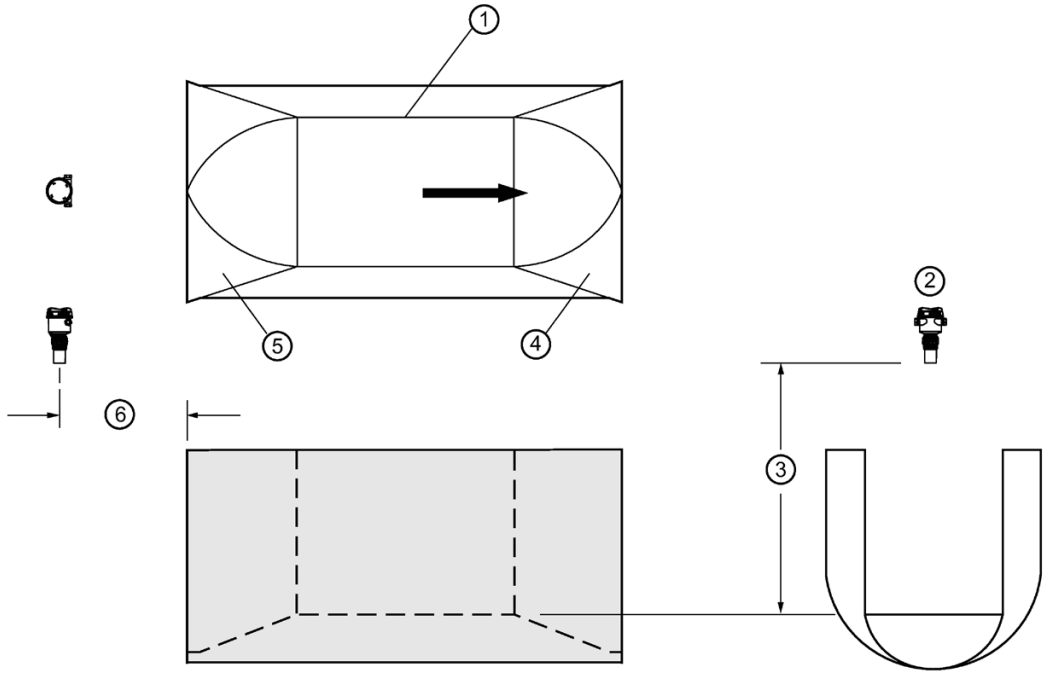

①	Throat	④	Diverging
②	Sensor[1)]	⑤	Converging
③	Zero head	⑥	Point of measurement

[1)] The sensor must be above the maximum head by at least the blanking value (Near range (2.1.6.9) (Page 198)).

Cut throat flume

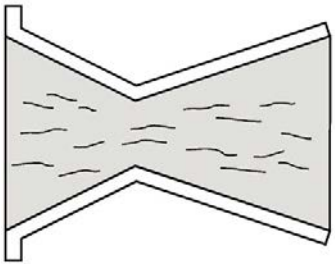

Application information

- Similar to Parshall flume except that the floor is flat bottomed and throat has no virtual length.
- Refer to manufacturer's specifications for flow equation and point of level measurement.

Khafagi-Venturi flume

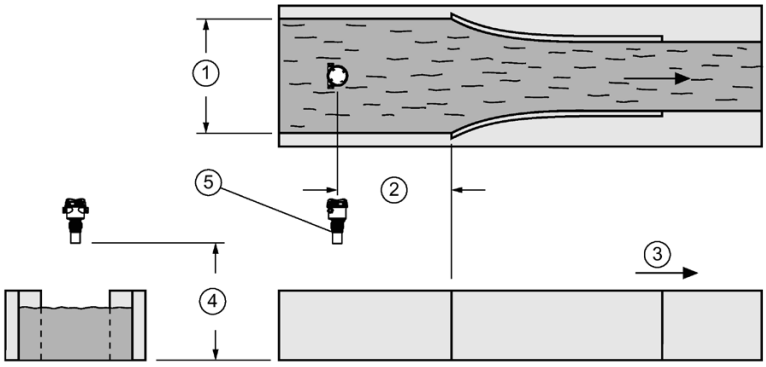

① Channel width
② 1 x channel width
③ Direction of flow
④ Zero level
⑤ Sensor[1)]

[1)] The sensor must be above the maximum head by at least the blanking value (Near range (2.1.6.9) (Page 198)).

Supported dimensional PMDs and setup

Rectangular flume BS 3680/ISO 4373

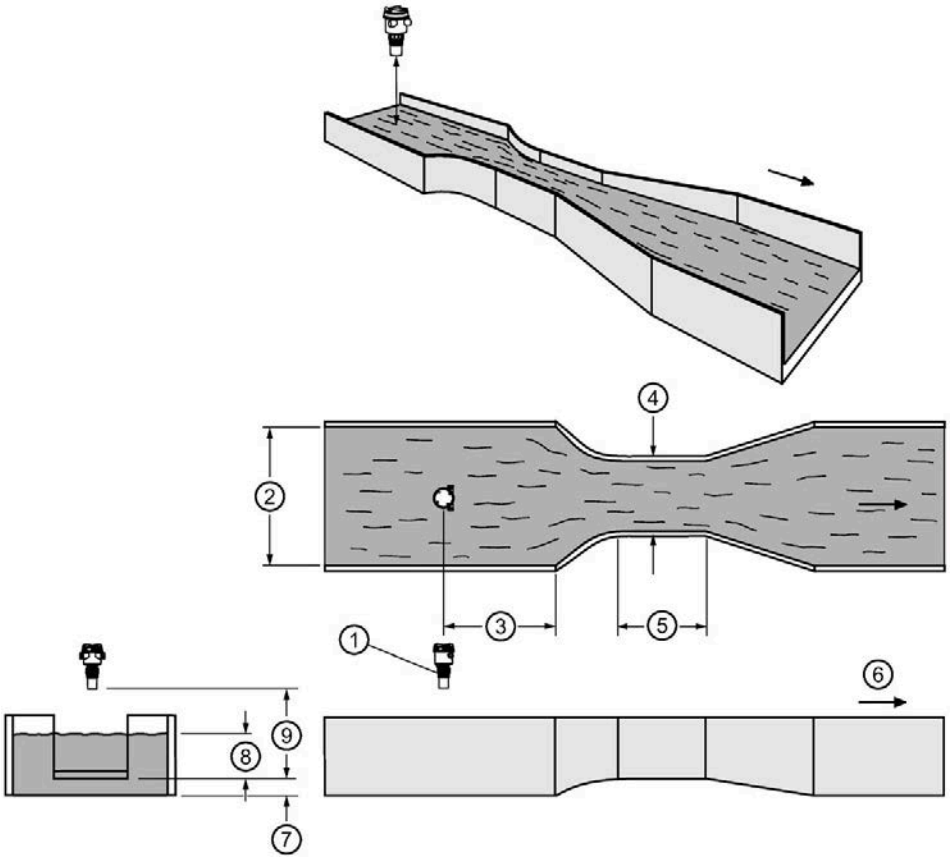

① Sensor[1)]
② Approach width
③ 3 to 4 x height$_{max}$
④ Throat width
⑤ Throat length
⑥ Direction of flow
⑦ Hump height
⑧ Head
⑨ Zero head

[1)] The sensor must be above the maximum head by at least the blanking value (Near range (2.1.6.9) (Page 198)).

Setup

Set the common parameters (Page 165).

Set additional parameters:

Primary measuring device = Rectangular flume BS 3680/ISO 4373	
	Approach width (2.5.6.15) (Page 263)
	Throat width (2.5.6.16) (Page 264)
	Hump height (2.5.6.17) (Page 265)
	Throat length (2.5.6.18) (Page 265)

Round nose horizontal crest weir BS 3680/ISO 4373

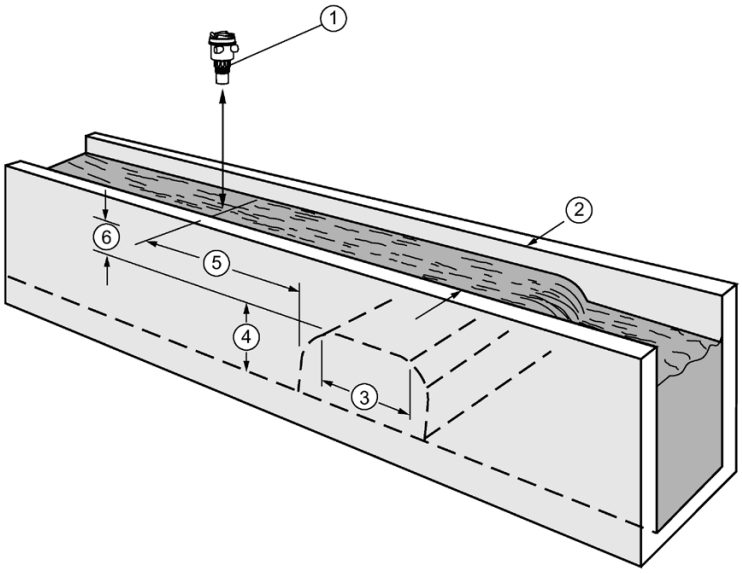

① Sensor[1)]
② Crest width
③ Crest length
④ Crest height
⑤ 3 to 4 x height$_{max}$
⑥ Head

[1)] The sensor must be above the maximum head by at least the blanking value (Near range (2.1.6.9) (Page 198)).

Setup

Set the common parameters (Page 165).

Set additional parameters:

Primary measuring device = Round nose horizontal crest weir BS 3680/ISO 4373	
	Crest width (2.5.6.15) (Page 263)
	Crest height (2.5.6.16) (Page 264)
	Crest length (2.5.6.17) (Page 265)

Trapezoidal flume BS 3680/ISO 4373

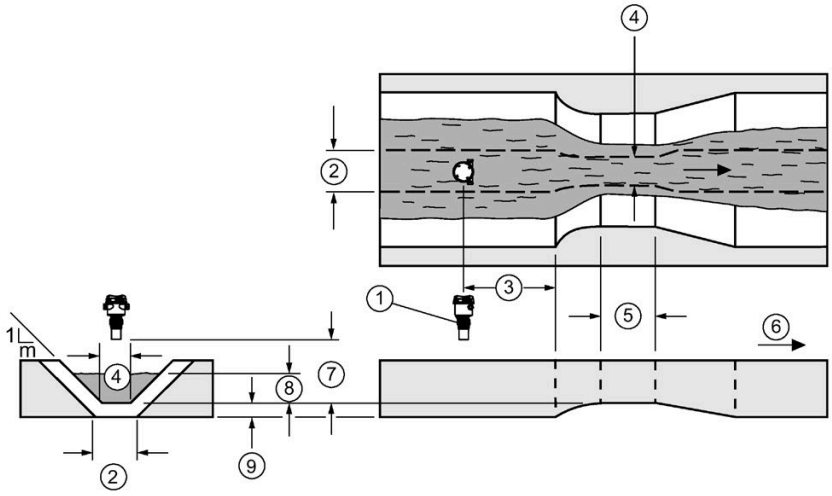

① Sensor[1)]
② Approach width
③ 3 to 4 x height$_{max}$
④ Throat width
⑤ Throat length
⑥ Direction of flow
⑦ Zero head
⑧ Head (height of material)
⑨ Hump height

1) The sensor must be above the maximum head by at least the blanking value (Near range (2.1.6.9) (Page 198)).

Setup

Set the common parameters (Page 165).

Set additional parameters:

Primary measuring device = Trapezoidal flume BS 3680/ISO 4373	
	Slope (2.5.6.13) (Page 262)
	Approach width (2.5.6.15) (Page 263)
	Throat width (2.5.6.16) (Page 264)
	Hump height (2.5.6.17) (Page 265)
	Throat length (2.5.6.18) (Page 265)

U-flume BS 3680/ISO 4373

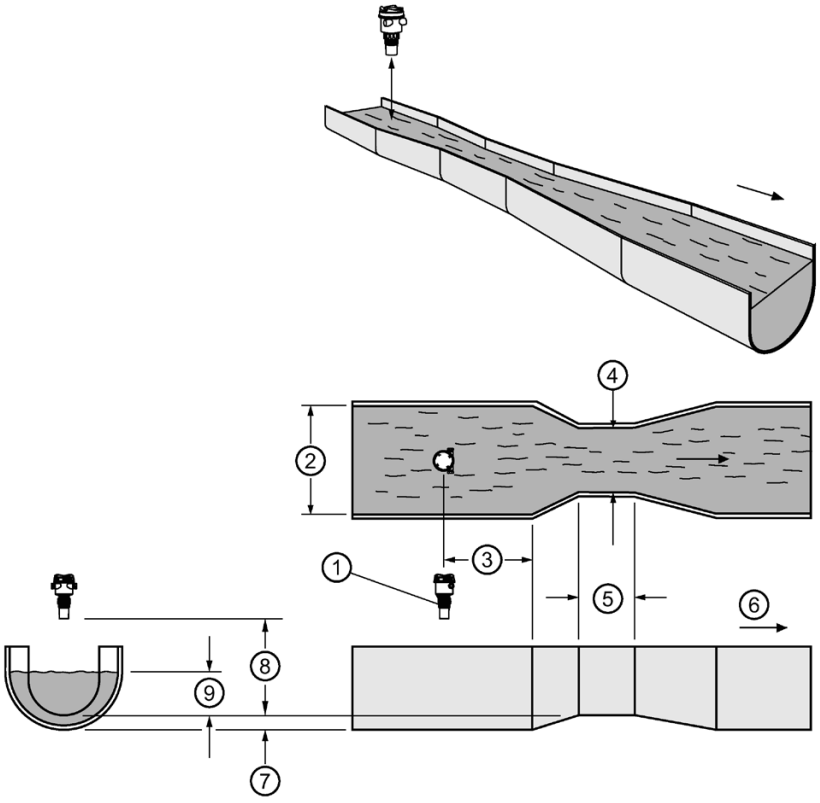

① Sensor[1)]
② Approach diameter
③ 3 to 4 x height$_{max}$
④ Throat diameter
⑤ Throat length
⑥ Direction of flow
⑦ Hump height
⑧ Zero head
⑨ Head

[1)] The sensor must be above the maximum head by at least the blanking value (Near range (2.1.6.9) (Page 198)).

Setup

Set the common parameters (Page 165).

Set additional parameters:

Primary measuring device = U-flume BS 3680/ISO 4373	
	Approach diameter (2.5.6.15) (Page 263)
	Throat diameter (2.5.6.16) (Page 264)
	Hump height (2.5.6.17) (Page 265)
	Throat length (2.5.6.18) (Page 265)

Finite crest weir BS 3680/ISO 4373

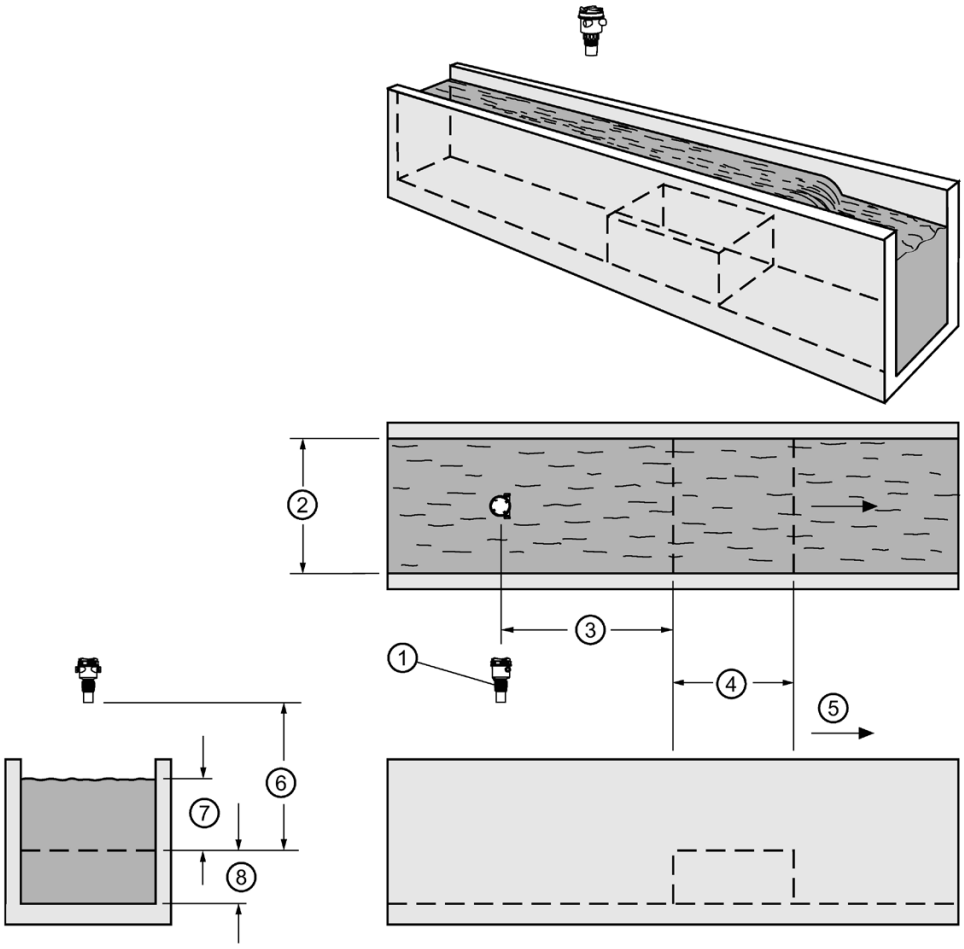

① Sensor[1)]
② Crest width
③ 3 to 4 x height$_{max}$
④ Crest length
⑤ Direction of flow
⑥ Zero head
⑦ Head
⑧ Crest height

[1)] The sensor must be above the maximum head by at least the blanking value (Near range (2.1.6.9) (Page 198)).

Setup

Set the common parameters (Page 165).

Set additional parameters:

Primary measuring device = Finite crest weir BS 3680/ISO 4373	
	Crest width (2.5.6.15) (Page 263)
	Crest height (2.5.6.16) (Page 264)
	Crest length (2.5.6.17) (Page 265)

Thin plate rectangular weir BS 3680/ISO 4373

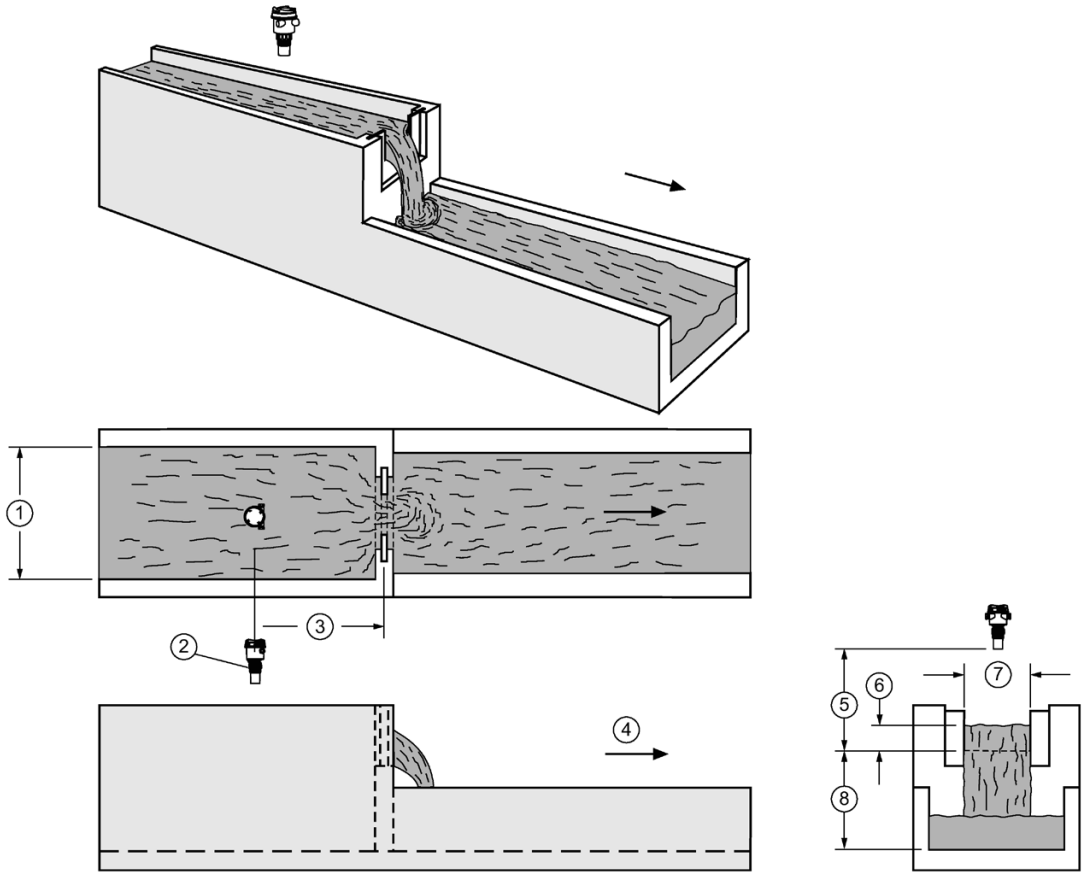

① Approach width
② Sensor[1)]
③ 4 to 5 x height$_{max}$
④ Direction of flow
⑤ Zero head
⑥ Head
⑦ Crest width
⑧ Crest height

[1)] The sensor must be above the maximum head by at least the blanking value (Near range (2.1.6.9) (Page 198)).

Setup

Set the common parameters (Page 165).

Set additional parameters:

Primary measuring device = Thin plate rectangular weir BS 3680/ISO 4373	
	Approach width (2.5.6.15) (Page 263)
	Crest width (2.5.6.16) (Page 264)
	Crest height (2.5.6.17) (Page 265)

Thin plate V-notch weir BS 3680/ISO 4373

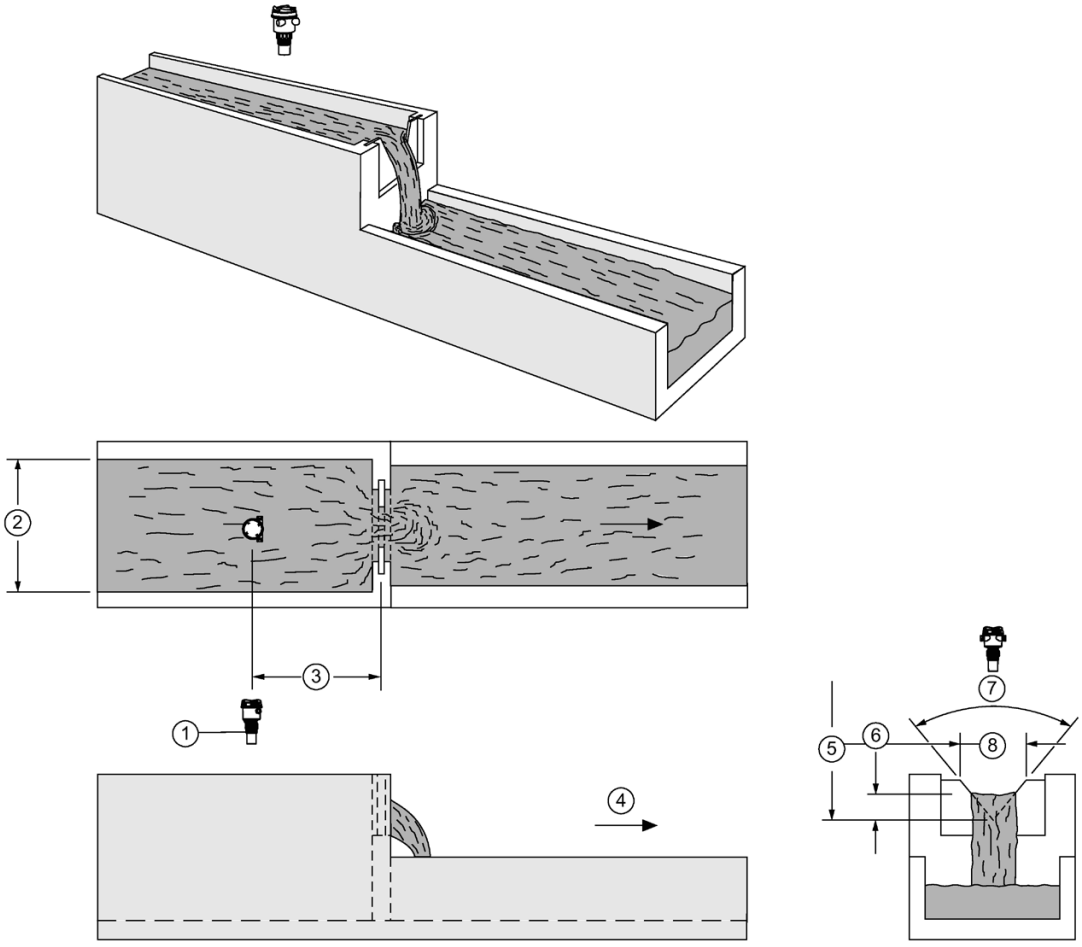

① Sensor[1)]
② Approach width
③ 4 to 5 x height$_{max}$
④ Direction of flow
⑤ Zero head
⑥ Head
⑦ V-notch angle
⑧ Crest width

[1)] The sensor must be above the maximum head by at least the blanking value (Near range (2.1.6.9) (Page 198)).

Setup

Set the common parameters (Page 165).

Set additional parameters:

Primary measuring device = Thin plate V-notch weir BS 3680/ISO 4373	
	V-notch angle (2.5.6.12) (Page 262)

Rectangular weir contracted

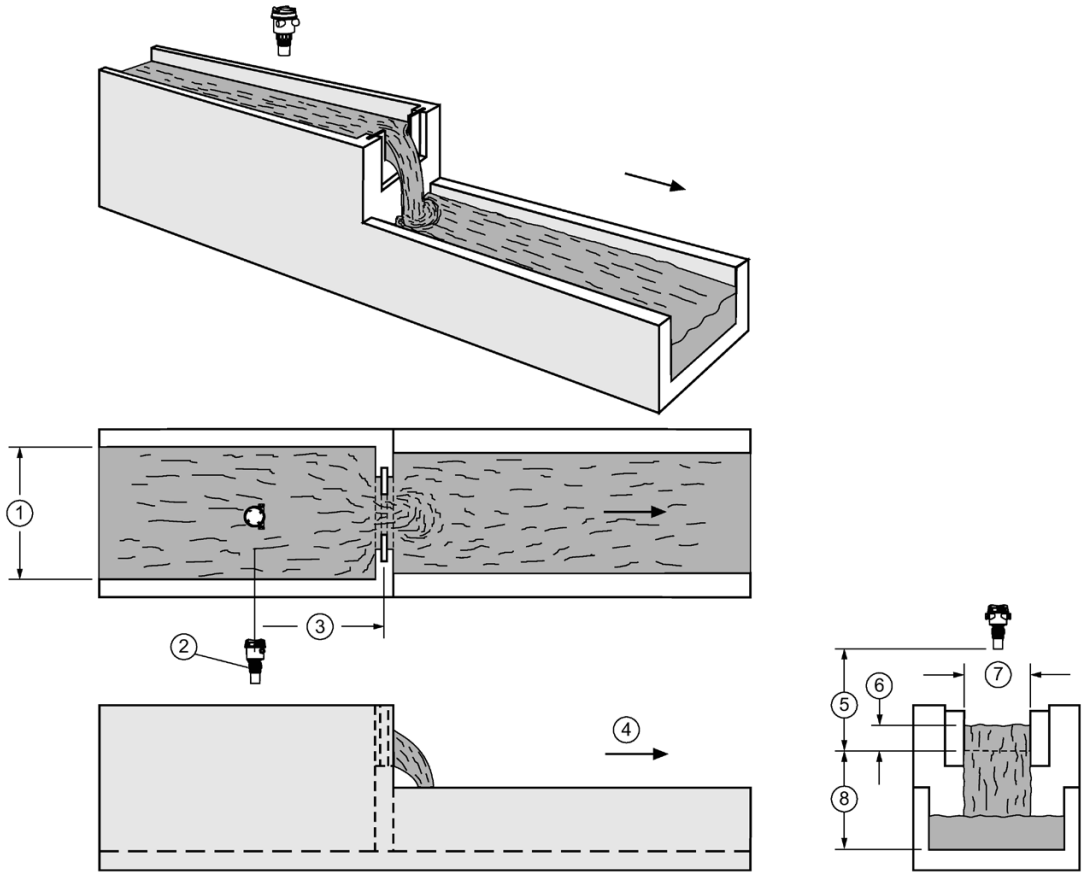

①	Approach width	⑤	Zero head
②	Sensor[1)]	⑥	Head
③	4 to 5 x height$_{max}$	⑦	Crest width
④	Direction of flow	⑧	Crest height

[1)] The sensor must be above the maximum head by at least the blanking value (Near range (2.1.6.9) (Page 198)).

Setup

Set the common parameters (Page 165).

Set additional parameters:

Primary measuring device = Rectangular weir contracted	
	Crest width (2.5.6.15) (Page 263)

Round pipe flume

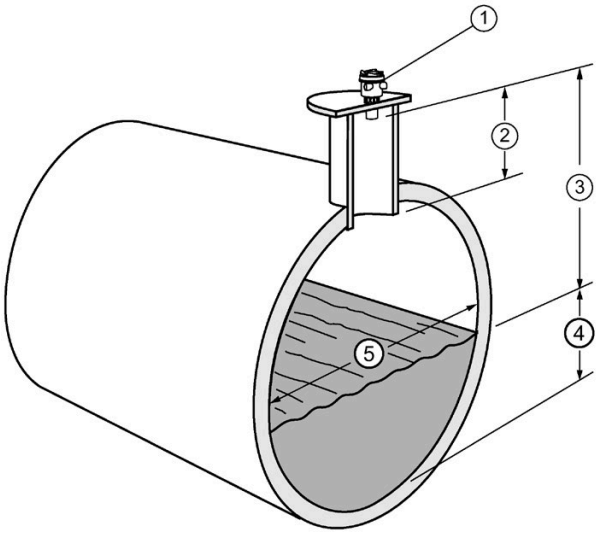

① Sensor
② This dimension should be at least 15 cm (6") shorter than the blanking value
(see Near range (2.1.6.9) (Page 198))
③ The sensor must be above the maximum head by at least the blanking value.
④ Head
⑤ Pipe diameter

Setup

Set the common parameters (Page 165).

Set additional parameters:

Primary measuring device = Round pipe	
	Slope (2.5.6.13) (Page 262)
	Roughness coefficient (2.5.6.14) (Page 262)
	Pipe diameter (2.5.6.15) (Page 263)

Palmer-Bowlus flume

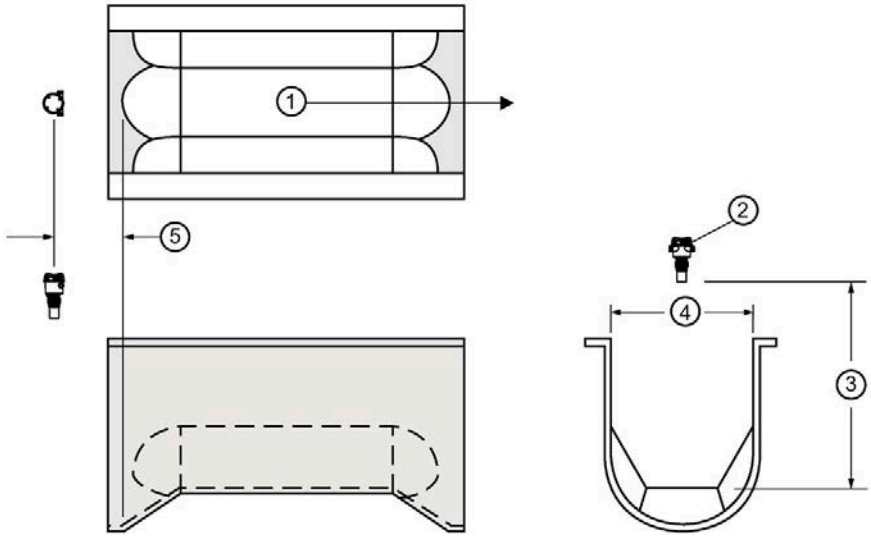

① Direction of flow
② Sensor[1)]
③ Zero head
④ Pipe diameter
⑤ (Pipe diameter)/2, point of measurement[2)]

[1)] The sensor must be above the maximum head by at least the blanking value (Near range (2.1.6.9) (Page 198)).

[2)] For rated flows under free flow conditions

Setup

Set the common parameters (Page 165).

Note

Method of flow calculation

The Palmer-Bowlus flume can only be set up using ratiometric calculations.

Set additional parameters:

Primary measuring device = Palmer-Bowlus flume	
	Maximum flume width (2.5.6.15) (Page 263) h_{max}

Application information

- Sized by pipe diameter
- Flume relief is trapezoidal
- Designed to install directly into pipelines and manholes
- Level is referenced to bottom of the throat, not bottom of the pipe
- For rated flows under free flow conditions, the level is measured at a distance equal to (Pipe diameter)/2 upstream from the beginning of the converging section.

H-flume

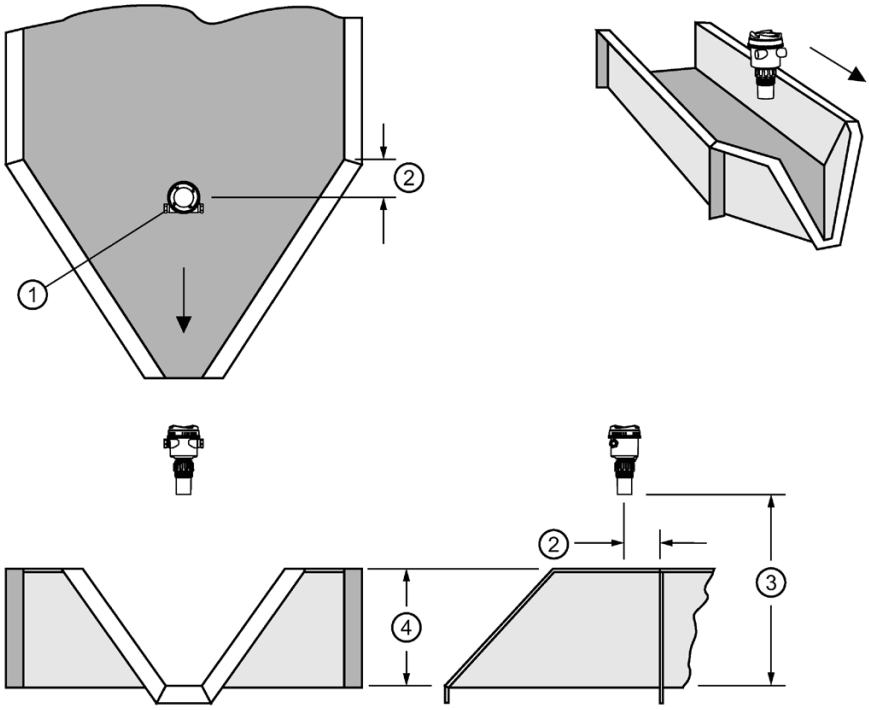

① Sensor[1)]
② Point of measurement
③ Zero head
④ Flume height

[1)] The sensor must be above the maximum head by at least the blanking value (Near range (2.1.6.9) (Page 198)).

Setup

Set the common parameters (Page 165).

Note

Method of flow calculation

H-flume can only be set up using ratiometric calculations.

Set additional parameters:

Primary measuring device = H-flume	
	Flume height (2.5.6.15) (Page 263)

Application information

- Sized by maximum depth of flume
- Approach is preferably rectangular, matching width and depth for distance 3 to 5 times the depth of the flume.

- For rated flows under free flow conditions, the level is measured at a point downstream from the flume entrance.

Flume size	Point of measurement	
Diameter in feet	**cm**	**inches**
0.5	5	1.75
0.75	7	2.75
1.0	9	3.75
1.5	14	5.5
2.0	18	7.25
2.5	23	9
3.0	28	10.75
4.5	41	16.25

- H-flumes come with a flat or sloping floor. The same flow table can be used because error is less than 1%.

8.1.7.4 Time to spill

Time to spill is a feature that calculates the time until the application level will reach a pre-determined "spill level" based on the current level and its rate of change. Time to spill is calculated independently for each level measurement point. When the calculated time to spill is less than the configured time threshold a spill diagnostic is triggered.

Parameter	Sample value	Description
Time to spill threshold (2.5.9.1) (Page 266)	10 min	Used to activate a diagnostic when the calculated time to spill is less than this value. A setting of zero disables the diagnostic.
Level to spill (2.5.9.2) (Page 266)	6 m	Sets the spill level for the application.
Level threshold (2.5.9.3) (Page 267)	4.5 m	Sets the level below which a time to spill is ignored.

Configure this feature per measurement point. For point 1, see Time to spill (2.5.9) (Page 266). To monitor the calculated time to spill, see Minutes to spill (3.4.1.4) (Page 306).

8.1.7.5 Time of day relay

A relay can be controlled by time setpoints using time of day.

Parameter	Sample value	Description
Assigned relay (2.5.10.1) (Page 267)	Relay output 1	Sets the relay assigned to this control
Activation time (2.5.10.2) (Page 267)	14:00	Activates the relay at 2:00 pm
Duration (2.5.10.3) (Page 267)	60.0	Activates the relay for 60 seconds

8.1.7.6 Basic control

SITRANS LT500 has basic control functionality to manage any relay-driven part of the process. To set up basic control for simple applications, use the wizard Basic control (Page 89) in Local commissioning.

Relays are managed by the Basic control feature using on and off setpoints, per the example below.

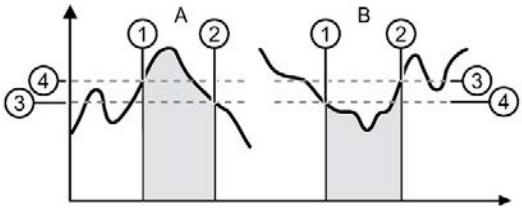

A Positive level application
① Point at which level reaches the on setpoint value, and relay is energized
② Point at which level reaches the off setpoint value, and relay is de-energized
③ Off setpoint value
④ On setpoint value
B Negative level application
① Point at which level reaches the on setpoint value, and relay is energized
② Point at which level reaches the off setpoint value, and relay is de-energized
③ Off setpoint value
④ On setpoint value

To configure Basic control beyond the wizard setup, see menu Basic control (2.5.11) (Page 268).

8.1.7.7 Alarms

SITRANS LT500 has a function to easily manage alarms based on process values and sensor diagnostics. To set up alarms for simple applications, use the wizard Alarms (Page 92) in Local commissioning.

8.1.8 Memory card

The memory card that comes installed in this device is a high-performance micro SD card (8 GB capacity) with the ability to be updated by inserting it in a PC, or by connecting a USB cable to the service port. It is supplied with each device, with a manual and a factory default restore point (which is a human readable parameter listing).

See menu Memory card (3.7) (Page 312) to confirm if card is installed, manage the MSD function, and monitor free space on the card.

The card is used to store change logs for parameters and firmware, and an alarm history log. These three logs constitute audit trail logging. For more information see Audit trail (Page 190).

The card is also used to store parameter backup files (restore points), and data logging of process values and parameters.

For detailed information on the layout of each log type, see Files stored on memory card (Page 426).

Note

Changes not stored when MSD option enabled

When MSD is enabled and the device is connected to a PC, changes will not be stored in the backup files on the memory card.

- MSD is enabled by default, so it should be disabled immediately when connecting USB cable to service port. Parameter changes, data logging, and creation of restore points can then be performed, and will be stored to the memory card.
- Only enable MSD when it is required to copy files between the memory card and a PC via the connected USB cable, and immediately disable MSD when copy is complete.

See parameters under Mass storage device (MSD) (3.7.2) (Page 312).

8.1.8.1 Copy configuration

The memory card supports copy and transfer of user settings from one device to another to simplify commissioning. Only setup parameters are copied; no data are changed in the receiving device.

An application setup can be copied from one device to another, using parameters in menu Restore setup (3.12) (Page 329).

Note

Maintain security of restore point files

When restore point files are created, they are stored on the memory card, and are human-readable.

- Treat files as confidential: Content includes all user device settings and access information to the remote sensors.
- Protect files from modification.

CAUTION

Avoid losing settings on a preconfigured sensor

If you wish to connect a preconfigured sensor, ensure parameter Preconfigured (2.1.17) (Page 204) is set to "Yes" on the *second* device, *after* the restore is performed. and *before* connecting the sensor.

Procedure

1. Create a restore point using parameter Create restore point (3.12.1) (Page 330).
   - Name the file and select "Ok".
2. Remove the memory card from the current device.
3. Insert the memory card into the second device (to which the configuration will be copied).
4. Powerup the second device.
5. Perform a restore using parameter Restore (3.12.2) (Page 330).
   - Select the file created in step 1, then select "Ok".

   If a restore point was not created in step 1, the auto-saved configuration file can be used in its place.

8.1.8.2 Data logging

Data logging of process values can be configured under Data logging (3.7.5) (Page 313).

Enable the function, set the mode and interval, and select process values to be logged. Advanced logging of parameters is also available with "Expert" access level login.

Values with timestamp information are stored on the memory card.

The memory card is also used to store other types of log files. For more information, see Audit trail logging (Page 190).

8.1.9 Simulation

SITRANS LT500 supports simulation from the HMI. Level, totalizer, inputs and outputs, and alarms and diagnostics can be simulated separately, or concurrently.

Level simulation

In level simulation, the HMI reacts to the simulated level changes, and activates relays based on the setpoints programmed. The material level can be set to continuously sweep through the measurement range, from the lower calibration point to the upper calibration point and back again (parameter "Simulation mode" set to "Ramp", with a ramp "Rate" configured), or the material level can be held at a specific value (parameter "Simulation mode" set to "Fixed").

Inputs and outputs simulation

When digital inputs or relay outputs are simulated, the corresponding icon on the HMI will show the simulated states. Any configuration that uses the relay outputs or digital inputs (such as "Sensor override" function), will use the simulated values.

In simulation mode, some configured functionality on the device will respond to the simulated value, including:

- **Readings that are based on Level** - The LT500 supports simulation of Level values only. Other simulated values cannot be entered, however, these values will be calculated correctly when Level is simulated. Space, Distance, Volume, Volume flow, and Head will be calculated.
- **Loop current** - The loop current will also track the corresponding reading (Level, Space, Distance, Volume, Volume flow, or Head depending on which of these it is configured to track - setting for "Process value" per current output channel).
- **Alarms and diagnostics** - Any alarms and diagnostics that have been configured, including any relays configured for alarms and diagnostics, will activate based on the simulated value.
- **Relays configured for pumps** - If the device is configured for a pump application, the corresponding relay indicators on the HMI will show active when pumps activate as part of simulation. Relay contacts themselves will activate in simulation mode.
- **Totalizing of OCM volume flow** - Totalizing of volume flow (OCM applications) will occur during simulation of the process value. Totalizers configured for volume flow will increase in value during simulation.
- **Totalizing of pumped volume** - Totalizing of pumped volume will occur during simulation for totalizers configured for pumped volume. The material pumped will be totalized.
- **External totalizers and flow samplers** - As relays activate during simulation external totalizing and flow sampling will occur during simulation. For further details see (External totalizers and flow samplers (Page 140)).
- **Logging** - Log files will reflect the simulated values. This includes logging simulated high-flow/low-flow conditions, and any diagnostics.

The following functions will not respond to the simulated value when in simulation mode:

- **Sensor override** - If a sensor override is configured and the override value lies within the simulated Level range, it will not be simulated. To simulate a sensor override, simulate the digital input configured for the override. See Simulation process (Page 187) for further details on simulating inputs and outputs.

8.1.9.1 Pump relay behavior during simulation

When relay output is simulated, such as relays with pumps assigned to them, the pumps will behave normally, as if not in simulation.

During simulation, the relay icons on the local display will activate, and the relays will energize.

WARNING

Pump relays active during simulation

If there is a possibility of the pumps being damaged during simulation, locally disable them through some other means before enabling simulation.

Note

Pump relay runtime and pump start delay during simulation

- As the pump relays are configured to physically activate in simulation mode, any time activated will be recorded in the "Pump control" (menu 3.4.4) runtime relay parameters (see Runtime relay 1 (3.4.6.1) (Page 310)).
- If a pump start delay has been programmed for the device (Delay between starts (2.5.4.8) (Page 253)), it will be respected in simulation mode.

8.1.9.2 Fail-safe and simulation

LT500 does not always react to an actual fail-safe state when in simulation. Entering a fail-safe state during simulation is dependent on the output being simulated.

Current outputs

The fail-safe activation condition can differ for current outputs, and the setting for this parameter determines whether LT500 will enter a fail-safe state during simulation.

- If parameter "Fail-safe behavior activation condition" is set to "Failure", the current output goes to fail-safe if a fault condition results in a maintenance alarm.
- If parameter "Fail-safe behavior activation condition" is set to "Selected process value faulty", the current output does not go to fail-safe when a process value is simulated.

Device totalizers, external totalizers and samplers

A fail-safe state for these outputs can only be activated based on a faulty process value. Thus, totalizers do not go to fail-safe when a process value is simulated or when a totalizer is simulated (even when a maintenance alarm occurs).

Relays programmed for application, status signals, or alarms and diagnostics

A fail-safe state for such relays is activated based on specific sensor diagnostics. Such relays go to fail-safe when these diagnostics are simulated.

Note

Bench simulation

When fail-safe will not be reported during simulation, a bench simulation of the LT500 can be run without a sensor connected.

8.1.9.3 Communication status

When using communication, the level value and the readings derived from level will display simulated values when any simulation is enabled from the device HMI. Device status conditions within each communication tool will also indicate that the device is in simulation mode.

8.1.9.4 Simulation process

Simulation is an iterative process whereby parameters are adjusted and corresponding results are viewed in operation view. Level, totalizer, inputs and outputs, and alarms and diagnostics can be simulated separately, or concurrently. When simulation is enabled, the local display shows "Function check" in the text area for status messages (see Display views (Page 105)).

Note

Simulation status priority

"Function check" status will appear on the local display during simulation, even if other faults are present.

As per normal operation, the highest priority status will appear on the local display (even during simulation).

CAUTION

Exception when simulating "Alarms and diagnostics"

When alarms and diagnostics are simulated:

- The simulation overrides device control, and
- the "Function check" symbol does not appear on the device display,

as is the case for any other type of simulation.

Use parameter "Simulation mode" to start the simulation

In general, to run a simulation:

- First, set the "Simulation value" to be simulated for a level, totalizer, input, output or alarms and diagnostics simulation.
- Next, enable the simulation.

(When simulating totalizers, alarms and diagnostics, the simulation must be enabled before parameter "Simulation value" is visible.)

To enable a simulation, set parameter "Simulation mode" (under each simulation group below) either to "Enabled" or to a value other than "Disabled".

- Process values (3.8.1) - Level point 1 and 2
- Totalizers (3.8.2) -Totalizers 1 to 4
- Inputs and outputs (3.8.3) - Current outputs HART, 1 and 2, Digital inputs 1 and 2, and Relay outputs 1 to 6

  (Remember that other devices connected to inputs and outputs, such as pumps, are active during simulation.)
- Alarms and diagnostics (3.8.4)

To stop simulation at any time, set parameter "Simulation mode" for the function being simulated to "Disabled". Once disabled, simulation status "Function check" will be cleared from the display.

Note

Ensure proper counting output

After running totalizers during a simulation, the totalizers should be reset to ensure proper counting output. See Reset (2.3.1.9) (Page 224) under respective totalizer menu.

Simulating a Level process value

Procedure

Simulating a fixed level

1. Set the desired fixed level value in parameter Simulation value (3.8.1.1.2) (Page 316) (for measurement point 1).
2. Set parameter Simulation mode (3.8.1.1.1) (Page 316) to "Fixed". (This will enable the simulation, i.e. start the fixed level simulation.)
3. Set parameter Simulation mode (3.8.1.1.1) (Page 316) to "Disabled" to stop the level simulation.

Procedure

Simulating a changing level

1. Set the desired starting level value for a ramped simulation in parameter Simulation value (3.8.1.1.2) (Page 316) (for measurement point 1).
2. Set the desired rate of changing level in parameter Rate (3.8.1.1.3) (Page 316) .
3. Set parameter Simulation mode (3.8.1.1.1) (Page 316) to "Ramp". (This will enable the simulation, i.e. start the ramp simulation.)

   The simulated level will initially begin ramping up from Simulation value (3.8.1.1.2) (Page 316) (increasing level). When the level rises to 100% or falls to 0%, it reverses direction at the same rate.
4. Set parameter Simulation mode (3.8.1.1.1) (Page 316) to "Disabled" to stop the level simulation.

Simulating alarms and diagnostics

In general, to simulate diagnostics:

- First, set the desired mode for an alarms and diagnostics simulation in parameter Simulation mode (3.8.4.1) (Page 320).
  - If setting "Status signals" is selected, set the desired status signal to simulate in parameter Status signals (3.8.4.2) (Page 321). The status signals available for simulation are based on the setting in parameter Status signal mode (3.2.6) (Page 293).
  - If setting "Alarms and diagnostics" is selected, see note below:

Note

Alarms and diagnostics to be simulated must first be enabled

Before a specific alarm/diagnostic can be simulated, it must be enabled in its respective menu.

For example:

- To simulate diagnostic "Sensor not found" on measurement point 1, first enable it in parameter "Enable diagnostics" (2.1.16.).
- To simulate alarm "Level (point 1) above alarm limit", first enable it in parameter "Enable alarms" (2.2.1.3.).

- Next, set the desired alarms/diagnostics to simulate for each:
  - Sensor (3.8.4.3) (Page 322)
  - Process alarms (3.8.4.4) (Page 323)
  - Totalizer alarms (3.8.4.5) (Page 326)
  - Inputs and outputs (3.8.4.6) (Page 327)
  - Memory card (3.8.4.7) (Page 327)
  - Device (3.8.4.8) (Page 328)

    Navigate to the numbered alarm/diagnostic and press ▶ button to select. When all desired alarms/diagnostics are selected, navigate to "Save settings" and press ▶ button to save and exit. Repeat for each list.

  By setting both the desired mode, and a status signal or specific alarms/diagnostics to simulate, the simulation is enabled.

To stop the diagnostic simulation, set parameter Simulation mode (3.8.4.1) (Page 320) to "Disabled".

CAUTION

Exception when simulating "Alarms and diagnostics"

When alarms and diagnostics are simulated:

- The simulation overrides device control, and
- the "Function check" symbol does not appear on the device display,

as is the case for any other type of simulation.

In the diagnostic log, any simulated alarms and diagnostics will be time-stamped `1900-01-01 00:00` if they have not previously appeared as true (not simulated) alarms/diagnostics. (Any true alarms/diagnostics are time-stamped with the actual date and time of each occurrence.)

All alarms and diagnostics can be simulated.

8.1.10 Diagnostics

SITRANS LT500 allows the user to enable/disable various alarms and diagnostics, such as those related to the sensor, process values (including level average and level difference), totalizers, and current outputs. For process values and totalizers, enable alarms; for all others, enable diagnostics.

It is important to note that a specific alarm/diagnostic must first be enabled before a fault notification of the same type will display, when a true fault actually occurs. For an example, see Note: "Enable alarms and diagnostics" at the beginning of chapter Parameter assignment (Page 193).

8.1.11 Audit trail

8.1.11.1 Audit trail logging

The audit trail logs includes any values or settings changed by users. The logs are automatically stored with information on the change, as well as the time (real-time), and by which interface (display, bus communication or USB) the change was made (parameter change log).

Audit trail information is logged on the memory card, as a parameter and command change file. For detailed information on the layout of each log type, see Files stored on memory card (Page 426).

The log files on the memory card contain all logged data. The latest 100 logs are stored in internal memory and are available on the local display.

The device can log up to 100 entries in each of the audit trail logs:

- Parameter change log (3.9.1) (Page 328)
- FW update change log (3.9.3) (Page 328)
- Diagnostic log (Page 192)

Each audit trail log can be cleared by the user. Once cleared, the content of the log no longer shows on the display, but remains on the memory card.

8.1.12 Maintenance

- Current date and time (2.7.1) (Page 269)

  The device has a built-in real-time clock used for timestamps of various events (for example alarms and configuration changes). The date and time can be updated in Set date and time (2.7.2) (Page 269).

- Restore (3.12.2) (Page 330)

  The device can be restored to its default settings from order, or from a saved configuration file.

- Device restart (3.11.1) (Page 329)

  The device can be restarted without disconnecting the power in menu item 3.11.2.

Other maintenance functions

Many other maintenance functions are available with the device, some of which are listed below:

- Device operating times Operating time (3.3.1) (Page 300)
- Maintenance schedules for the device, service and calibration Scheduled maintenance (3.3.2) (Page 301)
- Monitoring of values set for sensor, process values, totalizers, inputs and outputs, electronics temperature, and pump control Monitoring (3.4) (Page 306)
- Peak values (four) can also be configured for monitoring Peak values (3.5) (Page 311)

8.1.12.1 Diagnostic log

While parameter Device status (3.2.1) (Page 292) includes all active or unacknowledged alarms/diagnostics, Diagnostic log (3.2.2) (Page 292) includes the latest 100 alarms/diagnostics, acknowledged or not. (The diagnostic log can be cleared using parameter Clear diagnostic log (3.2.3) (Page 292).)

A list of alarms and diagnostics is available by default in operation view 6 - Type: Diagnostics.

There are two ways to remove alarms/diagnostics from the active list. Use parameter Acknowledge mode (3.2.4) (Page 293):

- Set to "Manual": The alarm/diagnostic remains in the list until the cause is removed and the alarm/diagnostic is manually acknowledged.

  The time of the acknowledgement is shown in the diagnostic log as long as the log is not cleared.
- Set to "Auto": The alarm/diagnostic is removed from the list when the cause is removed.

8.1.13 Security

SITRANS LT500 is shipped unlocked (security disabled).

Any power up of the device after security is enabled (Enable user PIN (5.5) (Page 354)), will prompt the user to "Select access level" (see Access control (Page 104)).

PINs are used for these access levels. To enable PINs, change a PIN, or recover a lost PIN, see Security (5) (Page 354).

For a list of parameters accessible only via "Expert" access level, see Expert user parameters (Page 424).

For more information on PINs related to a connected remote sensor, see Enter PIN (2.1.4) (Page 196).

8.2 Remote operation

SITRANS LT500 supports the following software tools for operation via remote communications:

- PC running SIMATIC PDM
- PC running a Field Device Tool (FDT)

For more information, see appendix Remote operation (Page 471).

Parameter assignment

9

This chapter includes all parameters accessible via local operation.

Note

Parameter visibility

A full list of available parameters and settings for each are shown in the manual. However, some parameters and settings may not appear on the device, as visibility is based on the application and configuration selected.

Parameters are identified by name (followed by parameter number in parenthesis), and organized into function groups within a menu structure.

See HMI menu structure (Page 478) for a list of parameter names, as they appear on the device.

Sensor specific parameters

- For parameters with settings noted as "Sensor specific", the value range is dependent on the type of remote sensor connected to the device.
- SITRANS LT500 controls certain parameters listed in this chapter. For more information, see Remote sensor parameters (Page 424).

NOTICE
Navigating parameters on local display • In parameter view, local buttons **(▲ ▼ ▶ ◀)** navigate in the direction of the arrow. • Press ▶ button to open edit view, or to save a modification.

Note

Parameter settings properly stored

In order to ensure parameter settings are properly stored in the device and to the memory card (if data logging is enabled), wait 30 seconds after any configuration change before removing power from the device.

Note

Enable alarms and diagnostics

For any function that includes a parameter to enable alarms/diagnostics: a specific alarm/diagnostic must first be enabled before a fault notification of the same type will display, when a true fault actually occurs.

- E.g. If the sensor diagnostic "Communication error" is not enabled under parameter Enable diagnostics (2.1.18) (Page 205), and a communication error actually occurs on the sensor, the fault will not show in the device (on the status field of the local display, or in the diagnostics log).

In the device menu that follows, alarms and diagnostics that are enabled by default are denoted by an "X" beside the specific alarm/diagnostic name.

Note

Output remains active

While the device is being configured, the output remains active and continues to respond to changes in the process.

9.1 Quick start (1)

Provides step-by-step procedure to setup common applications easily.

From the "Main menu" in parameter view, with "Quick start" menu selected, use the buttons on the HMI to select the following wizards:

- "Quick commissioning"
- "Pump control"
- "Basic control"
- "Alarms"

Press ▶ button to proceed through the wizard steps.

Note

Do not use quick start wizards to modify individual parameters. (Perform customization for your application only *after* quick start wizards have been completed).

- See Local commissioning (Page 55)

9.1.1 Quick commissioning (1.1)

Provides step-by-step procedure to configure parameters necessary for the commissioning of the device.

9.1.2 Pump control (1.2)

Provides step-by-step procedure to configure the control of one or more pumps.

9.1.3 Basic control (1.3)

Provides step-by-step procedure to configure the control of one or more relays based on a measurement.

9.1.4 Alarms (1.4)

Provides step-by-step procedure to configure alarms and assign them to a relay.

9.2 Setup (2)

9.2.1 Sensor (2.1)

9.2.1.1 Type (2.1.1)

Sets type of sensor connected to sensor input.

Setting	• Disabled • SITRANS LR110 • SITRANS LR120 • SITRANS Probe LU240 • Generic (4 ... 20 mA)
Default	Disabled

Note

Damping when generic sensor is used

If a generic sensor is used [setting "Generic (4 ... 20 mA)"], damping must be set in the sensor (pre-configured), or by using parameter "Damping value" on the LT500 device outputs (current output, fieldbus, local display).

Whenever the sensor (physically connected to the device) is replaced by another, a diagnostic "Sensor has changed" is shown as confirmation that the physical change of sensor was successful.

9.2.1.2 Frequency (2.1.2)

Sets the country specific settings for radar signals.

Setting	• Mode 1	EU, Albania, Andorra, Azerbaijan, Australia, Belarus, Bosnia and Herzegovina, Canada, Liechtenstein, Moldavia, Monaco, Montenegro, New Zealand, Northern Macedonia, Norway, San Marino, Saudi Arabia, Serbia, Switzerland, Turkey, Ukraine, United Kingdom, USA
	• Mode 2	South Korea, Taiwan, Thailand
	• Mode 3	South Africa
	• Mode 4	Russia
Default	Mode 1	

This parameter is only visible when a SITRANS LR1xx sensor is connected.

9.2.1.3 Input mode (2.1.3)

Sets mode for reading process values from sensor.

Setting	• Digital with failover • Digital • Analog
Default	Digital with failover

9.2.1.4 Enter PIN (2.1.4)

Unlocks write access to parameters in remote sensor by entering a sensor PIN that controls access management.

Setting	Sensor specific
Default	• 2457 (SITRANS Probe LU240) • Blank (no value) for SITRANS LR1xx

This parameter is visible when the device is connected to a remote sensor, and write access to the sensor is locked.

Enter sensor PIN to unlock.

If the PIN is unknown, see instructions (in sensor documentation) to reset the PIN. The PIN must first be changed in the connected remote sensor before entering the PIN value in LT500.

9.2.1.5 Material type (2.1.5)

Used to optimize performance based on material type.

Setting	• Liquid • Solid
Default	Liquid

This parameter does not appear in the quick commissioning wizard when a generic mA sensor is connected.

9.2.1.6 Calibration (2.1.6)

Lower calibration point (2.1.6.1)

Sets distance from sensor reference point to lower calibration point: usually process empty level.

Setting	Sensor specific
Default	6 m

Upper calibration point (2.1.6.2)

Sets distance from sensor reference point to upper calibration point: usually process full level.

Setting	Sensor specific
Default	0 m

Current at lower calibration point (2.1.6.3)

Sets loop current produced by the generic mA sensor when material is at lower calibration point.

Setting	4 ... 20 mA
Default	4 mA

This parameter is only visible when a generic mA sensor is connected.

Current at upper calibration point (2.1.6.4)

Sets loop current produced by the generic mA sensor when material is at upper calibration point.

Setting	4 ... 20 mA
Default	20 mA

This parameter is only visible when a generic mA sensor is connected.

Lower level point (2.1.6.5)

Sets level value when material is at lower calibration point.

Setting	-9999999 ... 9999999
Default	0 m

Upper level point (2.1.6.6)

Sets level value when material is at upper calibration point.

Setting	-9999999 ... 9999999
Default	6 m

Level offset (2.1.6.7)

Sets offset to ensure the most accurate level reading.

Use this for example, when adjusting for sea level.

Setting	-9999999 ... 9999999
Default	0 m

Sensor offset (2.1.6.8)

Sets offset to compensate for changes in sensor reference point.

Changes to sensor reference point may result from adding a thicker gasket or reducing the standoff/nozzle height.

Setting	-9999999 ... 9999999
Default	0 m

If amount of parameter "Sensor offset" is known, enter the constant that can be added to or subtracted from sensor value[1)] to compensate if the sensor reference point has shifted.

[1)] The value produced by the echo processing which represents the distance from sensor reference point to the target.

Near range (2.1.6.9)

Sets minimum distance from sensor reference point, beyond which an echo should be considered valid.

This is sometimes referred to as blanking or a dead zone.

Setting	Sensor specific
Default	Sensor specific

Far range (2.1.6.10)

Sets maximum distance from sensor reference point, within which an echo should be considered valid.

Use this feature if the measured surface can drop below the lower calibration point in normal operation.

Setting	Sensor specific
Default	7 m

Auto sound velocity wizard (2.1.6.11)

Used to adjust the speed of sound, based on an actual measurement, to change the distance value.

Note

Importance of the distance measurement used in the calibration wizard

To successfully calibrate using "Auto sound velocity wizard":

- "Auto sound velocity wizard" must be performed outside of the short shot range (i.e. set distance greater than 1.0 meter).

This wizard is only visible when a SITRANS Probe LU240 sensor is connected.

Conditions for use of this feature:

- The acoustic beam atmosphere is other than air
- The acoustic temperature is unknown
- The reading accuracy is acceptable at higher material levels only

For best results, calibrate with the level at a known value near lower calibration point.

Using Auto sound velocity

Start with a steady distance at a known high distance value (high distance value equates to a low level value).

1. Review the distance measurement via local display for approximately 30 seconds to verify repeatability.
2. Measure the actual distance (for example, with a tape measure).
3. Enter the actual distance, defined in parameter "Units".

Repeat this procedure if the atmosphere type, concentration, or temperature conditions are different from when the last sound velocity calibration was performed.

Actual distance

Measure and enter the actual distance from the sensor face to the material.

Setting	Not applicable
Default	Current distance value is displayed, or "----" if reading has a bad status.

Distance (2.1.6.12)

Displays corrected distance after wizard successfully completed.

Auto sound velocity wizard error (2.1.6.13)

This parameter is only visible when the Auto sound velocity wizard fails.

Contact Technical Support with code displayed.

9.2.1.7 Fail-safe LOE timer (2.1.7)

Sets amount of time loss of echo will persist before device enters fail-safe state.

Setting	0 to 720 s
Default	100 s

This parameter is only visible when a SITRANS Probe LU240 sensor or SITRANS LR1xx sensor is connected.

9.2.1.8 Rate (2.1.8)

Rate of change (2.1.8.1)

Displays rate of change in emptying or filling of medium in vessel.

Fill rate indicator limit (2.1.8.2)

Sets fill rate required to activate fill indicator on local display.

Setting	0.001 ... 20
Default	0.01 m/min

Empty rate indicator limit (2.1.8.3)

Sets empty rate required to activate empty indicator on local display.

Setting	0.001 ... 20
Default	0.01 m/min

Fill rate alarm limit (2.1.8.4)

Sets fill rate required to activate fill alarm.

Setting	0.001 ... 30
Default	0.11 m/min

Empty rate alarm limit (2.1.8.5)

Sets empty rate required to activate empty alarm.

Setting	0.001 ... 30
Default	0.11 m/min

Fill rate limit (2.1.8.6)

Sets the maximum fill rate the device can track.

Setting	0.001 ... 20
Default	0.1 m/min

This parameter is only visible when a SITRANS Probe LU240 sensor is connected.

Empty rate limit (2.1.8.7)

Sets the maximum empty rate the device can track.

Setting	0.001 ... 20
Default	0.1 m/min

This parameter is only visible when a SITRANS Probe LU240 sensor is connected.

Sensor damping value (2.1.8.8)

Used in the damping (filtering) of the raw sensor value to smooth out response to sudden changes in measurement. Sets time after which output signal reaches 63% of final value.

Setting	Sensor specific
Default	100 s

This parameter is only visible when a SITRANS Probe LU240 sensor or SITRANS LR1xx sensor is connected.

If a generic sensor is used and damping cannot be set in the sensor, use parameter "Damping value" per LT500 current outputs, fieldbus, or local display.

9.2.1.9 Auto false echo suppression (2.1.9)

Used to screen out false echoes in a vessel with known obstructions.

A learned TVT (time varying threshold) replaces the default TVT over a specified range.

Note

Measurement affected by AFES function

- During "Enable", "Disable" or "Learn" of auto false echo suppression, measurement will be momentarily interrupted.

Mode (2.1.9.1)

Displays mode set for auto false echo suppression.

Range (2.1.9.2)

Sets end point of the learned TVT distance.

Setting	Sensor specific
Default	1.0 m

Learn (2.1.9.3)

Used to "learn" the TVT (time varying threshold) that replaces the default TVT over a specified range, then enables auto false echo suppression.

Setting	• Cancel • Ok
Default	Cancel

Enable (2.1.9.4)

Enables auto false echo suppression.

This parameter appears when function is currently disabled.

Setting	• Cancel • Ok
Default	Cancel

Note

Parameter visible based on configuration

If parameter is not visible, perform a new "Learn" (2.1.7.3), which will also enable auto false echo suppression.

Disable (2.1.9.5)

Disables auto false echo suppression.

This parameter appears when function is currently enabled.

Setting	• Cancel • Ok
Default	Cancel

9.2.1.10 Custom TVT shaper mode (2.1.10)

Enables/disables customization of TVT curve.

Setting	• Disabled • Enabled
Default	Disabled

This parameter is only visible when a SITRANS Probe LU240 sensor is connected.

9.2.1.11 Custom TVT breakpoints (2.1.11)

The TVT breakpoints are only visible when parameter "Custom TVT shaper mode" is enabled.

Breakpoint 1 (2.1.11.1) to Breakpoint 40 (2.1.11.40)

Sets TVT offset for breakpoint on TVT. Shaping points can be raised (positive number) or lowered (negative number).

Setting	Offset -50 to +50 dB
Default	0 dB

9.2.1.12 Sensor override input (2.1.12)

Enables sensor override function by setting digital input to use, or disabled function.

Use this function to override the material reading by a digital input, such as a contacting point device. The material reading will be fixed at the programmed override value until the digital input is released.

Setting	• Disabled • Digital input 1 • Digital input 2
Default	Disabled

9.2.1.13 Sensor override value (2.1.13)

Sets value to substitute for current reading when sensor override function is enabled, and digital input is activated.

Setting	-9999999 ... 9999999
Default	0 m

9.2.1.14 Sensor override time delay (2.1.14)

Sets the time used to calm (debounce) the override condition input.

Setting	0 ... 3600
Default	5 s

9.2.1.15 Enable low level cut-off (2.1.15)

Enables/disables low level cut-off function.

Setting	• Disabled • Enabled
Default	Disabled

9.2.1.16 Low level cut-off (2.1.16)

Sets lower limit on measured value (before any offset applied).

For example, set value to zero to prevent a negative level measurement.

Setting	-9999999 ... 9999999
Default	0 m

9.2.1.17 Preconfigured (2.1.17)

Defines whether the sensor is preconfigured. Choose "Yes" so that the device will not overwrite the sensor's configuration.

Parameter should be set before connecting remote sensor.

Setting	• No • Yes
Default	No

If set to "No", all sensor parameter settings are reset to factory default, before controlled parameter settings are applied.

If set to "Yes", no reset is performed before controlled parameter settings are applied.

For more information, see Remote sensor parameters (Page 424).

9.2.1.18 Enable diagnostics (2.1.18)

Enables/disables diagnostics.

Diagnostics selected in list (shown with filled icon) are enabled.

Setting	[X] 0 Sensor not found [X] 1 Sensor not supported [X] 2 Invalid device configuration [X] 3 Communication error [X] 4 Sensor security lock error [X] 5 Invalid pump configuration [ ] 6 Low level cut-off active [X] 7 Sensor override active [ ] 8 Filling too quickly [ ] 9 Emptying too quickly [X] 10 Sensor has changed [X] 11 Sensor input not calibrated [X] 12 Loss of echo [X] 13 Internal error in sensor [X] 14 Sensor failure [X] 15 Invalid primary measuring device configuration [X] 16 Sensor type mismatch [X] 17 Invalid application configuration [X] 18 Sensor input mode changed [X] 19 Sensor failure [X] 20 One or more process values with bad status [X] 21 Spill condition has been reached or is imminent
Default	[X] indicates enabled by default [ ] indicates disabled by default

9.2.1.19 Select fail-safe diagnostics (2.1.19)

Sets the sensor diagnostics that will cause a fail-safe behavior of the relay.

Setting	[X] 0 Sensor not found [X] 1 Sensor not supported [ ] 2 Invalid device configuration [ ] 3 Communication error [ ] 4 Sensor security lock error [ ] 5 Invalid pump configuration [ ] 6 Low level cut-off active [ ] 7 Sensor override active [ ] 8 Filling too quickly [ ] 9 Emptying too quickly [ ] 10 Sensor has changed [ ] 11 Sensor input not calibrated [X] 12 Loss of echo [X] 13 Internal error in sensor [X] 14 Sensor failure [ ] 15 Invalid primary measuring device configuration [ ] 16 Sensor type mismatch [ ] 17 Invalid application configuration [ ] 18 Sensor input mode changed [X] 19 Sensor failure [ ] 20 One or more process values with bad status [ ] 21 Spill condition has been reached or is imminent [ ] 64 Maintenance required [ ] 65 Maintenance demanded [ ] 66 Echo profile storage memory is full [ ] 67 Volume could not be calculated
Default	[X] indicates enabled by default [ ] indicates disabled by default

9.2.1.20 Measurement point 2 (2.1.20)

<Point 2 parameters> 2.1.20.1 to 2.1.20.19

Note

Parameters for "Measurement point 2"

Parameters for point 2 are the same as those listed previously (for point 1: 2.1.1 to 2.1.19).

Specific diagnostic codes are available here: Fault codes and corrective actions (Page 364).

For a complete list of parameters see HMI menu structure (Page 478).

9.2.2 Process values (2.2)

9.2.2.1 Level (point 1) (2.2.1)

Units (2.2.1.1)

Sets the unit to be applied for the local operation. It is not used for the communication interface.

Setting	• m (meters) • cm (centimeters) • mm (millimeters) • ft (feet) • in (inches)
Default	m

Decimal places (2.2.1.2)

Sets the number of decimal places used by the local display.

Setting	• Auto • None • 1 • 2 • 3 • 4 • 5 • 6
Default	2

Enable alarms (2.2.1.3)

Enables/disables process value alarms and diagnostics.

Setting	[X] 320 Level (point 1) above alarm limit [X] 321 Level (point 1) above warning limit [X] 322 Level (point 1) below warning limit [X] 323 Level (point 1) below alarm limit [ ] 384 Level (point 1) out-of-bounds alarm [ ] 385 Level (point 1) in-bounds alarm
Default	[X] indicates enabled by default [ ] indicates disabled by default

Upper alarm limit (2.2.1.4)

Sets the upper alarm limit. A diagnostic is generated if the process value exceeds this limit.

Setting	-99999 ... 99999
Default	6.0 m

Upper warning limit (2.2.1.5)

Sets the upper warning limit. A diagnostic is generated if the process value exceeds this limit.

Setting	-99999 ... 99999
Default	6.0 m

Lower warning limit (2.2.1.6)

Sets the lower warning limit. A diagnostic is generated if the process value falls below this limit.

Setting	-99999 ... 99999
Default	0.0 m

Lower alarm limit (2.2.1.7)

Sets the lower alarm limit. A diagnostic is generated if the process value falls below this limit.

Setting	-99999 ... 99999
Default	0.0 m

Hysteresis (2.2.1.8)

Sets hysteresis for alarm and warning limits. Hysteresis is distance between limits for activation and deactivation of an alarm/warning.

Setting	0 ... 99999
Default	0.1 m

9.2.2.2 Space (point 1) (2.2.2)

Units (2.2.2.1)

Displays measurement units used.

These units are derived from level, so they can only be configured through the "Units" parameter for process value "Level".

Decimal places (2.2.2.2)

Sets the number of decimal places used by the local display.

Enable alarms (2.2.2.3)

Enables/disables process value alarms and diagnostics.

Setting	[X] 324 Space (point 1) above alarm limit [X] 325 Space (point 1) above warning limit [X] 326 Space (point 1) below warning limit [X] 327 Space (point 1) below alarm limit
Default	[X] indicates enabled by default [ ] indicates disabled by default

Upper alarm limit (2.2.2.4)

Sets the upper alarm limit. A diagnostic is generated if the process value exceeds this limit.

Setting	-99999 ... 99999
Default	6.0 m

Upper warning limit (2.2.2.5)

Sets the upper warning limit. A diagnostic is generated if the process value exceeds this limit.

Setting	-99999 ... 99999
Default	6.0 m

Lower warning limit (2.2.2.6)

Sets the lower warning limit. A diagnostic is generated if the process value falls below this limit.

Setting	-99999 ... 99999
Default	0.0 m

Lower alarm limit (2.2.2.7)

Sets the lower alarm limit. A diagnostic is generated if the process value falls below this limit.

Setting	-99999 ... 99999
Default	0.0 m

Hysteresis (2.2.2.8)

Sets hysteresis for alarm and warning limits. Hysteresis is distance between limits for activation and deactivation of an alarm/warning.

Setting	0 ... 99999
Default	0.1 m

9.2.2.3 Distance (point 1) (2.2.3)

Units (2.2.3.1)

Displays measurement units used.

These units are derived from level, so they can only be configured through the "Units" parameter for process value "Level".

Decimal places (2.2.3.2)

Sets the number of decimal places used by the local display.

Enable alarms (2.2.3.3)

Enables/disables process value alarms and diagnostics.

Setting	[X] 328 Distance (point 1) above alarm limit [X] 329 Distance (point 1) above warning limit [X] 330 Distance (point 1) below warning limit [X] 331 Distance (point 1) below alarm limit
Default	[X] indicates enabled by default [ ] indicates disabled by default

Upper alarm limit (2.2.3.4)

Sets the upper alarm limit. A diagnostic is generated if the process value exceeds this limit.

Setting	-99999 ... 99999
Default	6.0 m

Upper warning limit (2.2.3.5)

Sets the upper warning limit. A diagnostic is generated if the process value exceeds this limit.

Setting	-99999 ... 99999
Default	6.0 m

Lower warning limit (2.2.3.6)

Sets the lower warning limit. A diagnostic is generated if the process value falls below this limit.

Setting	-99999 ... 99999
Default	0.0 m

Lower alarm limit (2.2.3.7)

Sets the lower alarm limit. A diagnostic is generated if the process value falls below this limit.

Setting	-99999 ... 99999
Default	0.0 m

Hysteresis (2.2.3.8)

Sets hysteresis for alarm and warning limits. Hysteresis is distance between limits for activation and deactivation of an alarm/warning.

Setting	0 ... 99999
Default	0.1 m

9.2.2.4 Head (point 1) (2.2.4)

Units (2.2.4.1)

Displays measurement units used.

These units are derived from level, so they can only be configured through the "Units" parameter for process value "Level".

Decimal places (2.2.4.2)

Sets the number of decimal places used by the local display.

Enable alarms (2.2.4.3)

Enables/disables process value alarms and diagnostics.

Setting	[X] 336 Head (point 1) above alarm limit [X] 337 Head (point 1) above warning limit [X] 338 Head (point 1) below warning limit [X] 339 Head (point 1) below alarm limit
Default	[X] indicates enabled by default [ ] indicates disabled by default

Upper alarm limit (2.2.4.4)

Sets the upper alarm limit. A diagnostic is generated if the process value exceeds this limit.

Setting	-99999 ... 99999
Default	6.0 m

Upper warning limit (2.2.4.5)

Sets the upper warning limit. A diagnostic is generated if the process value exceeds this limit.

Setting	-99999 ... 99999
Default	6.0 m

Lower warning limit (2.2.4.6)

Sets the lower warning limit. A diagnostic is generated if the process value falls below this limit.

Setting	-99999 ... 99999
Default	0.0 m

Lower alarm limit (2.2.4.7)

Sets the lower alarm limit. A diagnostic is generated if the process value falls below this limit.

Setting	-99999 ... 99999
Default	0.0 m

Hysteresis (2.2.4.8)

Sets hysteresis for alarm and warning limits. Hysteresis is distance between limits for activation and deactivation of an alarm/warning.

Setting	0 ... 99999
Default	0.1 m

9.2.2.5 Volume (point 1) (2.2.5)

Units (2.2.5.1)

Sets the unit to be applied for the local operation. It is not used for the communication interface.

Setting	• l (liters) • hl (hectoliters) • m^3 (cubic meters) • gal (US gallons) • gal (UK) (imperial gallons) • bbl (US) (31.5 gallon barrels) • bbl-beer (31 US gallon barrels)	• bbl (42 US gallon barrels) • in^3 (cubic inches) • ft^3 (cubic feet) • yd^3 (cubic yards) • bu (bushels) • Custom
Default	l (liters)	

Custom units (2.2.5.2)

Defines the name of the custom unit. Once entered, it will be available in the unit selection list.

Setting	Not applicable
Default	Custom

Custom conversion factor (2.2.5.3)

Sets the conversion factor for the custom unit in relation to 1 m^3.

Setting	0 ... 9999999
Default	1

Decimal places (2.2.5.4)

Sets the number of decimal places used by the local display.

Setting	• Auto • None • 1 • 2 • 3 • 4 • 5 • 6
Default	2

Enable alarms (2.2.5.5)

Enables/disables process value alarms and diagnostics.

Setting	[X] 332 Volume (point 1) above alarm limit [X] 333 Volume (point 1) above warning limit [X] 334 Volume (point 1) below warning limit [X] 335 Volume (point 1) below alarm limit
Default	[X] indicates enabled by default [ ] indicates disabled by default

Upper alarm limit (2.2.5.6)

Sets the upper alarm limit. A diagnostic is generated if the process value exceeds this limit.

Setting	0 ... 99999
Default	0 liters

Upper warning limit (2.2.5.7)

Sets the upper warning limit. A diagnostic is generated if the process value exceeds this limit.

Setting	0 ... 99999
Default	0 liters

Lower warning limit (2.2.5.8)

Sets the lower warning limit. A diagnostic is generated if the process value falls below this limit.

Setting	0 ... 99999
Default	0 liters

Lower alarm limit (2.2.5.9)

Sets the lower alarm limit. A diagnostic is generated if the process value falls below this limit.

Setting	0 ... 99999
Default	0 liters

Hysteresis (2.2.5.10)

Sets hysteresis for alarm and warning limits. Hysteresis is distance between limits for activation and deactivation of an alarm/warning.

Setting	0 ... 99999
Default	0.1 liters

9.2.2.6 Volume flow (point 1) (2.2.6)

Note

Proper setting of limits for volume flow diagnostics

Enable volume flow diagnostics and set limits carefully so that a sensor reading outside the normal operating range can be monitored.

Units (2.2.6.1)

Sets the unit to be applied for the local operation. It is not used for the communication interface.

Setting	• l/s (liters per second) • l/min (liters per minute) • l/h (liters per hour) • l/d (liters per day) • Ml/d (megaliters per day) • hl/s (hectoliters per second) • hl/min (hectoliters per minute) • hl/h (hectoliters per hour) • hl/d (hectoliters per day) • m³/s (cubic meters per second) • m³/min (cubic meters per minute) • m³/h (cubic meters per hour) • m³/d (cubic meters per day) • Mm³/d (million cubic meters per day) • gal/s (US gallons per second) • gal/min (US gallons per minute) • gal/h (US gallons per hour) • gal/d (US gallons per day) • Mgal/d (US megagallons per day) • gal (UK)/s (imperial gallons per second) • gal (UK)/min (imperial gallons per minute) • gal (UK)/h (imperial gallons per hour) • gal (UK)/d (imperial gallons per day) • bbl-beer/s (31 US gallon barrels per second) • bbl-beer/min (31 US gallon barrels per minute) • bbl-beer/h (31 US gallon barrels per hour) • bbl-beer/d (31 US gallon barrels per day) • bbl/s (42 US gallon barrels per second) • bbl/min (42 US gallon barrels per minute)	• bbl/h (42 US gallon barrels per hour) • bbl/d (42 US gallon barrels per day) • kbbl/d (thousand 42 US gallon barrels per day) • Mbbl/d (million 42 US gallon barrels per day) • bbl (US)/s (31.5 US gallon barrels per second) • bbl (US)/min (31.5 US gallon barrels per minute) • bbl (US)/h (31.5 US gallon barrels per hour) • bbl (US)/d (31.5 US gallon barrels per day) • ft³/s (cubic feet per second) • ft³/min (cubic feet per minute) • ft³/h (cubic feet per hour) • ft³/d (cubic feet per day) • Mft³/d (million cubic feet per day) • AF/min (acre-feet per minute) • AF/h (acre-feet per hour) • AF/d (acre-feet per day) • in³/s (cubic inches per second) • in³/min (cubic inches per minute) • in³/h (cubic inches per hour) • in³/d (cubic inches per day) • yd³/s (cubic yards per second) • yd³/min (cubic yards per minute) • yd³/h (cubic yards per hour) • yd³/d (cubic yards per day) • bu/s (bushels per second) • bu/min (bushels per minute) • bu/h (bushels per hour) • bu/d (bushels per day) • custom
Default	l/s (liters per second)	

Custom units (2.2.6.2)

Defines the name of the custom unit. Once entered, it will be available in the unit selection list.

Setting	Not applicable
Default	Custom

Custom conversion factor (2.2.6.3)

Sets the conversion factor for the custom unit in relation to 1 m^3/s.

Setting	0 ... 9999999
Default	1

Decimal places (2.2.6.4)

Sets the number of decimal places used by the local display.

Setting	• Auto • None • 1 • 2 • 3 • 4 • 5 • 6
Default	2

Enable alarms (2.2.6.5)

Enables/disables process value alarms and diagnostics.

Setting	[X] 100 Volume flow (point 1) above alarm limit [X] 101 Volume flow (point 1) above warning limit [X] 102 Volume flow (point 1) below warning limit [X] 103 Volume flow (point 1) below alarm limit
Default	[X] indicates enabled by default [ ] indicates disabled by default

Upper alarm limit (2.2.6.6)

Sets the upper alarm limit. A diagnostic is generated if the process value exceeds this limit.

Setting	0 ... 99999
Default	0 l/s

Upper warning limit (2.2.6.7)

Sets the upper warning limit. A diagnostic is generated if the process value exceeds this limit.

Setting	0 ... 99999
Default	0 l/s

Lower warning limit (2.2.6.8)

Sets the lower warning limit. A diagnostic is generated if the process value falls below this limit.

Setting	0 ... 99999
Default	0 l/s

Lower alarm limit (2.2.6.9)

Sets the lower alarm limit. A diagnostic is generated if the process value falls below this limit.

Setting	0 ... 99999
Default	0 l/s

Hysteresis (2.2.6.10)

Sets hysteresis for alarm and warning limits. Hysteresis is distance between limits for activation and deactivation of an alarm/warning.

Setting	0 ... 99999
Default	0.1 l/s

9.2.2.7 Sensor temperature (point 1) (2.2.7)

Units (2.2.7.1)

Sets the unit to be applied for the local operation. It is not used for the communication interface.

Setting	• °C (degrees Celsius) • °F (degrees Fahrenheit) • °R (degrees Rankine) • K (Kelvin)
Default	°C (degrees Celsius)

Decimal places (2.2.7.2)

Sets the number of decimal places used by the local display.

Setting	• Auto • None • 1 • 2 • 3 • 4 • 5 • 6
Default	2

Enable alarms (2.2.7.3)

Enables/disables process value alarms and diagnostics.

Setting	[X] 108 Sensor temperature (point 1) above alarm limit [X] 109 Sensor temperature (point 1) above warning limit [X] 110 Sensor temperature (point 1) below warning limit [X] 111 Sensor temperature (point 1) below alarm limit
Default	[X] indicates enabled by default [ ] indicates disabled by default

Upper alarm limit (2.2.7.4)

Sets the upper alarm limit. A diagnostic is generated if the process value exceeds this limit.

Setting	-100 ... 100
Default	100 ° C

Upper warning limit (2.2.7.5)

Sets the upper warning limit. A diagnostic is generated if the process value exceeds this limit.

Setting	-100 ... 100
Default	100 ° C

Lower warning limit (2.2.7.6)

Sets the lower warning limit. A diagnostic is generated if the process value falls below this limit.

Setting	-100 ... 100
Default	-100 ° C

Lower alarm limit (2.2.7.7)

Sets the lower alarm limit. A diagnostic is generated if the process value falls below this limit.

Setting	-100 ... 100
Default	-100 ° C

Hysteresis (2.2.7.8)

Sets hysteresis for alarm and warning limits. Hysteresis is distance between limits for activation and deactivation of an alarm/warning.

Setting	0 ... 200
Default	0.1 ° C

9.2.2.8 <Point 2 parameters> (2.2.8) to (2.2.14)

Note

Process value parameters for point 2

Parameters for point 2 are the same as those listed previously (for point 1: 2.2.1. to 2.2.7.).

For a complete list of parameters see HMI menu structure (Page 478).

9.2.2.9 Level difference (2.2.15)

The "Level difference" process value is a calculated value based on the difference between the reading for measurement point 1 and measurement point 2.

Units (2.2.15.1)

Displays measurement units used.

These units are derived from level, so they can only be configured through the "Units" parameter for process value "Level".

Decimal places (2.2.15.2)

Displays decimal places used.

As units for Level difference and Level average are derived from level, so is the setting for decimal places. It can only be configured through the "Decimal places" parameter for process value "Level".

Enable alarms (2.2.15.3)

Enables/disables process value alarms and diagnostics.

Setting	[ ] 368 Level difference above alarm limit [ ] 369 Level difference above warning limit [ ] 370 Level difference below warning limit [ ] 371 Level difference below alarm limit
Default	[X] indicates enabled by default [ ] indicates disabled by default

Upper alarm limit (2.2.15.4)

Sets the upper alarm limit. A diagnostic is generated if the process value exceeds this limit.

Setting	-99999 ... 99999
Default	6 m

Upper warning limit (2.2.15.5)

Sets the upper warning limit. A diagnostic is generated if the process value exceeds this limit.

Setting	-99999 ... 99999
Default	6 m

Lower warning limit (2.2.15.6)

Sets the lower warning limit. A diagnostic is generated if the process value falls below this limit.

Setting	-99999 ... 99999
Default	-6 m

Lower alarm limit (2.2.15.7)

Sets the lower alarm limit. A diagnostic is generated if the process value falls below this limit.

Setting	-99999 ... 99999
Default	-6 m

Hysteresis (2.2.15.8)

Sets hysteresis for alarm and warning limits. Hysteresis is distance between limits for activation and deactivation of an alarm/warning.

Setting	0 ... 99999
Default	0.1 m

9.2.2.10 Level average (2.2.16)

The "Level average" process value is a calculated value based on the average of the readings for measurement point 1 and measurement point 2.

Units (2.2.16.1)

Displays measurement units used.

These units are derived from level, so they can only be configured through the "Units" parameter for process value "Level".

Decimal places (2.2.16.2)

Displays decimal places used.

As units for Level difference and Level average are derived from level, so is the setting for decimal places. It can only be configured through the "Decimal places" parameter for process value "Level".

Enable alarms (2.2.16.3)

Enables/disables process value alarms and diagnostics.

Setting	[ ] 372 Level average above alarm limit [ ] 373 Level average above warning limit [ ] 374 Level average below warning limit [ ] 375 Level average below alarm limit
Default	[X] indicates enabled by default [ ] indicates disabled by default

Upper alarm limit (2.2.16.4)

Sets the upper alarm limit. A diagnostic is generated if the process value exceeds this limit.

Setting	-99999 ... 99999
Default	6 m

Upper warning limit (2.2.16.5)

Sets the upper warning limit. A diagnostic is generated if the process value exceeds this limit.

Setting	-99999 ... 99999
Default	6 m

Lower warning limit (2.2.16.6)

Sets the lower warning limit. A diagnostic is generated if the process value falls below this limit.

Setting	-99999 ... 99999
Default	0.0 m

Lower alarm limit (2.2.16.7)

Sets the lower alarm limit. A diagnostic is generated if the process value falls below this limit.

Setting	-99999 ... 99999
Default	0.0 m

Hysteresis (2.2.16.8)

Sets hysteresis for alarm and warning limits. Hysteresis is distance between limits for activation and deactivation of an alarm/warning.

Setting	0 ... 99999
Default	0.1 m

9.2.3 Totalizers (2.3)

9.2.3.1 Totalizer 1 (2.3.1)

Process value (2.3.1.1)

Sets the process value to be totalized.

Setting	• Volume flow (point 1) • Volume flow (point 2) • Pumped volume (point 1) • Pumped volume (point 2)
Default	Volume flow (point 1)

Units (2.3.1.2)

Sets the unit to be applied for the local operation. It is not used for the communication interface.

Setting	• l (liters) • Ml (megaliters) • hl (hectoliters) • m³ (cubic meters) • Mm³ (million cubic meters) • gal (US gallons) • Mgal (US megagallons) • gal (UK) (imperial gallons) • bbl (US) (31.5 US gallon barrels) • bbl-beer (31 US gallon barrels) • bbl (42 US gallon barrels) • kbbl (thousand 42 US gallon barrels) • Mbbl (thousand 42 US gallon barrels) • MMCF (million cubic feet) • AF (acre-feet) • in³ (cubic inches) • f³ (cubic feet) • yd³ (cubic yards) • bu (bushels) • cm³ (cubic centimeters)	• fl oz (US fluid ounces) • kl (kiloliters) • ml (milliliters) • mm³ (cubic millimeters) • µbbl (millionth of a 42 US gallon barrel) • µgal (US microgallons) • µgal (UK) (imperial microgallons) • µm³ (cubic micrometers) • kgal (US kilogallons) • kgal (UK) (imperial kilogallons) • km³ (cubic kilometers) • mbbl (thousandth of a 42 US gallon barrel) • mgal (US milligallons) • mgal (UK) (imperial milligallons) • Mgal (UK) (imperial megagallons) • Custom
Default	l (liters)	

Custom units (2.3.1.4)

Defines the name of the custom unit. Once entered, it will be available in the unit selection list.

Setting	Not applicable
Default	Custom

Custom conversion factor (2.3.1.5)

Sets the conversion factor for the custom unit in relation to 1 m³.

Setting	0 ... 9999999
Default	1

Decimal places (2.3.1.6)

Sets the number of decimal places used by the local display.

Setting	• Auto • None • 1 • 2 • 3 • 4 • 5 • 6
Default	2

Fail-safe behavior (2.3.1.8)

Sets behavior in case of a fail-safe state.

Setting	• Pause counting (see caution below) • Count latest good value
Default	Pause counting

CAUTION

Totalizers stop counting on bad status

When this parameter is set to "Pause counting" and the process value has a "Bad" status, totalizers will stop counting (hold their last value prior to the bad status).

Reset (2.3.1.9)

Sets the totalized amount to zero.

Setting	• Cancel • Ok
Default	Cancel

Preset value (2.3.1.10)

Sets a specific starting amount for "Preset" function.

Setting	0 ... 9999999
Default	0 liters

Preset (2.3.1.11)

Used to start totalizing from amount set in parameter "Preset value". Current totalized value will be replaced.

Setting	• Cancel • Ok
Default	Cancel

Limit monitoring (2.3.1.12)

Enable alarms (2.3.1.12.1)

Enables/disables totalizer alarms and diagnostics.

Setting	[X] 136 Totalizer 1 above alarm limit [X] 137 Totalizer 1 above warning limit [ ] 138 Totalizer 1 below warning limit [ ] 139 Totalizer 1 below alarm limit
Default	[X] indicates enabled by default [ ] indicates disabled by default

Upper alarm limit (2.3.1.12.2)

Sets the upper alarm limit. A diagnostic is generated if the process value exceeds this limit.

Setting	0 ... 9999999
Default	Based on user configuration

Upper warning limit (2.3.1.12.3)

Sets the upper warning limit. A diagnostic is generated if the process value exceeds this limit.

Setting	0 ... 9999999
Default	Based on user configuration

Lower warning limit (2.3.1.12.4)

Sets the lower warning limit. A diagnostic is generated if the process value falls below this limit.

Setting	0 ... 9999999
Default	Based on user configuration

Lower alarm limit (2.3.1.12.5)

Sets the lower alarm limit. A diagnostic is generated if the process value falls below this limit.

Setting	0 ... 9999999
Default	Based on user configuration

Hysteresis (2.3.1.12.6)

Sets difference between Upper Limit and Lower Limit for a select process value being monitored, that must occur before an Event is counted.

Setting	0 ... 99999
Default	0.1 liters

Daily reset (at midnight) (2.3.1.13)

Enables/disables daily reset of totalizer.

Setting	• Disabled • Enabled
Default	Disabled

Auto reset (2.3.1.14)

Enables/disables auto reset of totalizer.

Setting	• Disabled • Enabled
Default	Disabled

Auto reset limit (2.3.1.15)

Sets the limit for totalizer reset.

Setting	No limits
Default	0 liters

9.2.3.2 Totalizer 2 (2.3.2) to Totalizer 4 (2.3.4)

Note

Parameters for "Totalizer 2" to "Totalizer 4"

Parameters for "Totalizer 2" to "Totalizer 4" are the same as those listed previously (for "Totalizer 1": 2.3.1.1 to 2.3.1.15).

Specific diagnostic codes are available here: Fault codes and corrective actions (Page 364).

For a complete list of parameters see HMI menu structure (Page 478).

9.2.3.3 Reset all totalizers (2.3.5)

Sets the totalized amount of all totalizers to zero.

Setting	• Cancel • Ok
Default	Cancel

9.2.4 Inputs and outputs (2.4)

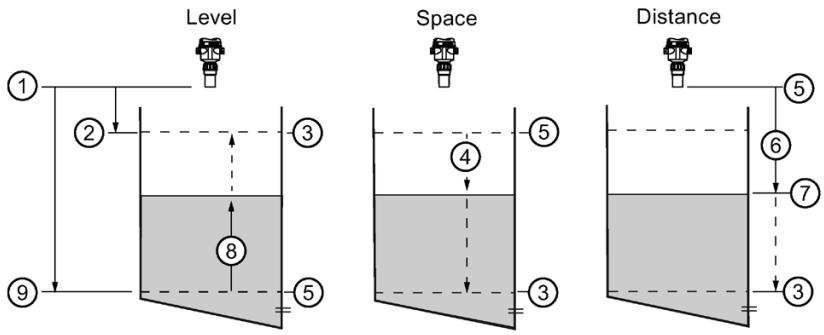

① Sensor reference point
② Upper calibration point
③ 20 mA 100%
④ Space
⑤ 4 mA 0%
⑥ Distance
⑦ Material level
⑧ Level
⑨ Lower calibration point

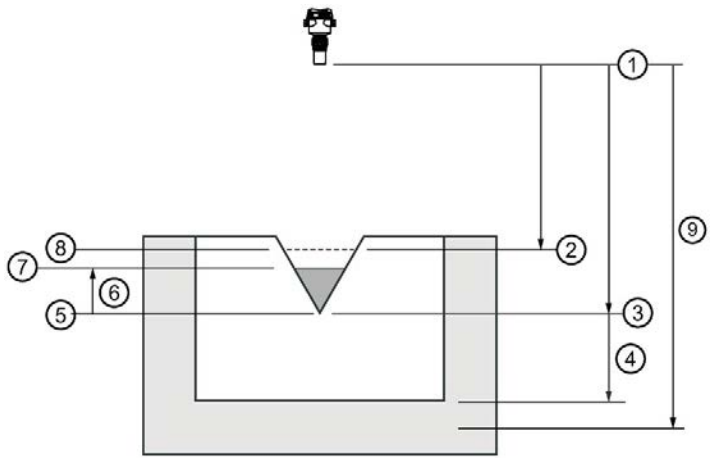

① Sensor reference point
② Upper calibration point
③ Lower calibration point
④ Zero head offset
⑤ Zero head
⑥ Head
⑦ Material surface
⑧ Maximum head/Maximum flow [1)]
⑨ Far range

[1)] For volume flow, refer to PMD supplier documentation.

9.2.4.1 Current output (HART) (2.4.1)

Loop current mode (2.4.1.1)

Sets operation of Loop current for HART multidrop mode.

Setting	• Disabled • 0/4 ... 20 mA • Multidrop mode
Default	4 ... 20 mA

Look current scale (2.4.1.2)

Sets nominal range of current output, saturation limits, and fault currents.

Setting	• 4 ... 20 mA NAMUR • 4 ... 20 mA US
Default	4 ... 20 mA NAMUR

"0 ... 20 mA" cannot be set via HART communication.

Active operation (2.4.1.3)

Displays whether channel can be actively operated. Wiring of channel determines active or passive operation.

Process value (2.4.1.4)

Sets the process value assigned to the output.

Setting	• Level (point 1) • Space (point 1) • Distance (point 1) • Head (point 1) • Volume (point 1) • Volume flow (point 1) • Sensor temperature (point 1) • Level difference • Level average	• Level (point 2) • Space (point 2) • Distance (point 2) • Head (point 2) • Volume (point 2) • Volume flow (point 2) • Sensor temperature (point 2)
Default	Level (point 1)	

Upper range value (2.4.1.6)

Sets process value that corresponds to 20 mA loop current.

Setting	-9999999 ... 9999999
Default	6 m

Lower range value (2.4.1.7)

Sets process value that corresponds to 0/4 mA loop current.

Setting	-9999999 ... 9999999
Default	0 m

Damping value (2.4.1.8)

Used in the damping (filtering) of process values to smooth out response to sudden changes in measurement. Sets time after which output signal reaches 63% of final value.

An increase of damping increases response time of device, and affects digital value and loop current. If output values are noisy, increase parameter "Damping value". For faster response time, decrease parameter "Damping value". Find a value that meets requirements of signal stability and response time.

Setting	0.0 ... 100.0
Default	0.0 s

Fail-safe behavior (2.4.1.9)

Sets behavior in case of a fail-safe state.

Setting	• Lower fault current • Upper fault current • Last reliable value • Current value • Fail-safe value
Default	Lower fault current

Fail-safe activation condition (2.4.1.10)

Sets condition that causes fail-safe behavior to be activated.

Setting	• Selected process value faulty • Failure
Default	Failure

Fail-safe behavior suppression time (2.4.1.11)

Used to hold the process value on this output for the set time in the event of a fail-safe state. If the state is present beyond the set time, the output switches to the defined fail-safe behavior.

Setting	0 ... 300
Default	0 s

Fail-safe behavior minimum duration (2.4.1.12)

Sets minimum time of fail-safe behavior. This prolongs fail-safe behavior in case of a short-term fail-safe state.

Setting	0 ... 100
Default	0 s

Fail-safe value (2.4.1.13)

Sets loop current value used when parameter "Fail-safe behavior" is set to "Fail-safe value".

Setting	0 ... 25
Default	3.5 mA

Forced value (2.4.1.14)

Sets specific loop current used when output is forced.

Setting	3.5 ... 25
Default	4.0 mA

Enable diagnostics (2.4.1.15)

Enables/disables output diagnostics.

Setting	[X] 153 CH1 loop current in lower saturation [X] 154 CH1 loop current in upper saturation [ ] 155 CH1 loop current error [ ] 158 CH1 cable break
Default	[X] indicates enabled by default [ ] indicates disabled by default

9.2.4.2 Current output 1 (2.4.2)

Loop current scale (2.4.2.2)

Sets nominal range of current output, saturation limits, and fault currents.

Setting	• 4...20 mA NAMUR • 4...20 mA US • 4...20 mA (fault=0 mA) • 0...20 mA
Default	4...20 mA NAMUR

Process value (2.4.2.4)

Sets the process value assigned to the output.

Setting	• Level (point 1) • Space (point 1) • Distance (point 1) • Head (point 1) • Volume (point 1) • Volume flow (point 1) • Sensor temperature (point 1) • Level difference • Level average	• Level (point 2) • Space (point 2) • Distance (point 2) • Head (point 2) • Volume (point 2) • Volume flow (point 2) • Sensor temperature (point 2)
Default	Level (point 1)	

Upper range value (2.4.2.6)

Sets process value that corresponds to 20 mA loop current.

Setting	-9999999 ... 9999999
Default	6 m

Lower range value (2.4.2.7)

Sets process value that corresponds to 0/4 mA loop current.

Setting	-9999999 ... 9999999
Default	0 m

Damping value (2.4.2.8)

Used in the damping (filtering) of process values to smooth out response to sudden changes in measurement. Sets time after which output signal reaches 63% of final value.

An increase of damping increases response time of device, and affects digital value and loop current. If output values are noisy, increase parameter "Damping value". For faster response time, decrease parameter "Damping value". Find a value that meets requirements of signal stability and response time.

Setting	0.0 ... 100.0
Default	0.0 s

Fail-safe behavior (2.4.2.9)

Sets behavior in case of a fail-safe state.

Setting	• Lower fault current • Upper fault current • Last reliable value • Current value • Fail-safe value
Default	Lower fault current

Fail-safe behavior activation condition (2.4.2.10)

Sets condition that causes fail-safe behavior to be activated.

Setting	• Selected process value faulty • Failure
Default	Selected process value faulty

Fail-safe behavior suppression time (2.4.2.11)

Used to hold the process value on this output for the set time in the event of a fail-safe state. If the state is present beyond the set time, the output switches to the defined fail-safe behavior.

Setting	0 ... 300
Default	0 s

Fail-safe behavior minimum duration (2.4.2.12)

Sets minimum time of fail-safe behavior. This prolongs fail-safe behavior in case of a short-term fail-safe state.

Setting	0 ... 100
Default	0 s

Fail-safe value (2.4.2.13)

Sets loop current value used when parameter "Fail-safe behavior" is set to "Fail-safe value".

Setting	0 ... 25
Default	3.5 mA

Forced value (2.4.2.14)

Sets specific loop current used when output is forced.

Setting	3.5 ... 25
Default	4.0 mA

Enable diagnostics (2.4.2.15)

Enables/disables output diagnostics.

Setting	[X] 195 Loop current in lower saturation [X] 196 Loop current in upper saturation
Default	[X] indicates enabled by default [ ] indicates disabled by default

9.2.4.3 Current output 2 (2.4.3)

Note

Parameters for "Current output 2"

Parameters for "Current output 2" are the same as those listed previously (for "Current output 1": 2.4.2.).

Specific diagnostic codes are available here: Fault codes and corrective actions (Page 364).

For a complete list of parameters see HMI menu structure (Page 478).

9.2.4.4 Digital input 1 (2.4.4)

Input function (2.4.4.1)

Sets the signal input functionality.

Setting	• None • Reset totalizer 1 • Reset totalizer 2 • Reset totalizer 3 • Reset totalizer 4 • Reset all totalizers • Pause/resume totalizer 1 • Pause/resume totalizer 2 • Pause/resume totalizer 3 • Pause/resume totalizer 4 • Force outputs • Freeze process values • Acknowledge diagnostics
Default	None

"Acknowledge diagnostics" setting is only visible when diagnostics are set to "Manual" in parameter Acknowledge mode (3.2.4) (Page 293).

Parameter will appear with a setting of "Application setup" when it is detected that the digital input is assigned to an application related function, such as a sensor override. If setting is changed, ensure other parameters related to the application are adjusted accordingly.

Polarity (2.4.4.2)

Defines the level corresponding to the active input signal.

Setting	• Active high level • Active low level
Default	Active high level

9.2.4.5 Digital input 2 (2.4.5)

Note

Parameters for "Digital input 2"

Parameters for "Digital input 2" are the same as those listed previously (for "Digital input 1": 2.4.4.).

For a complete list of parameters see HMI menu structure (Page 478).

9.2.4.6 Relay output 1 (2.4.6)

Mode (2.4.6.1)

Sets the relay output functionality.

Setting	• Disabled • Status signals • Alarms and diagnostics • External totalizer • External sampler • Elapsed time
Default	Disabled

If the relay has been configured for an application, "Application setup" will appear. Otherwise, select from the settings list.

Status signals (2.4.6.2)

Enables one or more status signals that change the output signal, if any of the selected status signals appear.

Setting	[ ] Failure [ ] Function check [ ] Out of specification [ ] Maintenance required	This list appears when parameter "Status signal mode" (3.2.6) set to "NAMUR"
	[ ] Maintenance alarm [ ] Function check [ ] Process value alarm [ ] Process value warning [ ] Maintenance demanded [ ] Maintenance required	This list appears when parameter "Status signal mode" (3.2.6) set to "SIMATIC PCS 7" (default)
Default	[X] indicates enabled by default [ ] indicates disabled by default	

Sensor diagnostics (2.4.6.3)

Measurement point 1 (2.4.6.3.1)

Enables one or more diagnostics that change the output signal, if any of the selected diagnostics appear.

Setting	[ ] 0 Sensor not found [ ] 1 Sensor not supported [ ] 2 Invalid device configuration [ ] 3 Communication error [ ] 4 Sensor security lock error [ ] 5 Invalid pump configuration [ ] 6 Low level cut-off active [ ] 7 Sensor override active [ ] 8 Filling too quickly [ ] 9 Emptying too quickly [ ] 10 Sensor has changed [ ] 11 Sensor input not calibrated [ ] 12 Loss of echo [ ] 13 Internal error in sensor [ ] 14 Sensor failure [ ] 15 Invalid primary measuring device configuration [ ] 16 Sensor type mismatch [ ] 17 Invalid application configuration [ ] 18 Sensor input mode changed [ ] 19 Sensor failure [ ] 20 One or more process values with bad status [ ] 21 Spill condition has been reached or is imminent [ ] 64 Maintenance required [ ] 65 Maintenance demanded [ ] 66 Echo profile storage memory is full [ ] 67 Volume could not be calculated
Default	[X] indicates enabled by default [ ] indicates disabled by default

Measurement point 2 (2.4.6.3.2)

Enables one or more diagnostics that change the output signal, if any of the selected diagnostics appear.

Setting	[ ] 22 Sensor not found [ ] 23 Sensor not supported [ ] 24 Invalid device configuration [ ] 25 Communication error [ ] 26 Sensor security lock error [ ] 27 Invalid pump configuration [ ] 28 Low level cut-off active [ ] 29 Sensor override active [ ] 30 Filling too quickly [ ] 31 Emptying too quickly [ ] 32 Sensor has changed [ ] 33 Sensor input not calibrated [ ] 34 Loss of echo [ ] 35 Internal error in sensor [ ] 36 Sensor failure [ ] 37 Invalid primary measuring device configuration [ ] 38 Sensor type mismatch [ ] 39 Invalid application configuration [ ] 40 Sensor input mode changed [ ] 41 Sensor failure [ ] 42 One or more process values with bad status [ ] 43 Spill condition has been reached or is imminent [ ] 74 Maintenance required [ ] 75 Maintenance demanded [ ] 76 Echo profile storage memory is full [ ] 77 Volume could not be calculatedd
Default	[X] indicates enabled by default [ ] indicates disabled by default

Process alarms (2.4.6.4)

Level (point 1) (2.4.6.4.1)

Enables one or more diagnostics that change the output signal, if any of the selected diagnostics appear.

Setting	[ ] 320 Level (point 1) above alarm limit [ ] 321 Level (point 1) above warning limit [ ] 322 Level (point 1) below warning limit [ ] 323 Level (point 1) below alarm limit [ ] 384 Level (point 1) out-of-bounds alarm [ ] 385 Level (point 1) in-bounds alarm
Default	[X] indicates enabled by default [ ] indicates disabled by default

Space (point 1) (2.4.6.4.2)

Enables one or more diagnostics that change the output signal, if any of the selected diagnostics appear.

Setting	[ ] 324 Space (point 1) above alarm limit [ ] 325 Space (point 1) above warning limit [ ] 326 Space (point 1) below warning limit [ ] 327 Space (point 1) below alarm limit
Default	[X] indicates enabled by default [ ] indicates disabled by default

Distance (point 1) (2.4.6.4.3)

Enables one or more diagnostics that change the output signal, if any of the selected diagnostics appear.

Setting	[ ] 328 Distance (point 1) above alarm limit [ ] 329 Distance (point 1) above warning limit [ ] 330 Distance (point 1) below warning limit [ ] 331 Distance (point 1) below alarm limit
Default	[X] indicates enabled by default [ ] indicates disabled by default

Head (point 1) (2.4.6.4.4)

Enables one or more diagnostics that change the output signal, if any of the selected diagnostics appear.

Setting	[ ] 336 Head (point 1) above alarm limit [ ] 337 Head (point 1) above warning limit [ ] 338 Head (point 1) below warning limit [ ] 339 Head (point 1) below alarm limit
Default	[X] indicates enabled by default [ ] indicates disabled by default

Volume (point 1) (2.4.6.4.5)

Enables one or more diagnostics that change the output signal, if any of the selected diagnostics appear.

Setting	[ ] 332 Volume (point 1) above alarm limit [ ] 333 Volume (point 1) above warning limit [ ] 334 Volume (point 1) below warning limit [ ] 335 Volume (point 1) below alarm limit
Default	[X] indicates enabled by default [ ] indicates disabled by default

Volume flow (point 1) (2.4.6.4.6)

Enables one or more diagnostics that change the output signal, if any of the selected diagnostics appear.

Setting	[ ] 100 Volume flow (point 1) above alarm limit [ ] 101 Volume flow (point 1) above warning limit [ ] 102 Volume flow (point 1) below warning limit [ ] 103 Volume flow (point 1) below alarm limit
Default	[X] indicates enabled by default [ ] indicates disabled by default

Sensor temperature (point 1) (2.4.6.4.7)

Enables one or more diagnostics that change the output signal, if any of the selected diagnostics appear.

Setting	[ ] 108 Sensor temperature (point 1) above alarm limit [ ] 109 Sensor temperature (point 1) above warning limit [ ] 110 Sensor temperature (point 1) below warning limit [ ] 111 Sensor temperature (point 1) below alarm limit
Default	[X] indicates enabled by default [ ] indicates disabled by default

Level (point 2) (2.4.6.4.8)

Enables one or more diagnostics that change the output signal, if any of the selected diagnostics appear.

Setting	[ ] 340 Level (point 2) above alarm limit [ ] 341 Level (point 2) above warning limit [ ] 342 Level (point 2) below warning limit [ ] 343 Level (point 2) below alarm limit [ ] 386 Level (point 2) out-of-bounds alarm [ ] 387 Level (point 2) in-bounds alarm
Default	[X] indicates enabled by default [ ] indicates disabled by default

Space (point 2) (2.4.6.4.9)

Enables one or more diagnostics that change the output signal, if any of the selected diagnostics appear.

Setting	[ ] 344 Space (point 2) above alarm limit [ ] 345 Space (point 2) above warning limit [ ] 346 Space (point 2) below warning limit [ ] 347 Space (point 2) below alarm limit
Default	[X] indicates enabled by default [ ] indicates disabled by default

Distance (point 2) (2.4.6.4.10)

Enables one or more diagnostics that change the output signal, if any of the selected diagnostics appear.

Setting	[ ] 348 Distance (point 2) above alarm limit [ ] 349 Distance (point 2) above warning limit [ ] 350 Distance (point 2) below warning limit [ ] 351 Distance (point 2) below alarm limit
Default	[X] indicates enabled by default [ ] indicates disabled by default

Head (point 2) (2.4.6.4.11)

Enables one or more diagnostics that change the output signal, if any of the selected diagnostics appear.

Setting	[ ] 356 Head (point 2) above alarm limit [ ] 357 Head (point 2) above warning limit [ ] 358 Head (point 2) below warning limit [ ] 359 Head (point 2) below alarm limit
Default	[X] indicates enabled by default [ ] indicates disabled by default

Volume (point 2) (2.4.6.4.12)

Enables one or more diagnostics that change the output signal, if any of the selected diagnostics appear.

Setting	[ ] 352 Volume (point 2) above alarm limit [ ] 353 Volume (point 2) above warning limit [ ] 354 Volume (point 2) below warning limit [ ] 355 Volume (point 2) below alarm limit
Default	[X] indicates enabled by default [ ] indicates disabled by default

Volume flow (point 2) (2.4.6.4.13)

Enables one or more diagnostics that change the output signal, if any of the selected diagnostics appear.

Setting	[ ] 360 Volume flow (point 2) above alarm limit [ ] 361 Volume flow (point 2) above warning limit [ ] 362 Volume flow (point 2) below warning limit [ ] 363 Volume flow (point 2) below alarm limit
Default	[X] indicates enabled by default [ ] indicates disabled by default

Sensor temperature (point 2) (2.4.6.4.14)

Enables one or more diagnostics that change the output signal, if any of the selected diagnostics appear.

Setting	[ ] 364 Sensor temperature (point 2) above alarm limit [ ] 365 Sensor temperature (point 2) above warning limit [ ] 366 Sensor temperature (point 2) below warning limit [ ] 367 Sensor temperature (point 2) below alarm limit
Default	[X] indicates enabled by default [ ] indicates disabled by default

Level difference (2.4.6.4.15)

Enables one or more diagnostics that change the output signal, if any of the selected diagnostics appear.

Setting	[ ] 368 Level difference above alarm limit [ ] 369 Level difference above warning limit [ ] 370 Level difference below warning limit [ ] 371 Level difference below alarm limit
Default	[X] indicates enabled by default [ ] indicates disabled by default

Level average (2.4.6.4.16)

Enables one or more diagnostics that change the output signal, if any of the selected diagnostics appear.

Setting	[ ] 372 Level average above alarm limit [ ] 373 Level average above warning limit [ ] 374 Level average below warning limit [ ] 375 Level average below alarm limit
Default	[X] indicates enabled by default [ ] indicates disabled by default

Totalizer alarms (2.4.6.5)

Totalizer 1 (2.4.6.5.1)

Enables one or more diagnostics that change the output signal, if any of the selected diagnostics appear.

Setting	[ ] 136 Totalizer 1 above alarm limit [ ] 137 Totalizer 1 above warning limit [ ] 138 Totalizer 1 below warning limit [ ] 139 Totalizer 1 below alarm limit
Default	[X] indicates enabled by default [ ] indicates disabled by default

Totalizer 2 (2.4.6.5.2)

Enables one or more diagnostics that change the output signal, if any of the selected diagnostics appear.

Setting	[ ] 140 Totalizer 2 above alarm limit [ ] 141 Totalizer 2 above warning limit [ ] 142 Totalizer 2 below warning limit [ ] 143 Totalizer 2 below alarm limit
Default	[X] indicates enabled by default [ ] indicates disabled by default

Totalizer 3 (2.4.6.5.3)

Enables one or more diagnostics that change the output signal, if any of the selected diagnostics appear.

Setting	[ ] 144 Totalizer 3 above alarm limit [ ] 145 Totalizer 3 above warning limit [ ] 146 Totalizer 3 below warning limit [ ] 147 Totalizer 3 below alarm limit
Default	[X] indicates enabled by default [ ] indicates disabled by default

Totalizer 4 (2.4.6.5.4)

Enables one or more diagnostics that change the output signal, if any of the selected diagnostics appear.

Setting	[ ] 316 Totalizer 4 above alarm limit [ ] 317 Totalizer 4 above warning limit [ ] 318 Totalizer 4 below warning limit [ ] 319 Totalizer 4 below alarm limit
Default	[X] indicates enabled by default [ ] indicates disabled by default

Input and output diagnostics (2.4.6.6)

Current output (HART) (2.4.6.6.1)

Enables one or more diagnostics that change the output signal, if any of the selected diagnostics appear.

Setting	[ ] 153 CH1 loop current in lower saturation [ ] 154 CH1 loop current in upper saturation [ ] 155 CH1 loop current error [ ] 158 CH1 cable break
Default	[X] indicates enabled by default [ ] indicates disabled by default

Current output 1 (2.4.6.6.2)

Enables one or more diagnostics that change the output signal, if any of the selected diagnostics appear.

Setting	[ ] 195 Loop current in lower saturation [ ] 196 Loop current in upper saturation
Default	[X] indicates enabled by default [ ] indicates disabled by default

Current output 2 (2.4.6.6.3)

Enables one or more diagnostics that change the output signal, if any of the selected diagnostics appear.

Setting	[ ] 201 Loop current in lower saturation [ ] 202 Loop current in upper saturation
Default	[X] indicates enabled by default [ ] indicates disabled by default

Memory card diagnostics (2.4.6.7)

Data logging (2.4.6.7.1)

Enables one or more diagnostics that change the output signal, if any of the selected diagnostics appear.

Setting	[ ] 285 Data logging, < 30 days remaining [ ] 286 Data logging, < 7 days remaining [ ] 287 Data logging memory full
Default	[X] indicates enabled by default [ ] indicates disabled by default

Process value (2.4.6.8)

Sets the process value for the external totalizer or sampler.

Setting	• Volume flow (point 1) • Volume flow (point 2) • Pumped volume (point 1) • Pumped volume (point 2)
Default	Volume flow (point 1)

Units (2.4.6.9)

Sets the unit to be applied for the local operation. It is not used for the communication interface.

Setting	• l (liters) • hl (hectoliters) • m^3 (cubic meters) • gal (US gallons) • gal (UK) (imperial gallons) • bbl (US) (31.5 gallon barrels) • bbl-beer (31 US gallon barrels)	• bbl (42 US gallon barrels) • in^3 (cubic inches) • ft^3 (cubic feet) • yd^3 (cubic yards) • bu (bushels) • Custom
Default	l (liters)	

Amount (2.4.6.10)

Sets the totalized volume that generates a relay contact.

Setting	-9999999 ... 9999999
Default	1000 liters

Interval (2.4.6.11)

Sets time interval that generates a relay contact.

Setting	hhhh: 0 ... 999 mm: 0 ... 59
Default	1 h

Fail-safe behavior (2.4.6.12)

Sets behavior in case of a fail-safe state.

These settings are visible when the relay is configured for mode "Status signals", "Alarms and diagnostics", or "Application setup".

Setting	• Disabled • Hold last state • Energized • De-energized
Default	Disabled

These settings are visible when the relay is configured for mode "External totalizer", or "External sampler".

Setting	• Pause counting • Count latest good value
Default	Pause counting

Fail-safe behavior source (2.4.6.13)

Sets source to which fail-safe behavior settings are applied.

Setting	• Measurement point 1 and 2 • Measurement point 1 • Measurement point 2
Default	Measurement point 1 and 2

Polarity (2.4.6.14)

Defines the level of an active output signal.

Setting	• Active high level • Active low level
Default	Active high level

On-delay (2.4.6.15)

Sets the time delay between diagnostic condition and activating the output to ignore transient error conditions.

Parameter "On-delay" is visible only when parameter "Mode" is set to "Status signals" or "Alarms and diagnostics".

Setting	0.0 ... 9999.0
Default	0.0 s

When modifying the value, set it short enough to protect the process but long enough to avoid false alarms.

Off-delay (2.4.6.16)

Sets the time delay between resetting the diagnostic condition and deactivating the output to prolong the output signal.

Setting	0.5 ... 9999.0
Default	0.5 s

When modifying the value, set it short enough to protect the process but long enough to avoid false alarms.

This parameter also sets the relay duration (pulse width) when parameter "Mode" set to "Application setup", "External totalizer", "External sampler", or "Elapsed time".

Forced value (2.4.6.17)

Sets specific loop current used when output is forced.

Setting	• 0 • 1
Default	0

Note

Forced value enforced for all relays

When this parameter is enabled for any one of the six relays, all relays will change state.

9.2.4.7 Relay output 2 (2.4.7) to Relay output 6 (2.4.11)

Note

Parameters for "Relay output 2" to "Relay output 6"

Parameters for "Relay output 2" to "Relay output 6" are the same as those listed previously (for "Relay output 1": 2.4.6.).

Specific diagnostics codes are available here: Fault codes and corrective actions (Page 364).

For a complete list of parameters see HMI menu structure (Page 478).

9.2.5 Application (2.5)

9.2.5.1 Volume (2.5.1)

Vessel shape (2.5.1.1)

Sets vessel shape, and allows device to calculate volume in addition to level.

	Display name/description	Vessel shape	Other parameter settings required
Setting	None	No vessel shape used.	
	Linear vessel	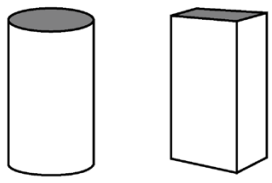	Maximum volume
	Conical bottom vessel	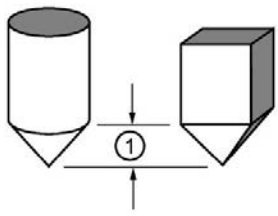	Maximum volume, Vessel dimension A
	Parabolic bottom vessel	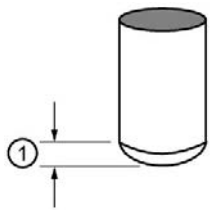	Maximum volume, Vessel dimension A

	Display name/description	Vessel shape	Other parameter settings required
	Half sphere bottom vessel	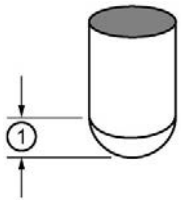	Maximum volume, Vessel dimension A
	Flat sloped bottom vessel	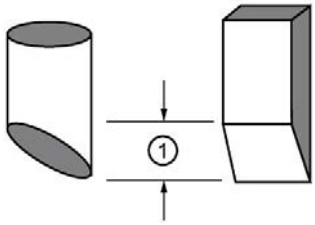	Maximum volume, Vessel dimension A
	Cylinder vessel	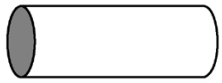	Maximum volume
	Parabolic ends vessel	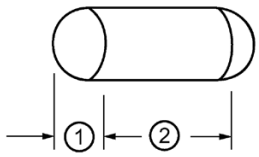	Maximum volume, Vessel dimension A, Vessel dimension L
	Sphere vessel	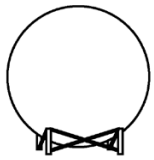	Maximum volume
	Custom	Use for custom volume application.	
Default	None		

① Vessel dimension A ② Vessel dimension L

Maximum volume (2.5.1.2)

Sets the maximum volume of the vessel.

Enter the vessel volume corresponding to the upper calibration point.

Setting	0 ... 99999
Default	0 liters

Vessel dimension A (2.5.1.3)

Sets height of vessel bottom when bottom is conical, parabolic, half spherical, or flat sloped. If horizontal parabolic ends vessel, sets depth of end.

Setting	0 ... 99999
Default	0 m

See Vessel shape (2.5.1.1) (Page 248) for illustration.

Vessel dimension L (2.5.1.4)

Sets length of cylindrical section of horizontal parabolic ends vessel.

Setting	0 ... 99999
Default	0 m

See Vessel shape (2.5.1.1) (Page 248) for illustration.

9.2.5.2 Custom volume table 1 to 16 (2.5.2)

Used to enter level and volume breakpoints for complex vessel shapes in a custom volume application (parameter "Vessel shape" set to "Custom").

For more information, see Volume calculation (Page 417).

X-value 1 (2.5.2.1) to X-value 16 (2.5.2.31)

Sets level breakpoints for which output is known.

Setting	0 ... 9999999
Default	0 m

Y-value 1 (2.5.2.2) to Y-value 16 (2.5.2.32)

Sets output corresponding to each input breakpoint entered.

Setting	0 ... 9999999
Default	0 liters

9.2.5.3 Custom volume table 17 to 32 (2.5.3)

Used to enter level and volume breakpoints for complex vessel shapes in a custom volume application (parameter "Vessel shape" set to "Custom").

For more information, see Volume calculation (Page 417).

X-value 17 (2.5.3.1) to X-value 32 (2.5.3.31)

Sets level breakpoints for which output is known.

Setting	0 ... 9999999
Default	0 m

Y-value 17 (2.5.3.2) to Y-value 32 (2.5.3.32)

Sets output corresponding to each input breakpoint entered.

Setting	0 ... 9999999
Default	0 liters

9.2.5.4 Pump control (2.5.4)

Mode (2.5.4.1)

Sets the control algorithm used to activate the relay.

Setting	• Disabled • Alternate duty assist • Alternate duty backup • Service ratio duty assist • Service ratio duty backup • Fixed duty assist • Fixed duty backup • Single pump
Default	Disabled

Process value (2.5.4.2)

Sets the process value to measure in a pump control application.

Setting	• Level • Level difference • Level average
Default	Level

Enable wall cling reduction (2.5.4.3)

Enables/disables function to reduce material buildup on inner walls of vessel, based on parameter "Wall cling variation".

Setting	• Disabled • Enabled
Default	Disabled

For more information see Reducing wall cling (Page 159).

Wall cling variation (2.5.4.4)

Sets variance of pump on/off setpoints to reduce material buildup on inner walls of vessel.

Setting	0 ... 99999
Default	0 m

Inflow/discharge adjustment (2.5.4.5)

Defines how inflow (or discharge) adjustment is made.

Setting	• None • Based on rate estimation • Based on pump cycle
Default	Based on rate estimation

For more information see Pump totalizers (Page 419).

Enable pump run-on (2.5.4.6)

Enables/disables pump to run on.

For example, enable function to clear sediment from vessel.

Setting	• Disabled • Enabled
Default	Disabled

Pump run-on interval (2.5.4.7)

Sets number of hours between pump run-on occurrences.

Setting	0 ... 1000
Default	0 h

To clear sediment in a pump-down wet well, run the pump after the normal OFF setpoint is reached to force some solid material through. This parameter sets the time between such events. Only the last pump running can run on.

Delay between starts (2.5.4.8)

Sets minimum delay between pump starts.

Setting	0...65535
Default	10 s

Use this feature to reduce a power surge from all pumps starting at the same time. This delay determines when the next pump is permitted to start.

Power resumption delay (2.5.4.9)

Sets minimum delay before first pump restarts after power failure.

Setting	0...65535
Default	60 s

This reduces the power surge from multiple devices starting their pumps immediately on power resumption. When this delay expires, other pumps will start as per parameter "Delay between starts" (2.5.4.8.).

Enable exercise guard (2.5.4.10)

Enables/disables a guard level to be set for pump exercise.

Setting	• Disabled • Enabled
Default	Disabled

Exercise guard level (2.5.4.11)

Sets the level at which a pump exercise cycle will stop, when exercise guard is enabled.

Exercise will not occur if the level is below this setting (pump down application) or above this setting (pump up application).

Setting	-99999 ... 99999
Default	0 m

Pump 1 (2.5.4.12)

Sets relay assigned to pump.

Setting	• None • Relay output 1 • Relay output 2 • Relay output 3 • Relay output 4 • Relay output 5 • Relay output 6
Default	None

On setpoint pump 1 (2.5.4.13)

Sets the level at which pump turns on.

Setting	-99999 ... 99999
Default	0 m

Off setpoint pump 1 (2.5.4.14)

Sets the level at which pump turns off.

Setting	-99999 ... 99999
Default	0 m

Service ratio pump 1 (2.5.4.15)

Sets pump usage based on run time ratio rather than last pump used.

Setting	0 ... 255
Default	1

Run-on duration pump 1 (2.5.4.16)

Sets amount of time that pump will run on.

Setting	0 ... 65535
Default	0 s

Each pump capacity will determine the amount of material that can be removed. Choose a value long enough to clean out the vessel bottom, yet short enough not to run the pump dry. Also be sure that this value does not overlap with parameter "Pump run-on interval" (2.5.4.7.).

Interlock pump 1 (2.5.4.17)

Disables function or enables function by setting digital input to use for pump start interlock.

If enabled, the pump will not start if the corresponding digital input is active.

Setting	• Disabled • Digital input 1 • Digital input 2
Default	Disabled

Enable exercise pump 1 (2.5.4.18)

Enables/disables exercise of pump.

Setting	• Disabled • Enabled
Default	Disabled

Exercise interval pump 1 (2.5.4.19)

Sets number of hours between pump exercise occurrences.

Setting	1 ... 8736
Default	1000 h

Exercise duration pump 1 (2.5.4.20)

Sets amount of time pump will run during exercise.

Setting	0 ... 1440
Default	5 min

Pump 2 (2.5.4.21) to Pump 6 (2.5.4.57)

Note

Parameters for "Pump 2" to "Pump 6"

Parameters for "Pump 2" to "Pump 6" are the same as those listed previously (for "Pump 1": 2.5.4.12 to 2.5.4.20).

For a complete list of parameters see HMI menu structure (Page 478).

9.2.5.5 Pump energy savings (2.5.5)

Enable (2.5.5.1)

Enables/disables the energy savings feature. This feature is used to minimize the pumping that occurs during periods of high energy cost.

Setting	• Disabled • Enabled
Default	Disabled

For more information see Saving energy (Page 159).

Peak lead time (2.5.5.2)

Sets time delay before start time to begin pumping.

Setting	hhhh: 0...99999 mm: 0...59
Default	1 h

This value determines when pumping should start to ensure the level is as far as possible from the ON setpoint of the pump. If level is already within 5% of the OFF setpoint, no action occurs. If multiple pump stations are series linked, ensure the peak lead time entered is sufficient to attain the desired level in all stations before the high-energy cost period occurs.

Peak 1 start time (2.5.5.3)

Sets the start time of the high energy cost period.

Setting	hh: 0...99999 mm: 0...59
Default	0:00

Peak 1 end time (2.5.5.4)

Sets the end time of the high energy cost period.

Setting	hh: 0...99999 mm: 0...59
Default	0:00

<Start and end time parameters for peak periods 2 to 5>

Note

Parameter "Peak 2 start time/end time" to "Peak 5 start time/end time"

Parameters for start and end times of peak periods 2 to 5 are the same as those listed previously (for "Peak 1 start time": 2.5.5.3. and "Peak 1 end time": 2.5.5.4.).

For a complete list of parameters see HMI menu structure (Page 478).

Peak on setpoint pump 1 (2.5.5.13)

Sets the process point at which pump will turn on when in a peak period.

Setting	-99999 ... 99999
Default	0 m

Peak off setpoint pump 1 (2.5.5.14)

Sets the process point at which pump will turn off when in a peak period.

Setting	-99999 ... 99999
Default	0 m

<Peak on/off setpoint parameters for pump 2 to 6>

Note

Parameters for peak on/off setpoints

Parameters for peak on/off setpoints for pumps 2 to 6 are the same as those listed previously (for pump 1 - "Peak on setpoint pump 1": 2.5.5.13. and "Peak off setpoint pump 1": 2.5.5.14.).

For a complete list of parameters see HMI menu structure (Page 478).

9.2.5.6 Volume flow (2.5.6)

Primary measuring device (PMD) (2.5.6.1)

Sets the type of primary measuring device (PMD) used.

Setting	• None • Exponential devices • Rectangular flume BS 3680/ISO 4373 • Round nose horizontal crest weir BS 3680/ISO 4373 • Trapezoidal flume BS 3680/ISO 4373 • U-flume BS 3680/ISO 4373 • Finite crest weir BS 3680/ISO 4373 • Thin plate rectangular weir BS 3680/ISO 4373 • Thin plate V-notch weir BS 3680/ISO 4373 • Rectangular weir contracted • Round pipe • Palmer-Bowlus flume • H-flume • Custom
Default	None

If PMD is not listed, set to "Custom" and use a volume flow calculation. See Volume flow calculation (Page 420).

Dimensions reference table

In addition to the common parameters required for all volume flow applications, the following table is a list of required parameters that are specific to each PMD.

Supported PMD	Dimensions required
Exponential devices	
	Flow exponent (2.5.6.3)
	K-factor (2.5.6.11)
Rectangular flume BS 3680/ISO 4373	
	Approach width (2.5.6.15)
	Throat width (2.5.6.16)
	Hump height (2.5.6.17)
	Throat length (2.5.6.18)
Round nose horizontal crest weir BS 3680/ISO 4373	
	Crest width (2.5.6.15)
	Crest height (2.5.6.16)
	Crest length (2.5.6.17)
Trapezoidal flume BS 3680/ISO 4373	
	Approach width (2.5.6.15)
	Throat width (2.5.6.16)
	Hump height (2.5.6.17)
	Throat length (2.5.6.18)
	Slope (2.5.6.13)

Supported PMD	Dimensions required
U-flume BS 3680/ISO 4373	
	Approach diameter (2.5.6.15)
	Throat diameter (2.5.6.16)
	Hump height (2.5.6.17)
	Throat length (2.5.6.18)
Finite crest weir BS 3680/ISO 4373	
	Crest width (2.5.6.15)
	Crest height (2.5.6.16)
	Crest length (2.5.6.17)
Thin plate rectangular weir BS 3680/ISO 4373	
	Approach width (2.5.6.15)
	Crest width (2.5.6.16)
	Crest height (2.5.6.17)
Thin plate V-notch weir BS 3680/ISO 4373	
	V-notch angle (2.5.6.12)
Rectangular weir contracted	
	Crest width (2.5.6.15)
Round pipe	
	Pipe diameter (2.5.6.15)
	Slope (2.5.6.13)
	Roughness coefficient (2.5.6.14)
Palmer-Bowlus flume	
	Maximum flume width (2.5.6.15)
H-flume	
	Flume height (2.5.6.15)
Custom (2.5.7 and 2.5.8)	
	Volume breakpoints (up to 32)
	Flow breakpoints (up to 32)

Method of flow calculation (2.5.6.2)

Sets method of flow calculation.

Setting	• Absolute • Ratiometric
Default	Absolute

Set this parameter to "Ratiometric" only if the primary measuring device (PMD) supports ratiometric calculations. (Note that Palmer Bowlus Flume and H-Flume support ratiometric calculations only.) For more details on absolute and ratiometric calculations, see Method of flow calculation (Page 422).

Flow exponent (2.5.6.3)

Sets exponent for flow calculation formula.

Setting	-999 ... 9999
Default	1.55

Use if parameter "Primary measuring device" is set to "Exponential devices". The flow exponent is used to create an exponential curve with end points set by maximum flow and zero head, and with the curve based on the specified exponent.

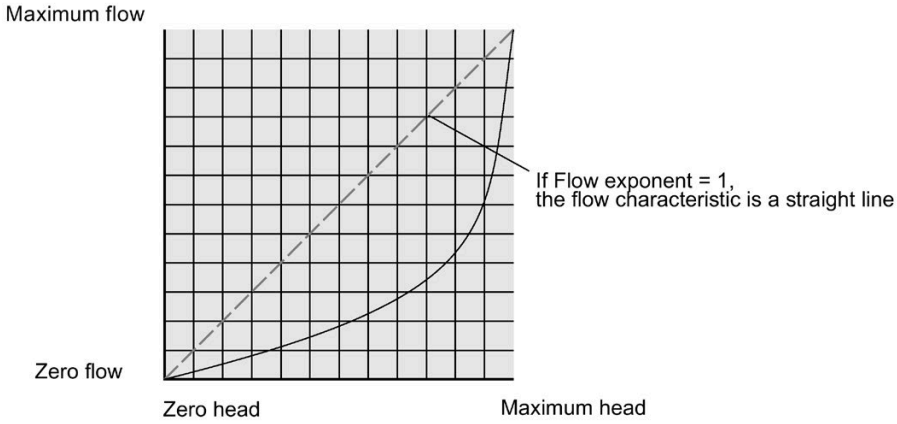

The exponential equation is

$Q = KH^{\text{Flow exponent}}$

Where:

Q = flow

K = constant factor

H = head

Use the exponent specified by the PMD manufacturer, if available, or relevant Open Channel Monitoring reference material.

Maximum head (2.5.6.4)

Sets the maximum head value associated with the PMD and works in conjunction with parameter "Maximum flow" for ratiometric calculations.

Setting	0 ... 9999999
Default	6 m

Maximum flow (2.5.6.5)

Displays current measured maximum flow rate.

Maximum flow (2.5.6.6)

Sets the maximum flowrate associated with value in parameter "Maximum head".

Setting	0 ... 9999999
Default	100 l/s

Zero head offset wizard (2.5.6.7)

Calibrates "Zero head offset" based on actual head measurements.

Use the "Zero head offset wizard" when the reported head is consistently high or low by a fixed amount.

Before using this feature, verify the following parameter is correct:

- Lower calibration point (2.1.6.1) (Page 197)

With a steady head value:

1. Measure the actual head (e.g. with a tape measure or solid rule)
2. Enter the actual head value

The deviation between the entered head value and the calibrated value, is stored in Zero head offset (2.5.6.8) (Page 261).

Actual head

Measure and enter the actual head value.

Zero head offset (2.5.6.8)

Sets the offset between lower level point and zero head.

Setting	0 ... 9999999
Default	0 m

The value for this parameter is set automatically based on the configuration applied in the quick commissioning wizard.

Enable low flow cut-off (2.5.6.9)

Enables/disables low flow cut-off.

Setting	• Disabled • Enabled
Default	Disabled

Low flow cut-off (2.5.6.10)

Sets the flow limit for low flow cut-off. Flow values below this limit are forced to zero.

Setting	0 ... 9999999
Default	0 l/s

K-factor (2.5.6.11)

Sets constant used in volume flow calculation formula, for absolute calculation of exponential device only.

Setting	-999 ... 99999
Default	1

V-notch angle (2.5.6.12)

Sets V-notch angle used in volume flow calculation formula.

Setting	25...95
Default	25

Use when parameter "Primary measuring device" is set to "Thin plate V-notch weir BS 3680/ISO 4373".

Slope (2.5.6.13)

Sets flow slope used in volume flow calculation formula.

Setting	0 ... 1
Default	0

Use when parameter "Primary measuring device" is set to "Trapezoidal flume BS 3680/ISO 4373".

Roughness coefficient (2.5.6.14)

Sets flow roughness coefficient used in volume flow calculation formula.

Setting	-999 ... 9999
Default	0

Use when parameter "Primary measuring device" is set to "Round pipe".

<PMD dimension 1> (2.5.6.15)

Note

PMD dimensions are based on selected PMD

The following parameters share the same parameter number, but are specifically named for the dimension required by the selected PMD.

Choose and set the value for the dimension as required per PMD.

Refer to Primary measuring device (PMD) (2.5.6.1) (Page 258) for a full list of settings per PMD.

Pipe diameter (2.5.6.15)

Setting	0 ... 99999
Default	0 m

Maximum flume width (2.5.6.15)

Setting	0 ... 99999
Default	0 m

Flume height (2.5.6.15)

Setting	0 ... 99999
Default	0 m

Approach width (2.5.6.15)

Setting	0 ... 99999
Default	0 m

Crest width (2.5.6.15)

Setting	0 ... 99999
Default	0 m

Approach diameter (2.5.6.15)

Setting	0 ... 99999
Default	0 m

<PMD dimension 2> (2.5.6.16)

Note

PMD dimensions are based on selected PMD

The following parameters share the same parameter number, but are specifically named for the dimension required by the selected PMD.

Choose and set the value for the dimension as required per PMD.

Refer to Primary measuring device (PMD) (2.5.6.1) (Page 258) for a full list of settings per PMD.

Crest width (2.5.6.16)

Setting	0 ... 99999
Default	0 m

Throat diameter (2.5.6.16)

Setting	0 ... 99999
Default	0 m

Throat width (2.5.6.16)

Setting	0 ... 99999
Default	0 m

Crest height (2.5.6.16)

Setting	0 ... 99999
Default	0 m

<PMD dimension 3> (2.5.6.17)

Note

PMD dimensions are based on selected PMD

The following parameters share the same parameter number, but are specifically named for the dimension required by the selected PMD.

Choose and set the value for the dimension as required per PMD.

Refer to Primary measuring device (PMD) (2.5.6.1) (Page 258) for a full list of settings per PMD.

Crest height (2.5.6.17)

Setting	0 ... 99999
Default	0 m

Crest length (2.5.6.17)

Setting	0 ... 99999
Default	0 m

Hump height (2.5.6.17)

Setting	0 ... 99999
Default	0 m

<PMD dimension 4> (2.5.6.18)

Note

PMD dimensions are based on selected PMD

The following parameters share the same parameter number, but are specifically named for the dimension required by the selected PMD.

Choose and set the value for the dimension as required per PMD.

Refer to Primary measuring device (PMD) (2.5.6.1) (Page 258) for a full list of settings per PMD.

Throat length (2.5.6.18)

Setting	0 ... 99999
Default	0 m

9.2.5.7 Custom flow table 1 to 16 (2.5.7)

Used to enter level and volume flow breakpoints for custom volume flow application (parameter "Primary measuring device" set to "Custom").

For more information, see Volume flow calculation (Page 420).

X-value 1 (2.5.7.1) to X-value 16 (2.5.7.31)

Sets level breakpoints for which output is known.

Setting	0 ... 9999999
Default	0 m

Y-value 1 (2.5.7.2) to Y-value 16 (2.5.7.32)

Sets output corresponding to each input breakpoint entered.

Setting	0 ... 9999999
Default	0 l/s

9.2.5.8 Custom flow table 17 to 32 (2.5.8)

Used to enter level and volume flow breakpoints for custom volume flow application (parameter "Primary measuring device" set to "Custom").

For more information, see Volume flow calculation (Page 420).

X-value 17 (2.5.8.1) to X-value 32 (2.5.8.31)

Sets level breakpoints for which output is known.

Setting	0 ... 9999999
Default	0 m

Y-value 17 (2.5.8.2) to Y-value 32 (2.5.8.32)

Sets output corresponding to each input breakpoint entered.

Setting	0 ... 9999999
Default	0 l/s

9.2.5.9 Time to spill (2.5.9)

Time to spill threshold (2.5.9.1)

Used to activate a diagnostic when the calculated time to spill is less than this value.

A setting of zero disables the diagnostic.

Setting	0 ... 99999
Default	0 min

Level to spill (2.5.9.2)

Sets the spill level for the application.

Setting	-99999 ... 99999
Default	4.5 m

Level threshold (2.5.9.3)

Sets the level below which a time to spill is ignored.

Setting	-99999 ... 99999
Default	3 m

9.2.5.10 Time of day relay (2.5.10)

This function drives a relay based on time of day. The relay toggles on and off at a rate set by the parameters below. This relay is not affected by loss of echo (LOE), faults, alarms, or any other condition within the device.

Assigned relay (2.5.10.1)

Sets the relay assigned to time of day control.

Setting	• None • Relay output 1 • Relay output 2 • Relay output 3 • Relay output 4 • Relay output 5 • Relay output 6
Default	None

Activation time (2.5.10.2)

Sets time of day, using a 24-hour clock, at which the relay should activate.

Setting	hh: 0 ... 99999 mm: 0 ... 59
Default	1:00

Duration (2.5.10.3)

Sets the time in seconds from one change of state in the relay to the next.

Setting	2 ... 9999
Default	10 s

9.2.5.11 Basic control (2.5.11)

Relay output 1 (2.5.11.1)

Control source (2.5.11.1.1)

Sets the control source to be configured for a basic control application.

This step will not appear on a single-point device.

Setting	• Disabled • Level (point 1) • Level (point 2)* • Level difference* • Level average*
Default	Disabled

* Setting visible only with dual-point version.

On setpoint (2.5.11.1.2)

Sets the level at which the relay turns on.

Setting	-99999 ... 99999
Default	0.0 m

Off setpoint (2.5.11.1.3)

Sets the level at which the relay turns off.

Setting	-99999 ... 99999
Default	0.0 m

Relay output 2 (2.5.11.2) to Relay output 6 (2.5.11.6)

Note

Parameters for "Relay output 2" to "Relay output 6"

Parameters for "Relay output 2" to "Relay output 6" are the same as those listed previously (for "Relay output 1": 2.5.11.1).

For a complete list of parameters see HMI menu structure (Page 478).

9.2.5.12 Measurement point 2 (2.5.12)

<Point 2 parameters> (2.5.12.1) to (2.5.12.9)

Note

Parameters for "Measurement point 2"

Parameters for volume, pump, and volume flow applications for point 2 are the same as those listed previously for point 1 (2.5.1) to (2.5.9).

For a complete list of parameters see HMI menu structure (Page 478).

9.2.6 Date and time (2.7)

9.2.6.1 Current date and time (2.7.1)

Displays the current date and time.

9.2.6.2 Set date and time (2.7.2)

Sets the current date in the format YYYY-MM-DD and the time in 24-hour format.

For information on how to use the string editor, see Edit view/Read only view (Page 117).

9.2.7 Local display (2.8)

9.2.7.1 Brightness (2.8.1)

Sets the brightness level on local display.

Setting	• 0 % • 10 % • 20 % • 30 % • 40 % • 50 % • 60 % • 70 % • 80 % • 90 % • 100 %
Default	60 %

9.2.7.2 Backlight (2.8.2)

Sets operation of backlight on local display.

Allows the backlight to be switched off after 10 minutes. Each button press turns on the backlight.

Setting	• Auto • Always on
Default	Always on

The display backlight will turn on with first button press, and turn off 30 seconds after last button press when set to "Auto".

9.2.7.3 Contrast (2.8.3)

Sets contrast level on local display.

Setting	• 0 % • 10 % • 20 % • 30 % • 40 % • 50 % • 60 % • 70 % • 80 % • 90 % • 100 %
Default	50 %

9.2.7.4 Process value damping (2.8.4)

Damping value (2.8.4.1)

Sets the damping (filtering) of the process value on the display only, to smooth out response to sudden changes in measurement.

Setting	0 ... 100
Default	1 s

Process values (2.8.4.2)

Sets the process values to be damped (smoothed) when shown on local display.

Setting	[ ] Volume flow (point 1) [ ] Sensor temperature (point 1) [ ] Level (point 1) [ ] Space (point 1) [ ] Distance (point 1) [ ] Volume (point 1) [ ] Head (point 1) [ ] Level (point 2)	[ ] Space (point 2) [ ] Distance (point 2) [ ] Volume (point 2) [ ] Head (point 2) [ ] Volume flow (point 2) [ ] Sensor temperature (point 2) [ ] Level difference [ ] Level average
Default	[X] indicates enabled by default [ ] indicates disabled by default	

9.2.7.5 View 1 (2.8.5)

Type (2.8.5.1)

Sets the view type to show on local display for respective view.

Setting	• 1 value • 1 value and horizontal bar graph • 1 value, icons and vertical bar graph • 1 value and trend chart • 3 values and horizontal bar graph • 3 values, icons and vertical bar graph • 6 values
Default	1 value

View process value settings

The following is a list of process values that can be set for each value (e.g. "1st value", "2nd value", etc.), under each view (1 to 6):

- Level (point 1)
- Level % (point 1)
- Space (point 1)
- Space % (point 1)
- Distance (point 1)
- Distance % (point 1)
- Head (point 1)
- Volume (point 1)
- Volume % (point 1)
- Sensor temperature (point 1)
- Totalizer 1
- Totalizer 2
- Totalizer 3
- Totalizer 4
- Level (point 2)
- Level % (point 2)
- Space (point 2)
- Space % (point 2)
- Distance (point 2)
- Distance % (point 2)
- Head (point 2)
- Volume (point 2)
- Volume % (point 2)
- Sensor temperature (point 2)
- Level difference
- Level average

Defaults are listed individually per parameters that follow, for each view.

1st value (2.8.5.2)

Sets the process value to show on local display based on number of process values selected in view type.

Setting	See list View process value settings (Page 272)
Default	Level (point1)

2nd value (2.8.5.3)

Sets the process value to show on local display based on number of process values selected in view type.

Setting	See list View process value settings (Page 272)
Default	Distance (point 1)

3rd value (2.8.5.4)

Sets the process value to show on local display based on number of process values selected in view type.

Setting	See list View process value settings (Page 272)
Default	Head (point 1)

4th value (2.8.5.5)

Sets the process value to show on local display based on number of process values selected in view type.

Setting	See list View process value settings (Page 272)
Default	Space (point 1)

5th value (2.8.5.6)

Sets the process value to show on local display based on number of process values selected in view type.

Setting	See list View process value settings (Page 272)
Default	Distance (point 2)

6th value (2.8.5.7)

Sets the process value to show on local display based on number of process values selected in view type.

Setting	See list View process value settings (Page 272)
Default	Head (point 2)

Graph axis scaling mode (2.8.5.8)

Used to define how graph axis is set on local display view.

Setting	• Auto • Fixed
Default	Auto

Graph log time window (2.8.5.9)

Sets time window for last recorded process value on graph.

Setting	• 1 min • 5 min • 15 min • 30 min • 1 h • 2 h • 3 h
Default	5 min

Graph scale upper limit (2.8.5.10)

Sets upper limit of axis for graph on local display view.

Setting	0 ... 9999999
Default	0

Graph scale lower limit (2.8.5.11)

Sets lower limit of axis for graph on local display view.

Setting	0 ... 9999999
Default	0

9.2.7.6 View 2 (2.8.6)

Visibility (2.8.6.1)

Enables/disables the view.

Setting	• Disabled • Enabled
Default	Enabled

Type (2.8.6.2)

Sets the view type to show on local display for respective view.

Setting	• 1 value • 1 value and horizontal bar graph • 1 value, icons and vertical bar graph • 1 value and trend chart • 3 values and horizontal bar graph • 3 values, icons and vertical bar graph • 6 values • Totalizer • Diagnostics
Default	3 values, icons and vertical bar graph

When setting "6 values" is chosen on Views 2 to 6, additional process values can be selected. See View process value settings (Page 275).

View process value settings

The following is a list of process values that can be set for each value (e.g. "1st value", "2nd value", etc.), under each view (1 to 6):

- Level (point 1)
- Level % (point 1)
- Space (point 1)
- Space % (point 1)
- Distance (point 1)
- Distance % (point 1)
- Head (point 1)
- Volume (point 1)
- Volume % (point 1)
- Sensor temperature (point 1)
- Totalizer 1
- Totalizer 2
- Totalizer 3
- Totalizer 4
- Level (point 2)
- Level % (point 2)
- Space (point 2)
- Space % (point 2)
- Distance (point 2)
- Distance % (point 2)
- Head (point 2)
- Volume (point 2)
- Volume % (point 2)
- Sensor temperature (point 2)
- Level difference
- Level average

When parameter "Type" is set to "6 values" on Views 2 to 6, additional process values can be selected:

- Transmitter electronics temperature
- Loop current (HART)
- Current output 1
- Current output 2

Defaults are listed individually per parameters that follow, for each view.

1st value (2.8.6.3)

Sets the process value to show on local display based on number of process values selected in view type.

Setting	See list View process value settings (Page 275)
Default	Level (point1)

2nd value (2.8.6.4)

Sets the process value to show on local display based on number of process values selected in view type.

Setting	See list View process value settings (Page 275)
Default	Space (point 1)

3rd value (2.8.6.5)

Sets the process value to show on local display based on number of process values selected in view type.

Setting	See list View process value settings (Page 275)
Default	Distance (point 1)

4th value (2.8.6.6)

Sets the process value to show on local display based on number of process values selected in view type.

Setting	See list View process value settings (Page 275)
Default	Space (point 1)

5th value (2.8.6.7)

Sets the process value to show on local display based on number of process values selected in view type.

Setting	See list View process value settings (Page 275)
Default	Distance (point 2)

6th value (2.8.6.8)

Sets the process value to show on local display based on number of process values selected in view type.

Setting	See list View process value settings (Page 275)
Default	Head (point 2)

Graph axis scaling mode (2.8.6.9)

Used to define how graph axis is set on local display view.

Setting	• Auto • Fixed
Default	Auto

Graph log time (2.8.6.10)

Sets time window for last recorded process value on graph.

Setting	• 1 min • 5 min • 15 min • 30 min • 1 h • 2 h • 3 h
Default	5 min

Graph scale upper limit (2.8.6.11)

Sets upper limit of axis for graph on local display view.

Setting	0 ... 9999999
Default	0

Graph scale lower limit (2.8.6.12)

Sets lower limit of axis for graph on local display view.

Setting	0 ... 9999999
Default	0

9.2.7.7 View 3 (2.8.7)

Visibility (2.8.7.1)

Enables/disables the view.

Setting	• Disabled • Enabled
Default	Enabled

Type (2.8.7.2)

Sets the view type to show on local display for respective view.

Setting	• 1 value • 1 value and horizontal bar graph • 1 value, icons and vertical bar graph • 1 value and trend chart • 3 values and horizontal bar graph • 3 values, icons and vertical bar graph • 6 values • Totalizer • Diagnostics
Default	1 value

When setting "6 values" is chosen on Views 2 to 6, additional process values can be selected. See View process value settings (Page 278).

View process value settings

The following is a list of process values that can be set for each value (e.g. "1st value", "2nd value", etc.), under each view (1 to 6):

- Level (point 1)
- Level % (point 1)
- Space (point 1)
- Space % (point 1)
- Distance (point 1)
- Distance % (point 1)
- Head (point 1)
- Volume (point 1)
- Volume % (point 1)
- Sensor temperature (point 1)
- Totalizer 1
- Totalizer 2
- Totalizer 3
- Totalizer 4
- Level (point 2)
- Level % (point 2)
- Space (point 2)
- Space % (point 2)
- Distance (point 2)
- Distance % (point 2)
- Head (point 2)
- Volume (point 2)
- Volume % (point 2)
- Sensor temperature (point 2)
- Level difference
- Level average

When parameter "Type" is set to "6 values" on Views 2 to 6, additional process values can be selected:

- Transmitter electronics temperature
- Loop current (HART)
- Current output 1
- Current output 2

Defaults are listed individually per parameters that follow, for each view.

1st value (2.8.7.3)

Sets the process value to show on local display based on number of process values selected in view type.

Setting	See list View process value settings (Page 278)
Default	Level (point 2)

2nd value (2.8.7.4)

Sets the process value to show on local display based on number of process values selected in view type.

Setting	See list View process value settings (Page 278)
Default	Distance (point 1)

3rd value (2.8.7.5)

Sets the process value to show on local display based on number of process values selected in view type.

Setting	See list View process value settings (Page 278)
Default	Level (point 1)

4th value (2.8.7.6)

Sets the process value to show on local display based on number of process values selected in view type.

Setting	See list View process value settings (Page 278)
Default	Space (point 1)

5th value (2.8.7.7)

Sets the process value to show on local display based on number of process values selected in view type.

Setting	See list View process value settings (Page 278)
Default	Distance (point 2)

6th value (2.8.7.8)

Sets the process value to show on local display based on number of process values selected in view type.

Setting	See list View process value settings (Page 278)
Default	Head (point 2)

Graph axis scaling mode (2.8.7.9)

Used to define how graph axis is set on local display view.

Setting	• Auto • Fixed
Default	Auto

Graph log time window (2.8.7.10)

Sets time window for last recorded process value on graph.

Setting	• 1 min • 5 min • 15 min • 30 min • 1 h • 2 h • 3 h
Default	5 min

Graph scale upper limit (2.8.7.11)

Sets upper limit of axis for graph on local display view.

Setting	0 ... 9999999
Default	0

Graph scale lower limit (2.8.7.12)

Sets lower limit of axis for graph on local display view.

Setting	0 ... 9999999
Default	0

9.2.7.8 View 4 (2.8.8)

Visibility (2.8.8.1)

Enables/disables the view.

Setting	• Disabled • Enabled
Default	Enabled

Type (2.8.8.2)

Sets the view type to show on local display for respective view.

Setting	• 1 value • 1 value and horizontal bar graph • 1 value, icons and vertical bar graph • 1 value and trend chart • 3 values and horizontal bar graph • 3 values, icons and vertical bar graph • 6 values • Totalizer • Diagnostics
Default	3 values, icons and vertical bar graph

When setting "6 values" is chosen on Views 2 to 6, additional process values can be selected. See View process value settings (Page 281).

View process value settings

The following is a list of process values that can be set for each value (e.g. "1st value", "2nd value", etc.), under each view (1 to 6):

- Level (point 1)
- Level % (point 1)
- Space (point 1)
- Space % (point 1)
- Distance (point 1)
- Distance % (point 1)
- Head (point 1)
- Volume (point 1)
- Volume % (point 1)
- Sensor temperature (point 1)
- Totalizer 1
- Totalizer 2
- Totalizer 3
- Totalizer 4
- Level (point 2)
- Level % (point 2)
- Space (point 2)
- Space % (point 2)
- Distance (point 2)
- Distance % (point 2)
- Head (point 2)
- Volume (point 2)
- Volume % (point 2)
- Sensor temperature (point 2)
- Level difference
- Level average

When parameter "Type" is set to "6 values" on Views 2 to 6, additional process values can be selected:

- Transmitter electronics temperature
- Loop current (HART)
- Current output 1
- Current output 2

Defaults are listed individually per parameters that follow, for each view.

1st value (2.8.8.3)

Sets the process value to show on local display based on number of process values selected in view type.

Setting	See list View process value settings (Page 281)
Default	Level (point 2)

2nd value (2.8.8.4)

Sets the process value to show on local display based on number of process values selected in view type.

Setting	See list View process value settings (Page 281)
Default	Space (point 2)

3rd value (2.8.8.5)

Sets the process value to show on local display based on number of process values selected in view type.

Setting	See list View process value settings (Page 281)
Default	Distance (point 2)

4th value (2.8.8.6)

Sets the process value to show on local display based on number of process values selected in view type.

Setting	See list View process value settings (Page 281)
Default	Level (point 1)

5th value (2.8.8.7)

Sets the process value to show on local display based on number of process values selected in view type.

Setting	See list View process value settings (Page 281)
Default	Distance (point 2)

6th value (2.8.8.8)

Sets the process value to show on local display based on number of process values selected in view type.

Setting	See list View process value settings (Page 281)
Default	Head (point 2)

Graph axis scaling mode (2.8.8.9)

Used to define how graph axis is set on local display view.

Setting	• Auto • Fixed
Default	Auto

Graph log time window (2.8.8.10)

Sets time window for last recorded process value on graph.

Setting	• 1 min • 5 min • 15 min • 30 min • 1 h • 2 h • 3 h
Default	5 min

Graph scale upper limit (2.8.8.11)

Sets upper limit of axis for graph on local display view.

Setting	0 ... 9999999
Default	0

Graph scale lower limit (2.8.8.12)

Sets lower limit of axis for graph on local display view.

Setting	0 ... 9999999
Default	0

9.2.7.9 View 5 (2.8.9)

Visibility (2.8.9.1)

Enables/disables the view.

Setting	• Disabled • Enabled
Default	Disabled

Type (2.8.9.2)

Sets the view type to show on local display for respective view.

Setting	• 1 value • 1 value and horizontal bar graph • 1 value, icons and vertical bar graph • 1 value and trend chart • 3 values and horizontal bar graph • 3 values, icons and vertical bar graph • 6 values • Totalizer • Diagnostics
Default	3 values and horizontal bar graph

When setting "6 values" is chosen on Views 2 to 6, additional process values can be selected. See View process value settings (Page 284).

View process value settings

The following is a list of process values that can be set for each value (e.g. "1st value", "2nd value", etc.), under each view (1 to 6):

- Level (point 1)
- Level % (point 1)
- Space (point 1)
- Space % (point 1)
- Distance (point 1)
- Distance % (point 1)
- Head (point 1)
- Volume (point 1)
- Volume % (point 1)
- Sensor temperature (point 1)
- Totalizer 1
- Totalizer 2
- Totalizer 3
- Totalizer 4
- Level (point 2)
- Level % (point 2)
- Space (point 2)
- Space % (point 2)
- Distance (point 2)
- Distance % (point 2)
- Head (point 2)
- Volume (point 2)
- Volume % (point 2)
- Sensor temperature (point 2)
- Level difference
- Level average

When parameter "Type" is set to "6 values" on Views 2 to 6, additional process values can be selected:

- Transmitter electronics temperature
- Loop current (HART)
- Current output 1
- Current output 2

Defaults are listed individually per parameters that follow, for each view.

1st value (2.8.9.3)

Sets the process value to show on local display based on number of process values selected in view type.

Setting	See list View process value settings (Page 284)
Default	Distance (point 2)

2nd value (2.8.9.4)

Sets the process value to show on local display based on number of process values selected in view type.

Setting	See list View process value settings (Page 284)
Default	Distance (point 1)

3rd value (2.8.9.5)

Sets the process value to show on local display based on number of process values selected in view type.

Setting	See list View process value settings (Page 284)
Default	Head (point 1)

4th value (2.8.9.6)

Sets the process value to show on local display based on number of process values selected in view type.

Setting	See list View process value settings (Page 284)
Default	Space (point 1)

5th value (2.8.9.7)

Sets the process value to show on local display based on number of process values selected in view type.

Setting	See list View process value settings (Page 284)
Default	Level (point 1)

6th value (2.8.9.8)

Sets the process value to show on local display based on number of process values selected in view type.

Setting	See list View process value settings (Page 284)
Default	Head (point 2)

Graph axis scaling mode (2.8.9.9)

Used to define how graph axis is set on local display view.

Setting	• Auto • Fixed
Default	Auto

Graph log time window (2.8.9.10)

Sets time window for last recorded process value on graph.

Setting	• 1 min • 5 min • 15 min • 30 min • 1 h • 2 h • 3 h
Default	5 min

Graph scale upper limit (2.8.9.11)

Sets upper limit of axis for graph on local display view.

Setting	0 ... 9999999
Default	0

Graph scale lower limit (2.8.9.12)

Sets lower limit of axis for graph on local display view.

Setting	0 ... 9999999
Default	0

9.2.7.10 View 6 (2.8.10)

Visibility (2.8.10.1)

Enables/disables the view.

Setting	• Disabled • Enabled
Default	Enabled

Type (2.8.10.2)

Sets the view type to show on local display for respective view.

Setting	• 1 value • 1 value and horizontal bar graph • 1 value, icons and vertical bar graph • 1 value and trend chart • 3 values and horizontal bar graph • 3 values, icons and vertical bar graph • 6 values • Totalizer • Diagnostics
Default	Diagnostics

When setting "6 values" is chosen on Views 2 to 6, additional process values can be selected. See View process value settings (Page 287).

View process value settings

The following is a list of process values that can be set for each value (e.g. "1st value", "2nd value", etc.), under each view (1 to 6):

- Level (point 1)
- Level % (point 1)
- Space (point 1)
- Space % (point 1)
- Distance (point 1)
- Distance % (point 1)
- Head (point 1)
- Volume (point 1)
- Volume % (point 1)
- Sensor temperature (point 1)
- Totalizer 1
- Totalizer 2
- Totalizer 3
- Totalizer 4
- Level (point 2)
- Level % (point 2)
- Space (point 2)
- Space % (point 2)
- Distance (point 2)
- Distance % (point 2)
- Head (point 2)
- Volume (point 2)
- Volume % (point 2)
- Sensor temperature (point 2)
- Level difference
- Level average

When parameter "Type" is set to "6 values" on Views 2 to 6, additional process values can be selected:

- Transmitter electronics temperature
- Loop current (HART)
- Current output 1
- Current output 2

Defaults are listed individually per parameters that follow, for each view.

1st value (2.8.10.3)

Sets the process value to show on local display based on number of process values selected in view type.

Setting	See list View process value settings (Page 287)
Default	Head (point 2)

2nd value (2.8.10.4)

Sets the process value to show on local display based on number of process values selected in view type.

Setting	See list View process value settings (Page 287)
Default	Distance (point 1)

3rd value (2.8.10.5)

Sets the process value to show on local display based on number of process values selected in view type.

Setting	See list View process value settings (Page 287)
Default	Head (point 1)

4th value (2.8.10.6)

Sets the process value to show on local display based on number of process values selected in view type.

Setting	See list View process value settings (Page 287)
Default	Space (point 1)

5th value (2.8.10.7)

Sets the process value to show on local display based on number of process values selected in view type.

Setting	See list View process value settings (Page 287)
Default	Distance (point 2)

6th value (2.8.10.8)

Sets the process value to show on local display based on number of process values selected in view type.

Setting	See list View process value settings (Page 287)
Default	Level (point 1)

Graph axis scaling mode (2.8.10.9)

Used to define how graph axis is set on local display view.

Setting	• Auto • Fixed
Default	Auto

Graph log time window (2.8.10.10)

Sets time window for last recorded process value on graph.

Setting	• 1 min • 5 min • 15 min • 30 min • 1 h • 2 h • 3 h
Default	5 min

Graph scale upper limit (2.8.10.11)

Sets upper limit of axis for graph on local display view.

Setting	0 ... 9999999
Default	0

Graph scale lower limit (2.8.10.12)

Sets lower limit of axis for graph on local display view.

Setting	0 ... 9999999
Default	0

9.3 Maintenance and diagnostics (3)

9.3.1 Identification (3.1)

9.3.1.1 Time of last modification (3.1.1)

Displays the date and time of the last change to the device settings.

9.3.1.2 Configuration change counter (3.1.2)

Displays number of times device configuration or calibration changed, locally or via engineering system.

Note

Parameter "Long tag (3.1.3)" vs parameter "Tag (3.1.3)"

If a HART communication card is installed, parameter "Long tag" will appear, to be defined.

If any communication card other than HART is installed, or no communication card is installed, parameter "Tag" will appear, to be defined.

9.3.1.3 Long tag (3.1.3)

Defines a unique tag name for device or measurement point. Limited to 32 characters.

9.3.1.4 Tag (3.1.3)

Defines a unique tag name for device or measurement point. Limited to 32 characters.

9.3.1.5 Descriptor (3.1.4)

Defines a unique description for the measuring point. Limited to 16 characters.

9.3.1.6 Message (3.1.5)

Sets unique message for device. Limited to 32 characters.

9.3.1.7 Location (3.1.6)

Defines the installation location of the device or measurement point. Limited to 32 characters.

9.3.1.8 Installation date (3.1.7)

Sets the installation date of the device.

9.3.1.9 Manufacturer (3.1.8)

Displays manufacturer of device.

9.3.1.10 Product name (3.1.9)

Displays product name.

9.3.1.11 Article number (3.1.10)

Displays the article number (MLFB) of the device.

9.3.1.12 Serial number (3.1.11)

Displays unique serial number of device, set by factory.

9.3.1.13 FW version (3.1.12)

Displays version number corresponding to software or firmware embedded in device.

9.3.1.14 HW version (3.1.13)

Displays version number corresponding to electronics hardware of device.

9.3.1.15 Final assembly number (3.1.14)

Sets a number for user to identify the device. It is normally changed when electronics or other device components are upgraded in the field.

9.3.1.16 Local display (3.1.16)

HW version (3.1.16.1)

Displays version number corresponding to local display of device.

FW version (3.1.16.2)

Displays version number corresponding to software or firmware embedded in local display.

Menu structure version (3.1.16.3)

Displays the current version number of the HMI firmware.

9.3.1.17 Communication interface (3.1.17)

HW version (3.1.17.1)

Displays version number corresponding to communication interface of device.

FW version (3.1.17.2)

Displays version number corresponding to software or firmware embedded in communication interface of device.

Serial number (3.1.17.3)

Displays unique serial number of communication card, set by factory.

9.3.1.18 Sensor (3.1.19)

Revision counter (point 1) (3.1.19.1)

Displays number of times device configuration or calibration changed.

Revision counter (point 2) (3.1.19.2)

Displays number of times device configuration or calibration changed.

9.3.2 Diagnostics (3.2)

9.3.2.1 Device status (3.2.1)

Displays the status of the device.

Alarms and diagnostics can be acknowledged here when parameter Acknowledge mode (3.2.4) (Page 293) is set to "Manual".

9.3.2.2 Diagnostic log (3.2.2)

Displays list of logged events.

9.3.2.3 Clear diagnostic log (3.2.3)

Used to clear content of the Diagnostic log.

Setting	• Cancel • Ok
Default	Cancel

9.3.2.4 Acknowledge mode (3.2.4)

Sets the mode how a diagnostic is acknowledged.

In "Manual" mode a diagnostic remains until the cause disappears and is acknowledged by the user. In "Auto" mode a diagnostic remains until the cause disappears.

Setting	• Manual • Auto
Default	Auto

"Manual" setting allows acknowledgement of diagnostics:

- Via digital inputs by setting the digital input voltage. See Input function (2.4.4.1) (Page 235).
- Via diagnostic/alarm view 6 in operation mode.
- Via Device status (3.2.1) (Page 292).

9.3.2.5 Suppression time (3.2.5)

Sets amount of time to suppress a diagnostic. Diagnostic will only display if it remains active at end of suppression time.

Setting	0 ... 300
Default	0 s

9.3.2.6 Status signal mode (3.2.6)

Sets type of status signals used, including icons on local display.

Setting	• SIMATIC PCS 7 • NAMUR
Default	SIMATIC PCS 7

9.3.2.7 LR1xx TVT selection (3.2.8)

Sets the curve displayed on future echo profiles. See menus Echo profile (3.2.9) (Page 294) and Saved echo profiles (3.2.10) (Page 294).

Setting	• TVT • AFES
Default	TVT

This parameter is only visible when a SITRANS LR1xx sensor is connected.

9.3.2.8 Echo profile (3.2.9)

Enable echo profile (3.2.9.1)

Enables/disables echo profiles.

Setting	• Enabled • Disabled
Default	Disabled

A power cycle of the device will set this parameter back to default "Disabled".

Note

Measurement rate affected when profiles enabled

When echo profile is "Enabled", the time required for regular device updates will increase from 1 second to 4 seconds. It is recommended that profiles be disabled when not in use.

Note

Disable profiles on device when requesting from external source

Set parameter "Enable echo profile" to "Disabled" when an echo profile will be requested from an external source; such as a Bluetooth app, or SIMATIC PDM.

Echo profile timeout (3.2.9.2)

Sets the time interval after which "Enable echo profile" is set back to "Disabled". Set to 0 h to disable the timeout.

Setting	0 ... 10000
Default	1 h

View echo profile (3.2.9.3)

Initiates and displays an echo profile.

9.3.2.9 Saved echo profiles (3.2.10)

Enable (3.2.10.1)

Enables/disables function to save echo profiles.

Setting	• Disabled • Enabled
Default	Disabled

Up to 100 echo profiles can be saved per measurement point.

The process to save an echo profile takes approximately one minute to complete.

Behavior at full memory (3.2.10.2)

Sets behavior when memory used to save echo profiles becomes full.

Setting	• Overwrite oldest data and raise diagnostic • Halt and raise diagnostic
Default	Overwrite oldest data and raise diagnostic

Save manually (3.2.10.3)

Used to manually save an echo profile.

A profile can be saved manually even if the storage memory is full and parameter "Behavior at full memory" is set to "Halt and raise diagnostic".

Setting	• Cancel • Ok
Default	Cancel

Save automatically by diagnostics (3.2.10.4)

Sets options that will cause an echo profile to be saved automatically.

Setting	[ ] 6 Low level cut-off active [ ] 7 Sensor override active [ ] 8 Filling too quickly [ ] 9 Emptying too quickly [ ] 12 Loss of echo [ ] 13 Sensor hardware failure (digital) [ ] 14 Sensor failure (digital) [ ] 18 Sensor input mode changed [ ] 19 Sensor failure (analog) [ ] 20 One or more process values with bad status
Default	[X] indicates enabled by default [ ] indicates disabled by default

Save automatically by alarms (3.2.10.5)

Sets options that will cause an echo profile to be saved automatically.

Setting	[ ] 320 Level (point 1) above alarm limit [ ] 321 Level (point 1) above warning limit [ ] 322 Level (point 1) below warning limit [ ] 323 Level (point 1) below alarm limit [ ] 384 Level (point 1) out-of-bounds alarm [ ] 385 Level (point 1) in-bounds alarm [ ] 324 Space (point 1) above alarm limit [ ] 325 Space (point 1) above warning limit [ ] 326 Space (point 1) below warning limit [ ] 327 Space (point 1) below alarm limit [ ] 328 Distance (point 1) above alarm limit [ ] 329 Distance (point 1) above warning limit [ ] 330 Distance (point 1) below warning limit [ ] 331 Distance (point 1) below alarm limit [ ] 332 Volume (point 1) above alarm limit [ ] 333 Volume (point 1) above warning limit [ ] 334 Volume (point 1) below warning limit [ ] 335 Volume (point 1) below alarm limit [ ] 336 Head (point 1) above alarm limit [ ] 337 Head (point 1) above warning limit [ ] 338 Head (point 1) below warning limit [ ] 339 Head (point 1) below alarm limit [ ] 100 Volume flow (point 1) above alarm limit [ ] 101 Volume flow (point 1) above warning limit [ ] 102 Volume flow (point 1) below warning limit [ ] 103 Volume flow (point 1) below alarm limit [ ] 108 Sensor temperature (point 1) above alarm limit [ ] 109 Sensor temperature (point 1) above warning limit [ ] 110 Sensor temperature (point 1) below warning limit [ ] 111 Sensor temperature (point 1) below alarm limit
Default	[X] indicates enabled by default [ ] indicates disabled by default

Save automatically by dual-point alarms (3.2.10.6)

Sets options that will cause an echo profile to be saved automatically.

Setting	[ ] 368 Level difference above alarm limit [ ] 369 Level difference above warning limit [ ] 370 Level difference below warning limit [ ] 371 Level difference below alarm limit [ ] 372 Level average above alarm limit [ ] 373 Level average above warning limit [ ] 374 Level average below warning limit [ ] 375 Level average below alarm limit
Default	[X] indicates enabled by default [ ] indicates disabled by default

Number of saved echo profiles (3.2.10.7)

Displays the number of echo profiles saved.

Delete all saved echo profiles (3.2.10.8)

Used to delete all saved echo profiles.

Setting	• Cancel • Ok
Default	Cancel

View saved echo profile (3.2.10.9)

Used to display a saved echo profile.

9.3.2.10 Echo signal strength (3.2.11)

Displays strength of selected echo, in dB.

9.3.2.11 Confidence (3.2.12)

Displays echo quality: higher values represent better echo quality.

9.3.2.12 Short shot confidence (3.2.13)

Displays short shot echo quality: higher values represent better echo quality.

9.3.2.13 Measurement point 2 (3.2.14)

Echo profile (3.2.14.9)

View echo profile (3.2.14.9.3)

Initiates and displays an echo profile.

Saved echo profiles (3.2.14.10)

Save manually (3.2.14.10.3)

Used to manually save an echo profile.

A profile can be saved manually even if the storage memory is full and parameter "Behavior at full memory" is set to "Halt and raise diagnostic".

Save automatically by diagnostics (3.2.14.10.4)

Sets options that will cause an echo profile to be saved automatically.

Setting	[ ] 6 Low level cut-off active [ ] 7 Sensor override active [ ] 8 Filling too quickly [ ] 9 Emptying too quickly [ ] 12 Loss of echo [ ] 13 Sensor hardware failure (digital) [ ] 14 Sensor failure (digital) [ ] 18 Sensor input mode changed [ ] 19 Sensor failure (analog) [ ] 20 One or more process values with bad status
Default	[X] indicates enabled by default [ ] indicates disabled by default

Save automatically by alarms (3.2.14.10.5)

Sets options that will cause an echo profile to be saved automatically.

Setting	[ ] 320 Level (point 1) above alarm limit [ ] 321 Level (point 1) above warning limit [ ] 322 Level (point 1) below warning limit [ ] 323 Level (point 1) below alarm limit [ ] 384 Level (point 1) out-of-bounds alarm [ ] 385 Level (point 1) in-bounds alarm [ ] 324 Space (point 1) above alarm limit [ ] 325 Space (point 1) above warning limit [ ] 326 Space (point 1) below warning limit [ ] 327 Space (point 1) below alarm limit [ ] 328 Distance (point 1) above alarm limit [ ] 329 Distance (point 1) above warning limit [ ] 330 Distance (point 1) below warning limit [ ] 331 Distance (point 1) below alarm limit [ ] 332 Volume (point 1) above alarm limit [ ] 333 Volume (point 1) above warning limit [ ] 334 Volume (point 1) below warning limit [ ] 335 Volume (point 1) below alarm limit [ ] 336 Head (point 1) above alarm limit [ ] 337 Head (point 1) above warning limit [ ] 338 Head (point 1) below warning limit [ ] 339 Head (point 1) below alarm limit [ ] 100 Volume flow (point 1) above alarm limit [ ] 101 Volume flow (point 1) above warning limit [ ] 102 Volume flow (point 1) below warning limit [ ] 103 Volume flow (point 1) below alarm limit [ ] 108 Sensor temperature (point 1) above alarm limit [ ] 109 Sensor temperature (point 1) above warning limit [ ] 110 Sensor temperature (point 1) below warning limit [ ] 111 Sensor temperature (point 1) below alarm limit
Default	[X] indicates enabled by default [ ] indicates disabled by default

Save automatically by dual-point alarms (3.2.14.10.6)

Sets options that will cause an echo profile to be saved automatically.

Setting	[ ] 368 Level difference above alarm limit [ ] 369 Level difference above warning limit [ ] 370 Level difference below warning limit [ ] 371 Level difference below alarm limit [ ] 372 Level average above alarm limit [ ] 373 Level average above warning limit [ ] 374 Level average below warning limit [ ] 375 Level average below alarm limit
Default	[X] indicates enabled by default [ ] indicates disabled by default

Number of saved echo profiles (3.2.14.10.7)

Displays the number of echo profiles saved.

Delete all saved echo profiles (3.2.14.10.8)

Used to delete all saved echo profiles.

View saved echo profile (3.2.14.10.9)

Used to display a saved echo profile.

Measurement point 2

Note

Confidence and signal strength parameters for "Measurement point 2"

Parameters for point 2 are the same as those listed previously (for point 1: 3.2.11 to 3.2.13).

For a complete list of parameters see HMI menu structure (Page 478).

9.3.3 Maintenance (3.3)

9.3.3.1 Operating time (3.3.1)

Time since last power on (3.3.1.1)

Displays the operating time of device since last power up.

Total runtime (3.3.1.2)

Displays the total operating time of the device.

Total runtime sensor (point 1) (3.3.1.3)

Displays the total operating time of SITRANS Probe LU240 sensor corresponding to measurement point 1.

Total runtime sensor (point 2) (3.3.1.4)

Displays the total operating time of SITRANS Probe LU240 sensor corresponding to measurement point 2.

9.3.3.2 Scheduled maintenance (3.3.2)

Three sets of parameters allow you to monitor the device lifetimes and set up service and calibration schedules, based on operating hours instead of a calendar-based schedule. See Device (3.3.2.1) (Page 302), Service (3.3.2.2) (Page 304), and Calibration (3.3.2.3) (Page 305).

The "Scheduled maintenance" feature is available through HART communications. This information can be integrated into an Asset Management system. For optimal use, we recommend that you use SIMATIC PCS7 Asset Management Software in conjunction with SIMATIC PDM.

Note

Maintenance reminders

- Any active maintenance reminders can be seen in **Diagnostics > Device status**.
- Use parameter "Reset elapsed time" to reset the elapsed time to zero, and clear any active diagnostic alarms.
- Parameters "Elapsed time" and "Remaining time" only update every 60 minutes (based on an internal device clock), thus it may take up to 1 hour to see updated parameter values after a change.

Note

Factory reset

Performing a reset to factory defaults will reset all "Scheduled maintenance" parameters to their factory defaults.

Device (3.3.2.1)

The device tracks itself based on operating time and monitors its predicted life expectancy. Operating time can be modified, elapsed time can be reset, and schedules can be set up for maintenance reminders.

Monitoring (3.3.2.1.1)

Sets operation mode for timer function.

When set to "Disabled" the timer stops. When set to "Only timer on", elapsed time runs but when thresholds are reached no diagnostic message is generated.

Setting	• Disabled • Only timer on • Maintenance required • Maintenance required and demanded
Default	Disabled

First, set values in parameter "Maintenance required" and/or "Maintenance demanded". Then set parameter "Monitoring" to the desired option.

Units (3.3.2.1.2)

Sets units for maintenance parameters.

Sets the unit to be applied for the local operation. It is not used for the communication interface.

Setting	• h (hours) • d (days) • y (years)
Default	d (days)

If time units are changed after device has been in operation, values for parameters "Operating time", "Maintenance required", and "Maintenance demanded" must also be adjusted to reflect the new time units.

Expected lifetime (3.3.2.1.3)

Sets the expected lifetime.

If modified, elapsed time and remaining time will automatically recalculate.

Setting	No limits
Default	3650 d

Elapsed time (3.3.2.1.4)

Displays elapsed time since timer was reset. Parameter "Monitoring" must be enabled.

If value for parameter "Elapsed time" reaches limits set in parameters "Maintenance demanded" or "Maintenance required", a diagnostic message is generated.

Remaining time (3.3.2.1.5)

Displays remaining time of operation.

Maintenance required (3.3.2.1.6)

Sets the maintenance required reminder if the elapsed time is equal to or greater than this value.

Setting	No limits
Default	3560 d

Modify values here as required, then set parameter "Monitoring" to the desired option.

Maintenance demanded (3.3.2.1.7)

Sets the maintenance demanded reminder if the elapsed time is equal to or greater than this value.

Setting	No limits
Default	3620 d

Modify values here as required, then set parameter "Monitoring" to the desired option.

Reset elapsed time (3.3.2.1.8)

Use to reset elapsed time.

Setting	• Cancel • Ok
Default	Cancel

Service (3.3.2.2)

The device tracks time until the next service. Interval to next service can be modified, elapsed time can be reset, and schedules can be set up for maintenance reminders.

Monitoring (3.3.2.2.1)

Sets operation mode for timer function.

When set to "Disabled" the timer stops. When set to "Only timer on", elapsed time runs but when thresholds are reached no diagnostic message is generated.

Setting	• Disabled • Only timer on • Maintenance required • Maintenance required and demanded
Default	Disabled

First, set values in parameter "Maintenance required" and/or "Maintenance demanded". Then set parameter "Monitoring" to the desired option.

Units (3.3.2.2.2)

Sets units for maintenance parameters.

Sets the unit to be applied for the local operation. It is not used for the communication interface.

Setting	• h (hours) • d (days) • y (years)
Default	d (days)

If time units are changed after device has been in operation, values for parameters "Interval", "Maintenance required", and "Maintenance demanded" must also be adjusted to reflect the new time units.

Interval (3.3.2.2.3)

Sets the time between inspections.

If modified, elapsed time and remaining time will automatically recalculate.

Setting	No limits
Default	90 d

Elapsed time (3.3.2.2.4)

Displays elapsed time since timer was reset. Parameter "Monitoring" must be enabled.

If value for parameter "Elapsed time" reaches limits set in parameters "Maintenance demanded" or "Maintenance required", a diagnostic message is generated.

Remaining time (3.3.2.2.5)

Displays remaining time of operation.

Maintenance required (3.3.2.2.6)

Sets the maintenance required reminder if the elapsed time is equal to or greater than this value.

Setting	No limits
Default	83 d

Modify values here as required, then set parameter "Monitoring" to the desired option.

Maintenance demanded (3.3.2.2.7)

Sets the maintenance demanded reminder if the elapsed time is equal to or greater than this value.

Setting	No limits
Default	89 d

Modify values here as required, then set parameter "Monitoring" to the desired option.

Reset elapsed time (3.3.2.2.8)

Use to reset elapsed time.

Setting	• Cancel • Ok
Default	Cancel

Calibration (3.3.2.3)

The device tracks time until the next calibration. Interval to next calibration can be modified, elapsed time can be reset, and schedules can be set up for maintenance reminders.

Note

Parameters for "Calibration"

Scheduled maintenance parameters for "Calibration" are the same as those listed previously for "Service" (3.3.2.2).

For a complete list of parameters see HMI menu structure (Page 478).

9.3.3.3 Service monitoring (3.3.3)

This menu is only visible when logged in with "Expert" access level.

Parameter ID (3.3.3.1)

Sets the Modbus register to view in parameter "Value".

Value (3.3.3.2)

Displays the parameter value for the Modbus register set in "Parameter ID".

9.3.4 Monitoring (3.4)

Displays all device monitored values.

9.3.4.1 Sensor (3.4.1)

Input current (3.4.1.1)

Displays the input current for the monitored sensor.

Minimum temperature (3.4.1.2)

Displays minimum sensor temperature value.

Maximum temperature (3.4.1.3)

Displays maximum sensor temperature value.

Minutes to spill (3.4.1.4)

Displays the calculated time remaining before a spill occurs, when time to spill function is enabled.

The value for this parameter will be '0' when material is spilling, i.e. the material level is above the value in parameter Level to spill (2.5.9.2) (Page 266).

Measurement point 2 (3.4.1.5)

<Point 2 parameters> (3.4.1.5.1) to (3.4.1.5.4)

Note

Parameters for "Measurement point 2"

Parameters for point 2 are the same as those listed previously for point 1 (3.4.1.1) to (3.4.1.4).

For a complete list of parameters see HMI menu structure (Page 478).

9.3.4.2 Process values (3.4.2)

Displays monitored process values.

Level (point 1) (3.4.2.1)

Space (point 1) (3.4.2.2)

Distance (point 1) (3.4.2.3)

Head (point 1) (3.4.2.4)

Volume (point 1) (3.4.2.5)

Volume flow (point 1) (3.4.2.6)

Sensor temperature (point 1) (3.4.2.7)

Level (point 2) (3.4.2.8)

Space (point 2) (3.4.2.9)

Distance (point 2) (3.4.2.10)

Head (point 2) (3.4.2.11)

Volume (point 2) (3.4.2.12)

Volume flow (point 2) (3.4.2 13)

Sensor temperature (point 2) (3.4.2.14)

Level difference (3.4.2.15)

Level average (3.4.2.16)

9.3.4.3 Totalizers (3.4.3)

Totalizer 1 (3.4.3.1)

Totalized amount (3.4.3.1.1)

Displays totalized amount for monitored totalizer.

Auto reset limit (3.4.3.1.2)

Displays the limit for totalizer reset.

This limit can be set per totalizer under the "Setup" menu.

Number of auto resets (3.4.3.1.3)

Displays the number of times the auto reset limit was reached and reset.

Totalizer 2 (3.4.3.2) to Totalizer 4 (3.4.3.4)

Note

Parameters for "Totalizer 2" to "Totalizer 4"

Parameters for "Totalizer 2" to "Totalizer 4" are the same as those listed previously (for "Totalizer 1": 3.4.3.1).

For a complete list of parameters see HMI menu structure (Page 478).

9.3.4.4 Inputs and outputs (3.4.4)

Current output (HART) (3.4.4.1)

Loop current (3.4.4.1.1)

Displays the output current for the monitored loop current.

Diagnostics (3.4.4.1.2)

Displays the active diagnostics for the monitored loop current.

Loop current 1 (3.4.4.2)

Displays the output current for the monitored loop current.

Loop current 2 (3.4.4.3)

Displays the output current for the monitored loop current.

Digital input 1 (3.4.4.4)

Displays the current status of digital input 1.

Digital input 2 (3.4.4.5)

Displays the current status of digital input 2.

Relay output 1 (3.4.4.6)

Displays the current status of relay output 1.

Relay output 2 (3.4.4.7) to Relay output 6 (3.4.4.11)

Note

Parameters for "Relay output 2" to "Relay output 6"

Parameters for "Relay output 2" to "Relay output 6" are the same as those listed previously (for "Relay output 1": 3.4.2.6.).

For a complete list of parameters see HMI menu structure (Page 478).

9.3.4.5 Electronics temperature (3.4.5)

Current value (3.4.5.1)

Displays the current temperature.

Minimum (3.4.5.2)

Displays minimum measured value.

Timestamp at minimum (3.4.5.3)

Displays the date and time when the minimum value was measured.

Maximum (3.4.5.4)

Displays maximum measured value.

Timestamp at maximum (3.4.5.5)

Displays the date and time when the maximum value was measured.

9.3.4.6 Pump control (3.4.6)

Runtime relay 1 (3.4.6.1)

Sets the amount of time a relay has been in operation.

This value is also written by the Pump control wizard, Step: Pump run times.

Setting	hhhh: 0...99999 mm: 0...59
Default	0 h

Runtime relay 2 (3.4.6.2) to Runtime relay 6 (3.4.6.6)

Note

Parameters for "Runtime relay 2" to "Runtime relay 6"

Parameters for "Runtime relay 2" to "Runtime relay 6" are the same as those listed previously (for "Runtime relay 1": 3.4.4.1.).

For a complete list of parameters see HMI menu structure (Page 478).

Last time used relay 1 (3.4.6.7)

Displays the date and time that the corresponding pump relay was last in an active state.

Does not apply to non-pump relays.

Last time used relay 2 (3.4.6.8) to Last time used relay 6 (3.4.6.12)

Note

Parameters for "Last time used relay 2" to "Last time used relay 6"

Parameters for "Last time used relay 2" to "Last time used relay 6" are the same as those listed previously (for "Last time used relay 1": 3.4.6.7).

For a complete list of parameters see HMI menu structure (Page 478).

9.3.5 Peak values (3.5)

9.3.5.1 Peak value 1 (3.5.1)

Process value (3.5.1.1)

Sets the process value monitored as a peak value.

Setting	• None • Level (point 1) • Space (point 1) • Distance (point 1) • Head (point 1) • Volume (point 1) • Volume flow (point 1) • Sensor temperature (point 1)	• Level (point 2) • Space (point 2) • Distance (point 2) • Head (point 2) • Volume (point 2) • Volume flow (point 2) • Sensor temperature (point 2) • Level difference • Level average
Default	None	

When a process value is set, the minimum and maximum peak values are displayed in the parameters that follow, and they are also logged on the memory card.

Minimum (3.5.1.2)

Displays minimum measured value.

Timestamp at minimum (3.5.1.3)

Displays the date and time when the minimum value was measured.

Maximum (3.5.1.4)

Displays maximum measured value.

Timestamp at maximum (3.5.1.5)

Displays the date and time when the maximum value was measured.

Reset (3.5.1.6)

Used to reset the minimum and maximum peak values.

Setting	• Cancel • Ok
Default	Cancel

9.3.5.2 Peak value 2 (3.5.2) to Peak value 4 (3.5.4)

Note

Parameters for "Peak value 2" to "Peak value 4"

Parameters for "Peak value 2" to "Peak value 4" are the same as those listed previously (for "Peak value 1": 3.5.1.).

For a complete list of parameters see HMI menu structure (Page 478).

9.3.6 Memory card (3.7)

9.3.6.1 Installed (3.7.1)

Used to confirm if memory card installed in device, and if it is being used as a mass storage device (MSD).

Memory card includes backup data for device.

Setting	• No • Yes • Used as a mass storage device • Checking memory card...
Default	Not applicable

9.3.6.2 Mass storage device (MSD) (3.7.2)

Auto connection (3.7.2.1)

Enables automatic connection of device as a mass storage device (MSD) when connected to a PC via USB cable.

Setting	• Enabled • Disabled
Default	Enabled

The setting selected applies only when the cable is initially connected to the device.

Note

Parameter changes not stored when MSD option enabled

When MSD is enabled and the device is connected to a PC, parameter changes will not be stored in the parameter backup on the memory card. To prevent this, the MSD should be disabled before making any parameter changes while the unit is connected to a PC.

For more information, see Memory card (Page 182).

Connect/disconnect (3.7.2.2)

Enables/disables MSD function.

Setting	• Yes • No
Default	No

9.3.6.3 Capacity (3.7.3)

Displays total capacity of installed memory card.

9.3.6.4 Free space (3.7.4)

Displays amount of available space remaining on installed memory card.

9.3.6.5 Data logging (3.7.5)

Mode (3.7.5.1)

Sets data logging mode.

Setting	• Instantaneous value • Average value
Default	Instantaneous value

Logging interval (3.7.5.2)

Sets interval in seconds between log entries.

Setting	• 10 ms* • 20 ms* • 100 ms* • 200 ms* • 500 ms* • 1 s • 5 s • 10 s • 15 s • 30 s	• 1 min • 5 min • 15 min • 30 min • 1 h • 2 h • 4 h • 6 h • 12 h • 24 h
Default	5 s	
	* Available with "Expert" access level only	

Process values (3.7.5.3)

Logging value 1 (3.7.5.3.1) to Logging value 9 (3.7.5.3.9)

Sets value to log.

Setting	• None • Level (point 1) • Space (point 1) • Distance (point 1) • Head (point 1) • Volume (point 1) • Sensor temperature (point 1) • Level (point 2) • Space (point 2) • Distance (point 2) • Head (point 2) • Volume (point 2) • Sensor temperature (point 2) • Level difference • Level average • Totalizer 1 • Totalizer 2 • Totalizer 3 • Totalizer 4
Default	None

To edit the logging values, data logging must be disabled.

Advanced logging (3.7.5.4)

This menu is only visible when logged in with "Expert" access level.

Register 1 (3.7.5.4.1) to Register 90 (3.7.5.4.90)

Sets the Modbus register that specifies the parameter to be logged. Only parameters of type float, and type unsigned with a maximum size of 4 bytes can be logged. The value 65535 means register disabled.

Setting	0 ... 65535
Default	65535 (Disabled)

To edit the registers, data logging must be disabled.

Behavior at full memory (3.7.5.5)

Sets behavior when data log memory becomes full.

Setting	• Halt and raise diagnostic • Overwrite oldest data
Default	Halt and raise diagnostic

Enable diagnostics (3.7.5.6)

Enables/disables data logging diagnostics.

Setting	[ ] 285 Data logging, < 30 days remaining [X] 286 Data logging, < 7 days remaining [X] 287 Data logging memory full
Default	[X] indicates enabled by default [ ] indicates disabled by default

Decimal separator (3.7.5.7)

Sets symbol used to mark decimal place on local display.

Setting	• , Comma • . Point
Default	. Point

Enable data logging (3.7.5.8)

Enables/disables data logging.

Setting	• Disabled • Enabled
Default	Disabled

Configure "Process values" (3.7.5.3), and "Advanced logging" (3.7.5.4) before enabling.

9.3.7 Simulation (3.8)

Note

Enable simulation as last step

When simulating process values, or inputs and outputs, set values before enabling the simulation.

For more information, see Simulation process (Page 187).

9.3.7.1 Process values (3.8.1)

Sets the process value to simulate.

Level (point 1) (3.8.1.1)

Simulation mode (3.8.1.1.1)

Enables/disables simulation.

Setting	• Disabled • Fixed • Ramp
Default	Disabled

Simulation value (3.8.1.1.2)

Sets starting value for ramp or fixed simulation.

Setting	0 ... 9999999
Default	0 m

Rate (3.8.1.1.3)

Sets the response rate for simulation of the process value.

Setting	• Slow • Medium • Fast
Default	Slow

Level (point 2) (3.8.1.8)

Simulation mode (3.8.1.8.1)

Enables/disables simulation.

Setting	• Disabled • Fixed • Ramp
Default	Disabled

Simulation value (3.8.1.8.2)

Sets starting value for ramp or fixed simulation.

Setting	0 ... 9999999
Default	0 m

Rate (3.8.1.8.3)

Sets the response rate for simulation of the process value.

Setting	• Slow • Medium • Fast
Default	Slow

9.3.7.2 Totalizers (3.8.2)

Sets the totalizer to simulate.

Totalizer 1 (3.8.2.1)

Simulation mode (3.8.2.1.1)

Enables/disables simulation.

Setting	• Disabled • Enabled
Default	Disabled

Simulation value (3.8.2.1.2)

Sets value to be simulated.

Setting	0 ... 9999999
Default	0.00 liters

Totalizer 2 (3.8.2.2) to Totalizer 4 (3.8.2.4)

Note

Parameters for "Totalizer 2" to "Totalizer 4"

Parameters for "Totalizer 2" to "Totalizer 4" are the same as those listed previously (for "Totalizer 1": 3.8.2.1).

For a complete list of parameters see HMI menu structure (Page 478).

9.3.7.3 Inputs and outputs (3.8.3)

Sets the input/output to simulate.

Current output (HART) (3.8.3.1)

Simulation mode (3.8.3.1.1)

Enables/disables simulation.

Setting	• Disabled • Enabled
Default	Disabled

Simulation value (3.8.3.1.2)

Sets value to be simulated.

Setting	0 ... 25
Default	4.0 mA

Current output 1 (3.8.3.2)

Simulation mode (3.8.3.2.1)

Enables/disables simulation.

Setting	• Disabled • Enabled
Default	Disabled

Simulation value (3.8.3.2.2)

Sets value to be simulated.

Setting	0 ... 25
Default	0 mA

Current output 2 (3.8.3.3)

Note

Parameters for "Current output 2"

Parameters for "Current output 2" are the same as those listed previously (for "Current output 1": 3.8.3.2.).

For a complete list of parameters see HMI menu structure (Page 478).

Digital input 1 (3.8.3.4)

Simulation mode (3.8.3.4.1)

Enables/disables simulation.

Setting	• Disabled • Enabled
Default	Disabled

Simulation mode (3.8.3.4.2)

Sets value to be simulated.

Setting	• 0 • 1
Default	0

Digital input 2 (3.8.3.5)

Note

Parameters for "Digital input 2"

Parameters for "Digital input 2" are the same as those listed previously (for "Digital input 1": 3.8.3.4.).

For a complete list of parameters see HMI menu structure (Page 478).

Relay output 1 (3.8.3.6)

Simulation mode (3.8.3.6.1)

Enables/disables simulation.

Setting	• Disabled • Enabled
Default	Disabled

Simulation value (3.8.3.6.2)

Sets value to be simulated.

Setting	• 0 • 1
Default	0

Relay output 2 (3.8.3.7) to Relay output 6 (3.8.3.11)

Note

Parameters for "Relay output 2" to "Relay output 6"

Parameters for "Relay output 2" to "Relay output 6" are the same as those listed previously (for "Relay output 1": 3.8.3.6.).

For a complete list of parameters see HMI menu structure (Page 478).

9.3.7.4 Alarms and diagnostics (3.8.4)

Sets the alarms and diagnostics to simulate.

Simulation mode (3.8.4.1)

Enables/disables simulation.

Setting	• Disabled • Status signals • Alarms and diagnostics
Default	Disabled

Status signals (3.8.4.2)

Sets status signal to simulate when this option selected in parameter "Simulation mode".

Setting	• Failure • Function check • Out of specification • Maintenance required • None	This list appears when parameter "Status signal mode" (3.2.6) set to "NAMUR"
	• Maintenance alarm • Function check • Process value alarm • Process value warning • Maintenance demanded • Maintenance required • None	This list appears when parameter "Status signal mode" (3.2.6) set to "SIMATIC PCS 7" (default)
Default	None	

Sensor (3.8.4.3)

Sets sensor diagnostics to use in simulation.

Measurement point 1 (3.8.4.3.1)

Setting	[ ] 0 Sensor not found [ ] 1 Sensor not supported [ ] 2 Invalid device configuration [ ] 3 Communication error [ ] 4 Sensor security lock error [ ] 5 Invalid pump configuration [ ] 6 Low level cut-off active [ ] 7 Sensor override active [ ] 8 Filling too quickly [ ] 9 Emptying too quickly [ ] 10 Sensor has changed [ ] 11 Sensor input not calibrated [ ] 12 Loss of echo [ ] 13 Internal error in sensor [ ] 14 Sensor failure [ ] 15 Invalid primary measuring device configuration [ ] 16 Sensor type mismatch [ ] 17 Invalid application configuration [ ] 18 Sensor input mode changed [ ] 19 Sensor failure [ ] 20 One or more process values with bad status [ ] 21 Spill condition has been reached or is imminent [ ] 64 Maintenance required [ ] 65 Maintenance demanded [ ] 66 Echo profile storage memory is full [ ] 67 Volume could not be calculated
Default	[X] indicates enabled by default [ ] indicates disabled by default

Measurement point 2 (3.8.4.3.2)

Setting	[ ] 22 Sensor not found [ ] 23 Sensor not supported [ ] 24 Invalid device configuration [ ] 25 Communication error [ ] 26 Sensor security lock error [ ] 27 Invalid pump configuration [ ] 28 Low level cut-off active [ ] 29 Sensor override active [ ] 30 Filling too quickly [ ] 31 Emptying too quickly [ ] 32 Sensor has changed [ ] 33 Sensor input not calibrated [ ] 34 Loss of echo [ ] 35 Internal error in sensor [ ] 36 Sensor failure [ ] 37 Invalid primary measuring device configuration [ ] 38 Sensor type mismatch [ ] 39 Invalid application configuration [ ] 40 Sensor input mode changed [ ] 41 Sensor failure [ ] 42 One or more process values with bad status [ ] 43 Spill condition has been reached or is imminent [ ] 74 Maintenance required [ ] 75 Maintenance demanded [ ] 76 Echo profile storage memory is full [ ] 77 Volume could not be calculatedd
Default	[X] indicates enabled by default [ ] indicates disabled by default

Process alarms (3.8.4.4)

Sets the process alarms to simulate.

Level (point 1 (3.8.4.4.1)

Setting	[ ] 320 Level (point 1) above alarm limit [ ] 321 Level (point 1) above warning limit [ ] 322 Level (point 1) below warning limit [ ] 323 Level (point 1) below alarm limit [ ] 384 Level (point 1) out-of-bounds alarm [ ] 385 Level (point 1) in-bounds alarm
Default	[X] indicates enabled by default [ ] indicates disabled by default

Space (point 1) (3.8.4.4.2)

Setting	[ ] 324 Space (point 1) above alarm limit [ ] 325 Space (point 1) above warning limit [ ] 326 Space (point 1) below warning limit [ ] 327 Space (point 1) below alarm limit
Default	[X] indicates enabled by default [ ] indicates disabled by default

Distance (point 1) (3.8.4.4.3)

Setting	[ ] 328 Distance (point 1) above alarm limit [ ] 329 Distance (point 1) above warning limit [ ] 330 Distance (point 1) below warning limit [ ] 331 Distance (point 1) below alarm limit
Default	[X] indicates enabled by default [ ] indicates disabled by default

Head (point 1) (3.8.4.4.4)

Setting	[ ] 336 Head (point 1) above alarm limit [ ] 337 Head (point 1) above warning limit [ ] 338 Head (point 1) below warning limit [ ] 339 Head (point 1) below alarm limit
Default	[X] indicates enabled by default [ ] indicates disabled by default

Volume (point 1) (3.8.4.4.5)

Setting	[ ] 332 Volume (point 1) above alarm limit [ ] 333 Volume (point 1) above warning limit [ ] 334 Volume (point 1) below warning limit [ ] 335 Volume (point 1) below alarm limit
Default	[X] indicates enabled by default [ ] indicates disabled by default

Volume flow (point 1) (3.8.4.4.6)

Setting	[ ] 100 Volume flow (point 1) above alarm limit [ ] 101 Volume flow (point 1) above warning limit [ ] 102 Volume flow (point 1) below warning limit [ ] 103 Volume flow (point 1) below alarm limit
Default	[X] indicates enabled by default [ ] indicates disabled by default

Sensor temperature (point 1) (3.8.4.4.7)

Setting	[ ] 108 Sensor temperature (point 1) above alarm limit [ ] 109 Sensor temperature (point 1) above warning limit [ ] 110 Sensor temperature (point 1) below warning limit [ ] 111 Sensor temperature (point 1) below alarm limit
Default	[X] indicates enabled by default [ ] indicates disabled by default

<Point 2 parameters> (3.8.4.4.8) to (3.8.4.4.14)

Note

Process value parameters for point 2

Process value parameters for point 2 are the same as those listed previously (for point 1: 3.8.4.4.1. to 3.8.4.4.7.).

For a complete list of parameters see HMI menu structure (Page 478).

Level difference (3.8.4.4.15)

Setting	[ ] 368 Level difference above alarm limit [ ] 369 Level difference above warning limit [ ] 370 Level difference below warning limit [ ] 371 Level difference below alarm limit
Default	[X] indicates enabled by default [ ] indicates disabled by default

Level average (3.8.4.4.16)

Setting	[ ] 372 Level average above alarm limit [ ] 373 Level average above warning limit [ ] 374 Level average below warning limit [ ] 375 Level average below alarm limit
Default	[X] indicates enabled by default [ ] indicates disabled by default

Totalizer alarms (3.8.4.5)

Sets totalizer alarms to simulate.

Totalizer 1 (3.8.4.5.1)

Setting	[ ] 136 Totalizer 1 above alarm limit [ ] 137 Totalizer 1 above warning limit [ ] 138 Totalizer 1 below warning limit [ ] 139 Totalizer 1 below alarm limit
Default	[X] indicates enabled by default [ ] indicates disabled by default

Totalizer 2 (3.8.4.5.2)

Setting	[ ] 140 Totalizer 2 above alarm limit [ ] 141 Totalizer 2 above warning limit [ ] 142 Totalizer 2 below warning limit [ ] 143 Totalizer 2 below alarm limit
Default	[X] indicates enabled by default [ ] indicates disabled by default

Totalizer 3 (3.8.4.5.3)

Setting	[ ] 144 Totalizer 3 above alarm limit [ ] 145 Totalizer 3 above warning limit [ ] 146 Totalizer 3 below warning limit [ ] 147 Totalizer 3 below alarm limit
Default	[X] indicates enabled by default [ ] indicates disabled by default

Totalizer 4 (3.8.4.5.4)

Setting	[ ] 316 Totalizer 4 above alarm limit [ ] 317 Totalizer 4 above warning limit [ ] 318 Totalizer 4 below warning limit [ ] 319 Totalizer 4 below alarm limit
Default	[X] indicates enabled by default [ ] indicates disabled by default

Inputs and outputs (3.8.4.6)

Sets input and output diagnostics to simulate.

Current output (HART) (3.8.4.6.1)

Setting	[ ] 153 CH1 loop current in lower saturation [ ] 154 CH1 loop current in upper saturation [ ] 155 CH1 loop current error [ ] 158 CH1 cable break
Default	[X] indicates enabled by default [ ] indicates disabled by default

Current output 1 (3.8.4.6.2)

Setting	[ ] 195 Loop current in lower saturation [ ] 196 Loop current in upper saturation
Default	[X] indicates enabled by default [ ] indicates disabled by default

Current output 2 (3.8.4.6.3)

Setting	[ ] 201 Loop current in lower saturation [ ] 202 Loop current in upper saturation
Default	[X] indicates enabled by default [ ] indicates disabled by default

Memory card (3.8.4.7)

Data logging (3.8.4.7.1)

Sets data logging diagnostics to simulate.

Setting	[ ] 285 Data logging, < 30 days remaining [ ] 286 Data logging, < 7 days remaining [ ] 287 Data logging memory full
Default	[X] indicates enabled by default [ ] indicates disabled by default

Device (3.8.4.8)

Sets device diagnostics to use in simulation.

Setting	[ ] 56 Internal error [ ] 57 Internal error [ ] 58 Internal error [ ] 59 Invalid relay configuration [ ] 60 Internal error [ ] 61 Internal error [ ] 62 Internal error [ ] 63 Internal error
Default	[X] indicates enabled by default [ ] indicates disabled by default

9.3.8 Audit trail (3.9)

9.3.8.1 Parameter change log (3.9.1)

Displays list of logged parameter changes. Log shows parameter value before and after the change, the timestamp, and the user interface.

9.3.8.2 Clear parameter change log (3.9.2)

Used to clear content of the Parameter change log.

Setting	• Cancel • Ok
Default	Cancel

9.3.8.3 FW update change log (3.9.3)

Displays list of logged firmware updates.

9.3.8.4 Clear FW update change log (3.9.4)

Used to clear content of the FW update change log.

Setting	• Cancel • Ok
Default	Cancel

9.3.9 Resets (3.11)

Note

Reset the device by restoring the initial configuration

A reset of the device may be performed for various reasons, such as a recommended reset prior to running a commissioning wizard if the device was previously configured for another application.

Such a reset (also referred to as a device reset or master reset) is performed on the LT500 using parameter Restore ordered configuration (3.12.8) (Page 330). The initial device configuration as shipped is restored.

9.3.9.1 Device restart (3.11.1)

Used to restart device without disconnecting power.

Simulation will be terminated. Stored configurations are not reset.

Setting	• Cancel • Ok
Default	Cancel

9.3.9.2 Number of device restarts (3.11.2)

Displays the number of times the device has restarted.

9.3.10 Restore setup (3.12)

Note

Reset the device by restoring the initial configuration

A reset of the device may be performed for various reasons, such as a recommended reset prior to running a commissioning wizard if the device was previously configured for another application.

Such a reset (also referred to as a device reset or master reset) is performed on the LT500 using parameter Restore ordered configuration (3.12.8) (Page 330). The initial device configuration as shipped is restored.

For more information on "Restore setup" parameters, see Copy configuration (Page 183).

9.3.10.1 Create restore point (3.12.1)

Used to create a restore point.

Enter name for restore point then select "Ok". If no name is entered, the default name will be "BACKUP".

9.3.10.2 Restore (3.12.2)

Used to restore a saved restore point.

Select from a list of saved restore points.

9.3.10.3 Delete restore point (3.12.3)

Used to delete a saved restore point.

Select from a list of saved restore points.

9.3.10.4 Restore ordered configuration (3.12.8)

Used to restore device to customer-ordered default settings.

Setting	• Cancel • Ok
Default	Cancel

9.3.10.5 Restore auto saved configuration (3.12.9)

Used to restore device to auto saved settings.

Setting	• Cancel • Ok
Default	Cancel

9.3.11 Firmware update (3.13)

Used to update firmware on the device.

Note

Expert access level

To update the firmware, expert access level is required.

9.4 Communication (4)

9.4.1 HART (4.2)

9.4.1.1 Polling address (SW) (4.2.1)

Sets HART address of device. Address is only valid if DIP switches for address setting on device are set to zero.

Setting	0 ... 63
Default	0

9.4.1.2 Polling address (HW) (4.2.2)

Displays device address set via DIP switches.

9.4.1.3 HART device revision (4.2.3)

Displays the HART device revision used to map the associated device description.

9.4.1.4 Number of response preambles (4.2.4)

Sets preamble length of response telegrams to facilitate the master recognizing the beginning of a telegram.

Setting	5 ... 20
Default	5

9.4.1.5 Dynamic variable mapping (4.2.5)

PV selection (4.2.5.1)

Displays the process value (that corresponds to the loop current) set as the primary variable.

Value set in "Process value" (2.4.1.4).

SV selection (4.2.5.2)

Sets the secondary variable by selecting a process value that corresponds to the loop current.

Setting	• Level (point 1) • Space (point 1) • Distance (point 1) • Head (point 1) • Volume (point 1) • Volume flow (point 1) • Sensor temperature (point 1) • Totalizer 1 • Totalizer 2 • Totalizer 3	• Totalizer 4 • Level difference • Level average • Level (point 2) • Space (point 2) • Distance (point 2) • Head (point 2) • Volume (point 2) • Volume flow (point 2) • Sensor temperature (point 2)
Default	Space (point 1)	

TV selection (4.2.5.3)

Sets the tertiary variable by selecting a process value that corresponds to the loop current.

Setting	• Level (point 1) • Space (point 1) • Distance (point 1) • Head (point 1) • Volume (point 1) • Volume flow (point 1) • Sensor temperature (point 1) • Totalizer 1 • Totalizer 2 • Totalizer 3	• Totalizer 4 • Level difference • Level average • Level (point 2) • Space (point 2) • Distance (point 2) • Head (point 2) • Volume (point 2) • Volume flow (point 2) • Sensor temperature (point 2)
Default	Distance (point 1)	

QV selection (4.2.5.4)

Sets the quaternary variable by selecting a process value that corresponds to the loop current.

Setting	• Level (point 1) • Space (point 1) • Distance (point 1) • Head (point 1) • Volume (point 1) • Volume flow (point 1) • Sensor temperature (point 1) • Totalizer 1 • Totalizer 2 • Totalizer 3	• Totalizer 4 • Level difference • Level average • Level (point 2) • Space (point 2) • Distance (point 2) • Head (point 2) • Volume (point 2) • Volume flow (point 2) • Sensor temperature (point 2)
Default	Sensor temperature (point 1)	

9.4.1.6 Units (4.2.6)

Sets the unit to be applied for the communication interface. It is not used for local operation.

Process values (4.2.6.1)

Level (4.2.6.1.1)

Setting	• m (meters) • cm (centimeters) • mm (millimeters) • ft (feet) • in (inches)
Default	m (meters)

Volume (4.2.6.1.2)

Setting	• l (liters) • hl (hectoliters) • m³ (cubic meters) • gal (US gallons) • gal (UK) (imperial gallons) • bbl (US) (31.5 US gallon barrels) • bbl-beer (31 US gallon barrels)	• bbl (42 US gallon barrels) • in³ (cubic inches) • ft³ (cubic feet) • yd³ (cubic yards) • bu (bushels) • Custom
Default	l (liters)	

Volume flow (4.2.6.1.3)

Setting	• l/s (liters per second) • l/min (liters per minute) • l/h (liters per hour) • m³/s (cubic meters per second) • m³/min (cubic meters per minute) • m³/h (cubic meters per hour) • m³/d (cubic meters per day) • Ml/d (megaliters per day) • gal/s (US gallons per second) • gal/min (US gallons per minute) • gal/h (US gallons per hour) • gal/d (US gallons per day) • bbl-beer/s (31 US gallon barrels per second) • bbl-beer/min (31 US gallon barrels per minute) • bbl-beer/h (31 US gallon barrels per hour)	• bbl-beer/d (31 US gallon barrels per day) • bbl/s (42 US gallon barrels per second) • bbl/min (42 US gallon barrels per minute) • bbl/h (42 US gallon barrels per hour) • bbl/d (42 US gallon barrels per day) • ft³/s (cubic feet per second) • ft³/min (cubic feet per minute) • ft³/h (cubic feet per hour) • ft³/d (cubic feet per day) • gal (UK)/s (imperial gallons per second) • gal (UK)/min (imperial gallons per minute) • gal (UK)/h (imperial gallons per hour) • gal (UK)/d (imperial gallons per day) • Mgal/d (US megagallons per day) • Custom
Default	l/s (liters per second)	

Temperature (4.2.6.1.4)

Setting	• °C (degrees Celsius) • °F (degrees Fahrenheit) • °R (degrees Rankine) • K (Kelvin)
Default	°C (degrees Celsius)

Totalizers (4.2.6.2)

Totalizer 1 (4.2.6.2.1)

Setting	• l (liters) • hl (hectoliters) • m³ (cubic meters) • gal (US gallons) • gal (UK) (imperial gallons) • bbl (US) (31.5 US gallon barrels) • bbl-beer (31 US gallon barrels)	• bbl (42 US gallon barrels) • in³ (cubic inches) • ft³ (cubic feet) • yd³ (cubic yards) • bu (bushels) • Custom
Default	l (liters)	

<Totalizer 2 (4.2.6.2.2) to Totalizer 4 (4.2.6.2.4)>

Note

Parameters for "Totalizer 2" to "Totalizer 4"

Parameters for "Totalizer 2" to "Totalizer 4" are the same as those listed previously (for "Totalizer 1": 4.2.6.2.1).

For a complete list of parameters see HMI menu structure (Page 478).

9.4.1.7 Process value damping (4.2.7)

Damping value (4.2.7.1)

Used in the damping (filtering) of process values to smooth out response to sudden changes in measurement. Sets time after which output signal reaches 63% of final value.

An increase of damping increases response time of device, and affects digital value. If output values are noisy, increase parameter "Damping value". For faster response time, decrease parameter "Damping value". Find a value that meets requirements of signal stability and response time.

Setting	0.0 ... 100.0
Default	0.0 s

Process values (4.2.7.2.)

Sets the process values that are to be smoothed for transfer via the communication interface.

Setting	[ ] Volume flow (point 1) [ ] Sensor temperature (point 1) [ ] Level (point 1) [ ] Space (point 1) [ ] Distance (point 1) [ ] Volume (point 1) [ ] Head (point 1) [ ] Level (point 2)	[ ] Space (point 2) [ ] Distance (point 2) [ ] Volume (point 2) [ ] Head (point 2) [ ] Volume flow (point 2) [ ] Sensor temperature (point 2) [ ] Level difference [ ] Level average
Default	[X] indicates enabled by default [ ] indicates disabled by default	

9.4.2 Modbus RTU (4.3)

9.4.2.1 Slave address (4.3.1)

Sets the slave address.

Setting	1 ... 247
Default	1

9.4.2.2 Change Modbus settings (4.3.3)

Provides step-by-step procedure to change Modbus settings.

Modbus data rate

Sets the serial baud rate.

Setting	• 1200 Bit/s • 2400 Bit/s • 4800 Bit/s • 9600 Bit/s • 19200 Bit/s • 38400 Bit/s • 57600 Bit/s • 76800 Bit/s • 115200 Bit/s
Default	19200 Bit/s

Modbus parity and stopbits

Sets the serial parity and stopbits.

Setting	• Even parity, 1 stopbit • Odd parity, 1 stopbit • No parity, 2 stopbits • No parity, 1 stopbit
Default	Even parity, 1 stopbit

Floating point byte order

Defines the byte transmission sequence for floating-point values according IEEE 754. s=sign, e=exponent, m=mantissa, LSB=least significant byte

Setting	• e+m - s+e - m(LSB) - m • s+e - e+m - m - m(LSB) • m - m(LSB) - s+e - e+m • m(LSB) - m - e+m - s+e
Default	m(LSB) - m -e+m -s+e

Integer byte order

Defines the byte transmission sequence.

Setting	• Big endian (most significant byte first) • Little endian (least significant byte first)
Default	Big endian (most significant byte first)

9.4.2.3 Data rate (4.3.4)

Displays the serial baud rate, set in "Change Modbus settings" (4.3.3).

9.4.2.4 Parity and stopbits (4.3.5)

Displays the serial parity and stopbits, set in "Change Modbus settings" (4.3.3).

9.4.2.5 Floating point byte order (4.3.6)

Displays the byte transmission sequence for floating-point values, set in "Change Modbus settings" (4.3.3).

9.4.2.6 Integer byte order (4.3.7)

Displays the byte transmission sequence, set in "Change Modbus settings" (4.3.3).

9.4.2.7 Register mapping (4.3.8)

This menu is only visible when logged in with "Expert" access level.

Enable (4.3.8.1)

Enables the selected register mappings.

Setting	[X] Register mapping 1 [X] Register mapping 2 [X] Register mapping 3 [X] Register mapping 4 [X] Register mapping 5 [X] Register mapping 6 [X] Register mapping 7 [X] Register mapping 8 [X] Register mapping 9 [X] Register mapping 10	X] Register mapping 11 [X] Register mapping 12 [X] Register mapping 13 [X] Register mapping 14 [X] Register mapping 15 [X] Register mapping 16 [X] Register mapping 17 [X] Register mapping 18 [X] Register mapping 19 [X] Register mapping 20
Default	[X] indicates enabled by default [ ] indicates disabled by default	

Source register 1 (4.3.8.2) to Source register 20 (4.3.8.40)

Sets the register requested via Modbus.

Setting	0 ... 65535
Default	See Custom configurable data map (Page 437).

Target register 1 (4.3.8.3) to Target register 20 (4.3.8.41)

Sets the device internal register to which the source register is redirected.

Setting	0 ... 65535
Default	See Custom configurable data map (Page 437).

9.4.2.8 Units (4.3.9)

Sets the unit to be applied for the communication interface. It is not used for local operation.

Process values (4.3.9.1)

Level (4.3.9.1.1)

Setting	• m (meters) • cm (centimeters) • mm (millimeters) • ft (feet) • in (inches)
Default	m (meters)

Volume (4.3.9.1.2)

Setting	• l (liters) • hl (hectoliters) • m³ (cubic meters) • gal (US gallons) • gal (UK) (imperial gallons) • bbl (US) (31.5 US gallon barrels) • bbl-beer (31 US gallon barrels)	• bbl (42 US gallon barrels) • in³ (cubic inches) • ft³ (cubic feet) • yd³ (cubic yards) • bu (bushels) • Custom
Default	l (liters)	

Volume flow (4.3.9.1.3)

Setting	• l/s (liters per second) • l/min (liters per minute) • l/h (liters per hour) • m³/s (cubic meters per second) • m³/min (cubic meters per minute) • m³/h (cubic meters per hour) • m³/d (cubic meters per day) • Ml/d (megaliters per day) • gal/s (US gallons per second) • gal/min (US gallons per minute) • gal/h (US gallons per hour) • gal/d (US gallons per day) • bbl-beer/s (31 US gallon barrels per second) • bbl-beer/min (31 US gallon barrels per minute) • bbl-beer/h (31 US gallon barrels per hour)	• bbl-beer/d (31 US gallon barrels per day) • bbl/s (42 US gallon barrels per second) • bbl/min (42 US gallon barrels per minute) • bbl/h (42 US gallon barrels per hour) • bbl/d (42 US gallon barrels per day) • ft³/s (cubic feet per second) • ft³/min (cubic feet per minute) • ft³/h (cubic feet per hour) • ft³/d (cubic feet per day) • gal (UK)/s (imperial gallons per second) • gal (UK)/min (imperial gallons per minute) • gal (UK)/h (imperial gallons per hour) • gal (UK)/d (imperial gallons per day) • Mgal/d (US megagallons per day) • Custom
Default	l/s (liters per second)	

Temperature (4.3.9.1.4)

Setting	• °C (degrees Celsius) • °F (degrees Fahrenheit) • °R (degrees Rankine) • K (Kelvin)
Default	°C (degrees Celsius)

Totalizers (4.3.9.2)

Totalizer 1 (4.3.9.2.1)

Setting	• l (liters) • hl (hectoliters) • m³ (cubic meters) • gal (US gallons) • gal (UK) (imperial gallons) • bbl (US) (31.5 US gallon barrels) • bbl-beer (31 US gallon barrels)	• bbl (42 US gallon barrels) • in³ (cubic inches) • ft³ (cubic feet) • yd³ (cubic yards) • bu (bushels) • Custom
Default	l (liters)	

<Totalizer 2 (4.3.9.2.2) to Totalizer 4 (4.3.9.2.4)>

Note

Parameters for "Totalizer 2" to "Totalizer 4"

Parameters for "Totalizer 2" to "Totalizer 4" are the same as those listed previously (for "Totalizer 1": 4.3.9.2.1).

For a complete list of parameters see HMI menu structure (Page 478).

9.4.2.9 Process value damping (4.3.10)

Damping value (4.3.10.1)

Used in the damping (filtering) of process values to smooth out response to sudden changes in measurement. Sets time after which output signal reaches 63% of final value.

An increase of damping increases response time of device, and affects digital value. If output values are noisy, increase parameter "Damping value". For faster response time, decrease parameter "Damping value". Find a value that meets requirements of signal stability and response time.

Setting	0.0 ... 100.0
Default	0.0 s

Process values (4.3.10.2)

Sets the process values that are to be smoothed for transfer via the communication interface.

Setting	[ ] Volume flow (point 1) [ ] Sensor temperature (point 1) [ ] Level (point 1) [ ] Space (point 1) [ ] Distance (point 1) [ ] Volume (point 1) [ ] Head (point 1) [ ] Level (point 2)	[ ] Space (point 2) [ ] Distance (point 2) [ ] Volume (point 2) [ ] Head (point 2) [ ] Volume flow (point 2) [ ] Sensor temperature (point 2) [ ] Level difference [ ] Level average
Default	[X] indicates enabled by default [ ] indicates disabled by default	

9.4.3 PROFIBUS PA/DP (4.4)

9.4.3.1 Slave address (4.4.1)

Displays the slave address.

9.4.3.2 Change slave address (4.4.2)

Provides step-by-step procedure to change PROFIBUS slave address.

Enter new slave address

Sets the slave address.

Setting	0 ... 126
Default	126

Apply?

After entering address, choose "Yes" or "No" to apply.

Setting	• Yes • No
Default	No

9.4.3.3 GSD (General Station Description) (4.4.3)

Sets the current version of the compatible GSD file.

	PROFIBUS PA	PROFIBUS DP
Setting	• Automatic adaption • SITRANS LT500 (si**81de.gsd) • Profile V4 - level radar (pa15B321.gsd) • Profile V3 - 1AI (pa139700.gsd) • Profile V3 - 2AI (pa139701.gsd) • Profile V3 - 3AI (pa139702.gsd)	• Automatic adaption • SITRANS LT500 (si**81df.gsd) • Profile V4 - level radar (pa05B321.gsd) • Profile V3 - 1AI (pa039700.gsd) • Profile V3 - 2AI (pa039701.gsd) • Profile V3 - 3AI (pa039702.gsd)
	** Represents a number that refers to the version of the .gsd file. The current version will be shown per the device firmware. For more information see Product compatibility (Page 15).	
Default	Automatic adaption	

9.4.3.4 Active GSD (General Station Description) (4.4.4)

Displays the current version of the compatible GSD file.

9.4.3.5 Units (4.4.5)

Sets the unit to be applied for the communication interface. It is not used for local operation.

Process values (4.4.5.1)

Level (4.4.5.1.1)

Setting	• m (meters) • cm (centimeters) • mm (millimeters) • ft (feet) • in (inches) • µm (micrometers) • nm (nanometers)	• pm (picometers) • yd (yards) • mi (1760 yards miles) • nmi (nautical miles) • km (kilometers) • Å (ångströms) • Custom
Default	m (meters)	

Volume (4.4.5.1.2)

Setting	• l (liters) • cl (centiliters) • ml (milliliters) • hl (hectoliters) • kl (kiloliters) • m³ (cubic meters) • dm³ (cubic decimeters) • cm³ (cubic centimeters) • mm³ (cubic millimeters) • gal (US gallons) • bbl (US) (31.5 US gallon barrels) • bbl (42 US gallon barrels)	• bbl-beer (31 US gallon barrels) • fl oz (US fluid ounces) • AF (acre-feet) • gal (UK) (imperial gallons) • pt (liq) (US liquid pints) • qt (liq) (US liquid quarts) • in³ (cubic inches) • ft³ (cubic feet) • yd³ (cubic yards) • mi³ (cubic miles) • bu (bushels) • Custom
Default	l (liters)	

Volume flow (4.4.5.1.3)

Setting	• l/s (liters per second) • l/min (liters per minute) • l/h (liters per hour) • l/d (liters per day) • Ml/d (megaliters per day) • hl/s (hectoliters per second) • hl/min (hectoliters per minute) • hl/h (hectoliters per hour) • hl/d (hectoliters per day) • m^3/s (cubic meters per second) • m^3/min (cubic meters per minute) • m^3/h (cubic meters per hour) • m^3/d (cubic meters per day) • Mm^3/d (million cubic meters per day) • gal/s (US gallons per second) • gal/min (US gallons per minute) • gal/h (US gallons per hour) • gal/d (US gallons per day) • Mgal/d (US megagallons per day) • gal (UK)/s (imperial gallons per second) • gal (UK)/min (imperial gallons per minute) • gal (UK)/h (imperial gallons per hour) • gal (UK)/d (imperial gallons per day) • bbl-beer/s (31 US gallon barrels per second) • bbl-beer/min (31 US gallon barrels per minute) • bbl-beer/h (31 US gallon barrels per hour) • bbl-beer/d (31 US gallons barrels per day) • bbl/s (42 US gallon barrels per second) • bbl/min (42 US gallon barrels per minute)	• bbl/h (42 US gallon barrels per hour) • bbl/d (42 US gallon barrels per day) • kbbl/d (thousand 42 US gallon barrels per day) • Mbbl/d (million 42 US gallon barrels per day) • bbl (US)/s (31.5 US gallon barrels per second) • bbl (US)/min (31.5 US gallon barrels per minute) • bbl (US)/h (31.5 US gallon barrels per hour) • bbl (US)/d (31.5 US gallon barrels per day) • ft^3/s (cubic feet per second) • ft^3/min (cubic feet per minute) • ft^3/h (cubic feet per hour) • ft^3/d (cubic feet per day) • Mft^3/d (million cubic feet per day) • AF/min (acre-feet per minute) • AF/h (acre-feet per hour) • AF/d (acre-feet per day) • in^3/s (cubic inches per second) • in^3/min (cubic inches per minute) • in^3/h (cubic inches per hour) • in^3/d (cubic inches per day) • yd^3/s (cubic yards per second) • yd^3/min (cubic yards per minute) • yd^3/h (cubic yards per hour) • yd^3/d (cubic yards per day) • bu/s (bushels per second) • bu/min (bushels per minute) • bu/h (bushels per hour) • bu/d (bushels per day) • Custom
Default	l/s (liters per second)	

Temperature (4.4.5.1.4)

Setting	• °C (degrees Celsius) • °F (degrees Fahrenheit) • °R (degrees Rankine) • K (Kelvin)
Default	°C (degrees Celsius)

Totalizers (4.4.5.2)

Totalizer 1 (4.4.5.2.1)

Setting	• l (liters) • cl (centiliters) • ml (milliliters) • hl (hectoliters) • kl (kiloliters) • m³ (cubic meters) • dm³ (cubic decimeters) • cm³ (cubic centimeters) • mm³ (cubic millimeters) • gal (US gallons) • bbl (US) (31.5 US gallon barrels) • bbl (42 US gallon barrels)	• bbl-beer (31 US gallon barrels) • fl oz (US fluid ounces) • AF (acre-feet) • gal (UK) (imperial gallons) • pt (liq) (US liquid pints) • qt (liq) (US liquid quarts) • in³ (cubic inches) • ft³ (cubic feet) • yd³ (cubic yards) • mi³ (cubic miles) • bu (bushels) • Custom
Default	l (liters)	

<Totalizer 2 (4.4.5.2.2) to Totalizer 4 (4.4.5.2.4)>

Note

Parameters for totalizers

Parameters for totalizers 2 to 4 are the same as those listed previously (for "Totalizer 1": 4.4.5.2.1).

For a complete list of parameters see HMI menu structure (Page 478).

9.4.3.6 Process value damping (4.4.6)

Used in the damping (filtering) of process values to smooth out response to sudden changes in measurement. Sets time after which output signal reaches 63% of final value.

Set damping individually for each process value that follows.

Level (point 1) (4.4.6.1)

Setting	0 ... 100
Default	0 s

Space (point 1) (4.4.6.2)

Setting	0 ... 100
Default	0 s

Distance (point 1) (4.4.6.3)

Setting	0 ... 100
Default	0 s

Head (point 1) (4.4.6.4)

Setting	0 ... 100
Default	0 s

Volume (point 1) (4.4.6.5)

Setting	0 ... 100
Default	0 s

Volume flow (point 1) (4.4.6.6)

Setting	0 ... 100
Default	0 s

Sensor temperature (point 1) (4.4.6.7)

Setting	0 ... 100
Default	0 s

Level (point 2) (4.4.6.8)

Setting	0 ... 100
Default	0 s

Space (point 2) (4.4.6.9)

Setting	0 ... 100
Default	0 s

Distance (point 2) (4.4.6.10)

Setting	0 ... 100
Default	0 s

Head (point 2) (4.4.6.11)

Setting	0 ... 100
Default	0 s

Volume (point 2) (4.4.6.12)

Setting	0 ... 100
Default	0 s

Volume flow (point 2) (4.4.6.13)

Setting	0 ... 100
Default	0 s

Sensor temperature (point 2) (4.4.6.14)

Setting	0 ... 100
Default	0 s

Level difference (4.4.6.15)

Setting	0 ... 100
Default	0 s

Level average (4.4.6.16)

Setting	0 ... 100
Default	0 s

9.4.4 PROFINET (4.5.)

9.4.4.1 MAC address (4.5.1)

Displays the MAC address of the communication card.

9.4.4.2 IP address (4.5.2)

Displays the current IP address of the communication card.

9.4.4.3 IP subnet mask (4.5.3)

Displays the current IP subnet mask of the communication card.

9.4.4.4 Default gateway (4.5.4)

Displays the current default gateway of the communication card.

9.4.4.5 Device name (4.5.5)

Displays device name in the following format: "sitrans-lt500-pbd-xxxxxxxx", where "xxxxxxxx" refers to the device serial number.

9.4.4.6 Units (4.5.6)

Sets the unit to be applied for the communication interface. It is not used for local operation.

Process values (4.5.6.1)

Level (4.5.6.1.1)

Setting	• m (meters) • cm (centimeters) • mm (millimeters) • ft (feet) • in (inches) • µm (micrometers) • nm (nanometers)	• pm (picometers) • yd (yards) • mi (1760 yards miles) • nmi (nautical miles) • km (kilometers) • Å (ångströms) • Custom
Default	m (meters)	

Volume (4.5.6.1.2)

Setting	• l (liters) • cl (centiliters) • ml (milliliters) • hl (hectoliters) • kl (kiloliters) • m³ (cubic meters) • dm³ (cubic decimeters) • cm³ (cubic centimeters) • mm³ (cubic millimeters) • gal (US gallons) • bbl (US) (31.5 US gallon barrels) • bbl (42 US gallon barrels)	• bbl-beer (31 US gallon barrels) • fl oz (US fluid ounces) • AF (acre-feet) • gal (UK) (imperial gallons) • pt (liq) (US liquid pints) • qt (liq) (US liquid quarts) • in³ (cubic inches) • ft³ (cubic feet) • yd³ (cubic yards) • mi³ (cubic miles) • bu (bushels) • Custom
Default	l (liters)	

Volume flow (4.5.6.1.3)

Setting	• l/s (liters per second) • l/min (liters per minute) • l/h (liters per hour) • l/d (liters per day) • Ml/d (megaliters per day) • hl/s (hectoliters per second) • hl/min (hectoliters per minute) • hl/h (hectoliters per hour) • hl/d (hectoliters per day) • m^3/s (cubic meters per second) • m^3/min (cubic meters per minute) • m^3/h (cubic meters per hour) • m^3/d (cubic meters per day) • Mm^3/d (million cubic meters per day) • gal/s (US gallons per second) • gal/min (US gallons per minute) • gal/h (US gallons per hour) • gal/d (US gallons per day) • Mgal/d (US megagallons per day) • gal (UK)/s (imperial gallons per second) • gal (UK)/min (imperial gallons per minute) • gal (UK)/h (imperial gallons per hour) • gal (UK)/d (imperial gallons per day) • bbl-beer/s (31 US gallon barrels per second) • bbl-beer/min (31 US gallon barrels per minute) • bbl-beer/h (31 US gallon barrels per hour) • bbl-beer/d (31 US gallons barrels per day) • bbl/s (42 US gallon barrels per second) • bbl/min (42 US gallon barrels per minute)	• bbl/h (42 US gallon barrels per hour) • bbl/d (42 US gallon barrels per day) • kbbl/d (thousand 42 US gallon barrels per day) • Mbbl/d (million 42 US gallon barrels per day) • bbl (US)/s (31.5 US gallon barrels per second) • bbl (US)/min (31.5 US gallon barrels per minute) • bbl (US)/h (31.5 US gallon barrels per hour) • bbl (US)/d (31.5 US gallon barrels per day) • ft^3/s (cubic feet per second) • ft^3/min (cubic feet per minute) • ft^3/h (cubic feet per hour) • ft^3/d (cubic feet per day) • Mft^3/d (million cubic feet per day) • AF/min (acre-feet per minute) • AF/h (acre-feet per hour) • AF/d (acre-feet per day) • in^3/s (cubic inches per second) • in^3/min (cubic inches per minute) • in^3/h (cubic inches per hour) • in^3/d (cubic inches per day) • yd^3/s (cubic yards per second) • yd^3/min (cubic yards per minute) • yd^3/h (cubic yards per hour) • yd^3/d (cubic yards per day) • bu/s (bushels per second) • bu/min (bushels per minute) • bu/h (bushels per hour) • bu/d (bushels per day) • Custom
Default	l/s (liters per second)	

Temperature (4.5.6.1.4)

Setting	• °C (degrees Celsius) • °F (degrees Fahrenheit) • °R (degrees Rankine) • K (Kelvin)
Default	°C (degrees Celsius)

Totalizers (4.5.6.2)

Totalizer 1 (4.5.6.2.1)

Setting	• l (liters) • cl (centiliters) • ml (milliliters) • hl (hectoliters) • kl (kiloliters) • m³ (cubic meters) • dm³ (cubic decimeters) • cm³ (cubic centimeters) • mm³ (cubic millimeters) • gal (US gallons) • bbl (US) (31.5 US gallon barrels) • bbl (42 US gallon barrels)	• bbl-beer (31 US gallon barrels) • fl oz (US fluid ounces) • AF (acre-feet) • gal (UK) (imperial gallons) • pt (liq) (US liquid pints) • qt (liq) (US liquid quarts) • in³ (cubic inches) • ft³ (cubic feet) • yd³ (cubic yards) • mi³ (cubic miles) • bu (bushels) • Custom
Default	l (liters)	

<Totalizer 2 (4.5.6.2.2) to Totalizer 4 (4.5.6.2.4)>

Note

Parameters for "Totalizer 2" to "Totalizer 4"

Parameters for "Totalizer 2" to "Totalizer 4" are the same as those listed previously (for "Totalizer 1": 4.5.6.2.1).

For a complete list of parameters see HMI menu structure (Page 478).

9.4.4.7 Process value damping (4.5.7)

Used in the damping (filtering) of process values to smooth out response to sudden changes in measurement. Sets time after which output signal reaches 63% of final value.

Set damping individually for each process value that follows.

Level (point 1) (4.5.7.1)

Setting	0 ... 100
Default	0 s

Space (point 1) (4.5.7.2)

Setting	0 ... 100
Default	0 s

Distance (point 1) (4.5.7.3)

Setting	0 ... 100
Default	0 s

Head (point 1) (4.5.7.4)

Setting	0 ... 100
Default	0 s

Volume (point 1) (4.5.7.5)

Setting	0 ... 100
Default	0 s

Volume flow (point 1) (4.5.7.6)

Setting	0 ... 100
Default	0 s

Sensor temperature (point 1) (4.5.7.7)

Setting	0 ... 100
Default	0 s

Level (point 2) (4.5.7.8)

Setting	0 ... 100
Default	0 s

Space (point 2) (4.5.7.9)

Setting	0 ... 100
Default	0 s

Distance (point 2) (4.5.7.10)

Setting	0 ... 100
Default	0 s

Head (point 2) (4.5.7.11)

Setting	0 ... 100
Default	0 s

Volume (point 2) (4.5.7.12)

Setting	0 ... 100
Default	0 s

Volume flow (point 2) (4.5.7.13)

Setting	0 ... 100
Default	0 s

Sensor temperature (point 2) (4.5.7.14)

Setting	0 ... 100
Default	0 s

Level difference (4.5.7.15)

Setting	0 ... 100
Default	0 s

Level average (4.5.7.16)

Setting	0 ... 100
Default	0 s

9.5 Security (5)

9.5.1 Change user PIN (5.1)

Used to change PIN code that enables user access level.

9.5.2 Change expert PIN (5.2)

Used to change PIN code that enables expert access level.

This parameter is only visible with "Expert" access level.

9.5.3 Recovery ID (5.3)

Displays recovery ID that must be provided to Technical Support to obtain the PIN-Unlock-Key (PUK) required to recover the PIN(s).

Record the number shown in parameter "Recovery ID", and the serial number of the device. (Serial number can be found on device nameplate.) When you provide this information to Siemens Technical Support, a PUK (PIN Unlock Key) will be supplied to you. Enter this PUK in parameter "PIN recovery" to reset the user PIN to factory default value.

9.5.4 PIN recovery (5.4)

Used to enter PIN unlock key (PUK) which resets PIN(s) to factory default value. The PUK is available from Technical Support.

For more information see parameter "Recovery ID".

9.5.5 Enable user PIN (5.5)

Used to enable user PIN. To change parameter settings, the user PIN is required.

Setting	• Cancel • Ok
Default	Cancel

This parameter is only visible with "Expert" access level.

9.5.6 Disable user PIN (5.6)

Used to disable user PIN. To change parameter settings, no user PIN is required.

Setting	• Cancel • Ok
Default	Cancel

This parameter is only visible with "Expert" access level.

9.5.7 Auto logout (5.7)

Enables automatic logout from parameter/edit/read only view (return to operation view) 10 minutes after the last button press. If security is enabled and a logout is performed, a PIN is required to login again before any changes can be made to the device.

If parameter "Auto logout" is disabled, the screen will not return to operation view until a manual logout is performed.

Setting	• Disabled • Enabled
Default	Enabled

9.5.8 Logout (5.8)

Used to manually log out of parameter view. If security is enabled, a PIN is required to login again before any parameter changes can be made to the device.

Setting	• Cancel • Ok
Default	Cancel

This parameter is only visible if parameter "Auto logout" (5.7) is disabled.

9.6 Language (6)

Sets the language for the local display.

Setting	• English • Deutsch • Français • Italiano • Español • Português • Nederlands • Dansk • Svenska • Suomi • Polski • русский • 汉语 • 日本語
Default	Based on user configuration at initial startup.

Service and maintenance 10

10.1 Basic safety notes

The device is maintenance-free. However, a periodic inspection according to pertinent directives and regulations must be carried out.

An inspection can include, for example, check of:

- Ambient conditions
- Seal integrity of the process connections, cable entries, and cover
- Reliability of power supply, lightning protection, and grounds

NOTICE
Penetration of moisture into the device Damage to device. • Make sure when carrying out cleaning and maintenance work that no moisture penetrates the inside of the device.

10.2 Cleaning

Cleaning the enclosure

- Clean the outside of the enclosure with the inscriptions and the display window using a cloth moistened with water or a mild detergent.
- Do not use any aggressive cleansing agents or solvents, e.g. acetone. Plastic parts or the painted surface could be damaged. The inscriptions could become unreadable.

10.3 Maintenance and repair work

⚠ WARNING
Impermissible repair of the device • Repair must be carried out by Siemens authorized personnel only.

CAUTION

Hazardous voltage at open device

Risk of electric shock when the enclosure is opened or enclosure parts are removed.

- Before you open the enclosure or remove enclosure parts, de-energize the device.
- If maintenance measures in an energized state are necessary, observe the particular precautionary measures. Have maintenance work carried out by qualified personnel.

10.3.1 Spare parts list

Below is a list of spare parts with article numbers for this device.

Part description	Article number
Replacement lid with 4 button HMI	A5E50113559
Replacement lid with 4 button HMI panel mount version	A5E50113560
Retro fit kit for wall mount to panel mount version	A5E50114010
Replacement SD card	A5E50113554
HART communication module	A5E50113564
PROFIBUS PA communication module	A5E50113568
PROFINET communication module	A5E50113569
Modbus RTU communication module	A5E50113565
PROFIBUS DP communication module	A5E50113567
Replacement motherboard, single-point, includes DC power module	A5E50113558
Replacement motherboard, dual-point, includes DC power module	A5E50113557
Replacement motherboard, single-point, includes AC power module	A5E50113542
Replacement motherboard, dual-point, includes AC power module	A5E50113543

10.3.2 Spare parts replacement with synchronization to memory card

Before replacing mechanical or electrical parts that require synchronization to the memory card, compatibility between hardware and firmware revision numbers must be ensured.

Note

Damage from electrostatic discharge (ESD)

Some components in the device (such as communication cards, or memory cards) are sensitive to electrostatic discharge and could be damaged. Be sure to handle such components in a manner that avoids any potential damage due to ESD.

10.3.3 Replacing memory card

Procedure

1. Use parameter Connect/disconnect (3.7.2.2) (Page 313) to enable the MSD function. This step ensures no further writing to the card from the device (e.g. data logging) is permitted.
2. Isolate the device from power.
3. Open the device lid: Loosen six screws on lid. Lift lid up and to the left on its hinges.
4. Remove the memory card by pressing and releasing it.

   Recommended: Insert card that was removed into a PC and make a backup of all files.
5. Insert the replacement memory card, close the device lid, and reconnect power to device.

Value for parameter Installed (3.7.1) (Page 312), will display "Yes" when memory card is installed properly.

Note

Diagnostic may result when replacing memory card

- If memory card is replaced with a blank card, no diagnostic is displayed.
- If memory card is replaced with a card from another device, diagnostic ID 151 displays. This diagnostic is a notice that configurations can be copied from one device to another without overwriting data. When the memory card is once again inserted into the original device, the data is unchanged, and the memory card works with the original device.

10.4 Firmware update

Procedure

Note

Authorized personnel required

A firmware update is to be performed only by authorized and trained service personnel.

Note

Device restart required

A device restart will occur during the firmware update process.

1. Download the latest available firmware bundle from Product page (www.siemens.com/sitransLT500).
2. Save the firmware bundle to the memory card.
3. Log in to the device with access level "Expert". (See Access control (Page 104)).
   By default, security is disabled, so must first be enabled before login with expert access level.

   Note

   Disable mass storage device (MSD) setting before firmware update

   If service cable is connected at this point, MSD should be disabled in parameter Connect/disconnect (3.7.2.2) (Page 313) to allow firmware update.

4. Navigate to parameter Firmware update (3.13) (Page 330).
5. Select the firmware bundle version (saved in step 2) and press ▶ button. The firmware update will initiate, with a status message shown on the local display when update is complete.
6. Press ▶ button to return to operation view.

10.5 Return procedure

To return a product to Siemens, see Returns to Siemens (www.siemens.com/returns-to-siemens).

Contact your Siemens representative to clarify if a product is repairable, and how to return it. They can also help with quick repair processing, a repair cost estimate, or a repair report/cause of failure report.

NOTICE
Decontamination The product may have to be decontaminated before it is returned. Your Siemens contact person will let you know for which products this is required.

10.6 Disposal

Devices described in this manual should be recycled. They may not be disposed of in the municipal waste disposal services according to the Directive 2012/19/EC on waste electronic and electrical equipment (WEEE).

Devices can be returned to the supplier within the EC and UK, or to a locally approved disposal service for eco-friendly recycling. Observe the specific regulations valid in your country.

Further information about devices containing batteries can be found at: Information about battery / product return (WEEE) (https://support.industry.siemens.com/cs/document/109479891/)

Note

Special disposal required

The device includes components that require special disposal.

- Dispose of the device properly and environmentally through a local waste disposal contractor.

Diagnostics and troubleshooting 11

11.1 Communication troubleshooting

Generally

1. Check the following:
   - Power is available at device.
   - Local display shows relevant data.
   - Device can be programmed using local buttons.
   - If any fault codes show on display, see Fault codes and corrective actions (Page 364) for a detailed list.
2. Verify that wiring connections are correct, and sensor(s) connected to device are powered and running.

Specifically

1. If the device is set to communicate via a HART modem but no communication is returning to the master, check that the device address is set correctly for the HART network.
2. If a device parameter is set via remote communication, but the parameter remains unchanged, try setting the parameter using local buttons.

If you continue to experience problems, go to:

Product page (www.siemens.com/sitransLT500)

Check the FAQs for this device, or contact your Siemens representative.

11.2 Device status symbols

Device status is shown using symbols, and text messages on the local display. Additionally, the symbol and respective text message for each device status can be seen in asset management or process control systems.

Locally, alarms are shown in the lower line of the display. If several diagnostic states are active at the same time, the symbol and message for the most critical state is shown.

Device status characteristics

The device status messages and symbols used on the local display are based on NAMUR (NE 107) status signals, whereas symbols used on a PLC are based on Siemens standard alarm classes (derived from SIMATIC PCS 7). (See parameter Status signal mode (3.2.6) (Page 293) to set the type of status signals used on the local display.)

Device status symbols

The sequence of symbols in this table corresponds to the priority of the device status, beginning with the most critical.

Note

Device status priority

If two faults are present at the same time, the symbol and device status text for the highest priority fault will be shown.

Local display **- NAMUR NE 107 alarm classes**			**PLC** **- Siemens standard alarm classes (based on SIMATIC PCS 7)**		
Symbol	**Device status**	**Priority**	**Symbol**	**Device status**	**Priority**
	Failure	1		Maintenance alarm	1
Action: Maintenance is required immediately.					
	Function check	2		Function check	2
Action: Disable simulation to return to normal operation. **Action**: Wait until the startup is finished. **Action**: If sensor was changed (replaced), no action required.					
	Out of specification	3		Process value alarm	3
Action: Check ambient temperature or process conditions. If possible, install device at different location.					
	Out of specification	3		Process value warning	4
Action: Check ambient temperature or process conditions. If possible, install device at different location.					
	Maintenance required	4		Maintenance demanded	5
Action: Maintenance is strongly recommended as soon as possible.					

Local display **- NAMUR NE 107 alarm classes**			**PLC** **- Siemens standard alarm classes (based on SIMATIC PCS 7)**		
Symbol	**Device status**	**Priority**	**Symbol**	**Device status**	**Priority**
	Maintenance required	4		Maintenance required	6
Action: Maintenance of device should be planned					
No symbol shown	Good - OK		No symbol shown	No assignment	
Action: No action required.					

11.3 Fault codes and corrective actions

11.3.1 Sensor diagnostics

In the following table the sensor diagnostic message IDs are listed along with possible causes and directions for corrective action.

ID	**Symbol** **Namur/ standard**	**Relation**	**Message** **Namur/standard**	**Cause/action**
0		Point 1	Sensor not found. Failure/Maintenance alarm	No communication with sensor. Check connections. Potential product damage. Sensor has malfunctioned. Replace sensor.
1		Point 1	Sensor not supported. Failure/Maintenance alarm	Replace sensor with a supported sensor type. Use generic (4...20 mA) sensor type.
2		Point 1	Invalid device configuration. Failure/Maintenance alarm	One or more of parameters are set to invalid values. Review configuration values and adjust as necessary.

ID	Symbol Namur/ standard	Relation	Message Namur/standard	Cause/action
3		Point 1	Communication error. Failure/Maintenance alarm	Communication between the device and the sensor failed. Check connections. Check shielding or device location for electrical interference.
4		Point 1	Sensor security lock error. Failure/Maintenance alarm	The PIN configured in the device does not match the PIN stored in the sensor. Align PIN between device and sensor.
5		Point 1	Invalid pump configuration. Failure/Maintenance alarm	One or more of parameters are set to invalid values. Check setpoints or conflicting relays assignments. Review configuration values and adjust as necessary.
6		Point 1	Low level cut-off active. Out of specification/Process value warning	The level has dropped below the configured lower cut-off value. Check process conditions.
7		Point 1	Sensor override active. Maintenance required/Maintenance demanded	The level value has been replaced due to an active digital input. Check connections. Check process conditions. Check for material buildup on digital input sensor or verify non-contact sensor reading.
8		Point 1	Filling too quickly. Out of specification/Process value alarm	The level is rising at a rate greater than the configured maximum rate. Check process conditions.
9		Point 1	Emptying too quickly. Out of specification/Process value alarm	The level is falling at a rate greater than the configured maximum rate. Check process conditions.
10		Point 1	Sensor has changed. Function check	Restart or power the device off and on to clear the diagnostic.

ID	Symbol Namur/ standard	Relation	Message Namur/standard	Cause/action
11		Point 1	Sensor input not calibrated. Failure/Maintenance alarm	The factory calibration of the sensor input is invalid. Repair is required. Contact Technical Support.
12		Point 1	Loss of echo. Failure/Maintenance alarm	The sensor was unable to acquire a measurement. Check that installation details are correct. Check process conditions. If the problem persists, contact Technical Support.
13		Point 1	Sensor hardware failure (digital). Failure/Maintenance alarm	The sensor is reporting a hardware failure via HART communication. Restart or power the device off and on. If the problem persists, contact Technical Support.
14		Point 1	Sensor failure (digital). Out of specification/Process value alarm	Sensor reporting failure via HART communication. Refer to the operating instructions of the supported sensor for further information. Check process conditions. If the problem persists, contact Technical Support.
15		Point 1	Invalid primary measuring device (PMD) configuration. Failure/Maintenance alarm	One or more of parameters are set to invalid values. Review configuration values and adjust as necessary.
16		Point 1	Sensor type mismatch. Failure/Maintenance alarm	The detected sensor type does not match the configured sensor type. Verify configuration or replace sensor.
17		Point 1	Invalid application configuration. Failure/Maintenance alarm	Check sensor calibration settings.
18		Point 1	Sensor input mode changed. Out of specification/Process value alarm	The input mode has changed from "Digital" to "Analog" in order to maintain process monitoring.

ID	Symbol Namur/ standard	Relation	Message Namur/standard	Cause/action
19		Point 1	Sensor failure (analog). Out of specification/Process value alarm	The input current is outside the valid measuring range. Check process conditions. Check connections. Check the connected sensor.
20		Point 1	One or more process values with bad status. Out of specification/Process value alarm	Check process conditions. Review configuration values and adjust as necessary.
21		Point 1	Spill condition has been reached or is imminent. Out of specification/Process value alarm	Stop filling vessel immediately.
22		Point 2	Sensor not found. Failure/Maintenance alarm	No communication with sensor. Check connections. Potential product damage. Sensor has malfunctioned. Replace sensor.
23		Point 2	Sensor not supported. Failure/Maintenance alarm	Replace sensor with a supported sensor type. Use generic (4...20 mA) sensor type.
24		Point 2	Invalid device configuration. Failure/Maintenance alarm	One or more of parameters are set to invalid values. Review configuration values and adjust as necessary.
25		Point 2	Communication error. Failure/Maintenance alarm	Communication between the device and the sensor failed. Check connections.
26		Point 2	Sensor security lock error. Failure/Maintenance alarm	The PIN configured in the device does not match the PIN stored in the sensor. Align PIN between device and sensor.

ID	Symbol Namur/ standard	Relation	Message Namur/standard	Cause/action
27		Point 2	Invalid pump configuration. Failure/Maintenance alarm	One or more of parameters are set to invalid values. Check setpoints or conflicting relays assignments. Review configuration values and adjust as necessary.
28		Point 2	Low level cut-off active. Out of specification/Process value warning	The level has dropped below the configured lower cut-off value. Check process conditions.
29		Point 2	Sensor override active. Maintenance re-quired/Maintenance demanded	The level value has been replaced due to an active digi-tal input. Check connections. Check process conditions. Check for material buildup on digital input sensor or verify non-contact sensor reading.
30		Point 2	Filling too quickly. Out of specification/Process value alarm	The level is rising at a rate greater than the configured maximum rate. Check process conditions.
31		Point 2	Emptying too quickly. Out of specification/Process value alarm	The level is falling at a rate greater than the configured maximum rate. Check process conditions.
32		Point 2	Sensor has changed. Function check	Restart or power the device off and on to clear the diag-nostic.
33		Point 2	Sensor input not calibrated. Failure/Maintenance alarm	The factory calibration of the sensor input is invalid. Repair is required. Contact Technical Support.
34		Point 2	Loss of echo. Failure/Maintenance alarm	The sensor was unable to acquire a measurement. Check that installation details are correct. Check process conditions. If the problem persists, contact Technical Support.

ID	Symbol Namur/ standard	Relation	Message Namur/standard	Cause/action
35		Point 2	Sensor hardware failure (digital). Failure/Maintenance alarm	The sensor is reporting a hardware failure via HART communication. Restart or power the device off and on. If the problem persists, contact Technical Support.
36		Point 2	Sensor failure (digital). Out of specification/Process value alarm	Sensor reporting failure via HART communication. Refer to the operating instructions of the supported sensor for further information. Check process conditions. If the problem persists, contact Technical Support.
37		Point 2	Invalid primary measuring device (PMD) configuration. Failure/Maintenance alarm	One or more of parameters are set to invalid values. Review configuration values and adjust as necessary.
38		Point 2	Sensor type mismatch. Failure/Maintenance alarm	The detected sensor type does not match the configured sensor type. Verify configuration or replace sensor.
39		Point 2	Invalid application configuration. Failure/Maintenance alarm	Check sensor calibration settings.
40		Point 2	Sensor input mode change. Out of specification/Process value alarm	The input mode has changed from "Digital" to "Analog" in order to maintain process monitoring.
41		Point 2	Sensor failure (analog). Out of specification/Process value alarm	The input current is outside the valid measuring range. Check process conditions. Check connections. Check the connected sensor.
42		Point 2	One or more process values with bad status. Out of specification/Process value alarm	Check process conditions. Review configuration values and adjust as necessary.

ID	Symbol Namur/ standard	Relation	Message Namur/standard	Cause/action
43		Point 2	Spill condition has been reached or is imminent. Out of specification/Process value alarm	Stop filling vessel immediately.
56		Device	Internal error. Failure/Maintenance alarm	Restart the device. If the problem persists, contact Technical Support.
57		Device	Internal error. Failure/Maintenance alarm	Restart the device. If the problem persists, contact Technical Support.
58		Device	Internal error. Failure/Maintenance alarm	Restart the device. If the problem persists, contact Technical Support.
59		Application	Invalid relay configuration. Failure/Maintenance alarm	A relay is configured for more than one application, e.g. pump control and time of day. Review configuration values and adjust as necessary.
60		Device	Internal error. Failure/Maintenance alarm	Restart the device. If the problem persists, contact Technical Support.
61		Device	Internal error. Failure/Maintenance alarm	Restart the device. If the problem persists, contact Technical Support.
62		Device	Internal error. Failure/Maintenance alarm	Restart the device. If the problem persists, contact Technical Support.

ID	Symbol Namur/ standard	Relation	Message Namur/standard	Cause/action
63		Device	Internal error. Failure/Maintenance alarm	Restart the device. If the problem persists, contact Technical Support.
64		Point 1	Maintenance required. Maintenance required	Maintenance of sensor should be planned.
65		Point 1	Maintenance demanded. Maintenance required /Maintenance demanded	Maintenance of sensor should be planned.
66		Point 1	Echo profile storage memory is full. Function check	Clear echo profile storage memory.
67		Point 1	Volume could not be calculated. Failure/Maintenance alarm	One or more of parameters are set to invalid values. Review configuration values and adjust as necessary.
74		Point 2	Maintenance required. Maintenance required	Maintenance of sensor should be planned.
75		Point 2	Maintenance demanded. Maintenance required /Maintenance demanded	Maintenance of sensor should be planned.

ID	Symbol Namur/ standard	Relation	Message Namur/standard	Cause/action
76		Point 2	Echo profile storage memory is full. Function check	Clear profile storage memory.
77		Point 2	Volume could not be calculated. Failure/Maintenance alarm	One or more of parameters are set to invalid values. Review configuration values and adjust as necessary.

11.3.2 Transmitter diagnostics

In the following table the transmitter diagnostic message IDs are listed along with possible causes and directions for corrective action.

ID	Symbol Na- mur/standard	Relation	Message Namur/standard	Cause/action
100		Volume flow (point 1)	Volume flow (point 1) above alarm limit. Out of specification/Process value alarm	Check process conditions. Adjust the parameter value "Upper alarm limit" to normal process conditions.
101		Volume flow (point 1)	Volume flow (point 1) above warning limit. Out of specification/Process value warning	Check process conditions. Adjust the parameter value "Upper warning limit" to normal process conditions.
102		Volume flow (point 1)	Volume flow (point 1) below warning limit. Out of specification/Process value warning	Check process conditions. Adjust the parameter value "Lower warning limit" to normal process conditions.
103		Volume flow (point 1)	Volume flow (point 1) below alarm limit. Out of specification/Process value alarm	Check process conditions. Adjust the parameter value "Lower alarm limit" to normal process conditions.

ID	Symbol Na- mur/standard	Relation	Message Namur/standard	Cause/action
108		Sensor temperature (point 1)	Sensor temperature (point 1) above alarm limit. Out of specification/Process value alarm	Check process conditions. Adjust the parameter value "Upper alarm limit" to normal process conditions.
109		Sensor temperature (point 1)	Sensor temperature (point 1) above warning limit. Out of specification/Process value warning	Check process conditions. Adjust the parameter value "Upper warning limit" to normal process conditions.
110		Sensor temperature (point 1)	Sensor temperature (point 1) below warning limit. Out of specification/Process value warning	Check process conditions. Adjust the parameter value "Lower warning limit" to normal process conditions.
111		Sensor temperature (point 1)	Sensor temperature (point 1) below alarm limit. Out of specification/Process value alarm	Check process conditions. Adjust the parameter value "Lower alarm limit" to normal process conditions.
136		Totalizer 1	Totalizer 1 above alarm limit. Out of specification/Process value alarm	Check process conditions. Adjust the parameter value "Upper alarm limit" to normal process conditions.
137		Totalizer 1	Totalizer 1 above warning limit. Out of specification/Process value warning	Check process conditions. Adjust the parameter value "Upper warning limit" to normal process conditions.
138		Totalizer 1	Totalizer 1 below warning limit. Out of specification/Process value warning	Check process conditions. Adjust the parameter value "Lower warning limit" to normal process conditions.
139		Totalizer 1	Totalizer 1 below alarm limit. Out of specification/Process value alarm	Check process conditions. Adjust the parameter value "Lower alarm limit" to normal process conditions.

ID	Symbol Na- mur/standard	Relation	Message Namur/standard	Cause/action
140		Totalizer 2	Totalizer 2 above alarm limit. Out of specification/Process value alarm	Check process conditions. Adjust the parameter value "Upper alarm limit" to normal process conditions.
141		Totalizer 2	Totalizer 2 above warning limit. Out of specification/Process value warning	Check process conditions. Adjust the parameter value "Upper warning limit" to normal process conditions.
142		Totalizer 2	Totalizer 2 below warning limit. Out of specification/Process value warning	Check process conditions. Adjust the parameter value "Lower warning limit" to normal process conditions.
143		Totalizer 2	Totalizer 2 below alarm limit. Out of specification/Process value alarm	Check process conditions. Adjust the parameter value "Lower alarm limit" to normal process conditions.
144		Totalizer 3	Totalizer 3 above alarm limit. Out of specification/Process value alarm	Check process conditions. Adjust the parameter value "Upper alarm limit" to normal process conditions.
145		Totalizer 3	Totalizer 3 above warning limit. Out of specification/Process value warning	Check process conditions. Adjust the parameter value "Upper warning limit" to normal process conditions.
146		Totalizer 3	Totalizer 3 below warning limit. Out of specification/Process value warning	Check process conditions. Adjust the parameter value "Lower warning limit" to normal process conditions.
147		Totalizer 3	Totalizer 3 below alarm limit. Out of specification/Process value alarm	Check process conditions. Adjust the parameter value "Lower alarm limit" to normal process conditions.

ID	Symbol Namur/standard	Relation	Message Namur/standard	Cause/action
148		Transmitter electronics temperature	Transmitter electronics temperature too high. Out of specification/Process value alarm	Decrease the ambient temperature. If possible, reposition the device in a different location. Inspect the device for heat-related damages.
149		Transmitter electronics temperature	Transmitter electronics temperature too low. Out of specification/Process value alarm	Increase the ambient temperature. If possible reposition the device in a different location. Inspect the device for cold-related damages.
150		Device	Internal error. Failure/Maintenance alarm	Restart the device. If the problem persists, contact Technical Support.
151		Memory card	Parameter backup disabled. Function check	A memory card of another device has been inserted. Copy the settings from this memory card to the device or insert the original memory card.
152		Memory card	Parameter backup disabled. Function check	A memory card of another device has been inserted. Copy the settings from this memory card to the device or insert the original memory card.
153		Current output (HART)	Loop current in lower saturation. Out of specification/Process value alarm	The process value is so low that the loop current reaches the lower saturation limit and cannot decrease any further. Check process conditions. Adjust parameter value "Lower range value".
154		Current output (HART)	Loop current in upper saturation. Out of specification/Process value alarm	The process value is so high that the loop current reaches the upper saturation limit and cannot increase any further. Check process conditions. Adjust parameter value "Upper range value".
155		Current output (HART)	Loop current error. Failure/Maintenance alarm	Invalid loop current deviation detected. Check current output cable connection. Passive operation: check external power supply.

ID	Symbol Na- mur/standard	Relation	Message Namur/standard	Cause/action
158		Current output (HART)	Cable break. Failure/Maintenance alarm	Check current output cable connection. Passive operation: check external power supply.
159		Transmitter	Internal error in transmitter. Failure/Maintenance alarm	Restart the device. If the problem persists, replace the component.
165		Totalizer 4	Totalizer 4 simulated. Function check	Disable the simulation to return to normal operation.
167		Totalizer 1	Totalizer 1 simulated. Function check	Disable the simulation to return to normal operation.
168		Totalizer 2	Totalizer 2 simulated. Function check	Disable the simulation to return to normal operation.
169		Totalizer 3	Totalizer 3 simulated. Function check	Disable the simulation to return to normal operation.
170		Loop current	Loop current simulated. Function check	Disable the simulation to return to normal operation.
172		Transmitter	Transmitter firmware incompatible. Failure/Maintenance alarm	The component does not have the expected firmware version. Update the product firmware or replace the component.

ID	Symbol Na- mur/standard	Relation	Message Namur/standard	Cause/action
173		Sensor	Sensor firmware incompatible. Failure/Maintenance alarm	The component does not have the expected firmware version. Update the product firmware or replace the component.
174		Local operation	Firmware local operation incompatible. Failure/Maintenance alarm	The component does not have the expected firmware version. Update the product firmware or replace the component.
177		Startup	Device startup. Function check	Wait until the startup is finished. The startup time is specified in the operating instructions. If the diagnostic persists after the specified startup time, restart the device. If the problem persists, contact Technical Support.
178		Transmitter	Transmitter firmware incompatible. Failure/Maintenance alarm	The component does not have the expected firmware version. Update the product firmware or replace the component.
179	Information only	Status signals	Status signals simulated.	Disable the simulation to return to normal operation.
180		Internal error	Internal error. Failure/Maintenance alarm	Failure of communication card or main board. Replace electronics.
181		Memory card	Memory card error. Failure/Maintenance alarm	Replace the memory card.
182		Communication interface	Communication card firmware incompatible. Failure/Maintenance alarm	The component does not have the expected firmware version. Update the product firmware or replace the component.

ID	Symbol Na- mur/standard	Relation	Message Namur/standard	Cause/action
195		Current output 1	Loop current in lower saturation. Out of specification/Process value alarm	The process value is so low that the loop current reaches the lower saturation limit and cannot decrease any further. Check process conditions. Adjust parameter value "Lower range value".
196		Current output 1	Loop current in upper saturation. Out of specification/Process value alarm	The process value is so high that the loop current reaches the upper saturation limit and cannot increase any further. Check process conditions. Adjust parameter value "Upper range value".
201		Current output 2	Loop current in lower saturation. Out of specification/Process value alarm	The process value is so low that the loop current reaches the lower saturation limit and cannot decrease any further. Check process conditions. Adjust parameter value "Lower range value".
202		Current output 2	Loop current in upper saturation. Out of specification/Process value alarm	The process value is so high that the loop current reaches the upper saturation limit and cannot increase any further. Check process conditions. Adjust parameter value "Upper range value".
214		Current output 1	Current output 1 simulated. Function check	Disable the simulation to return to normal operation.
215		Current output 2	Current output 2 simulated. Function check	Disable the simulation to return to normal operation.
217		Process values	Process values frozen. Function check	Freezing of the process values is enabled either via a digital input or the fieldbus. Disable the freezing of the process values to return to normal operation.
218		Outputs	Output channels forced. Function check	Forcing is enabled either via a digital input or the fieldbus. Disable forcing to return to normal operation.

ID	Symbol Na- mur/standard	Relation	Message Namur/standard	Cause/action
222		Modbus	Invalid Modbus register mapping. Failure/Maintenance alarm	At least one source register has been used multiple times. Correct the register mapping.
223		Modbus	Invalid Modbus coil configuration. Failure/Maintenance alarm	A coil has multiple assignments. Correct the coil configurations.
285		Data logging	Data logging, < 30 days remaining. Maintenance required	Low available memory, which is full in 30 days at the latest. Move data logs from the memory card to an alternate storage location to free up memory space on the memory card. Increase the parameter value "Logging interval".
286		Data logging	Data logging, < 7 days remaining. Maintenance required /Maintenance demanded	Low available memory, which is full in 7 days at the latest. Move data logs from the memory card to an alternate storage location to free up memory space on the memory card. Increase the parameter value "Logging interval".
287		Data logging	Data logging memory full. Maintenance required /Maintenance demanded	Move data logs from the memory card to an alternate storage location to free up memory space on the memory card.
312		Digital input 1	Digital input 1 simulated. Function check	Disable the simulation to return to normal operation.
313		Digital input 2	Digital input 2 simulated. Function check	Disable the simulation to return to normal operation.
316		Totalizer 4	Totalizer 4 above alarm limit. Out of specification/Process value alarm	Check process conditions. Adjust the parameter value "Upper alarm limit" to normal process conditions.

ID	Symbol Na- mur/standard	Relation	Message Namur/standard	Cause/action
317		Totalizer 4	Totalizer 4 above warning limit. Out of specification/Process value warning	Check process conditions. Adjust the parameter value "Upper warning limit" to normal process conditions.
318		Totalizer 4	Totalizer 4 below warning limit. Out of specification/Process value warning	Check process conditions. Adjust the parameter value "Lower warning limit" to normal process conditions.
319		Totalizer 4	Totalizer 4 below alarm limit. Out of specification/Process value alarm	Check process conditions. Adjust the parameter value "Lower alarm limit" to normal process conditions.
320		Level (point 1)	Level (point 1) above alarm limit. Out of specification/Process value alarm	Check process conditions. Adjust the parameter value "Upper alarm limit" to normal process conditions.
321		Level (point 1)	Level (point 1) above warning limit. Out of specification/Process value warning	Check process conditions. Adjust the parameter value "Upper warning limit" to normal process conditions.
322		Level (point 1)	Level (point 1) below warning limit. Out of specification/Process value warning	Check process conditions. Adjust the parameter value "Lower warning limit" to normal process conditions.
323		Level (point 1)	Level (point 1) below alarm limit. Out of specification/Process value alarm	Check process conditions. Adjust the parameter value "Lower alarm limit" to normal process conditions.
324		Space (point 1)	Space (point 1) above alarm limit. Out of specification/Process value alarm	Check process conditions. Adjust the parameter value "Upper alarm limit" to normal process conditions.

ID	Symbol Na- mur/standard	Relation	Message Namur/standard	Cause/action
325		Space (point 1)	Space (point 1) above warning limit. Out of specification/Process value warning	Check process conditions. Adjust the parameter value "Upper warning limit" to normal process conditions.
326		Space (point 1)	Space (point 1) below warning limit. Out of specification/Process value warning	Check process conditions. Adjust the parameter value "Lower warning limit" to normal process conditions.
327		Space (point 1)	Space (point 1) below alarm limit. Out of specification/Process value alarm	Check process conditions. Adjust the parameter value "Lower alarm limit" to normal process conditions.
328		Distance (point 1)	Distance (point 1) above alarm limit. Out of specification/Process value alarm	Check process conditions. Adjust the parameter value "Upper alarm limit" to normal process conditions.
329		Distance (point 1)	Distance (point 1) above warning limit. Out of specification/Process value warning	Check process conditions. Adjust the parameter value "Upper warning limit" to normal process conditions.
330		Distance (point 1)	Distance (point 1) below warning limit. Out of specification/Process value warning	Check process conditions. Adjust the parameter value "Lower warning limit" to normal process conditions.
331		Distance (point 1)	Distance (point 1) below alarm limit. Out of specification/Process value alarm	Check process conditions. Adjust the parameter value "Lower alarm limit" to normal process conditions.
332		Volume (point 1)	Volume (point 1) above alarm limit. Out of specification/Process value alarm	Check process conditions. Adjust the parameter value "Upper alarm limit" to normal process conditions.

ID	Symbol Na- mur/standard	Relation	Message Namur/standard	Cause/action
333		Volume (point 1)	Volume (point 1) above warning limit. Out of specification/Process value warning	Check process conditions. Adjust the parameter value "Upper warning limit" to normal process conditions.
334		Volume (point 1)	Volume (point 1) below warning limit. Out of specification/Process value warning	Check process conditions. Adjust the parameter value "Lower warning limit" to normal process conditions.
335		Volume (point 1)	Volume (point 1) below alarm limit. Out of specification/Process value alarm	Check process conditions. Adjust the parameter value "Lower alarm limit" to normal process conditions.
336		Head (point 1)	Head (point 1) above alarm limit. Out of specification/Process value alarm	Check process conditions. Adjust the parameter value "Upper alarm limit" to normal process conditions.
337		Head (point 1)	Head (point 1) above warning limit. Out of specification/Process value warning	Check process conditions. Adjust the parameter value "Upper warning limit" to normal process conditions.
338		Head (point 1)	Head (point 1) below warning limit. Out of specification/Process value warning	Check process conditions. Adjust the parameter value "Lower warning limit" to normal process conditions.
339		Head (point 1)	Head (point 1) below alarm limit. Out of specification/Process value alarm	Check process conditions. Adjust the parameter value "Lower alarm limit" to normal process conditions.
340		Level (point 2)	Level (point 2) above alarm limit. Out of specification/Process value alarm	Check process conditions. Adjust the parameter value "Upper alarm limit" to normal process conditions.

ID	Symbol Na- mur/standard	Relation	Message Namur/standard	Cause/action
341		Level (point 2)	Level (point 2) above warning limit. Out of specification/Process value warning	Check process conditions. Adjust the parameter value "Upper warning limit" to normal process conditions.
342		Level (point 2)	Level (point 2) below warning limit. Out of specification/Process value warning	Check process conditions. Adjust the parameter value "Lower warning limit" to normal process conditions.
343		Level (point 2)	Level (point 2) below alarm limit. Out of specification/Process value alarm	Check process conditions. Adjust the parameter value "Lower alarm limit" to normal process conditions.
344		Space (point 2)	Space (point 2) above alarm limit. Out of specification/Process value alarm	Check process conditions. Adjust the parameter value "Upper alarm limit" to normal process conditions.
345		Space (point 2)	Space (point 2) above warning limit. Out of specification/Process value warning	Check process conditions. Adjust the parameter value "Upper warning limit" to normal process conditions.
346		Space (point 2)	Space (point 2) below warning limit. Out of specification/Process value warning	Check process conditions. Adjust the parameter value "Lower warning limit" to normal process conditions.
347		Space (point 2)	Space (point 2) below alarm limit. Out of specification/Process value alarm	Check process conditions. Adjust the parameter value "Lower alarm limit" to normal process conditions.
348		Distance (point 2)	Distance (point 2) above alarm limit. Out of specification/Process value alarm	Check process conditions. Adjust the parameter value "Upper alarm limit" to normal process conditions.

ID	Symbol Na- mur/standard	Relation	Message Namur/standard	Cause/action
349		Distance (point 2)	Distance (point 2) above warning limit. Out of specification/Process value warning	Check process conditions. Adjust the parameter value "Upper warning limit" to normal process conditions.
350		Distance (point 2)	Distance (point 2) below warning limit. Out of specification/Process value warning	Check process conditions. Adjust the parameter value "Lower warning limit" to normal process conditions.
351		Distance (point 2)	Distance (point 2) below alarm limit. Out of specification/Process value alarm	Check process conditions. Adjust the parameter value "Lower alarm limit" to normal process conditions.
352		Volume (point 2)	Volume (point 2) above alarm limit. Out of specification/Process value alarm	Check process conditions. Adjust the parameter value "Upper alarm limit" to normal process conditions.
353		Volume (point 2)	Volume (point 2) above warning limit. Out of specification/Process value warning	Check process conditions. Adjust the parameter value "Upper warning limit" to normal process conditions.
354		Volume (point 2)	Volume (point 2) below warning limit. Out of specification/Process value warning	Check process conditions. Adjust the parameter value "Lower warning limit" to normal process conditions.
355		Volume (point 2)	Volume (point 2) below alarm limit. Out of specification/Process value alarm	Check process conditions. Adjust the parameter value "Lower alarm limit" to normal process conditions.
356		Head (point 2)	Head (point 2) above alarm limit. Out of specification/Process value alarm	Check process conditions. Adjust the parameter value "Upper alarm limit" to normal process conditions.

ID	Symbol Na- mur/standard	Relation	Message Namur/standard	Cause/action
357		Head (point 2)	Head (point 2) above warning limit. Out of specification/Process value warning	Check process conditions. Adjust the parameter value "Upper warning limit" to normal process conditions.
358		Head (point 2)	Head (point 2) below warning limit. Out of specification/Process value warning	Check process conditions. Adjust the parameter value "Lower warning limit" to normal process conditions.
359		Head (point 2)	Head (point 2) below alarm limit. Out of specification/Process value alarm	Check process conditions. Adjust the parameter value "Lower alarm limit" to normal process conditions.
360		Volume flow (point 2)	Volume flow (point 2) above alarm limit. Out of specification/Process value alarm	Check process conditions. Adjust the parameter value "Upper alarm limit" to normal process conditions.
361		Volume flow (point 2)	Volume flow (point 2) above warning limit. Out of specification/Process value warning	Check process conditions. Adjust the parameter value "Upper warning limit" to normal process conditions.
362		Volume flow (point 2)	Volume flow (point 2) below warning limit. Out of specification/Process value warning	Check process conditions. Adjust the parameter value "Lower warning limit" to normal process conditions.
363		Volume flow (point 2)	Volume flow (point 2) below alarm limit. Out of specification/Process value alarm	Check process conditions. Adjust the parameter value "Lower alarm limit" to normal process conditions.
364		Sensor temperature (point 2)	Sensor temperature (point 2) above alarm limit. Out of specification/Process value alarm	Check process conditions. Adjust the parameter value "Upper alarm limit" to normal process conditions.

ID	Symbol Namur/standard	Relation	Message Namur/standard	Cause/action
365		Sensor temperature (point 2)	Sensor temperature (point 2) above warning limit. Out of specification/Process value warning	Check process conditions. Adjust the parameter value "Upper warning limit" to normal process conditions.
366		Sensor temperature (point 2)	Sensor temperature (point 2) below warning limit. Out of specification/Process value warning	Check process conditions. Adjust the parameter value "Lower warning limit" to normal process conditions.
367		Sensor temperature (point 2)	Sensor temperature (point 2) below alarm limit. Out of specification/Process value alarm	Check process conditions. Adjust the parameter value "Lower alarm limit" to normal process conditions.
368		Level difference	Level difference above alarm limit. Out of specification/Process value alarm	Check process conditions. Adjust the parameter value "Upper alarm limit" to normal process conditions.
369		Level difference	Level difference above warning limit. Out of specification/Process value warning	Check process conditions. Adjust the parameter value "Upper warning limit" to normal process conditions.
370		Level difference	Level difference below warning limit. Out of specification/Process value warning	Check process conditions. Adjust the parameter value "Lower warning limit" to normal process conditions.
371		Level difference	Level difference below alarm limit. Out of specification/Process value alarm	Check process conditions. Adjust the parameter value "Lower alarm limit" to normal process conditions.
372		Level average	Level average above alarm limit. Out of specification/Process value alarm	Check process conditions. Adjust the parameter value "Upper alarm limit" to normal process conditions.

ID	Symbol Na-mur/standard	Relation	Message Namur/standard	Cause/action
373		Level average	Level average above warning limit. Out of specification/Process value warning	Check process conditions. Adjust the parameter value "Upper warning limit" to normal process conditions.
374		Level average	Level average below warning limit. Out of specification/Process value warning	Check process conditions. Adjust the parameter value "Lower warning limit" to normal process conditions.
375		Level average	Level average below alarm limit. Out of specification/Process value alarm	Check process conditions. Adjust the parameter value "Lower alarm limit" to normal process conditions.
384		Level (point 1)	Level (point 1) out-of-bounds alarm. Out of specification/Process value alarm	Check process conditions. Adjust the parameter value "Lower alarm limit" to normal process conditions. Adjust the parameter value "Upper alarm limit" to normal process conditions.
385		Level (point 1)	Level (point 1) in-bounds alarm. Out of specification/Process value alarm	Check process conditions.
386		Level (point 2)	Level (point 2) out-of-bounds alarm. Out of specification/Process value alarm	Check process conditions. Adjust the parameter value "Lower alarm limit" to normal process conditions. Adjust the parameter value "Upper alarm limit" to normal process conditions.
387		Level (point 2)	Level (point 2) in-bounds alarm. Out of specification/Process value alarm	Check process conditions.
388		Level (point 1)	Level (point 1) simulated. Function check	Disable the simulation to return to normal operation.

ID	Symbol Namur/standard	Relation	Message Namur/standard	Cause/action
389		Level (point 2)	Level (point 2) simulated. Function check	Disable the simulation to return to normal operation.
390		Relay output 1	Relay output 1 simulated. Function check	Disable the simulation to return to normal operation.
391		Relay output 2	Relay output 2 simulated. Function check	Disable the simulation to return to normal operation.
392		Relay output 3	Relay output 3 simulated. Function check	Disable the simulation to return to normal operation.
393		Relay output 4	Relay output 4 simulated. Function check	Disable the simulation to return to normal operation.
394		Relay output 5	Relay output 5 simulated. Function check	Disable the simulation to return to normal operation.
395		Relay output 6	Relay output 6 simulated. Function check	Disable the simulation to return to normal operation.
396		Device	Maintenance required. Maintenance required	Maintenance of device should be planned.

ID	Symbol Na- mur/standard	Relation	Message Namur/standard	Cause/action
397		Device	Maintenance demanded. Maintenance required /Maintenance demanded	Maintenance of device should be planned.
398		Service	Maintenance required. Maintenance required	Maintenance of device should be planned.
399		Service	Maintenance demanded. Maintenance required /Maintenance demanded	Maintenance of device should be planned.
400		Calibration	Maintenance required. Maintenance required	Maintenance of device should be planned.
401		Calibration	Maintenance demanded. Maintenance required /Maintenance demanded	Maintenance of device should be planned.
410		Current out- put (HART)	Configuration error. Failure/Maintenance alarm	The configured fault current is within the meas- urement range. Correct settings.

ID	Symbol Na- mur/standard	Relation	Message Namur/standard	Cause/action
411		Current output 1	Configuration error. Failure/Maintenance alarm	The configured fault current is within the measurement range. Correct settings.
412		Current output 2	Configuration error. Failure/Maintenance alarm	The configured fault current is within the measurement range. Correct settings.

11.4 Operation troubleshooting

11.4.1 Common problems

Symptom	Possible cause	Action
Display blank, no lights flashing on PCB	No power, incorrect power	Check voltage at terminals, check wiring connections, check wiring.
Display blank, lights flashing on PCB	Loose or disconnected display cable	Reconnect display cable, or replace lid (HMI).
Display active, sensor not responding	Incorrect sensor connections or wiring; Incorrect sensor selection (or parameter sensor "Type" is disabled)	Verify terminal connections, check sensor field wiring, check any junction box connections
Display shows "**#####**" instead of current measured value	Value too large to show on device segment display	Adjust parameter "Units" so that a smaller value can be shown on device display, e.g. use meters instead of millimeters.
Reading fluctuates while material level is still	Material level is changing	Visually verify, if possible.
	Strong false echoes	Determine source of false echoes and relocate sensor to avoid source.
	Incorrect damping	Adjust parameters "Damping value", "Sensor damping value".
	High noise levels	Verify source and minimize. See Noise problems (Page 393).
	Weak echo	Determine cause: check noise. See Noise problems (Page 393).
	Foam on surface of material	Eliminate source of foaming. Use stilling well.
	Rapid temperature changes	If fluctuation is unacceptable, consider an alternative technology. Contact your Siemens representative.
	Vapors	If fluctuation is unacceptable, consider an alternative product. Contact your Siemens representative.

Symptom	Possible cause	Action
Reading is fixed, but material level changes or reading does not follow material level	Incorrect speed of response	Verify setting for parameter "Response rate" (set in "Quick commissioning wizard") is adequate for process.
	Loss of echo condition (LOE)	Check noise (see Noise problems (Page 393)), buildup or installation issues. Ensure parameter "Fail-safe LOE timer" is not set with too short of a time period. Verify setting for parameter "Response rate" (set in "Quick commissioning wizard") is adequate for process.
	Agitator blade stopped in front of sensor (false echo)	Ensure agitator is running. See note "Unavoidable false echoes from obstructions" below.
	Foam on surface of material	Eliminate source of foaming. Use stilling well.
	Sensor mounting: wrong location or incorrectly mounted	Ensure beam has a clear path to material surface. Verify sensor is not screwed into the flange too tightly.
	Incorrect sensor used for the application	Use correct sensor. Contact your Siemens representative.
	Unavoidable false echoes from obstructions	Relocate sensor to ensure beam has a clear path to material surface. Use manual TVT shaping ("Custom TVT shaper mode"), or function "Auto false echo suppression".
Accuracy varies	Vapors present in varying concentrations	Eliminate vapors or consider a different technology. Contact your Siemens representative.
	Thermal gradients	Insulate vessel.
	Calibration required	If accuracy is better when level is close to sensor and worse when level is far from sensor, perform calibration using "Auto sound velocity wizard". If reading is consistently inaccurate, use parameter "Sensor offset".
Reading erratic	Sensor mounting: wrong location or incorrectly mounted	Ensure beam has a clear path to material surface. Verify sensor is not screwed into the flange too tightly.
	Unavoidable false echoes from obstructions	Relocate sensor to ensure beam has a clear path to material surface. Use manual TVT shaping ("Custom TVT shaper mode"), or function "Auto false echo suppression".
	Multiple echoes	Check mounting location and verify material is not entering near range (also known as blanking or a dead zone). See parameter "Near range".
	Noise in the application	Verify source and minimize. See Noise problems (Page 393).
Incorrect reading (mA output and/or displayed value)	mA function not assigned to correct measurement	Check that correct process value is assigned to the current output.
	When device configured for volume flow: correct exponent not selected	Check configuration. For exponential volume flow applications, verify correct values set for parameter "Flow exponent" and in custom volume flow tables.
	Incorrect vessel or PMD dimensions	For volume application, verify vessel dimensions in parameter "Vessel shape". For volume flow application, verify PMD dimensions. See list of dimension parameters (per PMD) in Primary measuring device (PMD) (2.5.6.1) (Page 258).
	When device configured for custom volume or custom volume flow	For custom volume or volume flow applications, verify parameter "Vessel shape" or "Primary measuring device" are set to "Custom", and X and Y values under custom volume or custom volume flow tables are defined.

Symptom	Possible cause	Action
Relay not activating	Relay not programmed	Program relay.
	Relay incorrectly assigned	Verify with simulation.
	Incorrect relay function selected	Verify with simulation.
	Incorrect setpoints (for pumps assigned to relays)	Verify setpoints.
	Relay damaged	Replace motherboard.
Relay not activating correctly	Relay incorrectly assigned	Verify with simulation.
	Incorrect relay function selected	Verify with simulation.
	Relay incorrectly configured	Verify setting for parameter "Polarity" is correct for the application.
	Incorrect setpoints (for pumps assigned to relays)	Verify setpoints.
No response when echo profile requested via HMI	Sensor is disabled	Verify parameter "Enable echo profile" is enabled. Verify parameter "Type" (sensor) is set correctly, then request an echo profile.
Configuration error 5, 27, or 59 displayed	A relay is assigned to more than one function (e.g. relay 2 is assigned to both an external totalizer and a pump)	Verify that each relay is assigned to one function only. Review pump or relay assignments.
Configuration error 5, or 27 displayed	Pump setpoints are out of order	Verify that all ON setpoints are greater than all OFF setpoints for pump down applications (or vice versa for pump up applications).
	Wall cling adjustment range is too large	Ensure range set in parameter "Wall cling variation" has not caused ON and OFF setpoints to overlap.
Echo profile request results in an error icon that displays for 5 seconds before returning to the echo profile request menu	Another external communication is trying to access an echo profile at the same time	Wait for several seconds and then retry the echo profile request, or disconnect/disable any external communication, such as SIMATIC PDM or Bluetooth app, that may be requesting an echo profile.
Data log files are empty or logging has stopped	Data logging is not enabled	Verify that parameter "Enable data logging" is set to "Enabled".
	MSD is enabled	Check parameters "Auto connection" and "Connect/disconnect" to ensure mass storage device (MSD) function is not enabled.
	USB extension cable has been used (although may not currently be connected)	If a USB extension cable has been used (remove if currently connected), a power reset of the device is required to restart data logging.

11.4.2 Noise problems

Incorrect readings can be the result of noise problems, either acoustic or electrical, in the application.

The noise present at the input to the sensor can be determined by viewing the echo profile locally via the HMI.

If the value with a sensor attached is greater than 5 dB, signal processing problems can occur. High noise decreases the maximum distance that can be measured. The exact relationship between noise and maximum distance is dependent on the sensor type and the material being measured. An average noise level greater than 30 dB may be cause for concern if the installed sensor's maximum operation range matches the range of the application (e.g. 6 m application using a SITRANS LR110). Using a larger sensor with greater transmitted energy should help to improve performance in a noise condition.

11.4.2.1 Determining the noise source

Refer to guidelines found in sensor manuals.

11.4.2.2 Other noise sources

Remove all input and output cables from the device individually while monitoring the noise. If removing a cable reduces the noise, that cable may be picking up noise from adjacent electrical equipment. Check that low voltage cables are not being run adjacent to high voltage cables or near to electrical noise generators such as variable speed drives.

Filtering cables is an option but is not recommended unless all other options have been exhausted.

The device is designed to work near heavy industrial equipment such as variable speed drives. Even so, it should not be located near high voltage wires or switch gear.

Try moving the electronics to a different location. Often moving the electronics a few meters farther from the source of noise will fix the problem. Shielding the electronics is also an option, but it should be a last resort. Proper shielding is expensive and is difficult to install properly–the shielding box must enclose the device electronics completely, and all wires must be brought to the box through grounded metal conduit.

11.4.2.3 Avoiding common wiring problems

- Make sure that the sensor shield wire is connected at the LT500 end only. Do not ground it at any other location.
- Do not connect the sensor shield wire to the white wire.
- The exposed sensor shield wire must be as short as possible.
- Connections between the wire supplied with the sensor, and any customer installed extension wire should only be grounded at the device.
- On Siemens sensors the white wire is negative and the black wire is positive. If the extension wire is colored differently, make sure that it is wired consistently.
- Extension wire must be shielded twisted pair. See the installation section for specifications.

11.4.2.4 Reducing electrical noise

- Ensure that the sensor cable does not run parallel to other cables carrying high voltage or current.
- Move the sensor cable away from noise generators like variable speed drives.
- Put the sensor cable in grounded metal conduit.
- Filter the noise source.
- Check grounding.

11.4.2.5 Reducing acoustical noise

- Move the sensor away from the noise source.
- Use a stilling well.
- Install a rubber or foam bushing or gasket between the sensor and the mounting surface.
- Relocate or insulate the noise source.
- Change the frequency of the noise. Ultrasonic sensors are sensitive to noise in the frequency range of the sensor employed.
- Check that sensor is not mounted too tightly; only hand-tight.

11.4.3 Measurement difficulties

If parameter "Fail-safe behavior activation condition" activates due to a measurement difficulty, the value set in parameter "Fail-safe behavior" displays. In rare cases, the sensor may lock on to a false echo and report a fixed or wrong reading.

Loss of echo (LOE)

The value set in parameter "Fail-safe behavior", and fault code 12 "Loss of echo" display when the echo confidence is below its threshold value.

LOE occurs when:

- Echo is lost and no echo is shown above the ambient noise.
- Two echoes are too similar to differentiate (when BLF algorithm used) (resulting in low confidence and low echo signal strength).
- No echo can be detected within the programmed range. (Parameter "Far Range" can be used to extend range.)

If value set in parameter "Fail-safe behavior" displays, ensure the following conditions:

- Surface monitored is within the sensor maximum range.
- Parameter "Sensor type" matches the sensor used.
- Sensor is located and aimed properly.
- Sensor that has no submergence shield is not submerged.

11.4.3.1 Adjusting sensor aiming

For optimum performance, adjust sensor aiming to provide the best confidence and echo strength for all material levels within the measurement range.

Displaying echoes

Check echo profiles using the HMI. For instructions on how to display an echo profile, see section Requesting an echo profile (Page 98), and for details on how to interpret an echo profile, see section Echo processing (Page 410).

Increase fail-safe timer value

Increase the value in parameter Fail-safe LOE timer (2.1.7) (Page 200) (per measurement point) only if the fail-safe operation will not be compromised by the larger value.

Try this only if LOE exists for short periods of time.

11.4.3.2 Install a sensor with a narrower beam

A consistently incorrect level reading may result due to interference echoes from the sides of a vessel. If this occurs, try installing a longer range (narrower beam) sensor, enter the new "Sensor type" (using the quick commissioning wizard), and (if necessary) optimize aiming and frequency again.

Always contact Siemens service personnel before selecting a sensor to solve this type of problem.

11.4.3.3 Fixed reading

If the reading is a fixed value, regardless of the sensor to material surface distance, ensure:

- Sensor signal beam is free from obstruction
- Sensor is properly aimed
- Sensor is not in contact with any object
- Material mixer (if used) is operating while the sensor is operating. If it is stopped, ensure that the mixer blade has not stopped directly below the sensor.

11.4.3.4 Obstructions in the signal beam

Check for (and remove if present) any signal beam obstruction, or relocate the sensor.

If an obstruction cannot be removed or avoided, adjust the Time Varying Threshold (TVT) curve to reduce the echo confidence derived from the echo reflected by the obstruction (see parameter "Custom TVT shaper mode").

11.4.3.5 Nozzle mountings

If the sensor is mounted on or in a nozzle, grind smooth any burrs or welds on the inside or open end (the end that opens into the vessel). If the problem persists, install a larger diameter or shorter length nozzle, bevel the inside of the bottom end, or cut the open end of the nozzle at a 45° angle.

If the mounting hardware is overtightened, loosen it. Overtightening changes the resonance characteristics of the sensor and can cause problems.

11.4.3.6 Setting device to ignore bad echo

If the preceding remedies have not fixed the problem, the false echo must be ignored. If there is a static, incorrect, high level reading from the device, there is probably an obstruction reflecting a strong echo back to the sensor. If the material level never reaches that point, extend parameter "Near range" to a distance just past the obstruction.

To adjust the time-varying threshold (TVT) to ignore the bad echoes, use auto false echo suppression. If this does not correct the problem, enable "Custom TVT shaper mode", and manually shape around the false echoes. For more information, see parameters "Near range", "Auto false echo suppression", and information regarding Echo selection (Page 411).

11.4.4 Wrong reading

If the reading is erratic or jumps to some incorrect value periodically, ensure:

- Surface monitored is not beyond the programmed range or the maximum range of the sensor
- Material is not falling into the signal beam of the sensor
- Material is not inside the blanking distance (parameter "Near range") of the sensor.

Types of wrong readings

If a periodic wrong reading is always the same value, see section Fixed reading (Page 395).

If the wrong reading is random, ensure the distance from the sensor to the material surface is less than value in parameter "Far range" minus one meter (i.e. ensure you are still within the measurement range programmed in the sensor). If the material/object monitored is outside this range, increase parameter "Far range" as required. This error is most common in OCM applications using weirs.

Liquid splashing

If the material monitored is a liquid, check for splashing in the vessel. Enter a lower value in parameter "Response rate" to stabilize the reading, or install a stilling well. (Contact Siemens representative.)

Adjust the echo algorithm

View echo profiles and if possible, make adjustments to the echo algorithm used by the sensor.

11.4.5 Echo profile display

To assist in troubleshooting echo profiles, pan and zoom options are available. See Requesting an echo profile (Page 98).

Note

Disable profiles on device when requesting from external source

Set parameter "Enable echo profile" to "Disabled" when an echo profile will be requested from an external source; such as a Bluetooth app, or SIMATIC PDM.

Technical specifications 12

Note

Device specifications

Siemens makes every attempt to ensure the accuracy of these specifications but reserves the right to change them at any time.

CAUTION

Impaired protection

The device is to be used only in the manner outlined in this instruction manual or protection provided by the equipment may be impaired.

Note

Device-specific approvals

Always refer to nameplates on the device for device-specific approvals.

12.1 Power

AC version	• 100 to 230 V AC ±15%, 50/60 Hz, 36 VA (17W) [1)] • Fuse: 2 AG, Slow Blow, 0.375 A, 250 V
DC version	• 12 to 30 V DC, 20 W [1)] • Fuse: 2 AG, Slow Blow, 2A, 250 V

[1)] Power consumption is listed at maximum.

12.2 Performance

Measurement rate	• 1/second
Remote sensor polling rate	• HART sensor mode: 1 Hz (Supported sensor) • Analog sensor mode: > 1 Hz (Generic mA sensor)
Memory	• Capacity: 8 GB (micro SD card shipped with device) • File system support: FAT32 / 8.3

Note

Memory card functions support

Only the supplied microSD card is supported for backup, restore, logging, and firmware update.

12.3 User Interfaces

Configuration	Local buttons	
Display (local)	Advanced graphical liquid crystal display	
Connectors	• USB Service port – USB version: V2.0 – USB socket: Mini-B • Accessory port	USB port used for SIMATIC PDM/SITRANS DTM, FW update, Data log extract

12.4 Outputs

mA analog active output	
• Single-point version includes one mA output • Dual-point version includes two mA outputs	• 0 to 20 mA • 4 to 20 mA • Accuracy – ± 20 uA, over 3.5 to 22.6 mA – ± 40 uA, below 3.5 mA • Resolution 3 uA, over 0.1 to 22.6 mA maximum • 750 ohm maximum • Isolated (500 V DC)
Relays [1]	
• Six, maximum [2]	• 4 control • 2 alarm control • All relays rated 5A at 250 V AC, non-inductive
Control relay	4 Form A, NO relay (numbers 1, 2, 4, 5)
Alarm relay	2 Form C, NO, or NC relay (numbers 3, 6)
Optional analog channel on the HART communication card	0 to 20 mA without HART 4 to 20 mA with HART: • Passive - 14 to 30 V (at the terminals), 500 ohm maximum • Active - 350 ohm maximum

[1] All relays are certified only for use with equipment that fails in a state at or under the rated maximums of the relays.

[2] Orderable with 1, 3, or 6 relays

12.5 Inputs

Remote sensor • Single-point version includes one input • Dual-point version includes two inputs Sensor power is always supplied by the LT500.	Terminal voltage:	• Maximum 26 V, Minimum 18 V (0 ... 22.6 mA)
	Wiring:	2 conductor, twisted, shielded, 0.5 ... 0.75 mm^2 (22 ... 18 AWG)
	Maximum cable length:	500 m (1640.42 ft)
	Sensor input communication:	• Active 4 to 20 mA • HART protocol for supported sensors See "Supported remote sensors" below.
	4 ... 20 mA sensor input:	
	• Resolution	0.025 % of full scale
	• Accuracy	0.1 % of full scale
	HART sensor input:	Resolution and accuracy are dependent on connected sensor
Digital (2)	Switching threshold, low	Logical 0 = 0 ... 0.5 V DC
	Switching threshold, high	Logical 1 = 10 ... 50 V DC
	Input current	3 mA maximum draw
	Bias voltage	24 V

Supported remote sensors

- SITRANS Probe LU240 Ultrasonic level sensor
- SITRANS LR110 Radar level sensor
- SITRANS LR120 Radar level sensor
- Generic (analog only, no HART) sensor (passive output)

Note

No external resistance should be added to remote sensor input

An internal 250 ohm resistor exists in the device. To use SIMATIC PDM, connect across remote sensor inputs.

12.6 Construction

Enclosure	
• Wall mount	• 240 mm (9.5 inch) x 175 mm (6.9 inch). Width dimension includes hinges. • Type 4X/NEMA 4X/IP65 [1)] • Polycarbonate
• Panel mount	• 278 mm (10.93 inch) x 198 mm (7.8 inch), width dimension includes flange. • Type 3/NEMA 3/IP54 • Polycarbonate
Display	Backlit HMI LCD display
Cable	• mA output cable to be two copper conductors, twisted shielded wire, 300 VAC, 0.324 ... 0.823 mm^2 (22 ... 18 AWG), nominal capacitance between adjacent conductors @ 1 kHz = 62.3 pF/m (19 pF/ft), nominal capacitance between conductor and shield @ 1 kHz = 108.3 pF/m (33 pF/ft) (Belden [2)] 8760 is acceptable)
Weight	• Wall mount: 1.22 kg (2.68 lb) • Panel mount: 1.35 kg (2.97 lb)

[1)] Use appropriate cable gland/conduit seal to maintain TYPE/IP ratings.

[2)] Belden is a registered trademark of Belden Wire & Cable Company.

For dimensions of parts listed above, see Dimension drawings (Page 406).

12.7 Operating conditions

Location	Indoor/outdoor	
Altitude	2000 m (6,562 ft) maximum	
Vibration resistance	0.5 g at frequencies from 10 Hz to 100 Hz	
Bump/shock resistance	25 g	
Ambient temperature	Storage	-20 to +50 °C (-5 to +122 °F)
	Operating	-20 to +50 °C (-5 to +122 °F)
Relative humidity	• Wall mount: suitable for outdoor (TYPE 4X, IP65 enclosure) • Panel mount: suitable for outdoor (TYPE 3, IP54 enclosure)	
Installation category	II	
Pollution degree	4	

12.8 Communication

Communication type	Optional [1]: • HART [2] • Modbus RTU • PROFIBUS PA • PROFIBUS DP • PROFINET

[1] For a complete list of available communication cards, see latest catalog information at Product page (www.siemens.com/sitransLT500).

[2] Under severe EMI/EMC environments per IEC 61326-1, the accuracy on the HART Fieldbus mA output may decrease to a maximum of ± 250uA.

HART	**Version: 7.5**
Physical layer	HART Physical layer (2 wire half duplex, HART FSK)
Connections	See HART (Page 48)
Termination	Not applicable
Application	General purpose
Device address	0 to 63 (Set via communication or HMI)
Data rate	1.2 Kbps
Data bits	Always 8
Parity	Odd parity, 1 stop bit
Byte order	MSB

Note

Replacing HART card

The HART long address is bound to the specific card installed. If this card is replaced the master system will need to be updated.

Modbus RTU	**Version: V1.1B3**
Physical layer	EIA-RS485 (2 wire half duplex)
Connections	See Modbus RTU (Page 50)
Termination	External 120R resistor across Fieldbus connections 35 and 36
Application	General purpose
Device address	Set by Modbus or HMI range from 1 to 247
Data rate	1.2 Kbps
	2.4 Kbps
	4.8 Kbps
	9.6 Kbps
	19.2 Kbps (default)
	38.4 Kbps
	57.6 Kbps
	76.8 Kbps
	115.2 Kbps
Data bits	Always 8
Parity	Even parity, 1 stop bit (default)
	Odd parity, 1 stop bit
	No parity, 2 stop bits
	No parity, 1 stop bit
Byte order	Byte order adjustable via Modbus or HMI, default Big endian

PROFIBUS PA	**Version: Profile for Process Control Devices 4.01**
Physical layer	MBP (2 wire half duplex), IEC 61158-2
Connections	See PROFIBUS PA/DP (Page 51)
Termination	To be provided externally
Application	General purpose
Device address	0 to 126 (Set via communication or HMI)
Data rate	31.25 Kbps
Data bits	Always 8
Parity	Even parity, 1 stop bit
Byte order	MSB
Bus loading	10 mA

PROFIBUS DP	Version: Profile for Process Control Devices 4.01
Physical layer	EIA-RS485 (2 wire half duplex)
Connections	See PROFIBUS PA/DP (Page 51)
Termination	All DIP switches 'On' to enable internal terminations
Application	General purpose
Device address	0 to 126 (Set via communication or HMI)
Data rate	9.6 Kbps
	19.2 Kbps
	93.75 Kbps
	187.5 Kbps
	0.5 Mbps
	1.5 Mbps
	3 Mbps
	6 Mbps
	12 Mbps
Data bits	Always 8
Parity	Even parity, 1 stop bit
Byte order	MSB
Bus loading	10 mA

PROFINET	Version: Profile for Process Control Devices 4.01
Profile 4	Ready
Physical layer	1 Port, SDMA/CD 100Base-TX Ethernet (IEEE 802.3)
Connections	See PROFINET (Page 51)
Class	B
Redundant mode	S2 support
Application	General purpose
Device address	Station name: sitrans-lt500-pbd-xxxxxxxx
Network settings	IP address subnet mask default gateway set via communication
Data rate	100 Mbps
Parity	IEEE 802.3 Frame check sequence (32-bit CRC)
Byte order	MSB

12.9 Approvals

General	cCSAus, CE, UKCA, FM, cULus, RCM

Dimension drawings

13

Wall mount

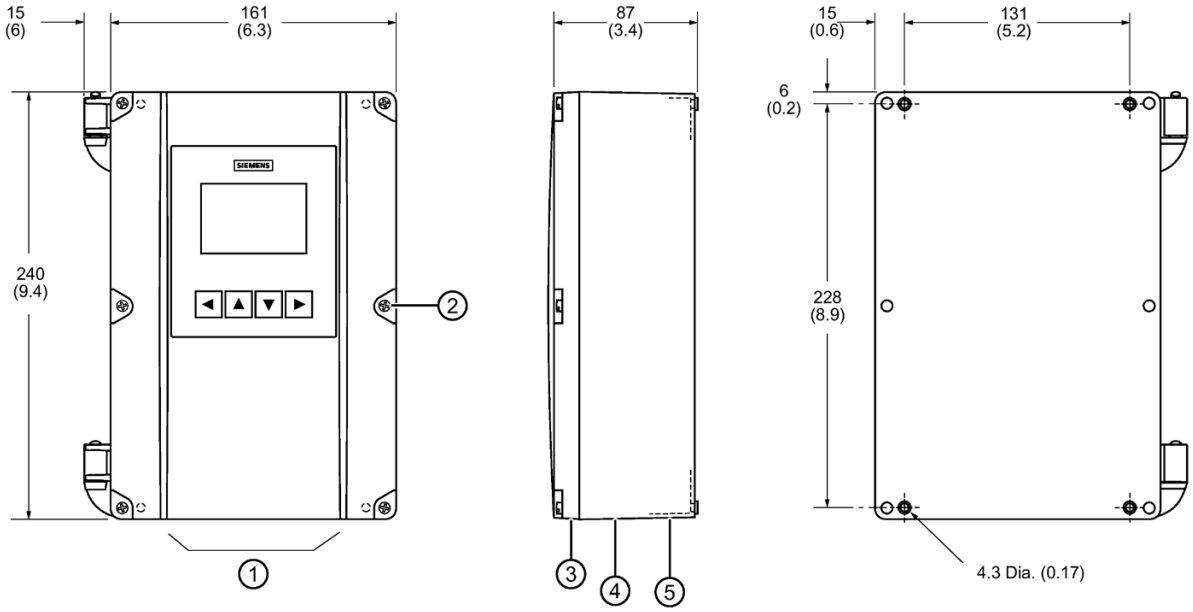

Dimensions in mm (inch)

① Cable entry location
② Lid screws (6)
③ Enclosure lid
④ Cable entry
⑤ Enclosure base

Panel mount

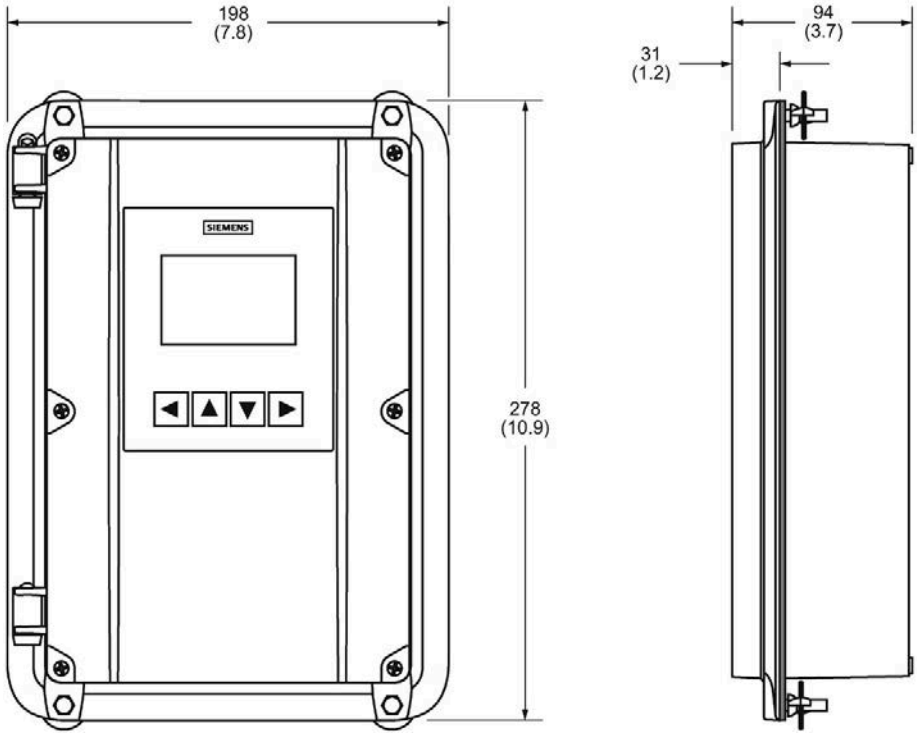

Product documentation and support

A

A.1 Product documentation

Process instrumentation product documentation is available in the following formats:

- Certificates (http://www.siemens.com/processinstrumentation/certificates)
- Downloads (firmware, EDDs, software) (http://www.siemens.com/processinstrumentation/downloads)
- Catalog and catalog sheets (http://www.siemens.com/processinstrumentation/catalogs)
- Manuals (http://www.siemens.com/processinstrumentation/documentation)

  You have the option to show, open, save, or configure the manual.

  - "Display": Open the manual in HTML5 format
  - "Configure": Register and configure the documentation specific to your plant
  - "Download": Open or save the manual in PDF format
  - "Download as html5, only PC": Open or save the manual in the HTML5 view on your PC

You can also find manuals with the Mobile app at Industry Online Support (https://support.industry.siemens.com/cs/ww/en/sc/2067). Download the app to your mobile device and scan the device QR code.

Product documentation by serial number

Using the PIA Life Cycle Portal, you can access the serial number-specific product information including technical specifications, spare parts, calibration data, or factory certificates.

Entering a serial number

1. Open the PIA Life Cycle Portal (https://www.pia-portal.automation.siemens.com).
2. Select the desired language.
3. Enter the serial number of your device. The product documentation relevant for your device is displayed and can be downloaded.

To display factory certificates, if available, log in to the PIA Life Cycle Portal using your login or register.

Scanning a QR code

1. Scan the QR code on your device with a mobile device.
2. Click "PIA Portal".

To display factory certificates, if available, log in to the PIA Life Cycle Portal using your login or register.

A.2 Technical support

Technical support

If this documentation does not completely answer your technical questions, you can enter a Support Request (http://www.siemens.com/automation/support-request).

For help creating a support request, view this video here (www.siemens.com/opensr).

Additional information on our technical support can be found at Technical Support (http://www.siemens.com/automation/csi/service).

Service & support on the Internet

In addition to our technical support, Siemens offers comprehensive online services at Service & Support (http://www.siemens.com/automation/service&support).

Contact

If you have further questions about the device, contact your local Siemens representative at Personal Contact (http://www.automation.siemens.com/partner).

To find the contact for your product, go to "all products and branches" and select "Products & Services > Industrial automation > Process instrumentation".

Contact address for business unit:
Siemens AG
Digital Industries
Process Automation
Östliche Rheinbrückenstr. 50
76187 Karlsruhe, Germany

Technical reference

B

B.1 Echo processing

Echo processing consists of echo enhancement, true echo selection, and selected echo verification.

Note

Advanced echo processing

For advanced echo processing, changes to the sensor must be configured via SIMATIC PDM or via a smart device and Bluetooth.

- Note that performing actions, such as writing parameters to a remote sensor, with a secondary master (e.g. SIMATIC PDM) can result in a slower measurement rate.

True echo verification is automatic. The position (relation in time after transmit) of the new echo is compared to that of the previously accepted echo. When the new echo is within the echo lock window, it is accepted, and displays and outputs are updated per the rate parameters [1]. If the new echo is outside of the window, it is not accepted until echo lock requirements are satisfied.

[1] See menu Rate (2.1.8) (Page 200)

B.1.1 Echo selection

B.1.1.1 TVT (time varying threshold) curves

A TVT curve describes a threshold below which any echoes will be ignored. The default TVT curve is used, until Auto false echo suppression (2.1.9) (Page 201) and Range (2.1.9.2) (Page 202) are used to create a new 'learned TVT curve'.

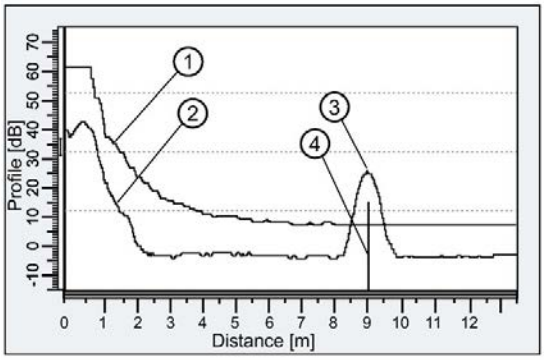

① Default TVT
② Echo profile
③ Material level
④ Echo marker

A TVT hovers above the echo profile to screen out unwanted reflections (false echoes). In most cases the material echo is the only one which rises above the default TVT. In a vessel with obstructions, a false echo may occur. For more information, see Auto false echo suppression and Custom TVT (Page 412).

The device characterizes all echoes that rise above the TVT as potential good echoes. Each peak is assigned a rating based on its strength, area, height above the TVT, and reliability, among other characteristics.

B.1.1.2 Algorithm

The true echo is selected based on an echo selection algorithm that ultimately uses confidence to select the true echo.

For example, SITRANS LT500 uses the ALF algorithm when measuring solids, and BLF algorithm when measuring liquids (based on setting in parameter "Material type"), when connected to SITRANS Probe LU240 sensor.

Algo-rithm		Echo determination	Usage
ALF	**A**rea **L**arg-est **F**irst echo	Selects the echo with the highest confidence value based on the three criterion (widest, highest, and first).	Use in mid to long range solids applications where the material return echo is wide and large, and where competing smaller ech-oes challenge BLF.
BLF	**B**est of **F**irst and **L**argest echo	Selects the echo (first and highest) with the highest confidence value.	Most commonly used. Use in all short to mid range general liquids and solids appli-cations where there is a relatively large (tall), sharp echo.

For more information, see Requesting an echo profile (Page 98).

B.1.1.3 Confidence

Confidence describes the quality of an echo. It is used internally to select the true echo.

For more information, see Requesting an echo profile (Page 98).

B.1.1.4 Echo threshold

An echo threshold is an internal parameter that defines the minimum confidence value required for an echo to be accepted as valid and evaluated.

B.1.1.5 Auto false echo suppression and Custom TVT

If you have a vessel with known obstructions, use auto false echo suppression (AFES) to prevent false echo detection. If the device displays a false high level, or the reading is fluctuating between the correct level and a false high level, this typically is the result of obstructions in the vessel.

False echoes can be caused by an obstruction in the sensor signal beam (such as pipes, ladders, chains). Such false echoes may rise above the default TVT curve.

The device takes a profile for the whole measurement range and the TVT is shaped around all echoes present at that moment.

The AFES parameter Range (2.1.9.2) (Page 202) specifies the range within which the learned TVT is applied. The default TVT is applied over the remainder of the measurement range.

The material level should be below all known obstructions at the moment when the TVT is learned. Ideally the vessel should be empty or almost empty.

AFES range must be set to a distance shorter than the distance to the material level when the environment was learned, to avoid the material echo being screened out.

Example before Auto false echo suppression

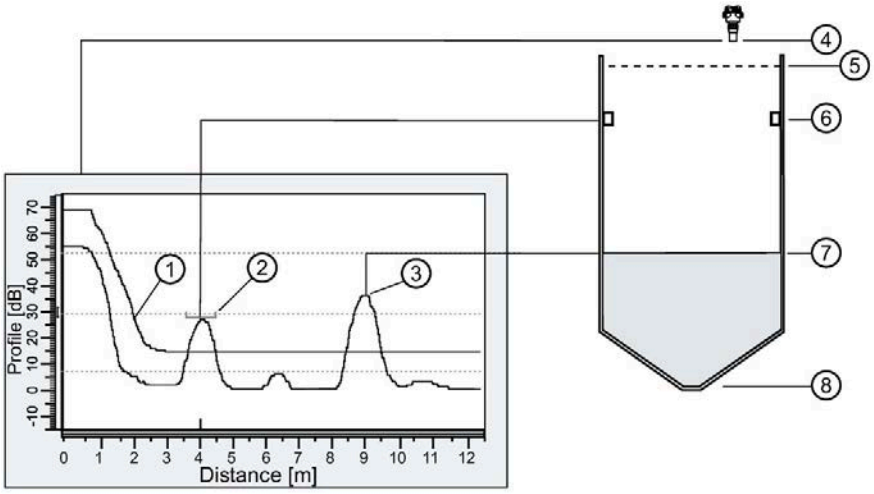

① Default TVT
② False echo
③ Material echo
④ Sensor reference point
⑤ Upper calibration point = 0.5 m
⑥ Obstruction at 4 m
⑦ Material level at 9 m
⑧ Lower calibration point = 12 m

Example after Auto false echo suppression

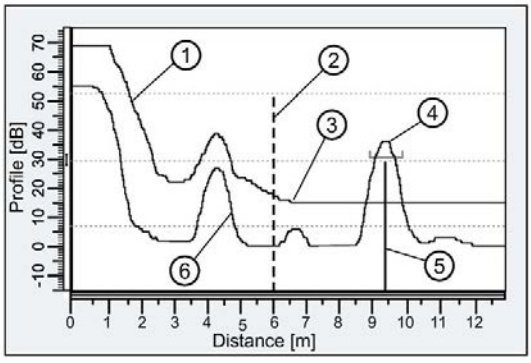

① Learned TVT (applied within AFES range)
② Auto false echo suppression range (set to 6 m)
③ Default TVT (applied outside AFES range)
④ Material echo
⑤ Echo marker
⑥ False echo

Custom TVT breakpoints

This feature allows you to manually adjust the TVT to avoid false echoes caused by obstructions. Enable parameter "Custom TVT shaper mode", then customize up to 40 breakpoints. See Custom TVT breakpoints (2.1.11) (Page 203).

B.1.2 Measurement range

Near range (2.1.6.9) (Page 198) programs the device to ignore the area in front of the sensor. The default value (read from the sensor reference point) is specific to the connected sensor. Near range can be increased from its factory default, but it is generally recommended that Auto false echo suppression (2.1.9) (Page 201) be used instead.

Far range (2.1.6.10) (Page 199) can be used in applications where the base of the vessel is conical or parabolic. A reliable echo may be available below the vessel empty distance (Lower calibration point (2.1.6.1) (Page 197)) due to an indirect reflection path. Increasing Far range by 30% or 40% can provide stable empty vessel readings.

B.1.3 Measurement response

Note

Related rate parameters

Parameter "Response rate" is set in the Quick commissioning wizard (parameter is not available outside of the wizard), and the related rate parameters are defined in meters per minute by default.

Response rate (Page 66) limits the maximum rate at which the display and output respond to changes in the measurement. There are three preset options: slow (default), medium, and fast.

Once the real process fill/empty rate is established (rate is displayed in parameter Rate of change (2.1.8.1) (Page 200)), a response rate can be selected that is slightly higher than the application rate. When parameter "Response rate" is set, it automatically adjusts the related rate parameters that affect the output response rate. (All other process value damping is set to zero by parameter "Response rate". See Damping (Page 415)).

When "Response rate" set to:	**The following parameters automatically adjust to:**			
	"Fill rate indicator limit" (2.1.8.2) "Empty rate indicator limit" (2.1.8.3)	"Fill rate alarm limit" (2.1.8.4) "Empty rate alarm limit" (2.1.8.5)	"Fill rate limit" (2.1.8.6) "Empty rate limit" (2.1.8.7)	"Sensor damping value" (2.1.8.8) *
Slow	0.01 m/min	0.11 m/min	0.1 m/min	100 s
Medium	0.1 m/min	1.1 m/min	1.0 m/min	10 s
Fast	1 m/min	11 m/min	10.0 m/min	0 s

* This parameter is only visible when a SITRANS Probe LU240 sensor or a SITRANS LR1xx sensor is connected.

B.1.3.1 Damping

Damping smooths out the response to a sudden change in measurement. Damping can be set on the raw sensor value (as described in Measurement response (Page 414)), or it can be set on the device process values:

- For the local display - Process value damping (2.8.4) (Page 270)
- Per current output - Inputs and outputs (2.4) (Page 228)
- Per fieldbus - Communication (4) (Page 331)

Note

Damping via wizard vs menu parameters

Upon successful completion of the wizard:

- Sensor damping is set on the supported remote sensor by wizard parameter "Response rate".
- All other damping (local display, current output, fieldbus) is set to zero (disabled).

To effect damping on a generic sensor (that is not pre-configured), or to set further damping of the device outputs, use menu parameter "Damping value" (per local display, current output, fieldbus), after completing the wizard.

- Note that this additional damping will compound the effect of any damping set by parameter "Response rate".

Damping is an exponential filter and the engineering unit is always in seconds.

In five time constants, the output rises exponentially: from 63.2% of the change in the first time constant, to almost 100% of the change by the end of the fifth time constant.

Damping example

Time constant = 2 seconds

Input (level) change = 2 meters

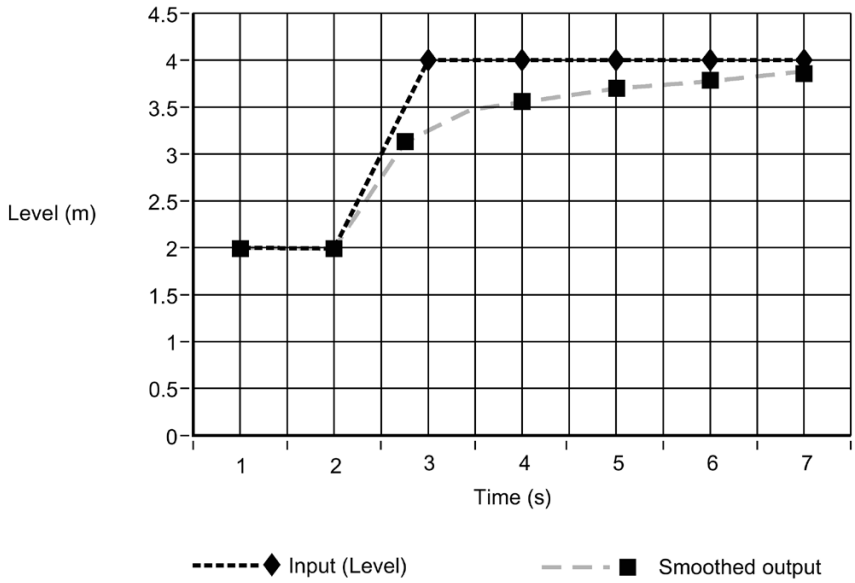

Note

Related rate parameters

Damping parameters ("Sensor damping value" and "Damping value") can be set to zero in order to display measurement readings as fast as fill/empty rates permit.

B.2 Distance calculation

To calculate the sensor to material level (object) distance, the transmission medium (atmosphere) signal velocity is multiplied by the signal transmission to reception time period. This result is divided by two to calculate the one-way distance.

Distance = Signal velocity x Time / 2

B.2.1 Sound velocity (applicable only to Probe LU240)

The sound velocity of the transmission medium is affected by the type, temperature, and vapor pressure of the gas or vapor present. As preset, the device assumes the vessel atmosphere is air at 20 °C (68 °F). Unless altered, the sound velocity used for the distance calculation is 344.1 m/s (1129 ft/s).

Variable air temperature is automatically compensated by use of a temperature sensor in the transducer of the device. If the transmitter is exposed to direct sunlight, use of a sunshield is recommended.

Atmosphere composition other than air can pose a challenge for ultrasonic level measurement. However, excellent results may be obtained by using Auto sound velocity wizard (2.1.6.11) (Page 199) (per point) to perform a sound velocity calibration if the atmosphere is:

- Homogenous (well-mixed)
- At a fixed temperature
- Under constant vapor pressure

The device automatic temperature compensation is based on the sound velocity/temperature characteristics of “air” and may not be suitable for the atmosphere present. If the atmosphere temperature is variable, perform frequent sound velocity calibrations to optimize measurement accuracy.

Sound velocity calibration frequency may be determined with experience. If the sound velocity in two or more vessels is always similar, future calibrations may be performed on one vessel and the resultant sound velocity entered directly for the other vessels.

When the sound velocity of a vessel atmosphere is found to be repeatable at specific temperatures, a chart or curve may be developed. Then, rather than performing a sound velocity calibration each time the vessel temperature changes significantly, the anticipated sound velocity may be entered directly.

B.3 Volume calculation

The device provides a variety of volume calculation features such as:

- Vessel shape (2.5.1.1) (Page 248)
- Maximum volume (2.5.1.2) (Page 249)
- Vessel dimension A (2.5.1.3) (Page 250)
- Vessel dimension L (2.5.1.4) (Page 250)

If the vessel does not match any of the preset vessel shapes, a custom volume calculation may be used. Use the level/volume graph or chart provided by the vessel fabricator (or create one based on the vessel dimensions). Based on the graph, select the level versus volume breakpoints (X-value, Y-value) to be entered (maximum of 32) under the custom volume tables ["Custom volume table (1...16)", "Custom volume table (17...32)"]. Generally, the more breakpoints entered, the greater the accuracy.

Note

Custom application

The custom volume tables are only visible when parameter "Vessel shape" is set to 'Custom'.

Creating a custom volume curve

Breakpoint number	Level breakpoint (X-value n)	Volume breakpoint (Y-value n)
1	0 m	0
2	1 m	200
3	2 m	1200
4	6 m	2600

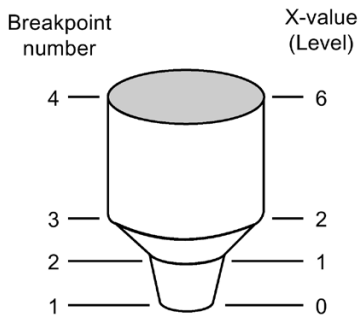

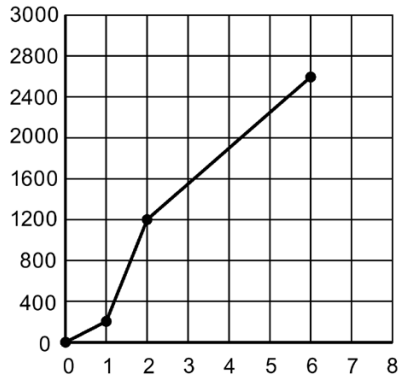

This volume calculation creates a piece-wise linear approximation of the level/volume curve, providing best results if the curve has sharp angles joining relatively linear sections.

Enter a level breakpoint (X-value) at each point where the vessel shape bends sharply (minimum of two). For shapes that are mostly linear but include one or more arcs, enter numerous breakpoints along the arc for best volume calculation accuracy.

Note

Set mA output for a "Custom" application

For a "Custom" volume or volume flow application, the mA output must also be set manually (*after* wizard completion).

Set parameter "Upper range value" for the current output channel used. For example, set Upper range value (2.4.1.6) (Page 230) if using "Current output (HART)".

B.4 Pump totalizers

B.4.1 Inflow/discharge adjustment

Pumped volume totals are affected by the inflow (or discharge) rate. This rate can be calculated based on rate of change estimation, or pump cycle timing.

Using Inflow/discharge adjustment (2.5.4.5) (Page 252), set option "Based on rate estimation" to have the inflow rate measured just prior to the start of the pump cycle.

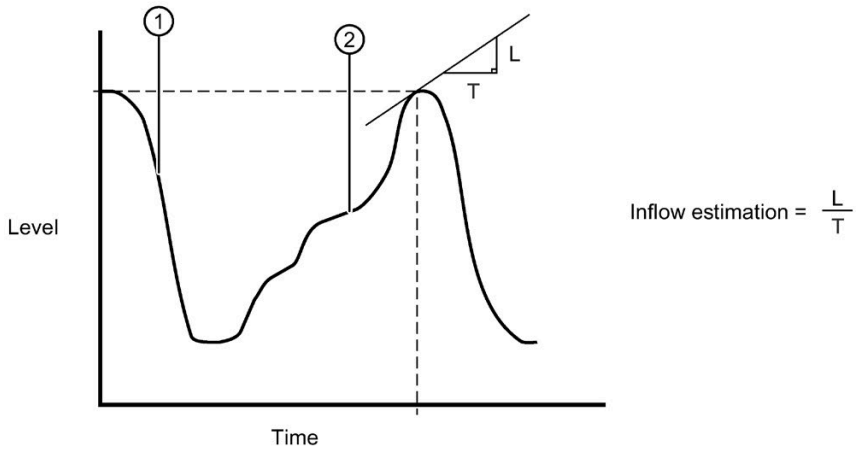

① Pump down

② Well refills

Set option "Based on pump cycle" to calculate the inflow based on the change of volume between the end of the last pump cycle and the start of the next one, and the time period between the last cycle and the current one.

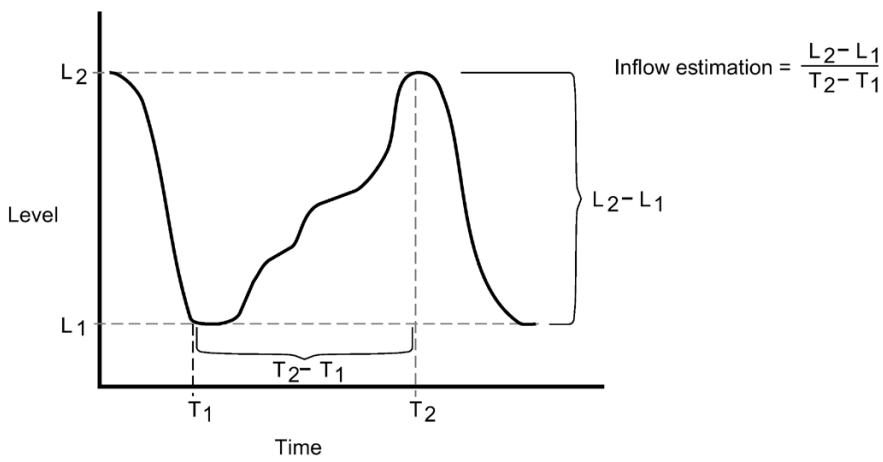

B.5 Volume flow calculation

Special emphasis has been placed on providing the most accurate flow calculations possible. To this end, specific routines have been written to comply with the British Standards Institute's Specifications BS-3680. These routines calculate correction factors taking into account second order effects, such as approach velocity and boundary layer.

If the PMD does not match any of the preset PMD calculations, or if a PMD is not used, a custom flow calculation may be used. Use the level/volume flow graph or chart provided by the PMD fabricator (or create one based on the PMD or channel dimensions). Based on the graph, select the level versus volume flow breakpoints (X-value, Y-value) to be entered (maximum of 32) into the custom volume flow tables. Generally, the more breakpoints entered, the greater the accuracy.

Note

Custom PMD

The custom volume flow tables are only visible when parameter "Primary measuring device" is set to 'Custom'.

Creating a custom PMD curve

Example: V-notch weir

Breakpoint number	Level breakpoint (X-value n)	Volume flow breakpoint (Y-value n)
4	0.4 m	113.5
3	0.3 m	55.3
2	0.2 m	20.07
1	0 m	0

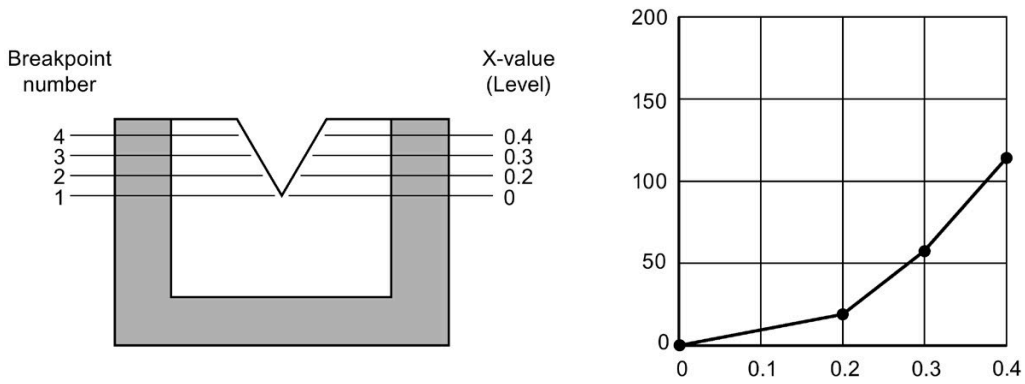

This calculation creates a piece-wise linear approximation of the level/flow curve, providing best results if the curve is non-linear and there are no sharp angles.

Select at least enough breakpoints from the curve to satisfy the following:

- Two breakpoints very near the minimum level
- Minimum two breakpoints near mid-section of PMD
- Two breakpoints very near the maximum level

For combination curves, enter at least two breakpoints immediately before and after any sharp angle (as well as one breakpoint exactly at the angle) on the curve.

Note

Set mA output for a "Custom" application

For a "Custom" volume or volume flow application, the mA output must also be set manually (*after* wizard completion).

Set parameter "Upper range value" for the current output channel used. For example, set Upper range value (2.4.1.6) (Page 230) if using "Current output (HART)".

B.5.1 Example flumes

These example flumes would both require a custom volume flow calculation.

Trapezoidal flume

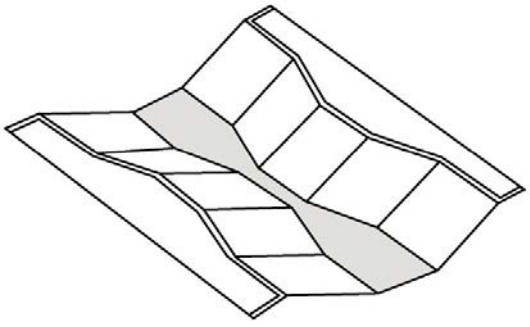

Dual range (nested) Parshall

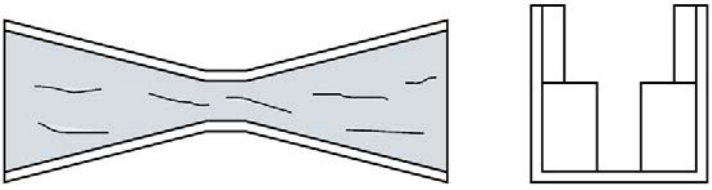

B.5.2 Example weirs

These weirs could require a custom volume flow calculation.

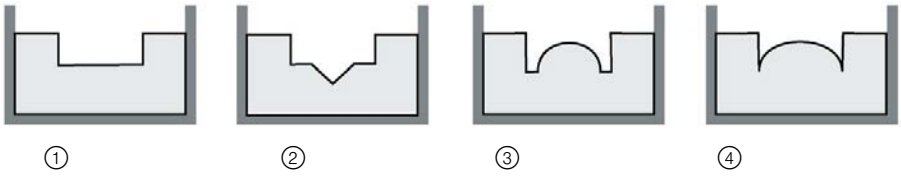

① Contracted regular
② Compound
③ Poebing
④ Approximate exponential

B.5.3 Method of flow calculation

The device can be programmed to use either of two methods for calculating volume flow from the level measurement: absolute or ratiometric. The result is the same regardless of the method used. The main difference is the information that must be entered in order for the device to carry out the calculation. Refer to "Dimensions reference table" under Primary measuring device (PMD) (2.5.6.1) (Page 258) for a list of information required.

For the ratiometric method, it is usually sufficient that the user know the volume flow rate (Q_{cal}) which occurs at maximum level (H_{cal}).

On the other hand, absolute calculations require that the user enter information such as the physical dimensions of the PMD and the constant relating to units of measure for both linear dimensions and volume flow rates.

Example:

The general formula for volume flow through a single exponent PMD is:

$Q = KH^x$

The specific formula for volume flow through a 45 ° V-notch weir is:

$cfs = 1.03H^{2.5}$

Thus: Q = flow in cubic feet per second

K = constant of 1.03

H = head in feet (See Maximum head (2.5.6.4) (Page 260).)

The absolute method is not applicable to the following:

- Palmer-Bowlus flume
- H-flume

Note

Accurate flow calculation

In a volume flow application using exponential device, and absolute method of flow calculation, the following must be consistent for flow calculation to be valid:

- Engineering units for level (parameter Units (2.2.1.1) (Page 207))
- Engineering units for volume flow (parameter Units (2.2.6.1) (Page 215))
- Constant factor (parameter K-factor (2.5.6.11) (Page 262))

B.6 Startup behavior

- Level/time from applying power supply until first sign of life (any visible feedback on the HMI): Current output < 3.6 mA, Time < 3 seconds
- Level/time until regulation of loop current by software on current outputs: Current output ≤ 3.6 mA, Time < 10 seconds
- Level/time until a valid measured value is output on current outputs: Current output at programmed fail-safe level (default is "Lower fault current"), Time < 30 seconds (Current output set based on process value - measurement available - after maximum 30 seconds)

B.7 Diagnostic LEDs

Three LED lights are located on the motherboard and can be seen only when the device lid is open. See Accessing wiring compartment (Page 40).

The lights are used to denote various diagnostic states:

- Green LED
  - When device is powered
- Red LED
  - Steady LED when product has an active maintenance alarm
  - 2 Hz flashing LED when product has an active function check alarm
  - 0.5 Hz flashing LED when product has an active alarm for process alarm/warning or maintenance demanded/required
- Yellow LED
  - When device is responding to a field bus request that was addressed to it

B.8 Expert user parameters

There are several parameters that are only accessible in the device when "Expert" access level is chosen at login.

Parameter name (number)	Description
Advanced logging (3.7.5.5)	This menu contains 90 register parameters used in Modbus communication.
Register mapping (4.3.8)	This menu contains a parameter to enable select register mappings, and 20 source and target register parameters, all of which are used in Modbus communication.
Change expert PIN (5.2)	If logged into device with "Expert" access level, this parameter will be accessible to allow PIN change.
Disable user PIN (5.6)	If user PIN enabled, and user logged into device with "Expert" access level, this parameter will be accessible to disable user PIN.

B.9 Remote sensor parameters

Some parameters on the remote sensor are *controlled* by the SITRANS LT500, and others are *synchronized*.

- When a controlled parameter is changed at the sensor, the LT500 will change it back to the setting it has stored for that parameter.
- When a synchronized parameter is changed at the sensor, the LT500 setting will change with it.

Any change at the LT500 will always change the sensor setting for both controlled and synchronized parameters.

Controlled parameters:

SITRANS Probe LU240	SITRANS LR1xx
PV selection *	MATERIAL TYPE (Material type)
<PV> Units *	-LQD (Liquid)
Fill rate	-SOLID (Solid)
Empty rate	LINEARIZTYP (Linearization type) *
Lower calibration point	<PV> UNITS (Units) *
Upper calibration point	LOWER CAL PT (Lower calibration point)
Sensor offset *	UPPER CAL PT (Upper calibration point)
Loop current mode *	SENSOR OFFSET (Sensor offset) *
Damping value *	LOOP CUR MDE (Loop current mode) *
Upper range value *	DAMPING (Damping)
Lower range value *	OUT CHARACT (Output characteristic) *
Lower saturation point *	SATURATE CUR (Saturation current) *
Upper saturation point *	FAULT CUR (Fault current) *
Lower fault current *	LOE TIMER (Fail-safe LOE timer)
Upper fault current *	NEAR RANGE (Near range)
Fault current *	FREQUENCY (Frequency)
Fail-safe LOE timer	
Near range	
Far range	
Algorithm *	
Position detect *	
Sensor damping value	

* A value for this parameter cannot be set on the sensor from a user parameter on LT500.

Synchronized parameters:

SITRANS Probe LU240	SITRANS LR1xx
Auto false echo suppression	AFES (Auto false echo suppression)
Auto false echo suppression range	AFES RANGE (Auto false echo suppression range)
Custom TVT shaper mode	
Custom TVT breakpoints	

Note

SITRANS LT500 overwrites lock timeout on SITRANS Probe LU240

The LT500, when locking the remote device LU240, enables write protection timeout.

If timeout is disabled by user through others means (such as SIMATIC PDM or other secondary master), the LT500 will enable the timeout again on its next lock operation.

Note

Measurement rate affected

A slower measurement rate can result during configuration of remote sensors. Measurement rate will return to normal once configuration is complete.

B.10 Files stored on memory card

The memory card in the device is used to store various log files, restore points, and the firmware file:

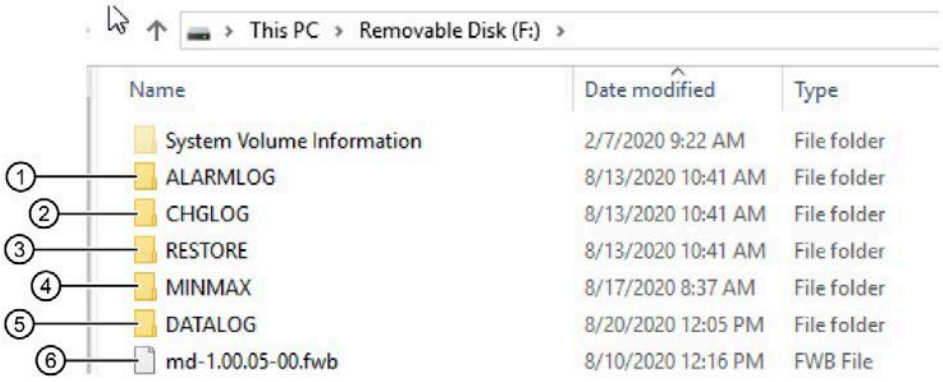

①	Alarm (diagnostic) log	.LOG	Displays alarms as they are activated and deactivated
②	Change logs	.LOG	Contains two logs that display changes in parameters, and firmware updates
③	Restore points	.RPT	Displays a readable report of parameter settings and data for a product restoration
④	Minimum/Maximum log	.LOG	Displays minimum and maximum peak values recorded
⑤	Data log	.LOG	Displays data logs of selected information
⑥	Firmware file	.fwb	

The information provided by, and the layout for each type of file follows.

Alarm (diagnostic) log:

- Timestamp
- Milliseconds
- Alarm class
- Alarm ID + status

`Example: 2020-07-27 12:41:26;937;function check;177 coming`

Parameter change log:

- Timestamp
- Modbus register
- Name (current language)
- Previous value
- New value
- Data type
- Interface ID

Example: `2020-07-27 12:49:15;11400;Enable data logging;0;1;Uint8;HMI`

Restore points (backup):

When a restore point is created, the filename set by the user ("BACKUP1" in this example) shows on the display when later choosing a point to restore. This same filename only shows inside the file on the top line (with the product name and firmware version) if the file is opened directly from the memory card.

For example:

```
Restore point: 2020-07-27 12:59 BACKUP1
Product name: SITRANS LT500
Product firmware version: 1.00.04-00
```

Below this information, each log entry is listed:

- HMI parameter ID
- Name (current language)
- [Enumeration value (if listed parameter option)] OR [Parameter value (if numerical) in HMI unit + HMI unit]
- Modbus register
- Value
- Unit (internal)

Example: `2.5.2.2;PT1 Volume Y-value 1;0.00 l;  3569;0.0;m³`

To ensure proper transition into an editable program, first open the restore point file (**.RPT**) with Notepad, then copy into Excel by using "Text to columns" with a semicolon (;) as the delimiter, if editing in a spreadsheet is desired.

Minimum/Maximum (Peak values) log:

- Timestamp
- Minimum value
- Maximum value
- Boundary type

```
Example: 2020-08-17 08:37:54;4.639426E-1;4.639426E-1;MAX
```

Data log:

Information at top of file includes layout of logged data, plus Name (current language) and HMI units per logged value.

Below this information, each log entry is listed:

- Timestamp
- Milliseconds
- Value of Modbus register

Example: `2020-07-27 12:53:30;433;-1562.941772`

Firmware update log:

- Timestamp
- Firmware version

`Example: 2000-01-01 00:00:00;1.00.04-00`

Communication

C

For detailed specifications per communication module see Communication (Page 403).

C.1 HART

Highway Addressable Remote Transducer, HART, is an industrial protocol. The HART protocol is an open standard. Full details about HART can be obtained from the website HART Communication Foundation (https://fieldcommgroup.org/) .

The device can be configured over the HART network using either a Field Communicator or a software package.

HART Communicator menu structures are available from the website HART Communication Foundation (https://fieldcommgroup.org/).

C.1.1 Device address

Setting a device address is not necessary for local operation, but must be set if configuring the SITRANS LT500 for use on a HART network. See Polling address (SW) (4.2.1) (Page 331).

C.1.2 Mode of operation HART function

The device is also available with HART communication via additional HART communication module. The HART protocol allows you to communicate with your device using a HART communicator, PC, or programming unit. You can do the following with your device:

- Convenient configuration
- Store configurations
- Call up diagnostic data
- Show online measured values

Communication takes place as frequency modulation on the existing signal lines for the setpoint of 4 to 20 mA.

C.1.3 Device variables

All four dynamic variables PV, SV, TV and QV are supported. Except for PV, they can all be freely mapped to all dynamic device variables. The following table shows the possible mappings.

Default values (denoted by asterisk in table below):

PV = Level

SV = Distance

TV = Space

QV = Media temperature

Device variable code	Device variable name		PV	SV	TV	QV
0	Point 1	Level	X*	X	X	X
1		Space	X	X	X*	X
2		Distance	X	X*	X	X
3		Volume	X	X	X	X
4		Head	X	X	X	X
5		Volume flow	X	X	X	X
6		Medium temperature	X	X	X	X*
7	Totalizer 1			X	X	X
8	Totalizer 2			X	X	X
9	Totalizer 3			X	X	X
10	Totalizer 4			X	X	X
11	Point 2	Level	X	X	X	X
12		Space	X	X	X	X
13		Distance	X	X	X	X
14		Volume	X	X	X	X
15		Head	X	X	X	X
16		Volume flow	X	X	X	X
17		Medium temperature	X	X	X	X
18	Level difference between point 1 and point 2		X	X	X	X
19	Level average of point 1 and 2		X	X	X	X
20	Auxiliary temperature		X	X	X	X

Command #9 (HART 6 and 7)

SITRANS LT500 supports HART 7 so it is also possible to assign dynamic variables to the SV, TV, and QV in menu 4.2.5.x so that they can be read with HART command #9. The table above shows the 20 variables that can be assigned.

C.1.4 Universal commands

All universal commands are supported.

#	Description
0	Read unique identifier
1	Read primary variable
2	Read loop current and percent of range
3	Read dynamic variables and loop current
6	Write polling address
7	Read loop configuration
8	Read dynamic variable classification
9	Read device variable with status
11	Read unique identifier associated with tag
12	Read message
13	Read tag, descriptor, date
14	Read primary variable sensor information
15	Read device information
16	Read final assembly number
17	Write message
18	Write tag, descriptor, date
19	Write final assembly number
20	Read long tag
21	Read unique identifier associated with long tag
22	Write long tag
38	Reset configuration changed flag
48	Read additional device status

Command #14: Read primary variable sensor information/minimum span

The command returns for all valid primary variables a minimum span value of 0.

Command #15: Read device information/write protect code

The device does not support write protection. Therefore the response to command #15 contains the write protect code 251. (Write protection is not implemented.)

C.1.5 Common practice commands

The device supports the following Common practice commands:

#	Description
33	Read device variables
34	Write primary variable damping value
35	Write primary variable range values
36	Set primary variable upper range value
37	Set primary variable lower range value
40	Enter/exit fixed current mode
42	Perform device reset
44	Write primary variable units
45	Trim loop current zero
46	Trim loop current gain
50	Read dynamic variable assignment
51	Write dynamic variable assignment
53	Write device variable units
54	Read device variable information
59	Write number of response preambles
60	Read analog channel and percent of range
63	Read analog channel information
70	Read analog channel endpoint values
95	Read device communication statistics

C.1.6 Status information

C.1.6.1 Device status

When a HART command is requested by the HART master the LT500 as part of the response will respond with a device status byte. If bit 4 is set in the status byte the LT500 has more diagnostic information available, see extended device diagnostics available.

Bits	Description
0 (0x01)	Primary variable out of limits
1 (0x02)	Non-primary variable out of limits
2 (0x04)	Loop current saturated
3 (0x08)	Loop current fixed
4 (0x10)	More status available
5 (0x20)	Cold start
6 (0x40)	Configuration changed
7 (0x80)	Device malfunction

C.1.6.2 Device specific status

Device status bitmap (16 bits) generated from the alarm bits in the device status byte. The following bits are defined.

Bits	Description
0 (0x0001)	Process value alarm
1 (0x0002)	Process value warning
2 (0x0004)	Maintenance alarm
3 (0x0008)	Maintenance demanded
4 (0x0010)	Maintenance required
5 (0x0020)	Function check
6 ... 15	Not used, fixed at 0

C.1.6.3 Extended device status

If bit 4 is set in the device status byte extended device status is generated.

Bits	Description	Caused by
0 (0x01)	Maintenance required	One of Bits 2, 3 or 4 of device specific status is currently set.
1 (0x02)	Device variable alert	Bit 0 of device specific status is currently set.
2 ... 7	Not used, fixed to 0	

C.1.6.4 Additional device status (command #48)

HART Command #48 will return 25 bytes of data from the LT500 with the following status information:

Byte	Meaning
0 ... 1	Device specific status
2 ... 5	Unused, fixed to 0
6	Extended device status
7	Device operating mode fixed to 0
8	Standardized status 0 Bit 0 (0x01) Simulation active Bits 1 ... 7 Unused, fixed to 0
9	Standardized status 1 fixed to 0
10	Analog channel saturated fixed to 0
11	Standardized status 2 fixed to 0
12	Standardized status 3 fixed to 0
13	Analog channel fixed to 0
14 ... 24	Not used, fixed to 0

C.1.6.5 Burst mode

This device does not support Burst mode.

C.1.6.6 Catch device variable

This device does not support Catch device variable.

C.2 Modbus RTU

C.2.1 Modbus data map

The LT500 supports Modbus RTU EIA-RS485 communication with the addition of a Modbus communication card.

See Modbus RTU (4.3) (Page 336) for communication protocol setup for Modbus RTU.

The LT500 device parameters are mapped into the Modbus holding register address space and are available via "Read holding registers" and "Write multiple registers" commands.

The LT500 supports the following Modbus RTU commands.

Function Code	Command Text	Description
03	Read holding registers	Reads the content of multiple 16-bit registers
04	Read input registers	Reads the content of multiple 16-bit registers
06	Write single register	Writes the content of a single 16-bit register
07	Read exception status	Global alarms status of the device
08	Diagnostics	Provides a series of tests for checking communication
16	Write multiple registers	Write the content of multiple 16-bit registers
17	Report Server ID	Product type Device running = FF Manufacturer Product name and version
23	Read/write multiple registers	Performs a combination of one read and one write operation in a single Modbus transaction

03 (0x03) Read holding registers

Read holding registers function allows single or multiple registers to be read from the holding register area, the holding registers area allows read/write access.

04 (0x04) Read input registers

Read input registers function allows single or multiple registers to be read from the input register area, the input registers are read only.

06 (0x06) Write single register

Write to a single register in the holding register area.

07 (0x07) Read exception status

Read exception status (Global alarms status).

6246	Global alarms status	Bit 0: Process value alarm (NAMUR: Out of specification) Bit 1: Process value warning (NAMUR: Out of specification) Bit 2: Maintenance alarm (NAMUR: Failure) Bit 3: Maintenance demanded (NAMUR: Maintenance required) Bit 4: Maintenance required (NAMUR: Maintenance required) Bit 5: Function check (NAMUR: Function check) Bits 6 to 15: reserved for future use	Unsigned16

08 (0x08) diagnostics

Diagnostics function provides means for checking the communication between Modbus master and slave. The function uses a sub-function code to select which function is to be performed.

The following sub-function codes are supported:

Sub-function code		Name
Hex	**Dec**	
00	0	Return query data
01	1	Restart communication option

After having restarted the communication, the user may have to adapt the baud rate, framing or Modbus address to get access to the device again.

17 (0x11) report server ID

The LT500 will respond to a Report server ID request from the master by returning information about the device.

Request

Slave address	1 byte	xxhex
Function code	1 byte	11hex
CRC-16	2 bytes	Lower xxhex
		Upper xxhex

Response

Slave address	1 byte	xxhex
Function code	1 byte	11hex
Byte count	1 byte	62
Server ID	1 byte	0 = FC 1 = FS standard 2 = FS hydrocarbon 3 = FS gas 4 = FS energy 6= LT500
Run indicator	1 byte	FF = Running
Manufacturer name	12 bytes	SIEMENS
Product name	32 bytes	SITRANS LT500
Product firmware version	16 bytes	1.00.01-00
CRC-16	2 bytes	Lower xxhex
		Upper xxhex

C.2.2 Access control

Access control manages whether the Modbus master is allowed to modify device parameters. The general access control rules are:

- The Modbus interface has an access level that can be changed by providing PIN information via the Modbus register Modbus End User Privilege (EUP) or Modbus Service User Privilege (SUP).
- Each parameter has a protection level assigned that specifies the required access level to modify the parameter via the Modbus interface.

Access level	Description
Restricted User Privilege (RUP)	Having this access level, the Modbus master is not able to modify the device configuration (setup parameters). The Modbus master is only able to execute commands, e.g. maintenance timers and reset totalizers. This is the default level of the Modbus interface.
End User Privilege (EUP)	Having this access level, the Modbus master is able to modify a subset of the device configuration. The Modbus master has to provide the correct end user password with Modbus register 8292 to reach this access level. The user is a normal user in the plant not having access to critical parts of the configuration.
Service User Privilege (SUP)	Having this access level, the Modbus master is able to modify the configuration of the device. The Modbus master has to provide the correct service user password with Modbus register 8293 to reach this access level. This user level would be a service user at the plant who is allowed full access.

The current access level can be queried via Modbus register 8294.

Modbus holding register	Parameter function	Description	Data type
8292	Input EUP PIN	User input of the end user PIN. The PIN must match the stored end user PIN to get the end user privileges.	Unsigned16
8293	Input SUP PIN	User input of the service user PIN. The PIN must match the stored service user PIN to get the service user privileges.	Unsigned16
8294	Query access level	Current access level through the Modbus interface. 64: Service User Privilege (SUP). 32: End User Privilege (EUP). 16: Restricted User Privilege (RUP).	Unsigned8

C.2.3 Custom configurable data map

In addition to the complete Modbus register data map, the LT500 provides 20 reserved holding registers which can be used to create a custom data map. As default the LT500 has been configured with a default table which can be changed by the user by configuring a sources and destination address in menu "Register mapping" (4.3.8).

The source menu holds the register number being requested by the Modbus master. The target destination holds the LT500 internal Modbus register where the requested parameter data is stored.

The LT500 allows the user to configure up to 20 source/destination registers.

Source menu	Modbus source register	Target destination menu	LT500 destination register	Parameter description	Data type
4.3.8.2	5801	4.3.8.3	8120	Tag name	String32
4.3.8.4	5817	4.3.8.5	3000	PT1 Level	Float32
4.3.8.6	5819	4.3.8.7	3487	PT1 Level status	Unsigned8
4.3.8.8	5820	4.3.8.9	8556	PT1 Level units	Unsigned8
4.3.8.10	5821	4.3.8.11	3202	PT1 Distance	Float32
4.3.8.12	5823	4.3.8.13	3204	PT1 Volume	Float32
4.3.8.14	5825	4.3.8.15	8281	PT1 Volume units	Unsigned8
4.3.8.16	5826	4.3.8.17	3823	PT1 Rate of change	Float32
4.3.8.18	5828	4.3.8.19	3208	PT1 Temperature	Float32
4.3.8.20	5830	4.3.8.21	3206	PT1 Head	Float32
4.3.8.22	5832	4.3.8.23	3014	PT1 Volume flow	Float32
4.3.8.24	5834	4.3.8.25	7500	PT1 Volume flow units	Unsigned8
4.3.8.26	5835	4.3.8.27	8300	Totalizer 1	Float32
4.3.8.28	5837	4.3.8.29	8321	Totalizer 1 units	Unsigned8
4.3.8.30	5838	4.3.8.31	8400	Totalizer 2	Float32

Source menu	Modbus source register	Target destination menu	LT500 destination register	Parameter description	Data type
4.3.8.32	5840	4.3.8.33	13589	Relay outputs (1 to 6)	Unsigned8
4.3.8.34	5841	4.3.8.35	6246	Global alarm status	Unsigned16
4.3.8.36	5842	4.3.8.37	3002	PT2 Level	Float32
4.3.8.38	5844	4.3.8.39	3214	PT2 Volume	Float32
4.3.8.40	5846	4.3.8.41	3018	PT2 Volume flow	Float32

Note

Data type for totalizers

If higher precision is required for Totalizer 1 and Totalizer 2, a 64-bit representation of the values are available.

- For Totalizer 1: Change (4.3.8.27) from 8300 to 10672
- For Totalizer 2: Change (4.3.8.31) from 8400 to 10676

C.2.4 Fixed Modbus data map

A complete Modbus data map is available from Siemens Industry Online Support (SIOS) (https://support.industry.siemens.com).

The data map below is a basic data map which shows the basic process information.

In addition to the custom data map, the LT500 also supports a conventional fixed data map with all registers mapped into the Modbus holding register area.

Process values

Register	Data description	R/W	Data type
Level measurement PT1 and PT2			
3000	PT1 Level	R	Float32
3002	PT2 Level	R	Float32
Process measurement PT1 and PT2			
3200	PT1 Space	R	Float32
3202	PT1 Distance	R	Float32
3204	PT1 Volume	R	Float32
3206	PT1 Head	R	Float32
3208	PT1 Temperature from connected HART Sensor	R	Float32
3210	PT2 Space	R	Float32
3212	PT2 Distance	R	Float32
3214	PT2 Volume	R	Float32
3216	PT2 Head	R	Float32
3218	PT2 Temperature from HART Sensor	R	Float32

Register	Data description	R/W	Data type
Dual-point average and differential			
3220	Level difference	R	Float32
3222	Level average	R	Float32
Auxiliary temperature input			
3224	Auxiliary temperature input	R	Float32

mA input

Register	Data description	R/W	Data type
3801	mA input 1 (mA)	R	Float32
3803	mA input 2 (mA)	R	Float32
3805	mA input 1 quality status	R	Unsigned8
3806	mA input 2 quality status	R	Unsigned8

mA input quality codes

Status	Data description
0	0: BAD
1	Uncertain (mA is in the non-linear operating range)
2	Simulated value
3	Good

Level quality status

Register	Data description	R/W	Data type
3487	PT1 Level status	R	Unsigned8
3488	PT2 Level status	R	Unsigned8
3489	PT1 Volume status	R	Unsigned8
3490	PT2 Volume status	R	Unsigned8

Relay status

Register	Data description	Value	R/W	Data type
13589	Relay status	Shows the current status of the relays Bit 0 = Relay 1 Bit 1 = Relay 2 Bit 2 = Relay 3 Bit 3 = Relay 4 Bit 4 = Relay 5 Bit 5 = Relay 6 Bit 6 = Reserved Bit 7 = Reserved	R	Unsigned8

Volume flow

Register	Data description	R/W	Data type
3014	PT1 Volume flow	R	Float32
3018	PT2 Volume flow	R	Float32

Totalizers

Register	Data description	R/W	Data type
8300	Totalizer 1	R	Float32
8400	Totalizer 2	R	Float32
8500	Totalizer 3	R	Float32
13601	Totalizer 4	R	Float32

Reset totalizers

Register	Data description	Value	R/W	Data type
8549	Reset totalizers	Resets totalizer 1 to 4 Bit 0 = Do nothing Bit 1 = Reset all totalizers Bit 2 to 10 = Reserved Bit 11 = Reset totalizer 1 Bit 12 = Reset totalizer 2 Bit 13 = Reset totalizer 3 Bit 14 = Reset totalizer 4	R	Unsigned8

Rate of change

Register	Data description	Value	R/W	Data type
3823	PT1 Rate of change	Rate of change in m/min	R	Float32
3836	PT2 Rate of change	Rate of change in m/min	R	Float32

Length units for Modbus

Register	Data description	Value	R/W	Data type
8556	Length units	Unit for length set in Modbus Communication menu 4.3.9.1 44: Feet 45: Meters 47: Inches 48: Centimeters 49: Millimeters	R/W	Unsigned8

Volume flow units for Modbus

Register	Data description	Value	R/W	Data type
7500	Volume flow units	Unit for Volume flow set in Modbus Communication menu 4.3.9.3 15: Cubic feet per minute 16: US gallons per minute 17: Liters per minute 18: Imperial gallons per minute 19: Cubic meters per hour 22: US gallons per second 23: Million US gallons per day 24: Liters per second 25: Million liters per day 26: Cubic feet per second 27: Cubic feet per day 28: Cubic meters per second 29: Cubic meters per day 30: Imperial gallons per hour 31: Imperial gallons per day 130: Cubic feet per hour 131: Cubic meters per minute 132: Barrels (= 42 US gallons) per second 133: Barrels (= 42 US gallons) per minute 134: Barrels (= 42 US gallons) per hour 135: Barrels (= 42 US gallons) per day 136: US gallons per hour 137: Imperial gallons per second 138: Liters per hour 170: Beer barrel per second 171: Beer barrel per minute 172: Beer barrel per hour 173: Beer barrel per day 235: US gallons per day 253: Custom volume flow unit	R/W	Unsigned8

Volume units for Modbus

Register	Data description	Value	R/W	Data type
8281	Volume units	Unit for Volume set in Modbus Communication menu 4.3.9.2 40: US gallons 41: Liters 42: Imperial gallons 43: Cubic meters 46: Oil barrels 110: Bushels 111: Cubic yards 112: Cubic feet 113: Cubic inches 124: Liquid barrels 170: Beer barrels 236: Hectoliters 253: Custom volume unit	R/W	Unsigned8

Totalizer volume units for Modbus

Register	Data description	Value	R/W	Data type
8321 (Totalizer 1) 8421 (Totalizer 2) 8521 (Totalizer 2) 8621 (Totalizer 4)	Totalizer volume units	Unit for Totalizers set in Modbus Communication menu 4.3.9.16 to menu 4.3.9.19 40: US gallons 41: Liters 42: Imperial gallons 43: Cubic meters 46: Oil barrels 110: Bushels 111: Cubic yards 112: Cubic feet 113: Cubic inches 124: Liquid barrels 170: Beer barrels 236: Hectoliters 253: Custom volume unit	R/W	Unsigned8

Sensor temperature units for Modbus

Register	Data description	Value	R/W	Data type
7700	Sensor temperature units	Unit for Temperature set in Modbus Communication menu 4.3.9.15 32: °C 33: °F 34: °R 35: K	R/W	Unsigned8

Communication setup

Register	Data description	Value	R/W	Data type
8298	Modbus baud rate	Current baud rate shown in Modbus Communication menu 4.3.4 0: 9600 bps 1: 19200 bps (Default) 2: 115200 bps 4: 38400 bps 5: 57600 bps 6: 76800 bps 7: 1200 bps 8: 2400 bps 9: 4800 bps	R/W	Unsigned8
8299	Modbus parity	Current parity shown in Modbus Communication menu 4.3.5 (8 databits are always used) 0: Even parity, 1 stopbit 1: Odd parity, 1 stopbit 2: No parity, 2 stopbits 3: No parity, 1 stopbit	R/W	Unsigned8

Byte format

The data byte order for integer and floating-point values can be changed via the Modbus communication menu or via Modbus. The default byte order is "Big endian".

Register	Data description	Value	R/W	Data type
8295	Integer byte order	Integer byte order is set in Modbus Communication menu 4.3.7 0: MSB - LSB (big endian) 1: LSB - MSB (little endian) MSB=most significant byte / high byte LSB=least significant byte / low byte	R/W	Unsigned8
8296	Float byte order	Float32 byte order is set in Modbus Communication menu 4.3.6 0: 1-0-3-2 1: 0-1-2-3 2: 2-3-0-1 3: 3-2-1-0 The first mentioned byte is the first byte sent. Byte 3 corresponds to the left-most byte (MSB) of a 32 bit float in big endian format, byte 0 to the right-most byte.	R/W	Unsigned8

C.3 PROFIBUS

SITRANS LT500 with the addition of a PROFIBUS PA/DP communication card allows communication with a PROFIBUS DP master, for both cyclic and acyclic communication.

LT500 supports the PA Profile 4.1 for process automation.

C.3.1 GSD files

To allow SITRANS LT500 to operate on a PROFIBUS PA/DP network, a GSD file is required. The GSD file must be loaded into the PROFIBUS configuration tool as part of the system configuration.

SITRANS LT500 supports a manufacture specific GSD file and generic Profile 4 and 3.1.

The GSD profile version, shown in device parameter 4.4.4, can be changed if a different profile version is required. The default GSD file option is set to "Automatic adaption" in parameter 4.4.3.

PROFIBUS PA GSD files

Filename	Description
si**81de.gsd	SITRANS LT500 specific GSD for PA
pa15B321.gsd	PA Profile 4 specific GSD for Level radar devices PA (Level, Distance)
pa139700.gsd	PA Profile 3 specific GSD (1 analog input, PA)
pa139701.gsd	PA Profile 3 specific GSD (2 analog inputs, PA)
pa139702.gsd	PA Profile 3 specific GSD (3 analog inputs, PA)

** Represents a number that refers to the version of the .gsd file. For more information see Product compatibility (Page 15).

PROFIBUS DP GSD files

Filename	Description
si**81df.gsd	SITRANS LT500 specific GSD for DP
pa05B321.gsd	PA Profile 4 specific GSD for Level radar devices DP (Level, Distance)
pa039700.gsd	PA Profile 3 specific GSD (1 analog input, DP)
pa039701.gsd	PA Profile 3 specific GSD (2 analog inputs, DP)
pa039702.gsd	PA Profile 3 specific GSD (3 analog inputs, DP)

** Represents a number that refers to the version of the .gsd file. For more information see Product compatibility (Page 15).

C.3.2 Cyclic communication

Default slot configuration for PROFIBUS PA/DP

The table below shows the default configuration of LT500 when it is added to a PROFIBUS master configuration by the configuration tool, for example TIA Portal or Step7.

The "Level_1" module is already inserted and ready for data exchange. Slots marked "Not in cyclic data transfer_x" have no modules inserted which means they are not active in the cyclic data map.

Module	Slot
Level_1	<Level PT1>
Not in cyclic data transfer_1	<Distance PT1>
Not in cyclic data transfer_2	<Space PT1>
Not in cyclic data transfer_3	<Volume PT1>
Not in cyclic data transfer_4	<Head PT1>
Not in cyclic data transfer_5	<Vol. flow PT1>
Not in cyclic data transfer_6	<Sensor temp. PT1>
Not in cyclic data transfer_7	<Totalizer 1>
Not in cyclic data transfer_8	<Totalizer 2>
Not in cyclic data transfer_9	<Totalizer 3>
Not in cyclic data transfer_10	<Totalizer 4>
Not in cyclic data transfer_11	<Level PT2>
Not in cyclic data transfer_12	<Distance PT2>

Module	Slot
Not in cyclic data transfer_13	<Space PT2>
Not in cyclic data transfer_14	<Volume PT2>
Not in cyclic data transfer_15	<Head PT2>
Not in cyclic data transfer_16	<Vol. flow PT2>
Not in cyclic data transfer_17	<Sensor temp. PT2>
Not in cyclic data transfer_18	<Level difference>
Not in cyclic data transfer_19	<Level average>
Not in cyclic data transfer_20	<Auxiliary temperature>
Not in cyclic data transfer_21	<Relay outputs>

C.3.3 Module options

It is possible to create your own cyclic data map by replacing the "Not in cyclic data transfer_xx" module with a module from the list below.

Input module	Input	Data type	Output	Data type
Universal module			Not supported	
Not in cyclic data transfer			Insert into the slot if module is not used in cyclic data exchange.	
------ Process values -----				
Level	Byte 0 to 3 (Level)	Real		
	Byte 4 (SB)	Unsigned8		
Distance	Byte 0 to 3 (Distance)	Real		
	Byte 4 (SB)	Unsigned8		
Space	Byte 0 to 3 (Space)	Real		
	Byte 4 (SB)	Unsigned8		
Volume	Byte 0 to 3 (Volume)	Real		
	Byte 4 (SB)	Unsigned8		
Head	Byte 0 to 3 (Head)	Real		
	Byte 4 (SB)	Unsigned8		
Volume flow	Byte 0 to 3 (Volume flow)	Real		
	Byte 4 (SB)	Unsigned8		
Relay outputs	Byte 0 (Relay outputs 1 to 6)	Unsigned8		
	Byte 1 (SB)	Unsigned8		
Sensor temperature	Byte 0 to 3 (Sensor temperature)	Real		
	Byte 4 (SB)	Unsigned8		
Level difference	Byte 0 to 3 (Level difference)	Real		
	Byte 4 (SB)	Unsigned8		
Level average	Byte 0 to 3 (Level average)	Real		
	Byte 4 (SB)	Unsigned8		
Auxiliary temperature	Byte 0 to 3 (Auxiliary temperature)	Real		
	Byte 4 (SB)	Unsigned8		

Input module	Input	Data type	Output		Data type
------ Totalizers ------					
Volume total PT1	Byte 0 to 3 (Volume total)	Real			
	Byte 4 (SB)	Unsigned8			
Volume total PT1 set	Byte 0 to 3 (Volume total)	Real	Byte 0	1 = Reset 2 = Preset 3 = Hold 4 = Totalize	Unsigned8
	Byte 4 (SB)	Unsigned8	Byte 1		Unsigned8
Volume total PT1 (high resolution)	Byte 0 to 7 (Volume total)	Real64			
	Byte 8 (SB)	Unsigned8			
Volume total PT1 set (high resolution)	Byte 0 to 7 (Volume total)	Real64	Byte 0	1 = Reset 2 = Preset 3 = Hold 4 = Totalize	Unsigned8
	Byte 8 (SB)	Unsigned8	Byte 1		Unsigned8
Volume total PT2	Byte 0 to 3 (Volume total)	Real			
	Byte 4 (SB)	Unsigned8			
Volume total PT2 set	Byte 0 to 3 (Volume total)	Real	Byte 0	1 = Reset 2 = Preset 3 = Hold 4 = Totalize	Unsigned8
	Byte 4 (SB)	Unsigned8	Byte 1		Unsigned8
Volume total PT2 (high resolution)	Byte 0 to 7 (Volume total)	Real64			
	Byte 8 (SB)	Unsigned8			
Volume total PT2 set (high resolution)	Byte 0 to 7 (Volume total)	Real64	Byte 0	1 = Reset 2 = Preset 3 = Hold 4 = Totalize	Unsigned8
	Byte 8 (SB)	Unsigned8	Byte 1		Unsigned8
Pumped volume total PT1	Byte 0 to 3 (Pumped volume total)	Real			
	Byte 4 (SB)	Unsigned8			
Pumped volume total PT1 set	Byte 0 to 3 (Pumped volume total)	Real	Byte 0	1 = Reset 2 = Preset 3 = Hold 4 = Totalize	Unsigned8
	Byte 4 (SB)	Unsigned8	Byte 1		Unsigned8
Pumped volume total PT1 (high resolution)	Byte 0 to 7 (Pumped volume total)	Real64			
	Byte 8 (SB)	Unsigned8			
Pumped volume total PT1 set (high resolution)	Byte 0 to 7 (Pumped volume total)	Real64	Byte 0	1 = Reset 2 = Preset 3 = Hold 4 = Totalize	Unsigned8
	Byte 8 (SB)	Unsigned8	Byte 1		Unsigned8

Input module	Input	Data type	Output		Data type
Pumped volume total PT2	Byte 0 to 3 (Pumped volume total)	Real			
	Byte 4 (SB)	Unsigned8			
Pumped volume total PT2 set	Byte 0 to 3 (Pumped volume total)	Real	Byte 0	1 = Reset 2 = Preset 3 = Hold 4 = Totalize	Unsigned8
	Byte 4 (SB)	Unsigned8	Byte 1		Unsigned8
Pumped volume total PT2 (high resolution)	Byte 0 to 7 (Pumped volume total)	Real64			
	Byte 8 (SB)	Unsigned8			
Pumped volume total PT2 set (high resolution)	Byte 0 to 7 (Pumped volume total)	Real64	Byte 0	1 = Reset 2 = Preset 3 = Hold 4 = Totalize	Unsigned8
	Byte 8 (SB)	Unsigned8	Byte 1		Unsigned8

C.3.4 Status byte

The last byte of each value written/read from a module is called the "Status byte". The status byte indicates the status of the value preceding it.

Quality status

Bit								Hex value	Meaning	Priority
7	**6**	**5**	**4**	**3**	**2**	**1**	**0**			
0	0	0	0	0	0	X	X	00	BAD - non-specific	Highest
0	0	1	0	0	1	X	X	24	BAD - maintenance alarm, more diagnostics available	
0	0	1	0	1	0	X	X	28	BAD - process related, no maintenance	
0	1	1	1	1	0	X	X	78	UNCERTAIN – process related, no maintenance	
1	0	1	0	1	0	X	X	A8	GOOD - maintenance demanded	
1	0	1	0	0	1	X	X	A4	GOOD - maintenance required	
1	0	1	1	1	1	X	X	BC	GOOD - function check	
1	0	0	0	0	0	X	X	80	GOOD	Lowest
The following two bits could be additionally set in parallel to the quality codes above:										
X	X	X	X	X	X	1	X	02	Update event flag. Indicates that at least one parameter with attribute static has been modified.	
X	X	X	X	X	X	X	1	01	Simulation active	

The quality codes of the process values are affected by the global device status (physical block parameter DIAGNOSIS) in the following way (highest priority first):

Global alarm status	Quality code
Maintenance alarm	BAD - Maintenance alarm, more diagnostics available
Process value alarm	BAD - Process related, no maintenance
Process value warning	UNCERTAIN - Process related, no maintenance
Maintenance demanded	GOOD - Maintenance demanded
Maintenance required	GOOD - Maintenance required
Function check	GOOD - Function check
None of the above	GOOD

C.3.5 Diagnostics

A PROFIBUS master can request diagnostic information from the slave using the Diagnosis service. The slave will respond to a Slave_Diag request depending on its cyclic data exchange state and the currently used ident number that is determined by the GSD file.

Cyclic data exchange state	Used GSD	Diagnosis response	
		Content	Total length
Wait for parameterization WAIT-PRM	<any>	Standard diagnosis	6 bytes
Wait for configuration WAIT-CFG			
Cyclic data exchange DATA-EXCH	PA Profile 3 ident numbers pa039700.gsd/pa139700.gsd pa039701.gsd/pa139701.gsd pa039702.gsd/pa139702.gsd	Standard diagnosis	14 bytes
		DIAGNOSIS	
	PA Profile 4 GSD (Level radar) pa05B321.gsd/pa15B321.gsd	Standard diagnosis	29 bytes
		DIAGNOSIS	
		NE107_COMMON	
		NE107_RADAR	
	Device specific for SITRANS LT500 si**81de.gsd (PROFIBUS PA) si**81df.gsd (PROFIBUS DP)	Standard diagnosis	53 bytes
		DIAGNOSIS	
		NE107_COMMON	
		NE107_RADAR	
		Detailed alarm status (See tables below: "Sensor diagnostics" and "Transmitter diagnostics".)	

** Represents a number that refers to the version of the .gsd file. For more information see Product compatibility (Page 15).

The following table shows the content of the Diagnosis response sent from SITRANS LT500 upon a request from the master.

The first 6 bytes of the diagnostic response are defined by the PROFIBUS standard and are mandatory for all devices.

Byte	Element name	Description
0	Station_status_1	Information about the cyclic data exchange state and operation modes (sync, freeze)
1	Station_status_2	
2	Station_status_3	
3	Master_address	Master address of the master (Class 1) which has parameterized this slave. Value 255 if the slave has not been parameterized successfully for cyclic data exchange
4...5	PROFIBUS_ident	Currently used PROFIBUS ident number

SITRANS LT500 Device diagnostics		
Byte	**Element name**	**Description**
0	Header_octet	Length of the following diagnostic bytes including the Header_octet byte
1	Status_type	Fixed to 0xFE Highest manufacturer specific status used to specify the profile specific diagnostic information.
2	Slot_number	Fixed to 0 (slot of physical block)
3	Status_specifier	0: No further differentiation 1: Status appears 2: Status disappears

Content of the physical block parameter DIAGNOSIS		
Byte	**Bit**	**Description**
4	0 to 7	Reserved
5	0	Reserved
	1	Reserved
	2	Reserved
	3	Bit 3 warm start (restart)
	4	Bit 4 cold start (application reset)
	5	Bit 5 maintenance required
	6	Reserved
	7	Reserved
6	0	Maintenance alarm
	1	Maintenance demanded
	2	Function check
	3	Invalid process conditions
	4	Update event
	5	Reserved
	6	Reserved
	7	Reserved

Content of the physical block parameter DIAGNOSIS		
Byte	**Bit**	**Description**
7	0	Reserved
	1	Reserved
	2	Reserved
	3	Reserved
	4	Reserved
	5	Reserved
	6	Reserved
	7	More information available
8...13	NE107_COMMON	Content of the physical block parameter NE107_COMMON
14...22	NE107_RADAR (point 1)	In the current version of SITRANS LT500, NE107_RADAR is not supported so bytes 14 to 22 are set to 0

In the following tables, see Fault codes and corrective actions (Page 364) for details per fault code ID.

Sensor diagnostics			
Byte	**Bit**	**Description**	**Fault code ID**
23	0	PT1 - Sensor not found.	0
	1	PT1 - Sensor not supported.	1
	2	PT1 - Invalid device configuration.	2
	3	PT1 - Communication error.	3
	4	PT1 - Sensor security lock error.	4
	5	PT1 - Invalid pump configuration.	5
	6	PT1 - Low level cut-off active.	6
	7	PT1 - Sensor override active.	7
24	0	PT1 - Filling too quickly.	8
	1	PT1 - Emptying too quickly.	9
	2	PT1 - Sensor has changed.	10
	3	PT1 - Sensor input not calibrated.	11
	4	PT1 - Loss of echo.	12
	5	PT1 - Internal error in sensor.	13
	6	PT1 - Sensor failure.	14
	7	PT1 - Invalid primary measuring device (PMD) configuration.	15
25	0	PT1 - Sensor type mismatch.	16
	1	PT1 - Invalid application configuration.	17
	2	PT1 - Sensor input mode changed.	18
	3	PT1 - Sensor failure.	19
	4	PT1 - One or more process values with bad status.	20
	5	PT1 - Spill condition has been reached or is imminent. Stop filling vessel immediately.	21
	6	PT2 - Sensor not found.	22
	7	PT2 - Sensor not supported.	23

Sensor diagnostics			
Byte	**Bit**	**Description**	**Fault code ID**
26	0	PT2 - Invalid device configuration.	24
	1	PT2 - Communication error.	25
	2	PT2 - Sensor security lock error.	26
	3	PT2 - Invalid pump configuration.	27
	4	PT2 - Low level cut-off active.	28
	5	PT2 - Sensor override active.	29
	6	PT2 - Filling too quickly.	30
	7	PT2 - Emptying too quickly.	31
27	0	PT2 - Sensor has changed.	32
	1	PT2 - Sensor input not calibrated.	33
	2	PT2 - Loss of echo.	34
	3	PT2 - Internal error in sensor.	35
	4	PT2 - Sensor failure.	36
	5	PT2 - Invalid primary measuring device (PMD) configuration.	37
	6	PT2 - Sensor type mismatch.	38
	7	PT2 - Invalid application configuration.	39
28	0	PT2 - Sensor input mode change.	40
	1	PT2 - Sensor failure.	41
	2	PT2 - One or more process values with bad status.	42
	3	PT2 - Spill condition has been reached or is imminent. Stop filling vessel immediately.	43
	4…7	Not used	
29	0…7	Not used	
30	0	Internal error.	56
	1	Internal error.	57
	2	Internal error.	58
	3	Invalid relay configuration.	59
	4	Internal error. Restart the device. If the problem persists, contact Technical Support.	60
	5	Internal error. Restart the device. If the problem persists, contact Technical Support.	61
	6	Internal error. Restart the device. If the problem persists, contact Technical Support.	62
	7	Internal error. Restart the device. If the problem persists, contact Technical Support.	63

Transmitter diagnostics			
Byte	**Bit**	**Description**	**Fault code ID**
31	0	Device startup.	177
	1	Level (point 1) simulated.	388
	2	Level (point 1) above alarm limit.	320
	3	Level (point 1) above warning limit.	321
	4	Level (point 1) below warning limit.	322
	5	Level (point 1) below alarm limit.	323
	6	Level (point 1) out-of-bounds alarm.	384
	7	Level (point 1) in-bounds alarm.	385
32	0	Distance (point 1) above alarm limit.	328
	1	Distance (point 1) above warning limit.	329
	2	Distance (point 1) below warning limit.	330
	3	Distance (point 1) below alarm limit.	331
	4	Space (point 1) above alarm limit.	324
	5	Space (point 1) above warning limit.	325
	6	Space (point 1) below warning limit.	326
	7	Space (point 1) below alarm limit.	327
33	0	Volume (point 1) above alarm limit.	332
	1	Volume (point 1) above warning limit.	333
	2	Volume (point 1) below warning limit.	334
	3	Volume (point 1) below alarm limit.	335
	4	Head (point 1) above alarm limit.	336
	5	Head (point 1) above warning limit.	337
	6	Head (point 1) below warning limit.	338
	7	Head (point 1) below alarm limit.	339
34	0	Volume flow (point 1) above alarm limit.	100
	1	Volume flow (point 1) above warning limit.	101
	2	Volume flow (point 1) below warning limit.	102
	3	Volume flow (point 1) below alarm limit.	103
	4	Sensor temperature (point 1) above alarm limit.	108
	5	Sensor temperature (point 1) above warning limit.	109
	6	Sensor temperature (point 1) below warning limit.	110
	7	Sensor temperature (point 1) below alarm limit.	111
35	0	Level (point 2) simulated.	389
	1	Level (point 2) above alarm limit.	340
	2	Level (point 2) above warning limit.	341
	3	Level (point 2) below warning limit.	342
	4	Level (point 2) below alarm limit.	343
	5	Level (point 2) out-of-bounds alarm.	386
	6	Level (point 2) in-bounds alarm.	387
	7	Distance (point 2) above alarm limit.	348

Transmitter diagnostics			
Byte	**Bit**	**Description**	**Fault code ID**
36	0	Distance (point 2) above warning limit.	349
	1	Distance (point 2) below warning limit.	350
	2	Distance (point 2) below alarm limit.	351
	3	Space (point 2) above alarm limit.	344
	4	Space (point 2) above warning limit.	345
	5	Space (point 2) below warning limit.	346
	6	Space (point 2) below alarm limit.	347
	7	Volume (point 2) above alarm limit.	352
37	0	Volume (point 2) above warning limit.	353
	1	Volume (point 2) below warning limit.	354
	2	Volume (point 2) below alarm limit.	355
	3	Head (point 2) above alarm limit.	356
	4	Head (point 2) above warning limit.	357
	5	Head (point 2) below warning limit.	358
	6	Head (point 2) below alarm limit.	359
	7	Volume flow (point 2) above alarm limit.	360
38	0	Volume flow (point 2) above warning limit.	361
	1	Volume flow (point 2) below warning limit.	362
	2	Volume flow (point 2) below alarm limit.	363
	3	Sensor temperature (point 2) above alarm limit.	364
	4	Sensor temperature (point 2) above warning limit.	365
	5	Sensor temperature (point 2) below warning limit.	366
	6	Sensor temperature (point 2) below alarm limit.	367
	7	Level difference (point 2) above alarm limit.	368
39	0	Level difference (point 2) above warning limit.	369
	1	Level difference (point 2) below warning limit.	370
	2	Level difference (point 2) below alarm limit.	371
	3	Level average (point 2) above alarm limit.	372
	4	Level average (point 2) above warning limit.	373
	5	Level average (point 2) below warning limit.	374
	6	Level average (point 2) below alarm limit.	375
	7	Not used	
40	0…2	Not used	
	3	Totalizer 1 simulated.	167
	4	Totalizer 1 above alarm limit.	136
	5	Totalizer 1 above warning limit.	137
	6	Totalizer 1 below warning limit.	138
	7	Totalizer 1 below alarm limit.	139

Transmitter diagnostics			
Byte	**Bit**	**Description**	**Fault code ID**
41	0	Totalizer 2 simulated.	168
	1	Totalizer 2 above alarm limit.	140
	2	Totalizer 2 above warning limit.	141
	3	Totalizer 2 below warning limit.	142
	4	Totalizer 2 below alarm limit.	143
	5	Totalizer 3 simulated.	169
	6	Totalizer 3 above alarm limit.	144
	7	Totalizer 3 above warning limit.	145
42	0	Totalizer 3 below warning limit.	146
	1	Totalizer 3 below alarm limit.	147
	2	Totalizer 4 simulated.	165
	3	Totalizer 4 above alarm limit.	316
	4	Totalizer 4 above warning limit.	317
	5	Totalizer 4 below warning limit.	318
	6	Totalizer 4 below alarm limit.	319
	7	Transmitter electronics temperature too high.	148
43	0	Transmitter electronics temperature too low.	149
	1	Current output 1 - Loop current in lower saturation.	195
	2	Current output 1 - Loop current in upper saturation.	196
	3	Current output 1 simulated.	214
	4	Current output 2 - Loop current in lower saturation.	201
	5	Current output 2 - Loop current in upper saturation.	202
	6	Current output 2 simulated.	215
	7	Digital input 1 simulated.	312
44	0	Digital input 2 simulated.	313
	1	Output channels forced.	218
	2	Process values frozen.	217
	3	Data logging, <30 days remaining.	285
	4	Data logging, <7 days remaining.	286
	5	Data logging memory full.	287
	6	Memory card - Parameter backup disabled.	151
	7	Memory card (HART) - Parameter backup disabled.	152
45	0	Internal error.	180
	1	Memory card error.	181
	2	Communication card firmware incompatible.	182
	3	Transmitter firmware incompatible.	178
	4	Status signals simulated.	179
	5	Internal error in transmitter.	159
	6	Internal error.	150
	7	Transmitter firmware incompatible.	172

Transmitter diagnostics			
Byte	**Bit**	**Description**	**Fault code ID**
46	0	Sensor firmware incompatible.	173
	1	Firmware local operation incompatible.	174
	2	Maintenance required. Maintenance of device should be planned.	396
	3	Maintenance demanded. Maintenance of device should be planned.	397
	4	Maintenance required. Maintenance of device should be planned.	398
	5	Maintenance demanded. Maintenance of device should be planned.	399
	6	Maintenance required. Maintenance of device should be planned.	400
	7	Maintenance demanded. Maintenance of device should be planned.	401
47	0	PT1 - Maintenance required. Maintenance of sensor should be planned.	64
	1	PT1 - Maintenance demanded. Maintenance of sensor should be planned.	65
	2	PT1 - Echo profile storage memory is full. Clear echo profile storage memory.	66
	3	PT1 - Volume could not be calculated. One or more of parameters are set to invalid values. Review configuration values and adjust as necessary.	67
	4	Not used	
	5	Not used	
	6	Not used	
	7	Not used	
48	0	Not used	
	1	Not used	
	2	PT2 - Maintenance required. Maintenance of sensor should be planned.	74
	3	PT2 - Maintenance demanded. Maintenance of sensor should be planned.	75
	4	PT2 - Echo profile storage memory is full. Clear echo profile storage memory.	76
	5	PT2 - Volume could not be calculated. One or more of parameters are set to invalid values. Review configuration values and adjust as necessary.	77
	6	Not used	
	7	Not used	
49	0…7	Not used	
50	0…7	Not used	
51	0	Current output 1 - Configuration error. The configured fault current is within the measurement range. Correct settings.	411
	1	Current output 2 - Configuration error. The configured fault current is within the measurement range. Correct settings.	412
	2…7	Not used	

In the redundant PROFIBUS setup, the Prm_command_ack diagnosis structure could be appended to indicate a successful redundancy master switch over.

Byte	Element name	Description	
n + 0	Header_octet	Length of this diagnosis structure (= 8 bytes)	
n + 1	Status_type	Fixed to 0x9E = Prm_command_ack	
n + 2	Slot_number	Fixed to 0	
n + 3	Specifier	Copied from Prm_cmd	
n + 4	Function	Copied from Prm_cmd	
n + 5	Red_state_1	Bit 0:	Backup = 0
		Bit 1:	Primary = 1
		Bit 2:	HW-defect = 0
		Bit 3:	Data_exchange = X
		Bit 4:	Master_state_clear = 0
		Bit 5:	Baudrate found = 1
		Bit 6:	Toh started = 0
		Bit 7:	Reserved = 0
n + 6	Red_state_2	Fixed to 0	
n + 7	Red_state_3	Fixed to 0	

NE107_COMMON

The table below shows which bits of the NE107_COMMON parameters are supported and to which device specific alarms they are mapped.

NE107_COMMON				Mapped from fault code	
Byte	Bit	Description	Configurable	ID	Description
0	0	Sensor element exciter faulty	<Not supported>		
	1	Error in evaluation electron-ics	No	159	Internal error in transmitter.
				172	Transmitter firmware incompatible.
				173	Sensor firmware incompatible.
				174	Firmware local operation incompatible.
				178	Transmitter firmware incompatible.
				180	Failure of communication card or main board.
				181	Memory card error.
				182	Communication module firmware incompatible.
	2	Error in internal energy supply	<Not supported>		
	3	Error in sensor element			
	4	Error in actuator element			
	5	Faulty installation e.g. dead space			
	6	Parameter setting error	No		
	7	Signal path broken or short cut	No	150	Internal error.

NE107_COMMON				Mapped from fault code	
Byte	**Bit**	**Description**	**Configurable**	**ID**	**Description**
1	0	Overloading	<Not supported>		
	1	Wrong polarity of aux power			
	2	Maximum line length exceeded			
	3	Corrosion/abrasion by medium			
	4	Fouling on sensor element			
	5	Auxiliary medium missing or insufficient			
	6	Wear reserve used up (operation)			
	7	Wear reserve used up (wear)			
2	0	Error in peripherals			
	1	Electromagnetic interference too high			
	2	Temperature of medium too high	No		
	3	Ambient temperature too high	No	148	Transmitter electronics temperature too high.
	4	Vibration/Impact load too high	<Not supported>		
	5	Auxiliary power range off-spec			
	6	Auxiliary medium missing			
	7	Excessive temperature shock			
3	0	Deviation from measurement			
	1	Humidity in electronics area			
	2	Medium in electronics area			
	3	Mechanical damage			
	4	Communication error			
	5	Foreign material in electro area			
	6..7	<Reserved for future use>			
4..5	0..7	<Reserved for future use>			

C.3.6 Acyclic communication

Acyclic services

A complete list of all parameters which can be accessed in SITRANS LT500 via the slot index table can be found in SIOS.

SITRANS LT500 supports acyclic communication which allows the user to read and write parameters to the device via the slot index table. Write access to the slot index table is controlled by the access control manager.

The access control manager decides if the PROFIBUS master controller is allowed to modify device parameters. The general access control rules are:

- Each acyclic connection has an access level that can be changed by providing PIN information via the physical block parameter LOGIN_END_USER and/or LOGIN_SERVICE_USER.
- Each parameter has a protection level assigned that specifies the required access level to modify the parameter via an acyclic connection.
- If the access level of the acyclic connection is smaller than the protection level of the parameter that is desired to be modified, then the attempt to modify the parameter is rejected by the device.

The following access levels are provided:

Access level	Description
Restricted User Privilege (RUP)	Having this access level, the acyclic master/controller is not able to modify the device configuration (setup parameters). The master/controller is only able to execute commands, e.g. maintenance timers, start batch and reset totalizers.
End User Privilege (EUP)	Having this access level, the master/controller is able to modify a subset of the device configuration. The master/controller must provide the correct end user password to the physical block parameter LOGIN_END_USER to reach this access level. The initiator is a “normal” user in the plant not having access to critical parts of the configuration.
Service User Privilege (SUP)	Having this access level, the master/controller is able to modify the configuration of the device. The PROFIBUS master must provide the correct service user password to the physical block parameter LOGIN_SERVICE_USER to reach this access level. The initiator is either a service user at the plant (not Siemens service personnel) or Siemens service personnel.

C.3.7 Physical block - Access control

The user access level control is managed in the physical block in Slot 0.

To access the user access level control, the user must use acyclic communication to access the physical block.

DP index	DN index	Parameter name	Data type	R/W	Description	
69	0x0000	CURRENT_ACCESS_LEVEL	Unsigned8	R	Current access level of the acyclic connection. The access level is handled for each acyclic connection (MSAC1 and each MSAC2) independently.	
					0...1:	Reserved
					2:	Restricted User Privilege (RUP)
					3:	End User Privilege (EUP)
					4:	Service User Privilege (SUP)
					5...255:	Reserved
					Initial access level for an acyclic connection defaults to restricted user privilege (option 2).	
					0...1:	Reserved
					2:	Restricted User Privilege (RUP)
					3:	End User Privilege (EUP)

DP index	DN index	Parameter name	Data type	R/W	Description	
70	0x0001	DEFAULT_ACCESS_ LEVEL	Unsigned8	R,W	4...255:	Reserved
71	0x0002	LOGIN_END_USER	Unsigned16	R,W	Input of the end user PIN to change the current ACCESS_LEVEL of the acyclic connection. Valid range 0...9999 Reading this parameter indicates if end user privilege is granted (1) or not (0). Note that Service user privilege includes End user privilege.	
72	0X0003	LOGIN_SERVICE_USER	Unsigned16	R,W	Input of the service user PIN to change the current ACCESS_LEVEL of the acyclic connection. Valid range 0...9999 Reading this parameter indicates if service user privilege is granted (1) or not (0).	

C.4 PROFINET

SITRANS LT500 with the addition of a PROFINET communication card allows communication with a PROFINET I/O controller. LT500 supports both cyclic and acyclic communication from an I/O controller or I/O supervisor.

LT500 supports the PA Profile 4.1 for process automation.

C.4.1 GSDML files

To allow SITRANS LT500 to operate on a PROFINET network, a GSDML file is required. The GSDML file must be loaded into the PROFINET configuration tool as part of the system configuration.

PROFINET GSDML

Filename	Description
gsdml-v2.35-sitrans_lt00-0b10-20210622.xml	SITRANS LT500 specific GSD for PROFINET, FW version: 1.02.00
gsdml-v2.4-sitrans_lt00-0b10-20200701.xml	SITRANS LT500 specific GSD for PROFINET, FW version: 1.01.00

C.4.2 PROFINET device setup

Ethernet devices always communicate using their unique MAC address. In a PROFINET I/O system each field device receives a device name that uniquely identifies the field device within the I/O system. This name is used for relating the IP address to the MAC address of the field device.

Device name

To enable cyclic communication between SITRANS LT500 and the I/O controller, SITRANS LT500 requires a device name: the default device name from the factory is left empty.

The device name needs to be entered into the PROFINET I/O controller via a configuration tool such as TIA Portal, Step7 Classic, PRONETA, or third party tool that supports the DCP protocol.

For example in TIA Portal, SITRANS LT500 is added to the project from the device catalog and its device name is assigned by either letting TIA Portal generate the device name from the GSDML file, or by using the device name that you enter in the device name field.

Scanning for SITRANS LT500 on the network

In TIA Portal, Step7, PRONETA, or third party configuration tool, it is possible to scan the PROFINET network to find available devices. The network scan will identify SITRANS LT500 by its MAC address.

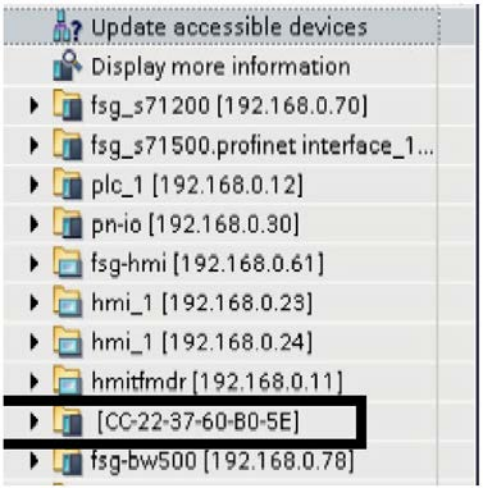

If required, the name can be changed by entering the new name into the properties of the SITRANS LT500 project, in the "PROFINET device name" field.

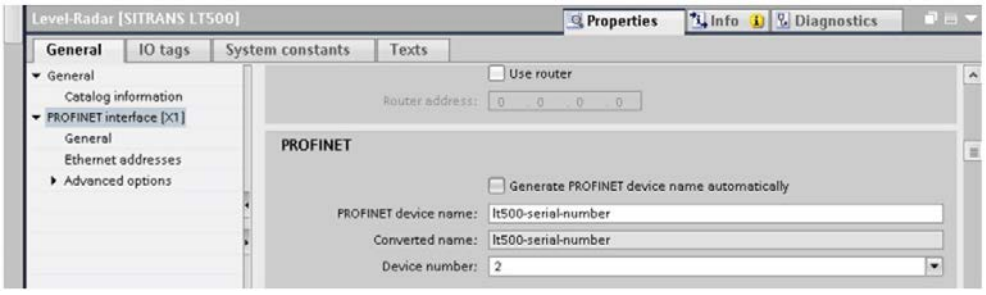

Ensure that the device name matches the device name set in your PROFINET I/O controller or SITRANS LT500 will not establish communication with the I/O controller.

PROFINET network settings

To set the network settings, IP address, subnet mask, and gateway you can use TIA Portal, Step7 Classic, PRONETA, or third party PROFINET configuration tool supporting the DCP protocol.

In TIA Portal you can either enter the network settings in the project or directly in the device from the network scan.

C.4.3 Cyclic communication

Default slot configuration for PROFINET

The table below shows the default slot configuration of SITRANS LT500 when it is added to a PROFINET I/O controller configuration.

The first 7 slots are preset with "Level_1, Distance_1, Space_1, Volume_1, Head_1, Volume flow_1, Sensor temperature_1" modules already inserted and ready for data exchange. The remaining slots have no modules inserted which means they are not active in the cyclic data map.

Module	Slot
Level_1	<Level PT1>
Distance_1	<Distance PT1>
Space_1	<Space PT1>
Volume_1	<Volume PT1>
Head_1	<Head PT1>
Volume flow_1	<Vol. flow PT1>
Sensor temperature_1	<Sensor temp. PT1>
	<Totalizer 1>
	<Totalizer 2>
	<Totalizer 3>
	<Totalizer 4>
	<Level PT2>
	<Distance PT2>
	<Space PT2>
	<Volume PT2>
	<Head PT2>
	<Vol. flow PT2>
	<Sensor temp. PT2>
	<Level difference>
	<Level average>
	<Auxiliary temperature>
	<Relay outputs>

C.4.4 Module options

It is possible to create your own cyclic data map by replacing the "Not in cyclic data transfer_xx" module with a module from the list below.

Input module	Input	Data type	Output		Data type
------ Process values -----					
Level	Byte 0 to 3 (Level)	Real			
	Byte 4 (SB)	Unsigned8			
Distance	Byte 0 to 3 (Distance)	Real			
	Byte 4 (SB)	Unsigned8			
Space	Byte 0 to 3 (Space)	Real			
	Byte 4 (SB)	Unsigned8			
Volume	Byte 0 to 3 (Volume)	Real			
	Byte 4 (SB)	Unsigned8			
Head	Byte 0 to 3 (Head)	Real			
	Byte 4 (SB)	Unsigned8			
Volume flow	Byte 0 to 3 (Volume flow)	Real			
	Byte 4 (SB)	Unsigned8			
Relay outputs	Byte 0 (Relay outputs 1 to 6)	Unsigned8			
	Byte 1 (SB)	Unsigned8			
Sensor temperature	Byte 0 to 3 (Sensor temperature)	Real			
	Byte 4 (SB)	Unsigned8			
Level difference	Byte 0 to 3 (Level difference)	Real			
	Byte 4 (SB)	Unsigned8			
Level average	Byte 0 to 3 (Level average)	Real			
	Byte 4 (SB)	Unsigned8			
Auxiliary temperature	Byte 0 to 3 (Auxiliary temperature)	Real			
	Byte 4 (SB)	Unsigned8			
------ Totalizers ------					
Volume total PT1	Byte 0 to 3 (Volume total)	Real			
	Byte 4 (SB)	Unsigned8			
Volume total PT1 set	Byte 0 to 3 (Volume total)	Real	Byte 0	1 = Reset 2 = Preset 3 = Hold 4 = Totalize	Unsigned8
	Byte 4 (SB)	Unsigned8	Byte 1		Unsigned8
Volume total PT1 (high resolution)	Byte 0 to 7 (Volume total)	Real64			
	Byte 8 (SB)	Unsigned8			
Volume total PT1 set (high resolution)	Byte 0 to 7 (Volume total)	Real64	Byte 0	1 = Reset 2 = Preset 3 = Hold 4 = Totalize	Unsigned8
	Byte 8 (SB)	Unsigned8	Byte 1		Unsigned8
Volume total PT2	Byte 0 to 3 (Volume total)	Real			
	Byte 4 (SB)	Unsigned8			

Input module	Input	Data type	Output		Data type
Volume total PT2 set	Byte 0 to 3 (Volume total)	Real	Byte 0	1 = Reset 2 = Preset 3 = Hold 4 = Totalize	Unsigned8
	Byte 4 (SB)	Unsigned8	Byte 1		Unsigned8
Volume total PT2 (high resolution)	Byte 0 to 7 (Volume total)	Real64			
	Byte 8 (SB)	Unsigned8			
Volume total PT2 set (high resolution)	Byte 0 to 7 (Volume total)	Real64	Byte 0	1 = Reset 2 = Preset 3 = Hold 4 = Totalize	Unsigned8
	Byte 8 (SB)	Unsigned8	Byte 1		Unsigned8
Pumped volume total PT1	Byte 0 to 3 (Pumped volume total)	Real			
	Byte 4 (SB)	Unsigned8			
Pumped volume total PT1 set	Byte 0 to 3 (Pumped volume total)	Real	Byte 0	1 = Reset 2 = Preset 3 = Hold 4 = Totalize	Unsigned8
	Byte 4 (SB)	Unsigned8	Byte 1		Unsigned8
Pumped volume total PT1 (high resolution)	Byte 0 to 7 (Pumped volume total)	Real64			
	Byte 8 (SB)	Unsigned8			
Pumped volume total PT1 set (high resolution)	Byte 0 to 7 (Pumped volume total)	Real64	Byte 0	1 = Reset 2 = Preset 3 = Hold 4 = Totalize	Unsigned8
	Byte 8 (SB)	Unsigned8	Byte 1		Unsigned8
Pumped volume total PT2	Byte 0 to 3 (Pumped volume total)	Real			
	Byte 4 (SB)	Unsigned8			
Pumped volume total PT2 set	Byte 0 to 3 (Pumped volume total)	Real	Byte 0	1 = Reset 2 = Preset 3 = Hold 4 = Totalize	Unsigned8
	Byte 4 (SB)	Unsigned8	Byte 1		Unsigned8
Pumped volume total PT2 (high resolution)	Byte 0 to 7 (Pumped volume total)	Real64			
	Byte 8 (SB)	Unsigned8			
Pumped volume total PT2 set (high resolution)	Byte 0 to 7 (Pumped volume total)	Real64	Byte 0	1 = Reset 2 = Preset 3 = Hold 4 = Totalize	Unsigned8
	Byte 8 (SB)	Unsigned8	Byte 1		Unsigned8

C.4.5 Status byte

The last byte of each value written/read from a module is called the "Status byte". The status byte indicates the status of the value preceding it.

Quality status

Bit								Hex value	Meaning	Priority
7	**6**	**5**	**4**	**3**	**2**	**1**	**0**			
0	0	0	0	0	0	X	X	00	BAD - non-specific	Highest
0	0	1	0	0	1	X	X	24	BAD - maintenance alarm, more diagnostics available	
0	0	1	0	1	0	X	X	28	BAD - process related, no maintenance	
0	1	1	1	1	0	X	X	78	UNCERTAIN – process related, no maintenance	
1	0	1	0	1	0	X	X	A8	GOOD - maintenance demanded	
1	0	1	0	0	1	X	X	A4	GOOD - maintenance required	
1	0	1	1	1	1	X	X	BC	GOOD - function check	
1	0	0	0	0	0	X	X	80	GOOD	Lowest
The following two bits could be additionally set in parallel to the quality codes above:										
X	X	X	X	X	X	1	X	02	Update event flag. Indicates that at least one parameter with attribute static has been modified.	
X	X	X	X	X	X	X	1	01	Simulation active	

The quality codes of the process values are affected by the global device status (physical block parameter DIAGNOSIS) in the following way (highest priority first):

Global alarm status	Quality code
Maintenance alarm	BAD - Maintenance alarm, more diagnostics available
Process value alarm	BAD - Process related, no maintenance
Process value warning	UNCERTAIN - Process related, no maintenance
Maintenance demanded	GOOD - Maintenance demanded
Maintenance required	GOOD - Maintenance required
Function check	GOOD - Function check
None of the above	GOOD

C.4.6 Diagnostics

In addition to the status byte, SITRANS LT500 provides extensive diagnostics via PROFINET.

LT500 is designed in accordance with PA Profile 4.1 for process control devices, which means that SITRANS LT500 only supports qualified channel diagnostics.

When a diagnostic occurs the relevant channel and slot information identifies which module has generated the diagnostic.

The diagnostic response will report information about SITRANS LT500 and its connected sensor.

	Module	Module ID	Sub slot ident	Sub slot number
SITRANS LT500		0x00FD0000		
	Interface		0x00000100	0x8000
	Port		0x00000101	0x8001
	DAP		0x00000001	0.1
	Device management		0x00000002	0.2
	Device settings		0x000101FA	0.3
	Measurement settings		0x00030407	0.4
	Transducer block point 2		0x000380FA	0.5
	Level	0x00021E01		1
	Distance	0x00021F01		1
	Space	0x0002E601		1
	Volume	0x00022801		1
	Head	0x0002E701		1
	Auxiliary temperature	0x00020701		1
	Level difference	0x0002E801		1
	Level average	0x0002E901		1
	Sensor temperature	0x00020501		1
	Volume flow	0x00023C01		1
	Totalizer volume PT1	0x00029601	0x02029601	1
	Totalizer volume with control PT1	0x03029601	0x03029601	1
	Totalizer volume double PT1	0x02029701	0x02029701	1
	Totalizer volume double with control PT1	0x03029701	0x03029701	1
	Totalizer volume PT2	0x00029601	0x0C029601	1
	Totalizer volume with control PT2	0x00029601	0x0D029601	1
	Totalizer volume double PT2	0x00029701	0x0C029701	1
	Totalizer volume double with control PT2	0x00029701	0x0D029701	1
	Pumped volume PT1	0x00029601	0x0E029601	1
	Pumped volume with control PT1	0x00029601	0x0F029601	1
	Pumped volume double PT1	0x00029701	0x0E29701	1
	Pumped volume double with control PT1	0x00029701	0x0F029701	1
	Pumped volume PT2	0x00029601	0x10029684	1
	Pumped volume with control PT2	0x00029601	0x11029684	1
	Pumped volume double PT2	0x10029701	0x10029784	1
	Pumped volume double with control PT2	0x00029701	0x11029784	1
	Relay outputs	0x0002BE01		1

Global device information

Vendor	Siemens AG
Vendor ID	0x002A
Main family	PA profiles
Product family	Level
Device ID	0x0B10
Information	SITRANS LT500
IM profile ID	0x9700

Sensor and transmitter diagnostics

For sensor and transmitter diagnostics, the fault code ID shown on the I/O controller or I/O supervisor matches the ID number minus 1000, shown in the "Diagnostics and troubleshooting" chapter.

For example, ID 1002 shown on the I/O controller refers to ID 2 (1002-1000=2) in the device fault code table.

Refer to this table Fault codes and corrective actions (Page 364) for detailed diagnostic information.

Device specific

Profile 4.1 specific, physical block parameter diagnostics		
PROFINET channel error number	**Diagnosis**	**Description**
37579 (0x92CB)	Warm start	Reserved by PI, Fixed to 0
37580 (0x92CC)	Cold start	Reserved by PI, Fixed to 0
37581 (0x92CD)	Maintenance required	Maintenance required
37584 (0x92D0)	Maintenance alarm	Failure of the device
37585 (0x92D1)	Maintenance demanded	Maintenance demanded
37586 (0x92D2)	Function check	Device is in function mode or in simulation or under local control e.g. maintenance
37587 (0x92D3)	Out of specification	The process conditions do not allow returning valid values. (Set if a value has the quality "Uncertain" - Process related, no maintenance, or "Bad" - Process related, no maintenance.)
37588 (0x92D4)	Update event	Shows the status of the update event flag.
36865 (0x9001)	Error in evaluation electronics	1. Restart device. 2. Check if failure recurs. 3. Replacement is recommended.
36883 (0x9013)	Ambient temperature too high	Check that the device is operated within its specifications.

NE107_COMMON

In addition, SITRANS LT500 supports NAMUR NE107_COMMON diagnostics. The table below shows which bits of the NE107_COMMON parameters are supported and to which device specific alarms they are mapped.

NE107_COMMON				Mapped from fault code	
Byte	**Bit**	**Description**	**Configurable**	**ID**	**Description**
0	0	Sensor element exciter faulty	<Not supported>		
	1	Error in evaluation electronics	No	1159	Internal error in transmitter.
				1172	Transmitter firmware incompatible.
				1173	Sensor firmware incompatible.
				1174	Firmware local operation incompatible.
				1178	Transmitter firmware incompatible.
				1180	Failure of communication card or main board.
				1181	Memory card error.
				1182	Communication module firmware incompatible.
	2	Error in internal energy supply	<Not supported>		
	3	Error in sensor element			
	4	Error in actuator element			
	5	Faulty installation e.g. dead space			
	6	Parameter setting error	No		
	7	Signal path broken or short cut	No	1150	Internal error.
1	0	Overloading	<Not supported>		
	1	Wrong polarity of auxiliary power			
	2	Maximum line length exceeded			
	3	Corrosion/abrasion by medium			
	4	Fouling on sensor element			
	5	Auxiliary medium missing or insufficient			
	6	Wear reserve used up (operation)			
	7	Wear reserve used up (wear)			

NE107_COMMON				Mapped from fault code	
Byte	**Bit**	**Description**	**Configurable**	**ID**	**Description**
2	0	Error in peripherals			
	1	Electromagnetic interference too high			
	2	Temperature of medium too high	No		
	3	Ambient temperature too high	No	1148	Transmitter electronics temperature too high.
	4	Vibration/Impact load too high	<Not supported>		
	5	Auxiliary power range off-spec			
	6	Auxiliary medium missing			
	7	Excessive temperature shock			
3	0	Deviation from measurement			
	1	Humidity in electronics area			
	2	Medium in electronics area			
	3	Mechanical damage			
	4	Communication error			
	5	Foreign material in electronics area			
	6..7	<Reserved for future use>			
4..5	0..7	<Reserved for future use>			

C.4.7 Acyclic communication

Acyclic services

A complete list of all parameters which can be accessed in SITRANS LT500 via the slot index table can be found in SIOS.

SITRANS LT500 supports acyclic communication which allows the user to read and write parameters to the device via the slot index table. Write access to the slot index table is controlled by the access control manager.

The access control manager decides if the PROFINET I/O controller or I/O supervisor is allowed to modify device parameters. The general access control rules are:

- Each acyclic connection has an access level that can be changed by providing PIN information via the physical block parameter LOGIN_END_USER and/or LOGIN_SERVICE_USER.
- Each parameter has a protection level assigned that specifies the required access level to modify the parameter via an acyclic connection.
- If the access level of the acyclic connection is smaller than the protection level of the parameter that is desired to be modified, then the attempt to modify the parameter is rejected by the device.

The following access levels are provided:

Access level	Description
Restricted User Privilege (RUP)	Having this access level, the acyclic I/O controller or I/O supervisor is not able to modify the device configuration (setup parameters). The I/O controller or I/O supervisor is only able to execute commands, e.g. maintenance timers, start batch and reset totalizers.
End User Privilege (EUP)	Having this access level, the I/O controller or I/O supervisor is able to modify a subset of the device configuration. The I/O controller or I/O supervisor must provide the correct end user password to the physical block parameter LOGIN_END_USER to reach this access level. The initiator is a “normal” user in the plant not having access to critical parts of the configuration.
Service User Privilege (SUP)	Having this access level, the I/O controller or I/O supervisor is able to modify the configuration of the device. The PROFINET I/O controller or I/O supervisor must provide the correct service user password to the physical block parameter LOGIN_SERVICE_USER to reach this access level. The initiator is either a service user at the plant (not Siemens service personnel) or Siemens service personnel.

C.4.8 Physical block - Access control

The user access level control is managed in the physical block in Slot 3.

To access the user access level control, the user must use acyclic communication to access the physical block.

index	Parameter name	Data type	R/W	Description	
0x0000	CURRENT_ACCESS_LEVEL	Unsigned8	R	Current access level of the acyclic connection. The access level is handled for each acyclic connection (MSAC1 and each MSAC2) independently.	
				0...1:	Reserved
				2:	Restricted User Privilege (RUP)
				3:	End User Privilege (EUP)
				4:	Service User Privilege (SUP)
				5...255:	Reserved
0x0001	DEFAULT_ACCESS_LEVEL	Unsigned8	R,W	Initial access level for an acyclic connection defaults to restricted user privilege (option 2).	
				0...1:	Reserved
				2:	Restricted User Privilege (RUP)
				3:	End User Privilege (EUP)
				4...255:	Reserved
0x0002	LOGIN_END_USER	Unsigned16	R,W	Input of the end user PIN to change the current ACCESS_LEVEL of the acyclic connection. Valid range 0...9999 Reading this parameter indicates if end user privilege is granted (1) or not (0). Note that Service user privilege includes End user privilege.	
0X0003	LOGIN_SERVICE_USER	Unsigned16	R,W	Input of the service user PIN to change the current ACCESS_LEVEL of the acyclic connection. Valid range 0...9999 Reading this parameter indicates if service user privilege is granted (1) or not (0).	

Remote operation

D

D.1 Overview of device configuration software

There are currently two competing technologies for configuring field devices:

- Electronic Device Description Language (EDDL)-based software
- Field Device Tool / Device Type Manager (FDT/DTM)-based software

From a practical point of view, both EDDL and FDT/DTM solutions do the same thing: provide a way of reading and writing configuration parameters to field devices and viewing advanced diagnostics.

Note

- SIMATIC PDM (an EDDL-based software) configures a field device using the Electronic Device Description (EDD) for that device.
- PACTware and Fieldcare (FDT-based software) use the DTM for that field device.

D.2 SIMATIC PDM

SIMATIC PDM is a software package used to commission and maintain process devices. Please consult the operating instructions or online help for details on using SIMATIC PDM.

D.2.1 SIMATIC PDM Version

Check the support page of our website to make sure you have the latest version of SIMATIC PDM, the most recent Service Pack (SP) and the most recent hot fix (HF). Go to:

Software downloads (https://www.siemens.com/processinstrumentation/downloads)

In the Product tree, navigate to: "**Automation Technology > Process control systems > SIMATIC PCS 7 > SIMATIC PCS 7 system software > Plant Device Management > SIMATIC PDM**".

D.2.2 Initial setup

To ensure that SIMATIC PDM connects properly, complete the following two processes:

1. Deactivate buffers
2. Update the Electronic Device Description (EDD)

D.2.2.1 Deactivating buffers

This deactivation is required to align SIMATIC PDM with the HART modem when using a Windows® operating systems. Windows® is a registered trademark of the Microsoft Corporation.

Note

Connecting via serial port

- Deactivating buffers is only necessary when connecting via RS232 (COM1) as opposed to USB.
- You will need administrative rights on your operating system to deactivate buffers.
- Check SIMATIC PDM installation documentation for hardware and software requirements.

1. From the computer desktop, click "**Start > Control Panel**" to begin configuration.
2. Click "**System and Security**", then select "**Device Manager**" under "**System**".
3. Open folder "**Ports**" and double click the COM Port used by the system to open the properties window.
4. Select the tab "**Port Settings**" tab and click the "**Advanced**" button.
5. If the "**Use FIFO buffers**" radio box is selected, click to deselect.

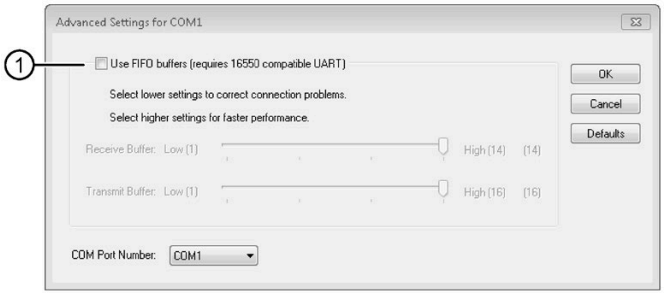

① Deselect **Use FIFO buffers** radio box

6. Click **OK** to close out. Close all screens and then restart the computer.

D.2.3 Updating Electronic Device Description (EDD)

You can locate the EDD in Device Catalog, under "**Sensors > Level > Echo > Siemens AG > SITRANS LT500**".

To install a new EDD:

1. Note the most current EDD revision that is compatible with the Firmware revision in the device, according to the table in section Product compatibility (Page 15).
2. Go to the support page Software downloads (https://www.siemens.com/processinstrumentation/downloads).
3. Enter the product name in the field "Enter search term...".
4. Download the EDD of your device.

5. Save files to your computer in an easily accessed location.
6. Launch **SIMATIC PDM – Device Integration Manager**.
   From the File menu, click "Read device descriptions from compressed source...".
7. Browse to the zipped EDD file, select and open it.
8. Use the "Integration" function to integrate the EDD into the device catalog. The EDD is now accessible via **SIMATIC Manager**.

D.2.3.1 Configuring a new device

Note

Configuring device via SIMATIC PDM

- Clicking "Cancel" button during an upload from device to SIMATIC PDM will result in *some* parameters being updated.
- **Application guides** for setting up HART devices with SIMATIC PDM are available. They can be found under **Support**. Go to:
  Product page (www.siemens.com/sitransLT500)

1. Check that you have the most recent EDD that supports the FW version of your device, and if necessary update it. See Updating Electronic Device Description (EDD) (Page 472).
2. Launch **SIMATIC Manager** and create a new project for the device.
3. Open the menu "**Device > Restore setup** > **Restore ordered configuration**". Select "**Yes**" button and click "**Ok"** to perform a reset to settings based on the ordered configuration.
4. After the restore is complete upload parameters to the PC/PG.
5. Configure the device via the quick start wizard (see PDM "Device" menu).

D.2.4 Changing parameter settings using SIMATIC PDM

SIMATIC PDM monitors the process values, alarms and status signals of the device. It allows you to display, compare, adjust, verify, and simulate process device data; also to set schedules for calibration and maintenance.

Parameters in SIMATIC PDM are identified by name and organized into function groups, similar to the structure of the local display (HMI).

Within SIMATIC PDM, parameters can be found in a structured view (which can be accessed when the device is offline), or in the PDM menus (when device is online): Device, View, Diagnostics.

See:

- Parameters via PDM structure view (Page 474)
- Parameters and methods via PDM menus (Page 475)

Note

- Clicking button "Cancel" during an upload from device to SIMATIC PDM will result in *some* parameters being updated.
- While the device is in **Edit view** the output remains active and continues to respond to changes in the device.

1. Launch SIMATIC PDM, connect to device, and upload data from device.
2. Adjust parameter values in the parameter value field then press "Enter" key. The status fields read "Changed".
3. Open the Device menu, click "Download to device...". When complete, use "**File** > **Save**" to save settings offline. The status fields are cleared.

D.2.5 Parameters via PDM structure view

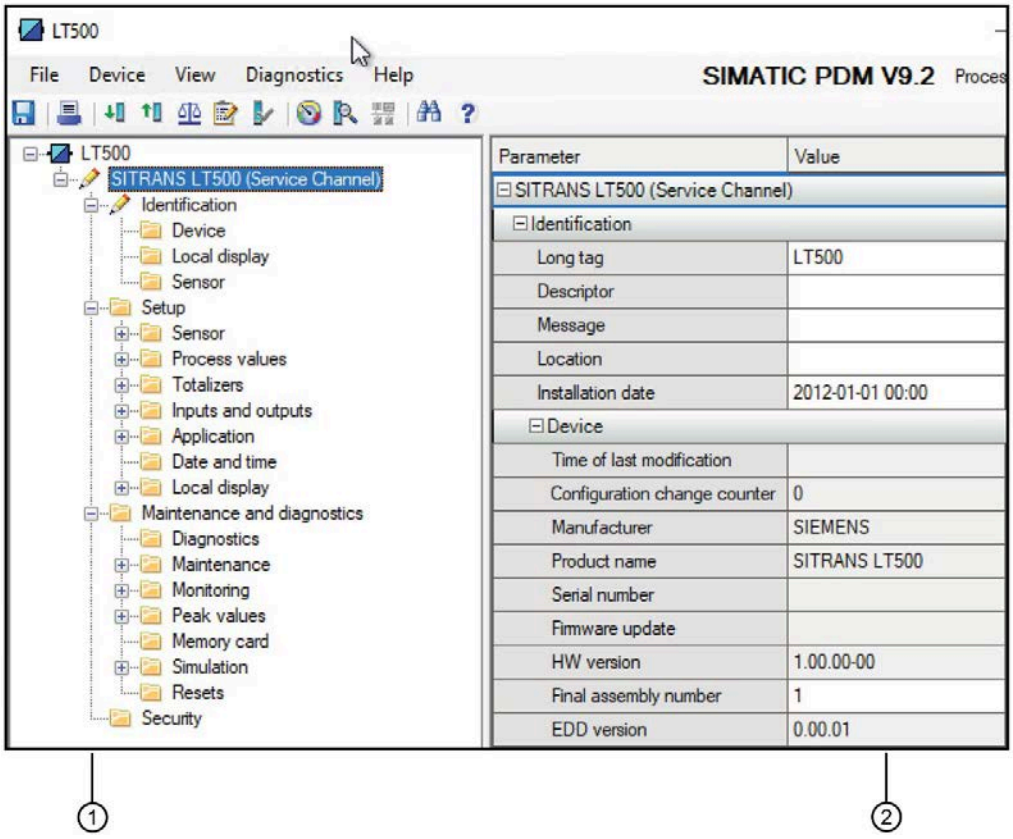

① Structure view (offline table)

② Parameter value fields

Most parameters accessible via local operation on the device are also available via PDM.

Note

Parameters accessible via HMI

- For a complete list of parameters accessible via local operation see HMI menu structure (Page 478).

If a parameter is not available in the PDM structure view, refer to the PDM menus: Parameters and methods via PDM menus (Page 475).

Note that the device language can be set under the menu "Local display" in the PDM structure view, and all commissioning wizards are available on the "Device" menu in SIMATIC PDM.

D.2.6 Parameters and methods via PDM menus

Click on **Device**, **View**, or **Diagnostics** to open the associated PDM menu.

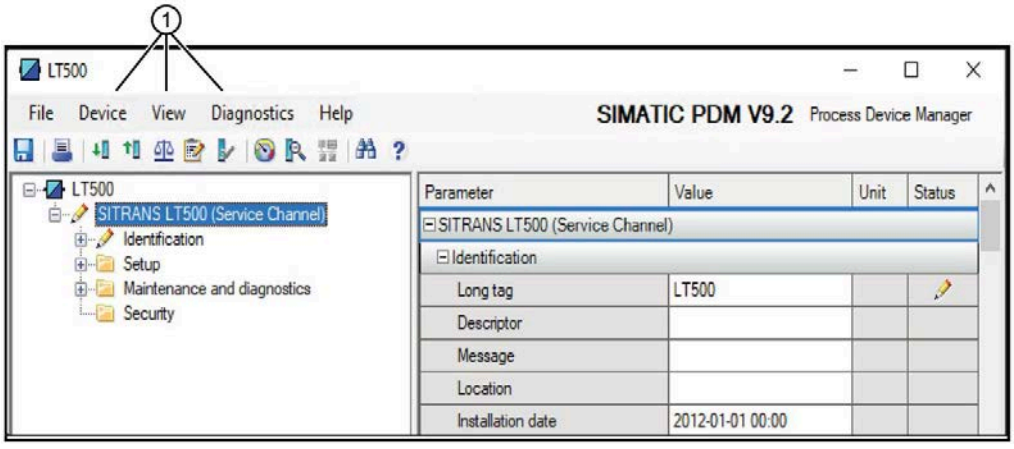

① PDM menus (Device, View, Diagnostics)

Device		**View**	**Diagnostics**
Download to device Upload to PC/PG		Process values	Update diagnostics...
Assign address and TAG... Value comparison... Object properties... Calibration log... Change Log... Set device checked...		Start Life List...	Diagnostics Device status
Check configuration... Templates			
Wizard - Units ** Wizard - Quick start... Wizard - Pump control... Wizard - Basic control... Wizard - Alarms... * Zero head offset Auto sound velocity Custom tables			
Simulation Totalizers Maintenance Audit trail Echo profile utilities	> Process values Totalizers Inputs and outputs Alarms and diagnostics > Operating time Scheduled maintenance > Parameter change log FW update change log Diagnostic log		
Security			
Restore setup Peak values	> Create restore point Restore Delete restore point Restore ordered configuration Restore auto saved configuration		
Device restart			

** Units should be set as a first step, using the Units wizard in SIMATIC PDM, unlike local operation where units are set as part of the quick commissioning wizard.

* Note that in SIMATIC PDM (unlike local operation), the Alarms wizard must be repeated for each alarm source, i.e. repeat the wizard for each process value and for Sensor diagnostics, as required for the application.

D.3 FDT (Field Device Tool)

FDT is a standard used in several software packages designed to commission and maintain field devices. Two commercially available FDTs are PACTware and Fieldcare.

FDT is very similar to PDM:

- To configure a field device via FDT, you need the DTM (Device Type Manager) for the device.
- To configure a field device via SIMATIC PDM, you need the EDD (Electronic Data Description) for the device.

Startup and configuration

To start up the device using an FDT, you must first install the DTM (see below). You can then configure the device using the parameters available with the FDT.

Device Type Manager (DTM)

A DTM is a type of software that *plugs into* FDT. It contains the same information as an EDD but an EDD is independent of the operating system.

SITRANS DTM

- SITRANS DTM is an EDDL interpreter developed by Siemens to interpret the EDD for that device.
- To use SITRANS DTM to connect to a device, you must first install SITRANS DTM on your system and then install the device EDD written for SITRANS DTM.
- You can download SITRANS DTM from our website. Go to website (http://www.siemens.com/sitransdtm) and click "**Support > Software downloads**".

Electronic Device Description (EDD)

The device EDD for SITRANS DTM can be downloaded from the product page of our website.

Go to Product page (www.siemens.com/sitransLT500).

Click "**Support > Software downloads**".

Configuring a new device

The full process to configure a field device via FDT is outlined in an application guide for SITRANS DTM, which can be downloaded from the product page of our website.

Go to Product page (www.siemens.com/sitransLT500).

Click "**Support > Application guides**".

HMI menu structure

E

Note

Parameter visibility on device

All available device menus and parameters are included in the following HMI menu structure, each with its own identifying number (with the exception of wizard parameters). The menu/parameter number shown in the HMI menu structure will match the menu/parameter number that appears on the device. However, note that some menus and parameters are only visible on the device based on configuration settings.

Note

Navigating menus

Use the local buttons (4) on the device to navigate in parameter view. For instructions see Local display (HMI) (Page 103).

For detailed information on Quick start parameters see Local commissioning (Page 55).

For detailed information on all other parameters see Parameter assignment (Page 193).

- 1 Quick start
  - 1.1 Quick commissioning
    - About
    - Measurement point 1
      - Level
        - Length units
        - Sensor type
        - Current at lower calibration point
        - Current at upper calibration point
        - Lower calibration point
        - Upper calibration point
        - Next
        - Response rate
        - Material type
        - Next
        - Apply?
      - Space
        - Length units
        - Sensor type
        - Current at lower calibration point
        - Current at upper calibration point
        - Lower calibration point
        - Upper calibration point
        - Next
        - Response rate
        - Material type
        - Next
        - Apply?
      - Distance
        - Length units
        - Sensor type
        - Current at lower calibration point
        - Current at upper calibration point
        - Lower calibration point
        - Upper calibration point
        - Next
        - Response rate
        - Material type
        - Next
        - Apply?
      - Volume
        - Length units
        - Volume units
        - Next
        - Sensor type
        - Current at lower calibration point
        - Current at upper calibration point
        - Lower calibration point
        - Upper calibration point
        - Next
        - Response rate
        - Material type
        - Next
        - Vessel shape
        - Vessel dimension A
        - Vessel dimension L
        - Maximum volume
        - Next
        - Apply?
      - Volume flow
        - Length units
        - Volume flow units
        - Volume units
        - Next
        - Sensor type
        - Current at lower calibration point
        - Current at upper calibration point
        - Lower calibration point
        - Upper calibration point
        - Next
        - Response rate
        - Material type
        - Primary measuring device
        - Method of flow calculation
        - <PMD dimension 1>
        - <PMD dimension 2>
        - <PMD dimension 3>
        - <PMD dimension 4>
        - Next
        - Flow exponent
        - K-factor
        - V-notch angle
        - Slope
        - Roughness coefficient
        - Next
        - Maximum head
        - Zero head offset
        - Maximum flow
        - Low flow cut-off
        - Next
        - Apply?
    - Measurement point 2
    - <<repeated as above in Measurement point 1>>
    - Exit
  - 1.2 Pump control
    - About
    - Measurement point 1
      - Relays currently assigned
      - Number of pumps
      - Pump control mode
      - Pump 1 <per pump>
      - Service ratio pump 1 <per pump>
      - Run time pump 1 <per pump>
      - On setpoint pump 1 <per pump>
      - Off setpoint pump 1 <per pump>
      - Next
      - Apply?
    - Measurement point 2
    - <<repeated as above in Measurement point 1>>
    - Exit

1.3 Basic control
About
Select control source
Exit
Control relays
Next
On/off setpoints
On setpoint relay 1
Off setpoint relay 1
Next
Apply?
1.4 Alarms
About
Measurement point 1
Alarm sources
Next
Enable alarms
Next
<Level> limits <per process value>
Upper alarm limit
Lower alarm limit
Upper warning limit
Lower warning limit
Hysteresis
Next
Configure relays?
Relays currently assigned
Alarm relays
Next
Alarms for relay x <per relay>
Next
Apply?
Measurement point 2
<<repeated as above in Measurement point 1>>
Exit

2 Setup
2.1 Sensor
2.1.1 Type
2.1.2 Frequency
2.1.3 Input mode
2.1.4 Enter PIN
2.1.5 Material type
2.1.6 Calibration
2.1.6.1 Lower calibration point
2.1.6.2 Upper calibration point
2.1.6.3 Current at lower calibration point
2.1.6.4 Current at upper calibration point
2.1.6.5 Lower level point
2.1.6.6 Upper level point
2.1.6.7 Level offset
2.1.6.8 Sensor offset
2.1.6.9 Near range
2.1.6.10 Far range
2.1.6.11 Auto sound velocity wizard
Actual distance
2.1.6.12 Distance
2.1.6.13 Auto sound velocity wizard error
2.1.7 Fail-safe LOE timer
2.1.8 Rate
2.1.8.1 Rate of change
2.1.8.2 Fill rate indicator limit
2.1.8.3 Empty rate indicator limit
2.1.8.4 Fill rate alarm limit
2.1.8.5 Empty rate alarm limit
2.1.8.6 Fill rate limit
2.1.8.7 Empty rate limit
2.1.8.8 Sensor damping value
2.1.9 Auto false echo suppression
2.1.9.1 Mode
2.1.9.2 Range
2.1.9.3 Learn
2.1.9.4 Enable
2.1.9.5 Disable
2.1.10 Custom TVT shaper mode
2.1.11 Custom TVT breakpoints
2.1.11.1 Breakpoint 1
2.1.11.2 Breakpoint 2
2.1.11.3 Breakpoint 3
2.1.11.4 Breakpoint 4
2.1.11.5 Breakpoint 5
2.1.11.6 Breakpoint 6
2.1.11.7 Breakpoint 7
2.1.11.8 Breakpoint 8
2.1.11.9 Breakpoint 9
2.1.11.10 Breakpoint 10
2.1.11.11 Breakpoint 11
2.1.11.12 Breakpoint 12
2.1.11.13 Breakpoint 13
2.1.11.14 Breakpoint 14
2.1.11.15 Breakpoint 15
2.1.11.16 Breakpoint 16
2.1.11.17 Breakpoint 17
2.1.11.18 Breakpoint 18
2.1.11.19 Breakpoint 19
2.1.11.20 Breakpoint 20
2.1.11.21 Breakpoint 21
2.1.11.22 Breakpoint 22
2.1.11.23 Breakpoint 23
2.1.11.24 Breakpoint 24
2.1.11.25 Breakpoint 25
2.1.11.26 Breakpoint 26
2.1.11.27 Breakpoint 27
2.1.11.28 Breakpoint 28
2.1.11.29 Breakpoint 29
2.1.11.30 Breakpoint 30
2.1.11.31 Breakpoint 31
2.1.11.32 Breakpoint 32
2.1.11.33 Breakpoint 33
2.1.11.34 Breakpoint 34
2.1.11.35 Breakpoint 35
2.1.11.36 Breakpoint 36
2.1.11.37 Breakpoint 37
2.1.11.38 Breakpoint 38
2.1.11.39 Breakpoint 39
2.1.11.40 Breakpoint 40

2.1.12 Sensor override input
2.1.13 Sensor override value
2.1.14 Sensor override time delay
2.1.15 Enable low level cut-off
2.1.16 Low level cut-off
2.1.17 Preconfigured
2.1.18 Enable diagnostics
2.1.19 Select fail-safe diagnostics
2.1.20 Measurement point 2
2.1.20.1 Type
2.1.20.3 Input mode
2.1.20.4 Enter PIN
2.1.20.5 Material type
2.1.20.6 Calibration
2.1.20.6.1 Lower calibration point
2.1.20.6.2 Upper calibration point
2.1.20.6.3 Current at lower calibration point
2.1.20.6.4 Current at upper calibration point
2.1.20.6.5 Lower level point
2.1.20.6.6 Upper level point
2.1.20.6.7 Level offset
2.1.20.6.8 Sensor offset
2.1.20.6.9 Near range
2.1.20.6.10 Far range
2.1.20.6.11 Auto sound velocity wizard
Actual distance
2.1.20.6.12 Distance
2.1.20.6.13 Auto sound velocity wizard error
2.1.20.7 Fail-safe LOE timer
2.1.20.8 Rate
2.1.20.8.1 Rate of change
2.1.20.8.2 Fill rate indicator limit
2.1.20.8.3 Empty rate indicator limit
2.1.20.8.4 Fill rate alarm limit
2.1.20.8.5 Empty rate alarm limit
2.1.20.8.6 Fill rate limit
2.1.20.8.7 Empty rate limit
2.1.20.8.8 Sensor damping value
2.1.20.9 Auto false echo suppression
2.1.20.9.1 Mode
2.1.20.9.2 Range
2.1.20.9.3 Learn
2.1.20.9.4 Enable
2.1.20.9.5 Disable
2.1.20.10 Custom TVT shaper mode
2.1.20.11 Custom TVT breakpoints
2.1.20.11.1 Breakpoint 1
2.1.20.11.2 Breakpoint 2
2.1.20.11.3 Breakpoint 3
2.1.20.11.4 Breakpoint 4
2.1.20.11.5 Breakpoint 5
2.1.20.11.6 Breakpoint 6
2.1.20.11.7 Breakpoint 7
2.1.20.11.8 Breakpoint 8
2.1.20.11.9 Breakpoint 9
2.1.20.11.10 Breakpoint 10
2.1.20.11.11 Breakpoint 11
2.1.20.11.12 Breakpoint 12
2.1.20.11.13 Breakpoint 13
2.1.20.11.14 Breakpoint 14
2.1.20.11.15 Breakpoint 15
2.1.20.11.16 Breakpoint 16
2.1.20.11.17 Breakpoint 17
2.1.20.11.18 Breakpoint 18
2.1.20.11.19 Breakpoint 19
2.1.20.11.20 Breakpoint 20
2.1.20.11.21 Breakpoint 21
2.1.20.11.22 Breakpoint 22
2.1.20.11.23 Breakpoint 23
2.1.20.11.24 Breakpoint 24
2.1.20.11.25 Breakpoint 25
2.1.20.11.26 Breakpoint 26
2.1.20.11.27 Breakpoint 27
2.1.20.11.28 Breakpoint 28
2.1.20.11.29 Breakpoint 29
2.1.20.11.30 Breakpoint 30
2.1.20.11.31 Breakpoint 31
2.1.20.11.32 Breakpoint 32
2.1.20.11.33 Breakpoint 33
2.1.20.11.34 Breakpoint 34
2.1.20.11.35 Breakpoint 35
2.1.20.11.36 Breakpoint 36
2.1.20.11.37 Breakpoint 37
2.1.20.11.38 Breakpoint 38
2.1.20.11.39 Breakpoint 39
2.1.20.11.40 Breakpoint 40
2.1.20.12 Sensor override input
2.1.20.13 Sensor override value
2.1.20.14 Sensor override time delay
2.1.20.15 Enable low level cut-off
2.1.20.16 Low level cut-off
2.1.20.17 Preconfigured
2.1.20.18 Enable diagnostics
2.1.20.19 Select fail-safe diagnostics
2.2 Process values
2.2.1 Level (point 1)
2.2.1.1 Units
2.2.1.2 Decimal places
2.2.1.3 Enable diagnostics
2.2.1.4 Upper alarm limit
2.2.1.5 Upper warning limit
2.2.1.6 Lower warning limit
2.2.1.7 Lower alarm limit
2.2.1.8 Hysteresis
2.2.2 Space (point 1)
2.2.2.1 Units
2.2.2.2 Decimal places
2.2.2.3 Enable diagnostics
2.2.2.4 Upper alarm limit
2.2.2.5 Upper warning limit
2.2.2.6 Lower warning limit
2.2.2.7 Lower alarm limit
2.2.2.8 Hysteresis

2.2.3 Distance (point 1)
- 2.2.3.1 Units
- 2.2.3.2 Decimal places
- 2.2.3.3 Enable diagnostics
- 2.2.3.4 Upper alarm limit
- 2.2.3.5 Upper warning limit
- 2.2.3.6 Lower warning limit
- 2.2.3.7 Lower alarm limit
- 2.2.3.8 Hysteresis

2.2.4 Head (point 1)
- 2.2.4.1 Units
- 2.2.4.2 Decimal places
- 2.2.4.3 Enable diagnostics
- 2.2.4.4 Upper alarm limit
- 2.2.4.5 Upper warning limit
- 2.2.4.6 Lower warning limit
- 2.2.4.7 Lower alarm limit
- 2.2.4.8 Hysteresis

2.2.5 Volume (point 1)
- 2.2.5.1 Units
- 2.2.5.2 Custom units
- 2.2.5.3 Custom conversion factor
- 2.2.5.4 Decimal places
- 2.2.5.5 Enable diagnostics
- 2.2.5.6 Upper alarm limit
- 2.2.5.7 Upper warning limit
- 2.2.5.8 Lower warning limit
- 2.2.5.9 Lower alarm limit
- 2.2.5.10 Hysteresis

2.2.6 Volume flow (point 1)
- 2.2.6.1 Units
- 2.2.6.2 Custom units
- 2.2.6.3 Custom conversion factor
- 2.2.6.4 Decimal places
- 2.2.6.5 Enable diagnostics
- 2.2.6.6 Upper alarm limit
- 2.2.6.7 Upper warning limit
- 2.2.6.8 Lower warning limit
- 2.2.6.9 Lower alarm limit
- 2.2.6.10 Hysteresis

2.2.7 Sensor temperature (point 1)
- 2.2.7.1 Units
- 2.2.7.2 Decimal places
- 2.2.7.3 Enable diagnostics
- 2.2.7.4 Upper alarm limit
- 2.2.7.5 Upper warning limit
- 2.2.7.6 Lower warning limit
- 2.2.7.7 Lower alarm limit
- 2.2.7.8 Hysteresis

2.2.8 Level (point 2)
- 2.2.8.1 Units
- 2.2.8.2 Decimal places
- 2.2.8.3 Enable diagnostics
- 2.2.8.4 Upper alarm limit
- 2.2.8.5 Upper warning limit
- 2.2.8.6 Lower warning limit
- 2.2.8.7 Lower alarm limit
- 2.2.8.8 Hysteresis

2.2.9 Space (point 2)
- 2.2.9.1 Units
- 2.2.9.2 Decimal places
- 2.2.9.3 Enable diagnostics
- 2.2.9.4 Upper alarm limit
- 2.2.9.5 Upper warning limit
- 2.2.9.6 Lower warning limit
- 2.2.9.7 Lower alarm limit
- 2.2.9.8 Hysteresis

2.2.10 Distance (point 2)
- 2.2.10.1 Units
- 2.2.10.2 Decimal places
- 2.2.10.3 Enable diagnostics
- 2.2.10.4 Upper alarm limit
- 2.2.10.5 Upper warning limit
- 2.2.10.6 Lower warning limit
- 2.2.10.7 Lower alarm limit
- 2.2.10.8 Hysteresis

2.2.11 Head (point 2)
- 2.2.11.1 Units
- 2.2.11.2 Decimal places
- 2.2.11.3 Enable diagnostics
- 2.2.11.4 Upper alarm limit
- 2.2.11.5 Upper warning limit
- 2.2.11.6 Lower warning limit
- 2.2.11.7 Lower alarm limit
- 2.2.11.8 Hysteresis

2.2.12 Volume (point 2)
- 2.2.12.1 Units
- 2.2.12.2 Decimal places
- 2.2.12.3 Enable diagnostics
- 2.2.12.4 Upper alarm limit
- 2.2.12.5 Upper warning limit
- 2.2.12.6 Lower warning limit
- 2.2.12.7 Lower alarm limit
- 2.2.12.8 Hysteresis

2.2.13 Volume flow (point 2)
- 2.2.13.1 Units
- 2.2.13.2 Decimal places
- 2.2.13.3 Enable diagnostics
- 2.2.13.4 Upper alarm limit
- 2.2.13.5 Upper warning limit
- 2.2.13.6 Lower warning limit
- 2.2.13.7 Lower alarm limit
- 2.2.13.8 Hysteresis

2.2.14 Sensor temperature (point 2)
- 2.2.14.1 Units
- 2.2.14.2 Decimal places
- 2.2.14.3 Enable diagnostics
- 2.2.14.4 Upper alarm limit
- 2.2.14.5 Upper warning limit
- 2.2.14.6 Lower warning limit
- 2.2.14.7 Lower alarm limit
- 2.2.14.8 Hysteresis

- 2.2.15 Level difference
  - 2.2.15.1 Units
  - 2.2.15.2 Decimal places
  - 2.2.15.3 Enable diagnostics
  - 2.2.15.4 Upper alarm limit
  - 2.2.15.5 Upper warning limit
  - 2.2.15.6 Lower warning limit
  - 2.2.15.7 Lower alarm limit
  - 2.2.15.8 Hysteresis
- 2.2.16 Level average
  - 2.2.16.1 Units
  - 2.2.16.2 Decimal places
  - 2.2.16.3 Enable diagnostics
  - 2.2.16.4 Upper alarm limit
  - 2.2.16.5 Upper warning limit
  - 2.2.16.6 Lower warning limit
  - 2.2.16.7 Lower alarm limit
  - 2.2.16.8 Hysteresis
- 2.3 Totalizers
  - 2.3.1 Totalizer 1
    - 2.3.1.1 Process value
    - 2.3.1.2 Units
    - 2.3.1.4 Custom units
    - 2.3.1.5 Custom conversion factor
    - 2.3.1.6 Decimal places
    - 2.3.1.8 Fail-safe behavior
    - 2.3.1.9 Reset
    - 2.3.1.10 Preset value
    - 2.3.1.11 Preset
    - 2.3.1.12 Limit monitoring
      - 2.3.1.12.1 Enable diagnostics
      - 2.3.1.12.2 Upper alarm limit
      - 2.3.1.12.3 Upper warning limit
      - 2.3.1.12.4 Lower warning limit
      - 2.3.1.12.5 Lower alarm limit
      - 2.3.1.12.6 Hysteresis
    - 2.3.1.13 Daily reset (at midnight)
    - 2.3.1.14 Auto reset
    - 2.3.1.15 Auto reset limit
  - 2.3.2 Totalizer 2
    - 2.3.2.1 Process value
    - 2.3.2.2 Units
    - 2.3.2.4 Custom units
    - 2.3.2.5 Custom conversion factor
    - 2.3.2.6 Decimal places
    - 2.3.2.8 Fail-safe behavior
    - 2.3.2.9 Reset
    - 2.3.2.10 Preset value
    - 2.3.2.11 Preset
    - 2.3.2.12 Limit monitoring
      - 2.3.2.12.1 Enable diagnostics
      - 2.3.2.12.2 Upper alarm limit
      - 2.3.2.12.3 Upper warning limit
      - 2.3.2.12.4 Lower warning limit
      - 2.3.2.12.5 Lower alarm limit
      - 2.3.2.12.6 Hysteresis
    - 2.3.2.13 Daily reset (at midnight)
    - 2.3.2.14 Auto reset
    - 2.3.2.15 Auto reset limit
  - 2.3.3 Totalizer 3
    - 2.3.3.1 Process value
    - 2.3.3.2 Units
    - 2.3.3.4 Custom units
    - 2.3.3.5 Custom conversion factor
    - 2.3.3.6 Decimal places
    - 2.3.3.8 Fail-safe behavior
    - 2.3.3.9 Reset
    - 2.3.3.10 Preset value
    - 2.3.3.11 Preset
    - 2.3.3.12 Limit monitoring
      - 2.3.3.12.1 Enable diagnostics
      - 2.3.3.12.2 Upper alarm limit
      - 2.3.3.12.3 Upper warning limit
      - 2.3.3.12.4 Lower warning limit
      - 2.3.3.12.5 Lower alarm limit
      - 2.3.3.12.6 Hysteresis
    - 2.3.3.13 Daily reset (at midnight)
    - 2.3.3.14 Auto reset
    - 2.3.3.15 Auto reset limit
  - 2.3.4 Totalizer 4
    - 2.3.4.1 Process value
    - 2.3.4.2 Units
    - 2.3.4.4 Custom units
    - 2.3.4.5 Custom conversion factor
    - 2.3.4.6 Decimal places
    - 2.3.4.8 Fail-safe behavior
    - 2.3.4.9 Reset
    - 2.3.4.10 Preset value
    - 2.3.4.11 Preset
    - 2.3.4.12 Limit monitoring
      - 2.3.4.12.1 Enable diagnostics
      - 2.3.4.12.2 Upper alarm limit
      - 2.3.4.12.3 Upper warning limit
      - 2.3.4.12.4 Lower warning limit
      - 2.3.4.12.5 Lower alarm limit
      - 2.3.4.12.6 Hysteresis
    - 2.3.4.13 Daily reset (at midnight)
    - 2.3.4.14 Auto reset
    - 2.3.4.15 Auto reset limit
  - 2.3.5 Reset all totalizers
- 2.4 Inputs and outputs
  - 2.4.1 Current output (HART)
    - 2.4.1.1 Loop current mode
    - 2.4.1.2 Loop current scale
    - 2.4.1.3 Active operation
    - 2.4.1.4 Process value
    - 2.4.1.6 Upper range value
    - 2.4.1.7 Lower range value
    - 2.4.1.8 Damping value
    - 2.4.1.9 Fail-safe behavior
    - 2.4.1.10 Fail-safe behavior activation condition
    - 2.4.1.11 Fail-safe behavior suppression time
    - 2.4.1.12 Fail-safe behavior minimum duration
    - 2.4.1.13 Fail-safe value
    - 2.4.1.14 Forced value
    - 2.4.1.15 Enable diagnostics

2.4.2 Current output 1
2.4.2.2 Loop current scale
2.4.2.4 Process value
2.4.2.6 Upper range value
2.4.2.7 Lower range value
2.4.2.8 Damping value
2.4.2.9 Fail-safe behavior
2.4.2.10 Fail-safe behavior activation condition
2.4.2.11 Fail-safe beahavior suppression time
2.4.2.12 Fail-safe behavior minimum duration
2.4.2.13 Fail-safe value
2.4.2.14 Forced value
2.4.2.15 Enable diagnostics
2.4.3 Current output 2
2.4.3.2 Loop current scale
2.4.3.4 Process value
2.4.3.6 Upper range value
2.4.3.7 Lower range value
2.4.3.8 Damping value
2.4.3.9 Fail-safe behavior
2.4.3.10 Fail-safe behavior activation condition
2.4.3.11 Fail-safe behavior suppression time
2.4.3.12 Fail-safe behavior minimum duration
2.4.3.13 Fail-safe value
2.4.3.14 Forced value
2.4.3.15 Enable diagnostics
2.4.4 Digital input 1
2.4.4.1 Input function
2.4.4.2 Polarity
2.4.5 Digital input 2
2.4.5.1 Input function
2.4.5.2 Polarity
2.4.6 Relay output 1
2.4.6.1 Mode
2.4.6.2 Status signals
2.4.6.3 Sensor diagnostics
2.4.6.3.1 Measurement point 1
2.4.6.3.2 Measurement point 2
2.4.6.4 Process diagnostics
2.4.6.4.1 Level (point 1)
2.4.6.4.2 Space (point 1)
2.4.6.4.3 Distance (point 1)
2.4.6.4.4 Head (point 1)
2.4.6.4.5 Volume (point 1)
2.4.6.4.6 Volume flow (point 1)
2.4.6.4.7 Sensor temperature (point 1)
2.4.6.4.8 Level (point 2)
2.4.6.4.9 Space (point 2)
2.4.6.4.10 Distance (point 2)
2.4.6.4.11 Head (point 2)
2.4.6.4.12 Volume (point 2)
2.4.6.4.13 Volume flow (point 2)
2.4.6.4.14 Sensor temperature (point 2)
2.4.6.4.15 Level difference
2.4.6.4.16 Level average
2.4.6.5 Totalizer alarms
2.4.6.5.1 Totalizer 1
2.4.6.5.2 Totalizer 2
2.4.6.5.3 Totalizer 3
2.4.6.5.4 Totalizer 4
2.4.6.6 Input and output diagnostics
2.4.6.6.1 Current output (HART)
2.4.6.6.2 Current output 1
2.4.6.6.3 Current output 2
2.4.6.7 Memory card diagnostics
2.4.6.7.1 Data logging
2.4.6.8 Process value
2.4.6.9 Units
2.4.6.10 Amount
2.4.6.11 Interval
2.4.6.12 Fail-safe behavior
2.4.6.13 Fail-safe behavior source
2.4.6.14 Polarity
2.4.6.15 On-delay
2.4.6.16 Off-delay
2.4.6.17 Forced value
2.4.7 Relay output 2
2.4.7.1 Mode
2.4.7.2 Status signals
2.4.7.3 Sensor diagnostics
2.4.7.3.1 Measurement point 1
2.4.7.3.2 Measurement point 2
2.4.7.4 Process diagnostics
2.4.7.4.1 Level (point 1)
2.4.7.4.2 Space (point 1)
2.4.7.4.3 Distance (point 1)
2.4.7.4.4 Head (point 1)
2.4.7.4.5 Volume (point 1)
2.4.7.4.6 Volume flow (point 1)
2.4.7.4.7 Sensor temperature (point 1)
2.4.7.4.8 Level (point 2)
2.4.7.4.9 Space (point 2)
2.4.7.4.10 Distance (point 2)
2.4.7.4.11 Head (point 2)
2.4.7.4.12 Volume (point 2)
2.4.7.4.13 Volume flow (point 2)
2.4.7.4.14 Sensor temperature (point 2)
2.4.7.4.15 Level difference
2.4.7.4.16 Level average
2.4.7.5 Totalizer alarms
2.4.7.5.1 Totalizer 1
2.4.7.5.2 Totalizer 2
2.4.7.5.3 Totalizer 3
2.4.7.5.4 Totalizer 4
2.4.7.6 Input and output diagnostics
2.4.7.6.1 Current output (HART)
2.4.7.6.2 Current output 1
2.4.7.6.3 Current output 2
2.4.7.7 Memory card diagnostics
2.4.7.7.1 Data logging

2.4.7.8 Process value
2.4.7.9 Units
2.4.7.10 Amount
2.4.7.11 Interval
2.4.7.12 Fail-safe behavior
2.4.7.13 Fail-safe behavior source
2.4.7.14 Polarity
2.4.7.15 On-delay
2.4.7.16 Off-delay
2.4.7.17 Forced value
2.4.8 Relay output 3
2.4.8.1 Mode
2.4.8.2 Status signals
2.4.8.3 Sensor diagnostics
2.4.8.3.1 Measurement point 1
2.4.8.3.2 Measurement point 2
2.4.8.4 Process alarms
2.4.8.4.1 Level (point 1)
2.4.8.4.2 Space (point 1)
2.4.8.4.3 Distance (point 1)
2.4.8.4.4 Head (point 1)
2.4.8.4.5 Volume (point 1)
2.4.8.4.6 Volume flow (point 1)
2.4.8.4.7 Sensor temperature (point 1)
2.4.8.4.8 Level (point 2)
2.4.8.4.9 Space (point 2)
2.4.8.4.10 Distance (point 2)
2.4.8.4.11 Head (point 2)
2.4.8.4.12 Volume (point 2)
2.4.8.4.13 Volume flow (point 2)
2.4.8.4.14 Sensor temperature (point 2)
2.4.8.4.15 Level difference
2.4.8.4.16 Level average
2.4.8.5 Totalizer alarms
2.4.8.5.1 Totalizer 1
2.4.8.5.2 Totalizer 2
2.4.8.5.3 Totalizer 3
2.4.8.5.4 Totalizer 4
2.4.8.6 Input and output diagnostics
2.4.8.6.1 Current output (HART)
2.4.8.6.2 Current output 1
2.4.8.6.3 Current output 2
2.4.8.7 Memory card diagnostics
2.4.8.7.1 Data logging
2.4.8.8 Process value
2.4.8.9 Units
2.4.8.10 Amount
2.4.8.11 Interval
2.4.8.12 Fail-safe behavior
2.4.8.13 Fail-safe behavior source
2.4.8.14 Polarity
2.4.8.15 On-delay
2.4.8.16 Off-delay
2.4.8.17 Forced value
2.4.9 Relay output 4
2.4.9.1 Mode
2.4.9.2 Status signals
2.4.9.3 Sensor diagnostics
2.4.9.3.1 Measurement point 1
2.4.9.3.2 Measurement point 2
2.4.9.4 Process alarms
2.4.9.4.1 Level (point 1)
2.4.9.4.2 Space (point 1)
2.4.9.4.3 Distance (point 1)
2.4.9.4.4 Head (point 1)
2.4.9.4.5 Volume (point 1)
2.4.9.4.6 Volume flow (point 1)
2.4.9.4.7 Sensor temperature (point 1)
2.4.9.4.8 Level (point 2)
2.4.9.4.9 Space (point 2)
2.4.9.4.10 Distance (point 2)
2.4.9.4.11 Head (point 2)
2.4.9.4.12 Volume (point 2)
2.4.9.4.13 Volume flow (point 2)
2.4.9.4.14 Sensor temperature (point 2)
2.4.9.4.15 Level difference
2.4.9.4.16 Level average
2.4.9.5 Totalizer alarms
2.4.9.5.1 Totalizer 1
2.4.9.5.2 Totalizer 2
2.4.9.5.3 Totalizer 3
2.4.9.5.4 Totalizer 4
2.4.9.6 Input and output diagnostics
2.4.9.6.1 Current output (HART)
2.4.9.6.2 Current output 1
2.4.9.6.3 Current output 2
2.4.9.7 Memory card diagnostics
2.4.9.7.1 Data logging
2.4.9.8 Process value
2.4.9.9 Units
2.4.9.10 Amount
2.4.9.11 Interval
2.4.9.12 Fail-safe behavior
2.4.9.13 Fail-safe behavior source
2.4.9.14 Polarity
2.4.9.15 On-delay
2.4.9.16 Off-delay
2.4.9.17 Forced value
2.4.10 Relay output 5
2.4.10.1 Mode
2.4.10.2 Status signals
2.4.10.3 Sensor diagnostics
2.4.10.3.1 Measurement point 1
2.4.10.3.2 Measurement point 2
2.4.10.4 Process alarms
2.4.10.4.1 Level (point 1)
2.4.10.4.2 Space (point 1)
2.4.10.4.3 Distance (point 1)
2.4.10.4.4 Head (point 1)
2.4.10.4.5 Volume (point 1)
2.4.10.4.6 Volume flow (point 1)
2.4.10.4.7 Sensor temperature (point 1)

2.4.10.4.8 Level (point 2)
2.4.10.4.9 Space (point 2)
2.4.10.4.10 Distance (point 2)
2.4.10.4.11 Head (point 2)
2.4.10.4.12 Volume (point 2)
2.4.10.4.13 Volume flow (point 2)
2.4.10.4.14 Sensor temperature (point 2)
2.4.10.4.15 Level difference
2.4.10.4.16 Level average
2.4.10.5 Totalizer alarms
2.4.10.5.1 Totalizer 1
2.4.10.5.2 Totalizer 2
2.4.10.5.3 Totalizer 3
2.4.10.5.4 Totalizer 4
2.4.10.6 Input and output diagnostics
2.4.10.6.1 Current output (HART)
2.4.10.6.2 Current output 1
2.4.10.6.3 Current output 2
2.4.10.7 Memory card diagnostics
2.4.10.7.1 Data logging
2.4.10.8 Process value
2.4.10.9 Units
2.4.10.10 Amount
2.4.10.11 Interval
2.4.10.12 Fail-safe behavior
2.4.10.13 Fail-safe behavior source
2.4.10.14 Polarity
2.4.10.15 On-delay
2.4.10.16 Off-delay
2.4.10.17 Forced value
2.4.11 Relay output 6
2.4.11.1 Mode
2.4.11.2 Status signals
2.4.11.3 Sensor diagnostics
2.4.11.3.1 Measurement point 1
2.4.11.3.2 Measurement point 2
2.4.11.4 Process alarms
2.4.11.4.1 Level (point 1)
2.4.11.4.2 Space (point 1)
2.4.11.4.3 Distance (point 1)
2.4.11.4.4 Head (point 1)
2.4.11.4.5 Volume (point 1)
2.4.11.4.6 Volume flow (point 1)
2.4.11.4.7 Sensor temperature (point 1)
2.4.11.4.8 Level (point 2)
2.4.11.4.9 Space (point 2)
2.4.11.4.10 Distance (point 2)
2.4.11.4.11 Head (point 2)
2.4.11.4.12 Volume (point 2)
2.4.11.4.13 Volume flow (point 2)
2.4.11.4.14 Sensor temperature (point 2)
2.4.11.4.15 Level difference
2.4.11.4.16 Level average
2.4.11.5 Totalizer alarms
2.4.11.5.1 Totalizer 1
2.4.11.5.2 Totalizer 2
2.4.11.5.3 Totalizer 3
2.4.11.5.4 Totalizer 4
2.4.11.6 Input and output diagnostics
2.4.11.6.1 Current output (HART)
2.4.11.6.2 Current output 1
2.4.11.6.3 Current output 2
2.4.11.7 Memory card diagnostics
2.4.11.7.1 Data logging
2.4.11.8 Process value
2.4.11.9 Units
2.4.11.10 Amount
2.4.11.11 Interval
2.4.11.12 Fail-safe behavior
2.4.11.13 Fail-safe behavior source
2.4.11.14 Polarity
2.4.11.15 On-delay
2.4.11.16 Off-delay
2.4.11.17 Forced value
2.5 Application
2.5.1 Volume
2.5.1.1 Vessel shape
2.5.1.2 Maximum volume
2.5.1.3 Vessel dimension A
2.5.1.4 Vessel dimension L
2.5.2 Custom volume table (1...16)
2.5.2.1 X-value 1
2.5.2.2 Y-value 1
2.5.2.3 X-value 2
2.5.2.4 Y-value 2
2.5.2.5 X-value 3
2.5.2.6 Y-value 3
2.5.2.7 X-value 4
2.5.2.8 Y-value 4
2.5.2.9 X-value 5
2.5.2.10 Y-value 5
2.5.2.11 X-value 6
2.5.2.12 Y-value 6
2.5.2.13 X-value 7
2.5.2.14 Y-value 7
2.5.2.15 X-value 8
2.5.2.16 Y-value 8
2.5.2.17 X-value 9
2.5.2.18 Y-value 9
2.5.2.19 X-value 10
2.5.2.20 Y-value 10
2.5.2.21 X-value 11
2.5.2.22 Y-value 11
2.5.2.23 X-value 12
2.5.2.24 Y-value 12
2.5.2.25 X-value 13
2.5.2.26 Y-value 13
2.5.2.27 X-value 14
2.5.2.28 Y-value 14
2.5.2.29 X-value 15
2.5.2.30 Y-value 15
2.5.2.31 X-value 16
2.5.2.32 Y-value 16

2.5.3 Custom volume table (17...32)
2.5.3.1 X-value 17
2.5.3.2 Y-value 17
2.5.3.3 X-value 18
2.5.3.4 Y-value 18
2.5.3.5 X-value 19
2.5.3.6 Y-value 19
2.5.3.7 X-value 20
2.5.3.8 Y-value 20
2.5.3.9 X-value 21
2.5.3.10 Y-value 21
2.5.3.11 X-value 22
2.5.3.12 Y-value 22
2.5.3.13 X-value 23
2.5.3.14 Y-value 23
2.5.3.15 X-value 24
2.5.3.16 Y-value 24
2.5.3.17 X-value 25
2.5.3.18 Y-value 25
2.5.3.19 X-value 26
2.5.3.20 Y-value 26
2.5.3.21 X-value 27
2.5.3.22 Y-value 27
2.5.3.23 X-value 28
2.5.3.24 Y-value 28
2.5.3.25 X-value 29
2.5.3.26 Y-value 29
2.5.3.27 X-value 30
2.5.3.28 Y-value 30
2.5.3.29 X-value 31
2.5.3.30 Y-value 31
2.5.3.31 X-value 32
2.5.3.32 Y-value 32
2.5.4 Pump control
2.5.4.1 Mode
2.5.4.2 Process value
2.5.4.3 Enable wall cling reduction
2.5.4.4 Wall cling variation
2.5.4.5 Inflow/discharge adjustment
2.5.4.6 Enable pump run-on
2.5.4.7 Pump run-on interval
2.5.4.8 Delay between starts
2.5.4.9 Power resumption delay
2.5.4.10 Enable exercise guard
2.5.4.11 Enable guard level
2.5.4.12 Pump 1
2.5.4.13 On setpoint pump 1
2.5.4.14 Off setpoint pump 1
2.5.4.15 Service ratio pump 1
2.5.4.16 Run-on duration pump 1
2.5.4.17 Interlock pump 1
2.5.4.18 Enable exercise pump 1
2.5.4.19 Exercise interval pump 1
2.5.4.20 Exercise duration pump 1
2.5.4.21 Pump 2
2.5.4.22 On setpoint pump 2
2.5.4.23 Off setpoint pump 2
2.5.4.24 Service ratio pump 2
2.5.4.25 Run-on duration pump 2
2.5.4.26 Interlock pump 2
2.5.4.27 Enable exercise pump 2
2.5.4.28 Exercise interval pump 2
2.5.4.29 Exercise duration pump 2
2.5.4.30 Pump 3
2.5.4.31 On setpoint pump 3
2.5.4.32 Off setpoint pump 3
2.5.4.33 Service ratio pump 3
2.5.4.34 Run-on duration pump 3
2.5.4.35 Interlock pump 3
2.5.4.36 Enable exercise pump 3
2.5.4.37 Exercise interval pump 3
2.5.4.38 Exercise duration pump 3
2.5.4.39 Pump 4
2.5.4.40 On setpoint pump 4
2.5.4.41 Off setpoint pump 4
2.5.4.42 Service ratio pump 4
2.5.4.43 Run-on duration pump 4
2.5.4.44 Interlock pump 4
2.5.4.45 Enable exercise pump 4
2.5.4.46 Exercise interval pump 4
2.5.4.47 Exercise duration pump 4
2.5.4.48 Pump 5
2.5.4.49 On setpoint pump 5
2.5.4.50 Off setpoint pump 5
2.5.4.51 Service ratio pump 5
2.5.4.52 Run-on duration pump 5
2.5.4.53 Interlock pump 5
2.5.4.54 Enable exercise pump 5
2.5.4.55 Exercise interval pump 5
2.5.4.56 Exercise duration pump 5
2.5.4.57 Pump 6
2.5.4.58 On setpoint pump 6
2.5.4.59 Off setpoint pump 6
2.5.4.60 Service ratio pump 6
2.5.4.61 Run-on duration pump 6
2.5.4.62 Interlock pump 6
2.5.4.63 Enable exercise pump 6
2.5.4.64 Exercise interval pump 6
2.5.4.65 Exercise duration pump 6
2.5.5 Pump energy savings
2.5.5.1 Enable
2.5.5.2 Peak lead time
2.5.5.3 Peak 1 start time
2.5.5.4 Peak 1 end time
2.5.5.5 Peak 2 start time
2.5.5.6 Peak 2 end time
2.5.5.7 Peak 3 start time
2.5.5.8 Peak 3 end time
2.5.5.9 Peak 4 start time
2.5.5.10 Peak 4 end time
2.5.5.11 Peak 5 start time
2.5.5.12 Peak 5 end time

2.5.5.13 Peak on setpoint pump 1
2.5.5.14 Peak off setpoint pump 1
2.5.5.15 Peak on setpoint pump 2
2.5.5.16 Peak off setpoint pump 2
2.5.5.17 Peak on setpoint pump 3
2.5.5.18 Peak off setpoint pump 3
2.5.5.19 Peak on setpoint pump 4
2.5.5.20 Peak off setpoint pump 4
2.5.5.21 Peak on setpoint pump 5
2.5.5.22 Peak off setpoint pump 5
2.5.5.23 Peak on setpoint pump 6
2.5.5.24 Peak off setpoint pump 6
2.5.6 Volume flow
2.5.6.1 Primary measuring device (PMD)
2.5.6.2 Method of flow calculation
2.5.6.3 Flow exponent
2.5.6.4 Maximum head
2.5.6.5 Maximum flow
2.5.6.6 Maximum flow
2.5.6.7 Zero head offset wizard
Actual head
2.5.6.8 Zero head offset
2.5.6.9 Enable low flow cut-off
2.5.6.10 Low flow cut-off
2.5.6.11 K-factor
2.5.6.12 V-notch angle
2.5.6.13 Slope
2.5.6.14 Roughness coefficient
2.5.6.15 <PMD dimension 1>
2.5.6.16 <PMD dimension 2>
2.5.6.17 <PMD dimension 3>
2.5.6.18 <PMD dimension 4>
2.5.7 Custom volume flow table (1...16)
2.5.7.1 X-value 1
2.5.7.2 Y-value 1
2.5.7.3 X-value 2
2.5.7.4 Y-value 2
2.5.7.5 X-value 3
2.5.7.6 Y-value 3
2.5.7.7 X-value 4
2.5.7.8 Y-value 4
2.5.7.9 X-value 5
2.5.7.10 Y-value 5
2.5.7.11 X-value 6
2.5.7.12 Y-value 6
2.5.7.13 X-value 7
2.5.7.14 Y-value 7
2.5.7.15 X-value 8
2.5.7.16 Y-value 8
2.5.7.17 X-value 9
2.5.7.18 Y-value 9
2.5.7.19 X-value 10
2.5.7.20 Y-value 10
2.5.7.21 X-value 11
2.5.7.22 Y-value 11
2.5.7.23 X-value 12
2.5.7.24 Y-value 12
2.5.7.25 X-value 13
2.5.7.26 Y-value 13
2.5.7.27 X-value 14
2.5.7.28 Y-value 14
2.5.7.29 X-value 15
2.5.7.30 Y-value 15
2.5.7.31 X-value 16
2.5.7.32 Y-value 16
2.5.8 Custom volume flow table (17...32)
2.5.8.1 X-value 17
2.5.8.2 Y-value 17
2.5.8.3 X-value 18
2.5.8.4 Y-value 18
2.5.8.5 X-value 19
2.5.8.6 Y-value 19
2.5.8.7 X-value 20
2.5.8.8 Y-value 20
2.5.8.9 X-value 21
2.5.8.10 Y-value 21
2.5.8.11 X-value 22
2.5.8.12 Y-value 22
2.5.8.13 X-value 23
2.5.8.14 Y-value 23
2.5.8.15 X-value 24
2.5.8.16 Y-value 24
2.5.8.17 X-value 25
2.5.8.18 Y-value 25
2.5.8.19 X-value 26
2.5.8.20 Y-value 26
2.5.8.21 X-value 27
2.5.8.22 Y-value 27
2.5.8.23 X-value 28
2.5.8.24 Y-value 28
2.5.8.25 X-value 29
2.5.8.26 Y-value 29
2.5.8.27 X-value 30
2.5.8.28 Y-value 30
2.5.8.29 X-value 31
2.5.8.30 Y-value 31
2.5.8.31 X-value 32
2.5.8.32 Y-value 32
2.5.9 Time to spill
2.5.9.1 Time to spill threshold
2.5.9.2 Level to spill
2.5.9.3 Level threshold
2.5.10 Time of day relay
2.5.10.1 Assigned relay
2.5.10.2 Activation time
2.5.10.3 Duration
2.5.11 Basic control
2.5.11.1 Relay output 1
2.5.11.1.1 Control source
2.5.11.1.2 On setpoint
2.5.11.1.3 Off setpoint
2.5.11.2 Relay output 2
2.5.11.2.1 Control source
2.5.11.2.2 On setpoint
2.5.11.2.3 Off setpoint

2.5.11.3 Relay output 3
2.5.11.3.1 Control source
2.5.11.3.2 On setpoint
2.5.11.3.3 Off setpoint
2.5.11.4 Relay output 4
2.5.11.4.1 Control source
2.5.11.4.2 On setpoint
2.5.11.4.3 Off setpoint
2.5.11.5 Relay output 5
2.5.11.5.1 Control source
2.5.11.5.2 On setpoint
2.5.11.5.3 Off setpoint
2.5.11.6 Relay output 6
2.5.11.6.1 Control source
2.5.11.6.2 On setpoint
2.5.11.6.3 Off setpoint
2.5.12 Measurement point 2
2.5.12.1 Volume
2.5.12.1.1 Vessel shape
2.5.12.1.2 Maximum volume
2.5.12.1.3 Vessel dimension A
2.5.12.1.4 Vessel dimension L
2.5.12.2 Custom volume table (1...16)
2.5.12.2.1 X-value 1
2.5.12.2.2 Y-value 1
2.5.12.2.3 X-value 2
2.5.12.2.4 Y-value 2
2.5.12.2.5 X-value 3
2.5.12.2.6 Y-value 3
2.5.12.2.7 X-value 4
2.5.12.2.8 Y-value 4
2.5.12.2.9 X-value 5
2.5.12.2.10 Y-value 5
2.5.12.2.11 X-value 6
2.5.12.2.12 Y-value 6
2.5.12.2.13 X-value 7
2.5.12.2.14 Y-value 7
2.5.12.2.15 X-value 8
2.5.12.2.16 Y-value 8
2.5.12.2.17 X-value 9
2.5.12.2.18 Y-value 9
2.5.12.2.19 X-value 10
2.5.12.2.20 Y-value 10
2.5.12.2.21 X-value 11
2.5.12.2.22 Y-value 11
2.5.12.2.23 X-value 12
2.5.12.2.24 Y-value 12
2.5.12.2.25 X-value 13
2.5.12.2.26 Y-value 13
2.5.12.2.27 X-value 14
2.5.12.2.28 Y-value 14
2.5.12.2.29 X-value 15
2.5.12.2.30 Y-value 15
2.5.12.2.31 X-value 16
2.5.12.2.32 Y-value 16
2.5.12.3 Custom volume table (17...32)
2.5.12.3.1 X-value 17
2.5.12.3.2 Y-value 17
2.5.12.3.3 X-value 18
2.5.12.3.4 Y-value 18
2.5.12.3.5 X-value 19
2.5.12.3.6 Y-value 19
2.5.12.3.7 X-value 20
2.5.12.3.8 Y-value 20
2.5.12.3.9 X-value 21
2.5.12.3.10 Y-value 21
2.5.12.3.11 X-value 22
2.5.12.3.12 Y-value 22
2.5.12.3.13 X-value 23
2.5.12.3.14 Y-value 23
2.5.12.3.15 X-value 24
2.5.12.3.16 Y-value 24
2.5.12.3.17 X-value 25
2.5.12.3.18 Y-value 25
2.5.12.3.19 X-value 26
2.5.12.3.20 Y-value 26
2.5.12.3.21 X-value 27
2.5.12.3.22 Y-value 27
2.5.12.3.23 X-value 28
2.5.12.3.24 Y-value 28
2.5.12.3.25 X-value 29
2.5.12.3.26 Y-value 29
2.5.12.3.27 X-value 30
2.5.12.3.28 Y-value 30
2.5.12.3.29 X-value 31
2.5.12.3.30 Y-value 31
2.5.12.3.31 X-value 32
2.5.12.3.32 Y-value 32
2.5.12.4 Pump control
2.5.12.4.1 Mode
2.5.12.4.2 Process value
2.5.12.4.3 Enable wall cling reduction
2.5.12.4.4 Wall cling variation
2.5.12.4.6 Enable pump run-on
2.5.12.4.7 Pump run-on interval
2.5.12.4.10 Enable exercise guard
2.5.12.4.11 Exercise guard level
2.5.12.4.12 Pump 1
2.5.12.4.13 On setpoint pump 1
2.5.12.4.14 Off setpoint pump 1
2.5.12.4.15 Service ratio pump 1
2.5.12.4.16 Run-on duration pump 1
2.5.12.4.17 Interlock pump 1
2.5.12.4.18 Enable exercise pump 1
2.5.12.4.19 Exercise interval pump 1
2.5.12.4.20 Exercise duration pump 1
2.5.12.4.21 Pump 2
2.5.12.4.22 On setpoint pump 2
2.5.12.4.23 Off setpoint pump 2
2.5.12.4.24 Service ratio pump 2
2.5.12.4.25 Run-on duration pump 2

2.5.12.4.26 Interlock pump 2
2.5.12.4.27 Enable exercise pump 2
2.5.12.4.28 Exercise interval pump 2
2.5.12.4.29 Exercise duration pump 2
2.5.12.4.30 Pump 3
2.5.12.4.31 On setpoint pump 3
2.5.12.4.32 Off setpoint pump 3
2.5.12.4.33 Service ratio pump 3
2.5.12.4.34 Run-on duration pump 3
2.5.12.4.35 Interlock pump 3
2.5.12.4.36 Enable exercise pump 3
2.5.12.4.37 Exercise interval pump 3
2.5.12.4.38 Exercise duration pump 3
2.5.12.4.39 Pump 4
2.5.12.4.40 On setpoint pump 4
2.5.12.4.41 Off setpoint pump 4
2.5.12.4.42 Service ratio pump 4
2.5.12.4.43 Run-on duration pump 4
2.5.12.4.44 Interlock pump 4
2.5.12.4.45 Enable exercise pumpt 4
2.5.12.4.46 Exercise interval pump 4
2.5.12.4.47 Exercise duration pump 4
2.5.12.4.48 Pump 5
2.5.12.4.49 On setpoint pump 5
2.5.12.4.50 Off setpoint pump 5
2.5.12.4.51 Service ratio pump 5
2.5.12.4.52 Run-on duration pump 5
2.5.12.4.53 Interlock pump 5
2.5.12.4.54 Enable exercise pump 5
2.5.12.4.55 Exercise interval pump 5
2.5.12.4.56 Exercise duration pump 5
2.5.12.4.57 Pump 6
2.5.12.4.58 On setpoint pump 6
2.5.12.4.59 Off setpoint pump 6
2.5.12.4.60 Service ratio pump 6
2.5.12.4.61 Run-on duration pump 6
2.5.12.4.62 Interlock pump 6
2.5.12.4.63 Enable exercise pump 6
2.5.12.4.64 Exercise interval pump 6
2.5.12.4.65 Exercise duration pump 6
2.5.12.5 Pump energy savings
2.5.12.5.1 Peak on setpoint pump 1
2.5.12.5.2 Peak off setpoint pump 1
2.5.12.5.3 Peak on setpoint pump 2
2.5.12.5.4 Peak off setpoint pump 2
2.5.12.5.5 Peak on setpoint pump 3
2.5.12.5.6 Peak off setpoint pump 3
2.5.12.5.7 Peak on setpoint pump 4
2.5.12.5.8 Peak off setpoint pump 4
2.5.12.5.9 Peak on setpoint pump 5
2.5.12.5.10 Peak off setpoint pump 5
2.5.12.5.11 Peak on setpoint pump 6
2.5.12.5.12 Peak off setpoint pump 6
2.5.12.6 Volume flow
2.5.12.6.1 Primary measuring device (PMD)
2.5.12.6.2 Method of flow calculation
2.5.12.6.3 Flow exponent
2.5.12.6.4 Maximum head
2.5.12.6.5 Maximum flow
2.5.12.6.6 Maximum flow
2.5.12.6.7 Zero head offset wizard
Actual head
2.5.12.6.8 Zero head offset
2.5.12.6.9 Enable low flow cut-off
2.5.12.6.10 Low flow cut-off
2.5.12.6.11 K-factor
2.5.12.6.12 V-notch angle
2.5.12.6.13 Slope
2.5.12.6.14 Roughness coefficient
2.5.12.6.15 <PMD dimension 1>
2.5.12.6.16 <PMD dimension 2>
2.5.12.6.17 <PMD dimension 3>
2.5.12.6.18 <PMD dimension 4>
2.5.12.7 Custom volume flow table (1...16)
2.5.12.7.1 X-value 1
2.5.12.7.2 Y-value 1
2.5.12.7.3 X-value 2
2.5.12.7.4 Y-value 2
2.5.12.7.5 X-value 3
2.5.12.7.6 Y-value 3
2.5.12.7.7 X-value 4
2.5.12.7.8 Y-value 4
2.5.12.7.9 X-value 5
2.5.12.7.10 Y-value 5
2.5.12.7.11 X-value 6
2.5.12.7.12 Y-value 6
2.5.12.7.13 X-value 7
2.5.12.7.14 Y-value 7
2.5.12.7.15 X-value 8
2.5.12.7.16 Y-value 8
2.5.12.7.17 X-value 9
2.5.12.7.18 Y-value 9
2.5.12.7.19 X-value 10
2.5.12.7.20 Y-value 10
2.5.12.7.21 X-value 11
2.5.12.7.22 Y-value 11
2.5.12.7.23 X-value 12
2.5.12.7.24 Y-value 12
2.5.12.7.25 X-value 13
2.5.12.7.26 Y-value 13
2.5.12.7.27 X-value 14
2.5.12.7.28 Y-value 14
2.5.12.7.29 X-value 15
2.5.12.7.30 Y-value 15
2.5.12.7.31 X-value 16
2.5.12.7.32 Y-value 16
2.5.12.8 Custom volume flow table (17...32)
2.5.12.8.1 X-value 17
2.5.12.8.2 Y-value 17
2.5.12.8.3 X-value 18
2.5.12.8.4 Y-value 18
2.5.12.8.5 X-value 19
2.5.12.8.6 Y-value 19
2.5.12.8.7 X-value 20
2.5.12.8.8 Y-value 20

2.5.12.8.9 X-value 21
2.5.12.8.10 Y-value 21
2.5.12.8.11 X-value 22
2.5.12.8.12 Y-value 22
2.5.12.8.13 X-value 23
2.5.12.8.14 Y-value 23
2.5.12.8.15 X-value 24
2.5.12.8.16 Y-value 24
2.5.12.8.17 X-value 25
2.5.12.8.18 Y-value 25
2.5.12.8.19 X-value 26
2.5.12.8.20 Y-value 26
2.5.12.8.21 X-value 27
2.5.12.8.22 Y-value 27
2.5.12.8.23 X-value 28
2.5.12.8.24 Y-value 28
2.5.12.8.25 X-value 29
2.5.12.8.26 Y-value 29
2.5.12.8.27 X-value 30
2.5.12.8.28 Y-value 30
2.5.12.8.29 X-value 31
2.5.12.8.30 Y-value 31
2.5.12.8.31 X-value 32
2.5.12.8.32 Y-value 32
2.5.12.9 Time to spill
2.5.12.9.1 Time to spill threshold
2.5.12.9.2 Level to spill
2.5.12.9.3 Level threshold
2.7 Date and time
2.7.1 Current date and time
2.7.2 Set date and time
2.8 Local display
2.8.1 Brightness
2.8.2 Backlight
2.8.3 Contrast
2.8.4 Process value damping
2.8.4.1 Damping value
2.8.4.2 Process values
2.8.5 View 1
2.8.5.1 Type
2.8.5.2 1st value
2.8.5.3 2nd value
2.8.5.4 3rd value
2.8.5.5 4th value
2.8.5.6 5th value
2.8.5.7 6th value
2.8.5.8 Graph axis scaling mode
2.8.5.9 Graph log time window
2.8.5.10 Graph scale upper limit
2.8.5.11 Graph scale lower limit
2.8.6 View 2
2.8.6.1 Visibility
2.8.6.2 Type
2.8.6.3 1st value
2.8.6.4 2nd value
2.8.6.5 3rd value
2.8.6.6 4th value
2.8.6.7 5th value
2.8.6.8 6th value
2.8.6.9 Graph axis scaling mode
2.8.6.10 Graph log time window
2.8.6.11 Graph scale upper limit
2.8.6.12 Graph scale lower limit
2.8.7 View 3
2.8.7.1 Visibility
2.8.7.2 Type
2.8.7.3 1st value
2.8.7.4 2nd value
2.8.7.5 3rd value
2.8.7.6 4th value
2.8.7.7 5th value
2.8.7.8 6th value
2.8.7.9 Graph axis scaling mode
2.8.7.10 Graph log time window
2.8.7.11 Graph scale upper limit
2.8.7.12 Graph scale lower limit
2.8.8 View 4
2.8.8.1 Visibility
2.8.8.2 Type
2.8.8.3 1st value
2.8.8.4 2nd value
2.8.8.5 3rd value
2.8.8.6 4th value
2.8.8.7 5th value
2.8.8.8 6th value
2.8.8.9 Graph axis scaling mode
2.8.8.10 Graph log time window
2.8.8.11 Graph scale upper limit
2.8.8.12 Graph scale lower limit
2.8.9 View 5
2.8.9.1 Visibility
2.8.9.2 Type
2.8.9.3 1st value
2.8.9.4 2nd value
2.8.9.5 3rd value
2.8.9.6 4th value
2.8.9.7 5th value
2.8.9.8 6th value
2.8.9.9 Graph axis scaling mode
2.8.9.10 Graph log time window
2.8.9.11 Graph scale upper limit
2.8.9.12 Graph scale lower limit
2.8.10 View 6
2.8.10.1 Visibility
2.8.10.2 Type
2.8.10.3 1st value
2.8.10.4 2nd value
2.8.10.5 3rd value
2.8.10.6 4th value
2.8.10.7 5th value
2.8.10.8 6th value
2.8.10.9 Graph axis scaling mode
2.8.10.10 Graph log time window
2.8.10.11 Graph scale upper limit
2.8.10.12 Graph scale lower limit

- 3 Maintenance and diagnostics
  - 3.1 Identification
    - 3.1.1 Time of last modification
    - 3.1.2 Configuration change counter
    - 3.1.3 Long tag OR Tag
    - 3.1.4 Descriptor
    - 3.1.5 Message
    - 3.1.6 Location
    - 3.1.7 Installation date
    - 3.1.8 Manufacturer
    - 3.1.9 Product name
    - 3.1.10 Article number
    - 3.1.11 Serial number
    - 3.1.12 FW version
    - 3.1.13 HW version
    - 3.1.14 Final assembly number
    - 3.1.16 Local dsplay
      - 3.1.16.1 HW version
      - 3.1.16.2 FW version
      - 3.1.16.3 Menu structure version
    - 3.1.17 Communication interface
      - 3.1.17.1 HW version
      - 3.1.17.2 FW version
      - 3.1.17.3 Serial number
    - 3.1.19 Sensor
      - 3.1.19.1 Revision counter (point 1)
      - 3.1.19.2 Revision counter (point 2)
  - 3.2 Diagnostics
    - 3.2.1 Device status
    - 3.2.2 Diagnostic log
    - 3.2.3 Clear diagnostic log
    - 3.2.4 Acknowledge mode
    - 3.2.5 Suppression time
    - 3.2.6 Status signal mode
    - 3.2.8 LR1xx TVT selection
    - 3.2.9 Echo profile
      - 3.2.9.1 Enable echo profile
      - 3.2.9.2 Echo profile timeout
      - 3.2.9.3 View echo profile
    - 3.2.10 Saved echo profiles
      - 3.2.10.1 Enable
      - 3.2.10.2 Behavior at full memory
      - 3.2.10.3 Save manually
      - 3.2.10.4 Save automatically by diagnostics
      - 3.2.10.5 Save automatically by alarms
      - 3.2.10.6 Save automatically by dual-point alarms
      - 3.2.10.7 Number of saved echo profiles
      - 3.2.10.8 Delete all saved echo profiles
      - 3.2.10.9 View saved echo profile
    - 3.2.11 Echo signal strength
    - 3.2.12 Confidence
    - 3.2.13 Short shot confidence
    - 3.2.14 Measurement point 2
      - 3.2.14.9 Echo profile
        - 3.2.14.9.3 View echo profile
      - 3.2.14.10 Saved echo profiles
        - 3.2.14.10.3 Save manually
        - 3.2.14.10.4 Save automatically by diagnostics
        - 3.2.14.10.5 Save automatically by alarms
        - 3.2.14.10.6 Save automatically by dual-point alarms
        - 3.2.14.10.7 Number of saved echo profiles
        - 3.2.14.10.8 Delete all saved echo profiles
        - 3.2.14.10.9 View saved echo profile
      - 3.2.14.11 Echo signal strength
      - 3.2.14.12 Confidence
      - 3.2.14.13 Short shot confidence
  - 3.3 Maintenance
    - 3.3.1 Operating time
      - 3.3.1.1 Time since last power on
      - 3.3.1.2 Total runtime
      - 3.3.1.3 Total runtime sensor (point 1)
      - 3.3.1.4 Total runtime sensor (point 2)
    - 3.3.2 Scheduled maintenance
      - 3.3.2.1 Device
        - 3.3.2.1.1 Monitoring
        - 3.3.2.1.2 Units
        - 3.3.2.1.3 Expected lifetime
        - 3.3.2.1.4 Elapsed time
        - 3.3.2.1.5 Remaining time
        - 3.3.2.1.6 Maintenance required
        - 3.3.2.1.7 Maintenance demanded
        - 3.3.2.1.8 Reset elapsed time
      - 3.3.2.2 Service
        - 3.3.2.2.1 Monitoring
        - 3.3.2.2.2 Units
        - 3.3.2.2.3 Interval
        - 3.3.2.2.4 Elapsed time
        - 3.3.2.2.5 Remaining time
        - 3.3.2.2.6 Maintenance required
        - 3.3.2.2.7 Maintenance demanded
        - 3.3.2.2.8 Reset elapsed time
      - 3.3.2.3 Calibration
        - 3.3.2.3.1 Monitoring
        - 3.3.2.3.2 Units
        - 3.3.2.3.3 Interval
        - 3.3.2.3.4 Elapsed time
        - 3.3.2.3.5 Remaining time
        - 3.3.2.3.6 Maintenance required
        - 3.3.2.3.7 Maintenance demanded
        - 3.3.2.3.8 Reset elapsed time
    - 3.3.3 Service monitoring
      - 3.3.3.1 Parameter ID
      - 3.3.3.2 Value
  - 3.4 Monitoring
    - 3.4.1 Sensor
      - 3.4.1.1 Input current
      - 3.4.1.2 Minimum temperature
      - 3.4.1.3 Maximum temperature
      - 3.4.1.4 Minutes to spill

3.4.1.5 Measurement point 2
3.4.1.5.1 Input current
3.4.1.5.2 Minimum temperature
3.4.1.5.3 Maximum temperature
3.4.1.5.4 Minutes to spill
3.4.2 Process values
3.4.2.1 Level (point 1)
3.4.2.2 Space (point 1)
3.4.2.3 Distance (point 1)
3.4.2.4 Head (point 1)
3.4.2.5 Volume (point 1)
3.4.2.6 Volume flow (point 1)
3.4.2.7 Sensor temperature (point 1)
3.4.2.8 Level (point 2)
3.4.2.9 Space (point 2)
3.4.2.10 Distance (point 2)
3.4.2.11 Head (point 2)
3.4.2.12 Volume (point 2)
3.4.2.13 Volume flow (point 2)
3.4.2.14 Sensor temperature (point 2)
3.4.2.15 Level difference
3.4.2.16 Level average
3.4.3 Totalizers
3.4.3.1 Totalizer 1
3.4.3.1.1 Totalized amount
3.4.3.1.2 Auto reset limit
3.4.3.1.3 Number of auto resets
3.4.3.2 Totalizer 2
3.4.3.2.1 Totalized amount
3.4.3.2.2 Auto reset limit
3.4.3.2.3 Number of auto resets
3.4.3.3 Totalizer 3
3.4.3.3.1 Totalized amount
3.4.3.3.2 Auto reset limit
3.4.3.3.3 Number of auto resets
3.4.3.4 Totalizer 4
3.4.3.4.1 Totalized amount
3.4.3.4.2 Auto reset limit
3.4.3.4.3 Number of auto resets
3.4.4 Inputs and outputs
3.4.4.1 Current output (HART)
3.4.4.1.1 Loop current
3.4.4.1.2 Diagnostics
3.4.4.2 Loop current 1
3.4.4.3 Loop current 2
3.4.4.4 Digital input 1
3.4.4.5 Digital input 2
3.4.4.6 Relay output 1
3.4.4.7 Relay output 2
3.4.4.8 Relay output 3
3.4.4.9 Relay output 4
3.4.4.10 Relay output 5
3.4.4.11 Relay output 6
3.4.5 Electronics temperature
3.4.5.1 Current value
3.4.5.2 Minimum
3.4.5.3 Timestamp at minimum
3.4.5.4 Maximum
3.4.5.5 Timestamp at maximum
3.4.6 Pump control
3.4.6.1 Runtime relay 1
3.4.6.2 Runtime relay 2
3.4.6.3 Runtime relay 3
3.4.6.4 Runtime relay 4
3.4.6.5 Runtime relay 5
3.4.6.6 Runtime relay 6
3.4.6.7 Last activation relay 1
3.4.6.8 Last activation relay 2
3.4.6.9 Last activation relay 3
3.4.6.10 Last activation relay 4
3.4.6.11 Last activation relay 5
3.4.6.12 Last activation relay 6
3.5 Peak values
3.5.1 Peak value 1
3.5.1.1 Process value
3.5.1.2 Minimum
3.5.1.3 Timestamp at minimum
3.5.1.4 Maximum
3.5.1.5 Timestamp at maximum
3.5.1.6 Reset
3.5.2 Peak value 2
3.5.2.1 Process value
3.5.2.2 Minimum
3.5.2.3 Timestamp at minimum
3.5.2.4 Maximum
3.5.2.5 Timestamp at maximum
3.5.2.6 Reset
3.5.3 Peak value 3
3.5.3.1 Process value
3.5.3.2 Minimum
3.5.3.3 Timestamp at minimum
3.5.3.4 Maximum
3.5.3.5 Timestamp at maximum
3.5.3.6 Reset
3.5.4 Peak value 4
3.5.4.1 Process value
3.5.4.2 Minimum
3.5.4.3 Timestamp at minimum
3.5.4.4 Maximum
3.5.4.5 Timestamp at maximum
3.5.4.6 Reset
3.7 Memory card
3.7.1 Installed
3.7.2 Mass storage device (MSD)
3.7.2.1 Auto connection
3.7.2.2 Connect/disconnect
3.7.3 Capacity
3.7.4 Free space

3.7.5 Data logging
3.7.5.1 Mode
3.7.5.2 Logging interval
3.7.5.3 Process values
3.7.5.3.1 Logging value 1
3.7.5.3.2 Logging value 2
3.7.5.3.3 Logging value 3
3.7.5.3.4 Logging value 4
3.7.5.3.5 Logging value 5
3.7.5.3.6 Logging value 6
3.7.5.3.7 Logging value 7
3.7.5.3.8 Logging value 8
3.7.5.3.9 Logging value 9
3.7.5.4 Advanced logging
3.7.5.4.1 Register 1
3.7.5.4.2 Register 2
3.7.5.4.3 Register 3
3.7.5.4.4 Register 4
3.7.5.4.5 Register 5
3.7.5.4.6 Register 6
3.7.5.4.7 Register 7
3.7.5.4.8 Register 8
3.7.5.4.9 Register 9
3.7.5.4.10 Register 10
3.7.5.4.11 Register 11
3.7.5.4.12 Register 12
3.7.5.4.13 Register 13
3.7.5.4.14 Register 14
3.7.5.4.15 Register 15
3.7.5.4.16 Register 16
3.7.5.4.17 Register 17
3.7.5.4.18 Register 18
3.7.5.4.19 Register 19
3.7.5.4.20 Register 20
3.7.5.4.21 Register 21
3.7.5.4.22 Register 22
3.7.5.4.23 Register 23
3.7.5.4.24 Register 24
3.7.5.4.25 Register 25
3.7.5.4.26 Register 26
3.7.5.4.27 Register 27
3.7.5.4.28 Register 28
3.7.5.4.29 Register 29
3.7.5.4.30 Register 30
3.7.5.4.31 Register 31
3.7.5.4.32 Register 32
3.7.5.4.33 Register 33
3.7.5.4.34 Register 34
3.7.5.4.35 Register 35
3.7.5.4.36 Register 36
3.7.5.4.37 Register 37
3.7.5.4.38 Register 38
3.7.5.4.39 Register 39
3.7.5.4.40 Register 40
3.7.5.4.41 Register 41
3.7.5.4.42 Register 42
3.7.5.4.43 Register 43
3.7.5.4.44 Register 44
3.7.5.4.45 Register 45
3.7.5.4.46 Register 46
3.7.5.4.47 Register 47
3.7.5.4.48 Register 48
3.7.5.4.49 Register 49
3.7.5.4.50 Register 50
3.7.5.4.51 Register 51
3.7.5.4.52 Register 52
3.7.5.4.53 Register 53
3.7.5.4.54 Register 54
3.7.5.4.55 Register 55
3.7.5.4.56 Register 56
3.7.5.4.57 Register 57
3.7.5.4.58 Register 58
3.7.5.4.59 Register 59
3.7.5.4.60 Register 60
3.7.5.4.61 Register 61
3.7.5.4.62 Register 62
3.7.5.4.63 Register 63
3.7.5.4.64 Register 64
3.7.5.4.65 Register 65
3.7.5.4.66 Register 66
3.7.5.4.67 Register 67
3.7.5.4.68 Register 68
3.7.5.4.69 Register 69
3.7.5.4.70 Register 70
3.7.5.4.71 Register 71
3.7.5.4.72 Register 72
3.7.5.4.73 Register 73
3.7.5.4.74 Register 74
3.7.5.4.75 Register 75
3.7.5.4.76 Register 76
3.7.5.4.77 Register 77
3.7.5.4.78 Register 78
3.7.5.4.79 Register 79
3.7.5.4.80 Register 80
3.7.5.4.81 Register 81
3.7.5.4.82 Register 82
3.7.5.4.83 Register 83
3.7.5.4.84 Register 84
3.7.5.4.85 Register 85
3.7.5.4.86 Register 86
3.7.5.4.87 Register 87
3.7.5.4.88 Register 88
3.7.5.4.89 Register 89
3.7.5.4.90 Register 90
3.7.5.5 Behavior at full memory
3.7.5.6 Enable diagnostics
3.7.5.7 Decimal separator
3.7.5.8 Enable data logging
3.8 Simulation
3.8.1 Process values
3.8.1.1 Level (point 1)
3.8.1.1.1 Simulation mode
3.8.1.1.2 Simulation value
3.8.1.1.3 Rate

3.8.1.8 Level (point 2)
3.8.1.8.1 Simulation mode
3.8.1.8.2 Simulation value
3.8.1.8.3 Rate
3.8.2 Totalizers
3.8.2.1 Totalizer 1
3.8.2.1.1 Simulation mode
3.8.2.1.2 Simulation value
3.8.2.2 Totalizer 2
3.8.2.2.1 Simulation mode
3.8.2.2.2 Simulation value
3.8.2.3 Totalizer 3
3.8.2.3.1 Simulation mode
3.8.2.3.2 Simulation value
3.8.2.4 Totalizer 4
3.8.2.4.1 Simulation mode
3.8.2.4.2 Simulation value
3.8.3 Inputs and outputs
3.8.3.1 Current output (HART)
3.8.3.1.1 Simulation mode
3.8.3.1.2 Simulation value
3.8.3.2 Current output 1
3.8.3.2.1 Simulation mode
3.8.3.2.2 Simulation value
3.8.3.3 Current output 2
3.8.3.3.1 Simulation mode
3.8.3.3.2 Simulation value
3.8.3.4 Digital input 1
3.8.3.4.1 Simulation mode
3.8.3.4.2 Simulation value
3.8.3.5 Digital input 2
3.8.3.5.1 Simulation mode
3.8.3.5.2 Simulation value
3.8.3.6 Relay output 1
3.8.3.6.1 Simulation mode
3.8.3.6.2 Simulation value
3.8.3.7 Relay output 2
3.8.3.7.1 Simulation mode
3.8.3.7.2 Simulation value
3.8.3.8 Relay output 3
3.8.3.8.1 Simulation mode
3.8.3.8.2 Simulation value
3.8.3.9 Relay output 4
3.8.3.9.1 Simulation mode
3.8.3.9.2 Simulation value
3.8.3.10 Relay output 5
3.8.3.10.1 Simulation mode
3.8.3.10.2 Simulation value
3.8.3.11 Relay output 6
3.8.3.11.1 Simulation mode
3.8.3.11.2 Simulation value
3.8.4 Alarms and diagnostics
3.8.4.1 Simulation mode
3.8.4.2 Status signals
3.8.4.3 Sensor
3.8.4.3.1 Measurement point 1
3.8.4.3.2 Measurement point 2
3.8.4.4 Process values
3.8.4.4.1 Level (point 1)
3.8.4.4.2 Space (point 1)
3.8.4.4.3 Distance (point 1)
3.8.4.4.4 Head (point 1)
3.8.4.4.5 Volume (point 1)
3.8.4.4.6 Volume flow (point 1)
3.8.4.4.7 Sensor temperature (point 1)
3.8.4.4.8 Level (point 2)
3.8.4.4.9 Space (point 2)
3.8.4.4.10 Distance (point 2)
3.8.4.4.11 Head (point 2)
3.8.4.4.12 Volume (point 2)
3.8.4.4.13 Volume flow (point 2)
3.8.4.4.14 Sensor temperature (point 2)
3.8.4.4.15 Level difference
3.8.4.4.16 Level average
3.8.4.5 Totalizer alarms
3.8.4.5.1 Totalizer 1
3.8.4.5.2 Totalizer 2
3.8.4.5.3 Totalizer 3
3.8.4.5.4 Totalizer 4
3.8.4.6 Inputs and outputs
3.8.4.6.1 Current output (HART)
3.8.4.6.2 Current output 1
3.8.4.6.3 Current output 2
3.8.4.7 Memory card
3.8.4.7.1 Data logging
3.8.4.8 Device
3.9 Audit trail
3.9.1 Parameter change log
3.9.2 Clear parameter change log
3.9.3 FW update change log
3.9.4 Clear FW update change log
3.11 Resets
3.11.1 Device restart
3.11.2 Number of device restarts
3.12 Restore setup
3.12.1 Create restore point
3.12.2 Restore
3.12.3 Delete restore point
3.12.8 Restore ordered configuration
3.12.9 Restore auto saved configuration
3.13 Firmware update

4 Communication
4.2 HART
4.2.1 Polling address (SW)
4.2.2 Polling address (HW)
4.2.3 HART device revision
4.2.4 Number of response preambles
4.2.5 Dynamic variable mapping
4.2.5.1 PV selection
4.2.5.2 SV selection
4.2.5.3 TV selection
4.2.5.4 QV selection

4.2.6 Units
4.2.6.1 Process values
4.2.6.1.1 Level
4.2.6.1.2 Volume
4.2.6.1.3 Volume flow
4.2.6.1.4 Temperature
4.2.6.2 Totalizers
4.2.6.2.1 Totalizer 1
4.2.6.2.2 Totalizer 2
4.2.6.2.3 Totalizer 3
4.2.6.2.4 Totalizer 4
4.2.7 Process value damping
4.2.7.1 Damping value
4.2.7.2 Process values
4.3 Modbus RTU
4.3.1 Slave address (SW)
4.3.3 Change Modbus settings
Modbus data rate
Modbus Parity and stopbits
Floating point byte order
Integer byte order
4.3.4 Data rate
4.3.5 Parity and stopbits
4.3.6 Floating point byte order
4.3.7 Integer byte order
4.3.8 Register mapping
4.3.8.1 Enable
4.3.8.2 Source register 1
4.3.8.3 Target register 1
4.3.8.4 Source register 2
4.3.8.5 Target register 2
4.3.8.6 Source register 3
4.3.8.7 Target register 3
4.3.8.8 Source register 4
4.3.8.9 Target register 4
4.3.8.10 Source register 5
4.3.8.11 Target register 5
4.3.8.12 Source register 6
4.3.8.13 Target register 6
4.3.8.14 Source register 7
4.3.8.15 Target register 7
4.3.8.16 Source register 8
4.3.8.17 Target register 8
4.3.8.18 Source register 9
4.3.8.19 Target register 9
4.3.8.20 Source register 10
4.3.8.21 Target register 10
4.3.8.22 Source register 11
4.3.8.23 Target register 11
4.3.8.24 Source register 12
4.3.8.25 Target register 12
4.3.8.26 Source register 13
4.3.8.27 Target register 13
4.3.8.28 Source register 14
4.3.8.29 Target register 14
4.3.8.30 Source register 15
4.3.8.31 Target register 15
4.3.8.32 Source register 16
4.3.8.33 Target register 16
4.3.8.34 Source register 17
4.3.8.35 Target register 17
4.3.8.36 Source register 18
4.3.8.37 Target register 18
4.3.8.38 Source register 19
4.3.8.39 Target register 19
4.3.8.40 Source register 20
4.3.8.41 Target register 20
4.3.9 Units
4.3.9.1 Process values
4.3.9.1.1 Level
4.3.9.1.2 Volume
4.3.9.1.3 Volume flow
4.3.9.1.4 Temperature
4.3.9.2 Totalizers
4.3.9.2.1 Totalizer 1
4.3.9.2.2 Totalizer 2
4.3.9.2.3 Totalizer 3
4.3.9.2.4 Totalizer 4
4.3.10 Process value damping
4.3.10.1 Damping value
4.3.10.2 Process values
4.4 PROFIBUS DP/PA
4.4.1 Slave address
4.4.2 Change slave address
4.4.3 GSD (General Station Description)
4.4.4 Active GSD (General Station Description)
4.4.5 Units
4.4.5.1 Process values
4.4.5.1.1 Level
4.4.5.1.2 Volume
4.4.5.1.3 Volume flow
4.4.5.1.4 Temperature
4.4.5.2 Totalizers
4.4.5.2.1 Totalizer 1
4.4.5.2.2 Totalizer 2
4.4.5.2.3 Totalizer 3
4.4.5.2.4 Totalizer 4
4.4.6 Process value damping
4.4.6.1 Level (point 1)
4.4.6.2 Space (point 1)
4.4.6.3 Distance (point 1)
4.4.6.4 Head (point 1)
4.4.6.5 Volume (point 1)
4.4.6.6 Volume flow (point 1)
4.4.6.7 Sensor temperature (point 1)
4.4.6.8 Level (point 2)
4.4.6.9 Space (point 2)
4.4.6.10 Distance (point 2)
4.4.6.11 Head (point 2)
4.4.6.12 Volume (point 2)
4.4.6.13 Volume flow (point 2)
4.4.6.14 Sensor temperature (point 2)
4.4.6.15 Level difference
4.4.6.16 Level average

- 4.5 PROFINET
  - 4.5.1 MAC address
  - 4.5.2 IP address
  - 4.5.3 IP subnet mask
  - 4.5.4 Default gateway
  - 4.5.5 Device name
  - 4.5.6 Units
    - 4.5.6.1 Process values
      - 4.5.6.1.1 Level
      - 4.5.6.1.2 Volume
      - 4.5.6.1.3 Volume flow
      - 4.5.6.1.4 Temperature
    - 4.5.6.2 Totalizers
      - 4.5.6.2.1 Totalizer 1
      - 4.5.6.2.2 Totalizer 2
      - 4.5.6.2.3 Totalizer 3
      - 4.5.6.2.4 Totalizer 4
  - 4.5.7 Process value damping
    - 4.5.7.1 Level (point 1)
    - 4.5.7.2 Space (point 1)
    - 4.5.7.3 Distance (point 1)
    - 4.5.7.4 Head (point 1)
    - 4.5.7.5 Volume (point 1)
    - 4.5.7.6 Volume flow (point 1)
    - 4.5.7.7 Sensor temperature (point 1)
    - 4.5.7.8 Level (point 2)
    - 4.5.7.9 Space (point 2)
    - 4.5.7.10 Distance (point 2)
    - 4.5.7.11 Head (point 2)
    - 4.5.7.12 Volume (point 2)
    - 4.5.7.13 Volume flow (point 2)
    - 4.5.7.14 Sensor temperature (point 2)
    - 4.5.7.15 Level difference
    - 4.5.7.16 Level average

- 5 Security
  - 5.1 Change user PIN
  - 5.2 Change expert PIN
  - 5.3 Recovery ID
  - 5.4 PIN recovery
  - 5.5 Enable user PIN
  - 5.6 Disable user PIN
  - 5.7 Auto logout
  - 5.8 Logout

- 6 Language

Abbreviations

F

Short form	Long form	Description	Units
AC	Alternating current	Power source	
AFES	Auto false echo suppression		
BS-3680		Flow standards from the British Standards Institute	
CE / UKCA / FM / CSA / UL / RCM	Conformité Européenne / Conformity with UK regulations / Factory mutual / Canadian standards association / Underwriters laboratories / Regulatory compliance mark	Safety approvals	
dB	Decibel		dB
DC	Direct current		
EIA	Electrical industries alliance		
EMC	Electromagnetic compatibility		
FSK	Frequency shift keying		
HART	Highway addressable remote transducer		
HMI	Human machine interface	View outputs via LCD display; make modifications via local buttons	
Hz	Hertz		Hz
IEC	International electrotechnical commission		
IP	Ingress protection		
ISO	International organization for standardization		
LCD	Liquid crystal display		
LOE	Loss of echo		
mA	Milliamp	Unit of electric current	milliamps
MBP	Manchester bus powered		
Modbus		Serial communication protocol	
MSB	Most significant byte		
NE	NAMUR		
NEMA	National electrical manufacturer's association		
Nm	Newton meter	Unit of torque	Nm
OCM	Open channel monitoring		
(SIMATIC) PDM	Process device manager		
pF	Pico farads	10^{-12}	pF
PLC	Programmable logic controller		
PMD	Primary measuring device		
PROFIBUS	Process field bus	Standard for fieldbus communication	

Short form	Long form	Description	Units
PROFINET	Process field net	Standard for industrial ethernet communica-tion	
PV	Primary variable	Measured value	
QV	Quaternary variable	Equivalent value	
SCADA	Supervisory control and data acquisition		
SV	Secondary variable	Equivalent value	
TV	Tertiary variable	Equivalent value	
TVT	Time varying threshold	Sensitivity threshold	
USB	Universal serial bus		

Glossary

accuracy

Degree of conformity of a measure to a standard or a true value.

acoustical noise

Any undesired audible sound.

agitator

Mechanical apparatus for mixing or aerating. A device for creating turbulence.

algorithm

A prescribed set of well-defined rules or processes for the solution of a problem in a finite number of steps.

ambient temperature

The temperature of the surrounding air that comes in contact with the enclosure of the device.

Auto false echo suppression

A technique used to adjust the level of a TVT curve to avoid the reading of false echoes.

Auto false echo suppression range

Defines the end point of the TVT distance. This is used in conjunction with auto false echo suppression.

blanking

A blind zone extending away from the reference point. The device is programmed to ignore this zone.

confidence

Describes the quality of an echo. Higher values represent higher quality. Confidence threshold defines the minimum value.

damping

Term applied to the performance of a device to denote the manner in which the measurement settles to its steady indication after a change in the value of the level.

decibel (dB)

A unit used to measure the amplitude of signals.

echo

A signal that has been reflected with sufficient magnitude and delay to be perceived in some manner as a signal distinct from that directly transmitted. Echoes are frequently measured in decibels relative to the directly transmitted signal.

echo confidence

The recognition of the validity of the echo. A measure of echo reliability.

echo processing

The process by which the device determines echoes.

echo profile

A graphical display of a processed echo.

electrical noise

Unwanted electrical signals that produce undesirable effects in the circuits of the control systems in which they occur.

false echo

Any echo which is not the echo from the desired target. Generally, false echoes are created by vessel obstructions.

far range

The distance below the zero percent or empty point in a vessel.

frequency

The number of periods occurring per unit time. Frequency may be stated in cycles per second.

Hertz (Hz)

Unit of frequency, one cycle per second. 1 Gigahertz (GHz) is equal to 10^9 Hz.

multiple echoes

Secondary echoes that appear as double, triple, or quadruple echoes in the distance from the target echo.

nozzle

A length of pipe mounted onto a vessel that supports the flange.

parameters

In programming, variables that are given constant values for specific purposes or processes.

pulse

A wave that departs from an initial level for a limited duration of time, and returns to the initial level.

range

Distance between a sensor and a target.

speed of sound

The speed at which sound is propagated through some medium under specified conditions.

stilling well

A pipe that is mounted inside a vessel parallel to the vessel wall, and is open to the vessel at the bottom.

TVT (time varying threshold)

A time-varying curve that determines the threshold level above which echoes are determined to be valid.

ultrasonic

Having a frequency above the human ear's audibility limit: about 20,000 hertz.

Index

A

Abbreviations and identifications list, 498
Access level, 117
Alarm views, 111
Alarms, 130
    fail-safe, 140
    function categories, 137
    in-bounds, 132
    level, 130, 131
    level, common parameters, 131
    out-of-bounds, 131
    rate, emptying, 132
    rate, filling, 132
    relay function, 137
    relays, function, 138, 140
    relays, technical data, 400
    relays, volume, 145
    wizard, 182
Algorithm, 411
Alternate duty assist, 148, 154
Application example
    level, 100
    volume flow, 101
Approvals
    specifications, 405
Auto false echo suppression, 412
    range, 412

B

Basic control
    wizard, 182
Breakpoints
    level, 417
    volume, 417
    volume flow, 420

C

Cables, 43
    cable entry, 29, 406
    cable gland, 32, 35
    connecting, 39
    entry location, 29, 406
    technical data, 402
Catalog
    catalog sheets, 408
Certificates, 21, 408
Cleaning, 357
Communication
    card, 36, 37
    card, installation, 36, 37
    fieldbus, 48
Conduit, 32, 35
Conduits
    requirements, 38
Controls
    relays, function, 140
Customer Support, (Refer to Technical support)

D

Damping, 415
Device Description (DD)
    see EDD, 472
Diagnostic views, 111
Digital inputs, 401
    pump interlock, 156
Dimensions
    enclosure, 406
    enclosure, cutout, 34
    enclosure, mounting, 33
    enclosure, panel mount, 33, 402
    enclosure, wall mount, 29, 402
    measurement conditions, 124
    OCM (open channel monitoring), 163
    PMD, 163
Disassembly, 37
Discrete inputs, (see Digital inputs)
Display
    technical data, 402
Disposal, 361, 361
Document history, 14
Downloads, 408
Dual-point version
    average or difference, 123
    general discussion, 123
    inputs, 401
    outputs, 400

E

Echo processing, 410
algorithm, 411
auto false echo suppression, 412
Edit view, 117
Electronic Device Description (EDD), 471
updating, 472
Enclosure. See also dimensions, mounting, 402

F

Fail-safe, 125
parameters, 125
Fixed duty assist, 150
Fixed duty backup, 151
Flow samplers, 140
Flume
cut throat, 168
Khafagi Venturi, 169
Leopold Lagco, 168
Parshall, 167
rectangular, 170
trapezoidal, 172
U-flume, 173

H

Head, 163
HMI (Human Machine Interface), 53
local operation, 103
technical data, 402
Hotline, (Refer to Support request)

I

Icons, (see Symbol)
Identifications and abbreviations
list, 498
Inputs
technical data, 401
Installation
requirements, 27
warnings and notes, 27
Interlock
pump, 156

L

LCD
technical data, 402
Level, 123
alarms, 130
Loss of echo (LOE), 125

M

mA
inputs, technical data, 401
outputs, 400
Maintenance, 357
device maintenance parameters, 301
device status symbols, 363
Manuals, 408
Measurement conditions, 124
dimensions, 124
fail-safe parameters, 125
response rate, 124
Measurement rate, 128
auto false echo suppression, 201
echo profiles, 294
Modifications
correct usage, 22
improper, 22
Mounting
instructions, 29

O

OCM (open channel monitoring), 163
common parameters, 165
definitions, 163
exponential flow, 165
external totalizers, 140
flow exponent support, 165
Operating conditions, 402
Operating views, 109
Operation views, 106
Output
current output, 133

P

Panel mount
cutout, mounting on panel, 35
Parameter view, 115
PDM
see SIMATIC PDM, 471
Power
specification, 398
Process values
Damping, 122, 230, 233

Programming
alarms, 130
Pump control
algorithms, 147
alternate duty backup, 149
alternate duty backup, alternate duty assist, 147
fixed duty assist, fixed duty backup, 147
functions, 139
interlock, 156
off setpoint, 149
off setpoints, 150, 151, 151, 152, 153, 155
on setpoint, off setpoint, 148
on setpoints, 149, 150, 150, 151, 152, 153, 155
optional controls, service ratio, 157
run-on, 158
service ratio duty assist, service ratio duty backup, 147
setpoints and functionality, 139
start delay, 158
strategies, 147
totalizing volume, 157
wizard, 147
Pump exercise function, 161
Pumps
pumped volume, 145
relays, ON and OFF setpoints, 140

Q

Quick start wizards
local commissioning, 53, 103
remote commissioning, 475

R

Randomize setpoints, 159
Rate
rate alarms, 132
response rate, 124
Read only view, 117
Relays
contacts and connection, 44
elapsed time, 142
function, 137
general introduction, 136
local commissioning, 53, 103
pumps, totalizing and sampling, 141
related parameters, 140
related parameters, limits, 140
related parameters, ON and OFF setpoints, 140
time control, 181
time of day, 181
Response rate, 124, 414
Restart, 329
Return procedure, 361

S

Scope of delivery, 18
Scum ring, 159
Sensor override, 143
Sensor reference point, 63, 68
Sensors
average or difference, 124
Service, 409
Service and support
Internet, 409
Service ratio duty assist, 152
Service ratio duty backup, 152
SIMATIC PDM
functions and features, 473
menus, 475
overview, 471
parameters, 475
setup, 471
simulation, 184
Simulation
process, 187
Single-point version
general discussion, 123
inputs, 401
outputs, 400
Sound velocity, 417
Support, 409
Support request, 409
Symbol
configuration, 363
device status, 363
diagnostics, 363
maintenance, 363
process value, 363

T

Technical data, 398
cable, 402
enclosure, 402
inputs, 401
outputs, 400
weight, 402

Technical support, 409
    partner, 409
    personal contact, 409
Terminal board, 43
Test certificates, 21
Time control
    relays, 142
Time to spill, 181
Totalizers, external, 140

V

Velocity, 417
Views
    access level, 117
    alarm, 111
    diagnostics, 111
    edit, 117
    operating, 109
    operation, 106
    parameter, 115
    read only, 117
Volume, 145
    OCM (open channel monitoring), 163
    pumped volume, 140, 142, 145
Volume
    dimensions, 124
Volume
    pumped volume
Volume calculation
    custom calculation, 417
    example, 146
    vessel shape, 72, 248
Volume flow calculation
    example, 420

W

Wall mount
    mounting on wall, 32
Warranty, 20
Weight, 402
Weirs
    applicable profiles, 165
    standard, 165
Wiring
    compartment, 42
    insulation, 27