SIEMENS

SIPART

Electropneumatic positioners SIPART PS100

Operating Instructions

Getting started 1

Introduction 2

Safety notes 3

Installing/mounting 4

Connecting 5

Local operation 6

Commissioning 7

Parameter assignment and addressing 8

Troubleshooting 9

Service and maintenance 10

Technical specifications 11

Dimension drawings 12

Product documentation and support A

Bluetooth B

6DR710. SIPART PS100 Polycarbonate
6DR711. SIPART PS100 Aluminum without window

05/2021
A5E50188938-AE

Legal information

Warning notice system

This manual contains notices you have to observe in order to ensure your personal safety, as well as to prevent damage to property. The notices referring to your personal safety are highlighted in the manual by a safety alert symbol, notices referring only to property damage have no safety alert symbol. These notices shown below are graded according to the degree of danger.

⚠ DANGER
indicates that death or severe personal injury **will** result if proper precautions are not taken.

⚠ WARNING
indicates that death or severe personal injury **may** result if proper precautions are not taken.

⚠ CAUTION
indicates that minor personal injury can result if proper precautions are not taken.

NOTICE
indicates that property damage can result if proper precautions are not taken.

If more than one degree of danger is present, the warning notice representing the highest degree of danger will be used. A notice warning of injury to persons with a safety alert symbol may also include a warning relating to property damage.

Qualified Personnel

The product/system described in this documentation may be operated only by **personnel qualified** for the specific task in accordance with the relevant documentation, in particular its warning notices and safety instructions. Qualified personnel are those who, based on their training and experience, are capable of identifying risks and avoiding potential hazards when working with these products/systems.

Proper use of Siemens products

Note the following:

⚠ WARNING
Siemens products may only be used for the applications described in the catalog and in the relevant technical documentation. If products and components from other manufacturers are used, these must be recommended or approved by Siemens. Proper transport, storage, installation, assembly, commissioning, operation and maintenance are required to ensure that the products operate safely and without any problems. The permissible ambient conditions must be complied with. The information in the relevant documentation must be observed.

Trademarks

All names identified by ® are registered trademarks of Siemens AG. The remaining trademarks in this publication may be trademarks whose use by third parties for their own purposes could violate the rights of the owner.

Disclaimer of Liability

We have reviewed the contents of this publication to ensure consistency with the hardware and software described. Since variance cannot be precluded entirely, we cannot guarantee full consistency. However, the information in this publication is reviewed regularly and any necessary corrections are included in subsequent editions.

Siemens AG
Digital Industries
Postfach 48 48
90026 NÜRNBERG
GERMANY

Document order number: A5E50188938
Ⓟ 04/2021 Subject to change

Copyright © Siemens AG 2021.
All rights reserved

Table of contents

1 Getting started 7

2 Introduction 9

2.1 Purpose of this documentation 9

2.2 Scope of documentation 9

2.3 Document history 10

2.4 Product compatibility 10

2.5 Designated use 10

2.6 Checking the consignment 11

2.7 Design of the nameplate 11

2.8 Security information 12

2.9 Transportation and storage 13

2.10 Notes on warranty 13

3 Safety notes 15

3.1 Prerequisites for safe use 15
3.1.1 Warning symbols on the device 15
3.1.2 Laws and directives 15
3.1.3 Conformity with European directives 16
3.1.4 Product approval and UL compliance 16

3.2 Use in hazardous areas 17

4 Installing/mounting 19

4.1 Basic safety notes 19
4.1.1 Proper mounting 20

4.2 Mounting to linear actuator 21

4.3 Mounting to part-turn actuator 24

5 Connecting 29

5.1 Basic safety notes 29

5.2 Grounding 32

5.3 Electrical connection 33

5.4 Pneumatic connection 33
5.4.1 Structure of pneumatic connection 34
5.4.2 Behavior in case of failure of the electrical auxiliary power and/or the supply pressure PZ 34

6 Local operation ... 37

7 Commissioning ... 39

7.1 Basic safety notes ... 39

7.2 Initialize in "NO INIT" operating mode ... 41

8 Parameter assignment and addressing ... 43

8.1 Overview of the menu structure ... 43

8.2 QUICK START [01] ... 44

8.3 SETUP [02] ... 45

8.4 MAINT/DIAGS [03] ... 46

9 Troubleshooting ... 49

9.1 Device status symbols ... 49

9.2 Info IDs, error messages and corrective measures ... 50

10 Service and maintenance ... 53

10.1 Basic safety notes ... 53

10.1.1 Maintenance ... 53

10.2 Cleaning ... 53

10.3 Maintenance and repair work ... 54

10.4 Return procedure ... 55

10.5 Replace electronics ... 56

10.6 Replacing the pneumatic block ... 58

10.7 Disposal ... 59

11 Technical specifications ... 61

11.1 Input ... 61

11.2 Output ... 61

11.3 Rated conditions ... 62

11.4 Pneumatic data ... 62

11.5 Mechanical construction ... 63

11.6 Controller ... 64

11.7 Explosion protection ... 65

11.7.1 Type key ... 65

11.7.2 Markings for explosion protection ... 66

11.7.3 Ambient temperature ... 67

11.7.4 Electrical specifications ... 68

12 Dimension drawings ... 69

A Product documentation and support ... 71

A.1 Product documentation ... 71

A.2 Technical support ... 72

B Bluetooth ... 73

B.1 Connecting SIPART PS100 with SITRANS AW050 Bluetooth adapter ... 73

B.2 Connecting a field device using the SITRANS mobile IQ app ... 74

B.3 Technical data ... 75
B.3.1 SITRANS mobile IQ ... 75
B.3.2 SITRANS AW050 Bluetooth adapter ... 76
B.3.3 Information for radio approval FCC and IC ... 77

B.4 Dimension drawing SITRANS AW050 Bluetooth adapter ... 78

Index ... 79

Getting started

1

Requirement

You have read the following safety instructions:

- General safety notes (Page 15)
- Basic safety notes: Installing/mounting (Page 19)
- Basic safety notes: Connecting (Page 29)
- Basic safety notes: Commissioning (Page 39)

Read the entire document for information on getting the best performance from your device.

Procedure

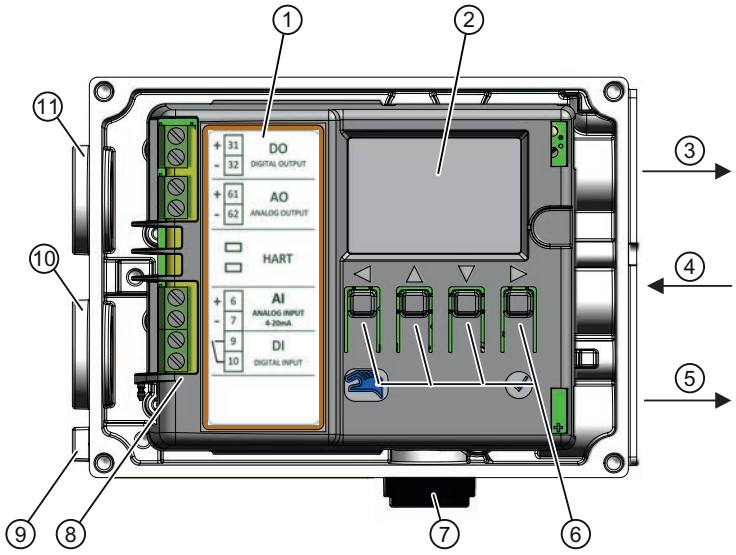

①	Circuit diagram on module cover	⑦	Exhaust air outlet with a sound absorber
②	Display	⑧	Connecting terminals
③	Output: Actuating pressure Y1	⑨	Grounding, thread M4
④	Input: Supply pressure PZ	⑩	Lower cable gland, thread M20x1.5
⑤	Output: Actuating pressure Y2 for double-acting actuators	⑪	Upper cable gland, thread M20x1.5
⑥	Buttons		

Figure 1-1 Overview of device components, open cover

1. Mount the positioner.
   Mounting to linear actuator (Page 21)
   Mounting to part-turn actuator (Page 24)
2. Connect the positioner.
   Electrical connection (Page 33)
   Pneumatic connection (Page 33)
3. Ground the positioner.
   Grounding (Page 32)
4. Remove the enclosure cover.
5. Commission the positioner.
   Initialize in "NO INIT" operating mode (Page 41)
   Local operation (Page 37)
6. Remove the enclosure cover.

Introduction 2

2.1 Purpose of this documentation

These instructions are a brief summary of important features, functions and safety information, and contain all information required for safe use of the device. Read the instructions carefully prior to installation and commissioning. In order to use the device correctly, first review its principle of operation.

The instructions are aimed at persons who install and commission the device.

To realize optimum performance from the device, read the complete operating instructions.

2.2 Scope of documentation

Article no.	Product
6DR710.	SIPART PS100, Polycarbonate
6DR711.	SIPART PS100, Aluminum without window
7MP3210-0AA01	SITRANS AW050 Bluetooth adapter kit for SIPART PS100

2.3 Document history

The most important changes in the documentation when compared with the respective previous edition are given in the following table.

Edition	Comment
05/2021	• Changes for FW 1.03.00, HART device revision 1 • HART communication in various sections • Explosion protection in various sections • "Troubleshooting" section: New Info-ID 6Y (Page 50) • "Technical specifications" section New "Explosion protection (Page 65)" • "Service and maintenance" section New "Replacing electronics (Page 56)" and "Replacing a pneumatic block (Page 58)" • New section "Bluetooth (Page 73)"
03/2020	• Changes for FW 1.02.00, HART device revision 1 • Changed parameter IDs • In "QUICK START" menu: New parameter "VALVE TYPE" [06] • In "SETUP" menu: – For "BEHAVIOR DO" [01] new function "POS" – For "BEHAVIOR DO" [01] function "NONE" changed to "ERR M" – New parameter "DO POS LIMIT" [03] • In "MAINT/DIAG" menu: – The parameters "PIEZO 1" [56] and "PIEZO 2" [57] were renamed to "PILOT 1" [04] and "PILOT 2" [05]. – New parameter "HW Version" [06] • "Troubleshooting" chapter: Addition info IDs are displayed for the status of the digital input (DI) in the "AUTO" operating mode: 6E, 6F, 6H

2.4 Product compatibility

The following table describes the compatibility between the edition of the manual, device revision, engineering system and associated Electronic Device Description (EDD).

Manual edition	Comments	Device revision	Compatible version of device integration package
05/2021	New device features	FW: 1.03.00 or higher Device revision 1 or higher	EDD: 1.00.00
03/2020	New device features	FW: 1.02.00 or higher Device revision 1 or higher	-

2.5 Designated use

Use the device in accordance with the information on the nameplate and in the Technical specifications (Page 61).

2.6 Checking the consignment

1. Check the packaging and the delivered items for visible damages.
2. Report any claims for damages immediately to the shipping company.
3. Retain damaged parts for clarification.
4. Check the scope of delivery by comparing your order to the shipping documents for correctness and completeness.

WARNING

Using a damaged or incomplete device

Risk of explosion in hazardous areas.

- Do not use damaged or incomplete devices.

2.7 Design of the nameplate

Example of manufacturer nameplate

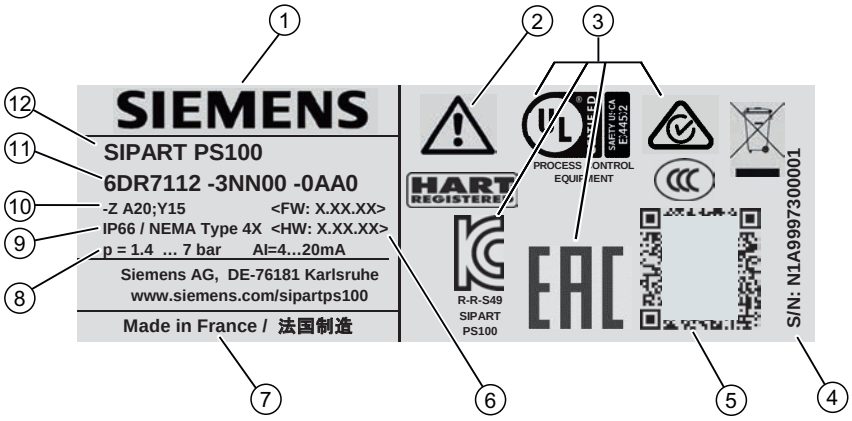

①	Manufacturer	⑦	Country of origin
②	Note operating instructions, certificates and approvals under Product documentation (Page 71)	⑧	Supply pressure PZ
③	Conformity with country-specific directives	⑨	Degree of protection
④	Serial number	⑩	Ordering supplement (Order code)
⑤	QR code to the mobile website with device-specific product information	⑪	Article number
⑥	Firmware version and hardware version	⑫	Product name

Example of explosion protection nameplate

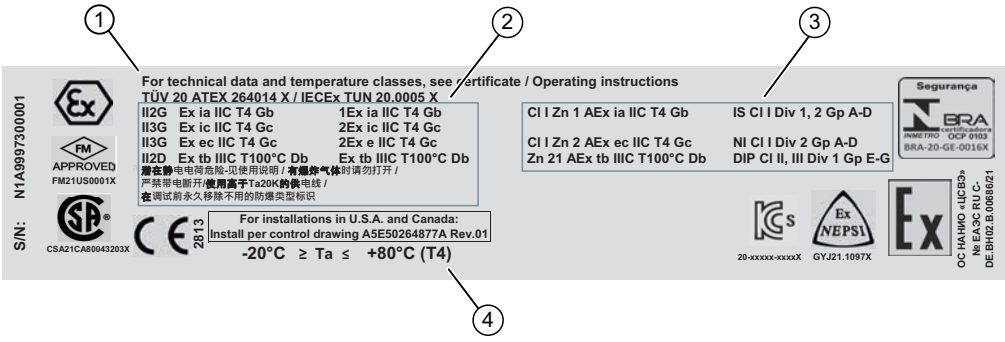

① Approvals
② ATEX/IECEx marking for hazardous area
③ FM/CSA marking for hazardous area
④ Permissible ambient temperature for operation in hazardous areas

2.8 Security information

Siemens provides products and solutions with industrial security functions that support the secure operation of plants, systems, machines, and networks.

In order to protect plants, systems, machines and networks against cyber threats, it is necessary to implement – and continuously maintain – a holistic, state-of-the-art industrial security concept. Siemens' products and solutions form one element of such a concept.

Customers are responsible for preventing unauthorized access to their plants, systems, machines and networks. These systems, machines and components should only be connected to the enterprise network or the Internet if and only to the extent necessary and with appropriate security measures (firewalls and/or network segmentation) in place.

You can find more information on protective measures in the area of industrial security by visiting:
https://www.siemens.com/industrialsecurity.

Siemens' products and solutions undergo continuous development to make them more secure. Siemens strongly recommends performing product updates as soon as they are available and using only the latest product versions. Use of product versions that are no longer supported, and failure to apply latest updates may increase customer's exposure to cyber threats.

To stay informed about product updates, subscribe to the Siemens Industrial Security RSS Feed under
https://www.siemens.com/industrialsecurity.

2.9 Transportation and storage

To guarantee sufficient protection during transport and storage, observe the following:

- Keep the original packaging for subsequent transportation.
- Devices/replacement parts should be returned in their original packaging.
- If the original packaging is no longer available, ensure that all shipments are properly packaged to provide sufficient protection during transport. Siemens cannot assume liability for any costs associated with transportation damages.

NOTICE
Insufficient protection during storage The packaging only provides limited protection against moisture and infiltration. • Provide additional packaging as necessary.

Special conditions for storage and transportation of the device are listed in Technical specifications (Page 61).

2.10 Notes on warranty

The contents of this manual shall not become part of or modify any prior or existing agreement, commitment or legal relationship. The sales contract contains all obligations on the part of Siemens as well as the complete and solely applicable warranty conditions. Any statements regarding device versions described in the manual do not create new warranties or modify the existing warranty.

The content reflects the technical status at the time of publishing. Siemens reserves the right to make technical changes in the course of further development.

Safety notes

3

3.1 Prerequisites for safe use

This device left the factory in good working condition. In order to maintain this status and to ensure safe operation of the device, observe these instructions and all the specifications relevant to safety.

Observe the information and symbols on the device. Do not remove any information or symbols from the device. Always keep the information and symbols in a completely legible state.

3.1.1 Warning symbols on the device

Symbol	Explanation
⚠	Consult operating instructions

3.1.2 Laws and directives

Observe the test certification, provisions and laws applicable in your country during connection, assembly and operation. These include, for example:

- National Electrical Code (NEC - NFPA 70) (USA)
- Canadian Electrical Code (CEC) (Canada)

Further provisions for hazardous area applications are for example:

- IEC 60079-14 (international)
- EN 60079-14 (EU)
- For Korea only:
  이 기기는 업무용(A 급) 전자파 적합기기로서 판매자
  또는 사용자는 이 점을 주의하시기 바라며 가정 외의

  지역에서사용하는 것을 목적으로 합니다

3.1.3 Conformity with European directives

The CE marking on the device shows conformity with the regulations of the following European guidelines:

Electromagnetic compatibility EMC 2014/30/EU	Directive of the European Parliament and of the Council on the harmonization of the laws of the Member States relating to electromagnetic compatibility.
Atmosphère explosible ATEX 2014/34/EU	Directive of the European Parliament and of the Council on the harmonization of the laws of the Member States relating to equipment and protective systems intended for use in potentially explosive atmospheres.
2011/65/EU RoHS	Directive of the European Parliament and of the Council on the restriction of the use of certain hazardous substances in electrical and electronic equipment

The directives applied can be found in the EU declaration of conformity for the associated device.

3.1.4 Product approval and UL compliance

Classification according to pressure equipment directive (PED 2014/68/EU)	For fluid group 1 gases; fulfills requirements according to article 4, paragraph 3 (good engineering practice SEP)
CE conformity	The applicable directives and applied standards with their revision levels can be found in the EU declaration of conformity on the Internet.
UL conformity	You can find the appropriate "Standard(s) for Safety", including the relevant versions, in the UL-CERTIFICATE OF COMPLIANCE on the Internet under Certificate (http://www.siemens.com/processinstrumentation/certificates).

WARNING

Improper device modifications

Risk to personnel, system and environment can result from modifications to the device, particularly in hazardous areas.

- Only carry out modifications that are described in the instructions for the device. Failure to observe this requirement cancels the manufacturer's warranty and the product approvals.

3.2 Use in hazardous areas

Qualified personnel for hazardous area applications

Persons who install, connect, commission, operate, and service the device in a hazardous area must have the following specific qualifications:

- They are authorized, trained or instructed in operating and maintaining devices and systems according to the safety regulations for electrical circuits, high pressures, aggressive, and hazardous media.
- They are authorized, trained, or instructed in carrying out work on electrical circuits for hazardous systems.
- They are trained or instructed in maintenance and use of appropriate safety equipment according to the pertinent safety regulations.

WARNING

Use in hazardous area

Risk of explosion.

- Only use equipment that is approved for use in the intended hazardous area and labeled accordingly.
- Do not use devices that have been operated outside the conditions specified for hazardous areas. If you have used the device outside the conditions for hazardous areas, make all Ex markings unrecognizable on the nameplate.

WARNING

Loss of safety of device with type of protection "Intrinsic safety Ex i"

If the device or its components have already been operated in non-intrinsically safe circuits or the electrical specifications have not been observed, the safety of the device is no longer ensured for use in hazardous areas. There is a risk of explosion.

- Connect the device with type of protection "Intrinsic safety" solely to an intrinsically safe circuit.
- Observe the specifications for the electrical data on the certificate and/or in Technical specifications (Page 61).

Installing/mounting

4

4.1 Basic safety notes

WARNING

High operating force with pneumatic actuators

Risk of injury when working on control valves due to the high operating force of the pneumatic actuator.

- Please observe the corresponding safety instructions for the pneumatic actuator in use.

WARNING

Exceeded maximum permissible operating pressure

Risk of injury or poisoning.

The maximum permissible operating pressure depends on the device version, pressure limit and temperature rating. The device can be damaged if the operating pressure is exceeded. Hot, toxic and corrosive process media could be released.

Ensure that maximum permissible operating pressure of the device is not exceeded. Refer to the information on the nameplate and/or in Technical specifications (Page 61).

WARNING

Electrostatic charging of nameplates

The nameplates used on the device can reach a charging capacity of 5 pF.

- Keep the device and the cables at a distance from strong electromagnetic fields.

CAUTION

Unsuitable compressed air

Device damage. As a general rule, the positioner must only be operated with dry and clean compressed air.

- Use the customary water separators and filters. An additional dryer is required in extreme cases.
- Use dryers, especially if you operate the positioner at low ambient temperatures.

CAUTION

Adhere to the following instructions before working on the control valve and when attaching the positioner

Danger of injury.

- Prior to working on the control valve, you must move the actuator and the process valve into a completely pressureless state. Proceed as follows:
  - Depressurize the actuator chambers.
  - Switch off the supply pressure PZ.
  - Secure the process valve.
- Make sure that the actuator has reached the pressureless state.
- If you interrupt the supply pressure PZ to the positioner, the pressureless position can only be reached after a certain waiting time.
- When mounting, adhere strictly to the following order to avoid injuries or mechanical damage to the positioner/mounting kit:
  - Mount the positioner mechanically.
  - Electric connection.
  - Connect supply pressure PZ.
  - Commission the positioner.

NOTICE

Torque with NPT screwed gland

Device damage. The maximum torque of the cable gland must not be exceeded.

- To avoid damage to the device, the NPT adapter must be held in place while the NPT gland is screwed into the NPT adapter. Refer to the section "Technical specifications > Mechanical construction (Page 63)" for the torque value.

4.1.1 Proper mounting

NOTICE

Incorrect mounting

The device can be damaged, destroyed, or its functionality impaired through improper mounting.

- Before installing ensure there is no visible damage to the device.
- Make sure that process connectors are clean, and suitable gaskets and glands are used.
- Mount the device using suitable tools. Refer to the information in Technical specifications (Page 61).

NOTICE
Freezing of the exhaust air outlets The exhaust air outlets ② can ice up. The function of the device is impaired. • Do **not** install the positioner with the base plate ① pointing up.

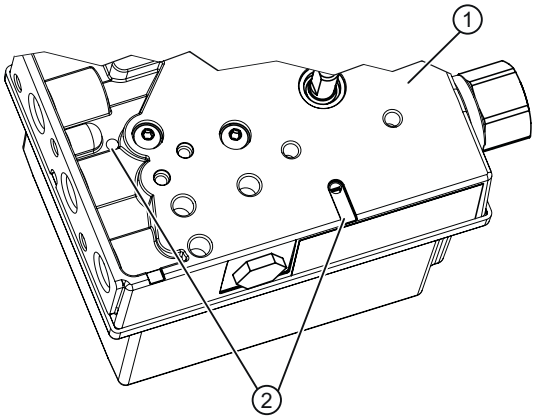

① Base plate
② Exhaust air outlets
Figure 4-1 Exhaust air outlets, base plate

4.2 Mounting to linear actuator

Requirements

Depending on the stroke height, you will need the following mounting kit:

- 3 to 35 mm mounting kit 6DR4004-8V
- 35 to 130 mm mounting kit 6DR4004-8V and additional 6DR4004-8L

Procedure

Sr. no. *)	Quantity	Name	Note
6DR4004-8L:			
①	1	Lever	For the range of stroke from 10 to 130 mm
6DR4004-8V:			
①	1	NAMUR mounting bracket IEC 60534	Standardized connection point for mount with fin, column or plane surface
②	1	Pick-up bracket	Guides the pulley with the carrier pin and rotates the lever arm.
③	2	Clamping piece	Installs the pick-up bracket on the actuator spindle
④	1	Carrier pin	Installation with pulley ⑤ on lever ⑥

Sr. no. *)	Quan-tity	Name	Note
⑤	1	Pulley	Installation with carrier pin ④ on lever ⑥
⑥	1	Lever	For the range of stroke from 3 to 35 mm
⑦	2	U–bolts	Only for actuators with columns
⑧	4	Hexagon bolt	M8x20 DIN 933–A2
⑨	2	Hexagon bolt	M8x16 DIN 933-A2, torque, section "Technical specifications > Mechanical construction (Page 63)"
⑩	6	Spring lock washer	A8 - DIN 127–A2
⑪	6	Washer	B8.4 - DIN 125–A2
⑫	2	Washer	B6.4 - DIN 125–A2
⑬	1	Spring	VD-115E 0.70 x 11.3 x 32.7 x 3.5
⑭	1	Spring lock washer	A6 - DIN 137A–A2
⑮	1	Lock washer	3.2 - DIN 6799–A2
⑯	3	Spring lock washer	A6 - DIN 127–A2
⑰	3	cylinder head screw	M6x25 DIN 7984–A2
⑱	1	Hexagon nut	M6 - DIN 934–A4
⑲	1	Square nut	M6 - DIN 557–A4
⑳	4	Hexagon nut	M8 - DIN 934–A4

*) The numbers refer to the images of the description of the installation steps below.

1. Install the clamping pieces ③ on the actuator spindle. Use spring lock washers ⑯ and cylinder head screws ⑰ for this.
2. Slide the pick-up bracket ② into the milled recesses of the clamping pieces ③.

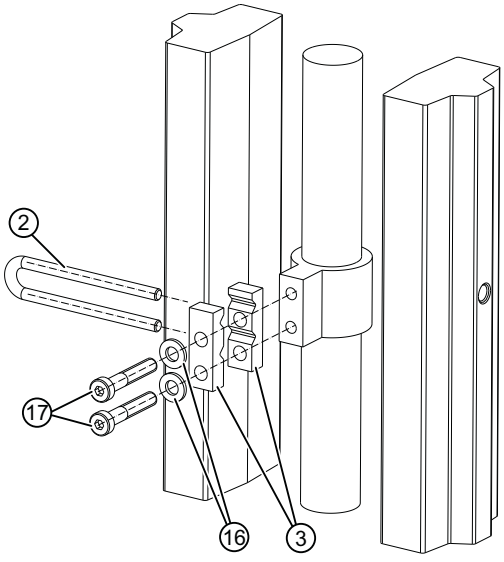

Figure 4-2 Pick-up bracket

3. Tighten the screws ⑰ so that you can still shift the pick-up bracket ②.

4. If you use a short lever, the carrier pin is already premounted. If you use the long lever 6DR4004-8L, fasten the carrier pin ④ with the existing parts to the long lever.

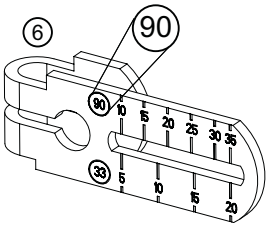

Figure 4-3 Short lever

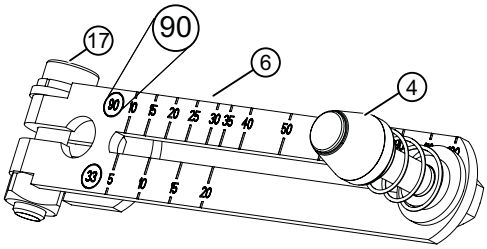

Figure 4-4 Long lever 6DR4004-8L with mounted carrier pin ④ and cylinder head screw ⑰

5. Position the carrier pin on the stroke value of the upper scale (90) of the lever ⑥. For strokes greater than 35 mm, use the long lever, article number 6DR4004-8L.
6. Push the pre-installed lever ⑥ up to the end stop on the positioner shaft. Fasten the lever ⑥ with cylinder head screw ⑰.
7. Install the mounting bracket ① at the rear side of the positioner. Use 2 hexagon bolts ⑨, 2 spring lock washers ⑩ and 2 flat washers ⑪ for this.

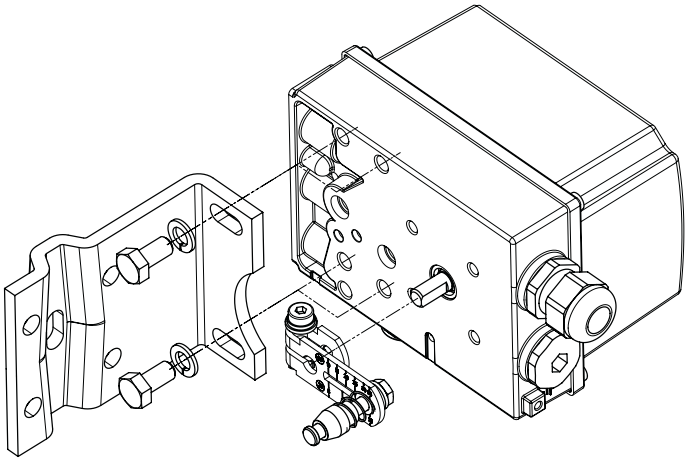

Figure 4-5 Installation with mounting bracket

8. Select the row of holes. The selection of the row of holes depends on the yoke width of the actuator. Select the row of holes in such a way that the carrier pin ④ meshes with the pick-up bracket ② near the spindle. Ensure that the pick-up bracket ② does not touch the clamping pieces ③.

9. Keep the positioner and the mounting bracket on the actuator. Ensure that the carrier pin ④ is guided inside the pick-up bracket ②.
10. Fasten the positioner on the yoke.

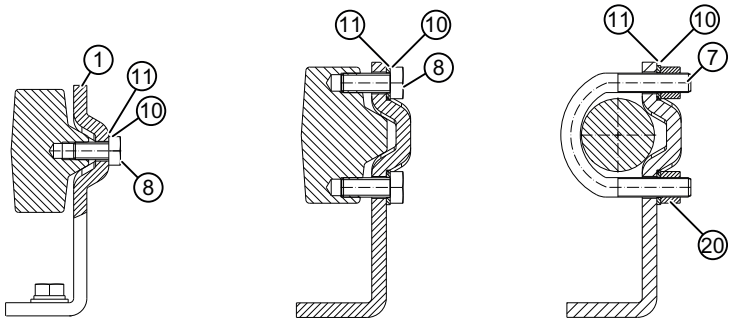

Figure 4-6 Fastening to various yoke types

4.3 Mounting to part-turn actuator

Requirements

- An actuator-specific VDI/VDE 3845 mounting console
- Mounting kit 6DR4004-8D

Procedure

"Part-turn actuator" mounting kit 6DR4004–8D			
Sr. no. *)	**Quantity**	**Name**	**Note**
①	1	Coupling wheel	Installation on positioner shaft
②	1	Carrier	Installing on the actuator shaft
③	1	Multiple plate	Display of the position, consisting of scale and pointer mark
	8	Scale	Different divisions
	2	Pointer mark	Reference point for scale
④		Mount	Actuator-specific, VDI/VDE 3845
⑤	4	Hexagon bolt	M6x12 DIN 933, torque see the section "Technical specifications > Mechanical construction (Page 63)"
⑥	4	Lock washer	S6
⑦	1	Socket cap screw	M6x16 DIN 84
⑧	1	Washer	6.4 DIN 125
⑨	1	Hex socket-head screw	M4 for coupling wheel
⑩	1	Square nut	M4 for coupling wheel
	1	Machinist's wrench	For hexagon socket-head screw ⑨

*) The numbers refer to the images of the description of the installation steps below.

1. Rest the actuator-specific VDI/VDE 3845 mount ④ on the rear side of the positioner.
2. Tighten the mount using the hexagon bolts ⑤ and lock washers ⑥.

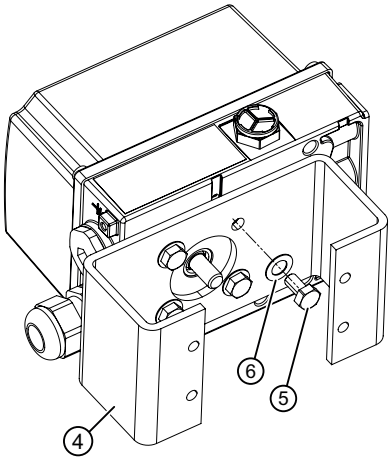

Figure 4-7 Mount

3. Insert the square nut ⑩ into the coupling wheel. Insert the hex socket head screw ⑨ into the square nut ⑩.

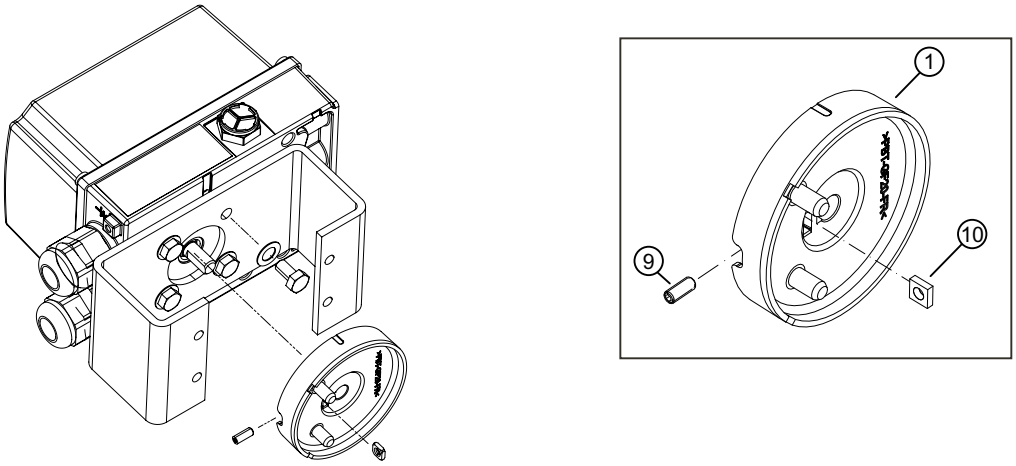

Figure 4-8 Coupling wheel

4. Push the coupling wheel ① or the stainless steel coupling up to the endstop on the positioner shaft.
5. Move the coupling wheel or the stainless steel coupling back by approximately 1 mm.
6. Tighten the hexagon socket-head screw ⑨ using the machinist's wrench provided. Maximum tightening torque = 1 Nm. If you are using the stainless steel coupling, omit the next step.

Note

Coupling wheel

Instead of the polycarbonate coupling wheel ①, it is possible to use a stainless steel coupling (article number TGX: 16300-1556).

7. Place the carrier ② on the actuator shaft.

8. Tighten the carrier ② using the cylinder head screw ⑦ and the washer ⑧.

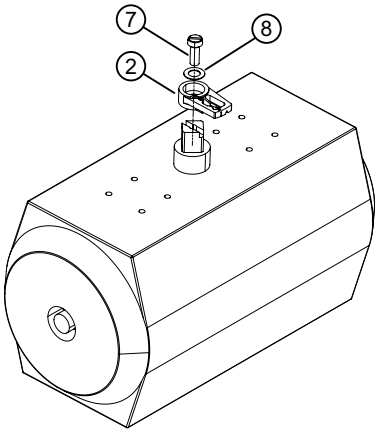

Figure 4-9 Carrier

9. Place the positioner and the mount on the actuator carefully. One of the two pins ⑫ of the coupling wheel ① must fit in the carrier ② when you do this.

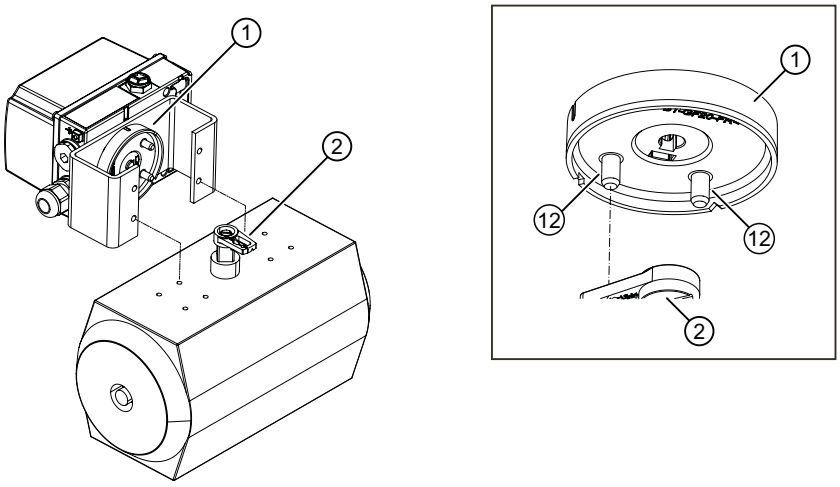

Figure 4-10 Orientation of mount

When using the stainless steel coupling (article number TGX: 16300-1556): Place the positioner and the mount on the actuator carefully. Place the stainless steel coupling on the actuator shaft.

10. Align the positioner/mount at the center of the actuator.
11. Tighten the positioner/mount unit.

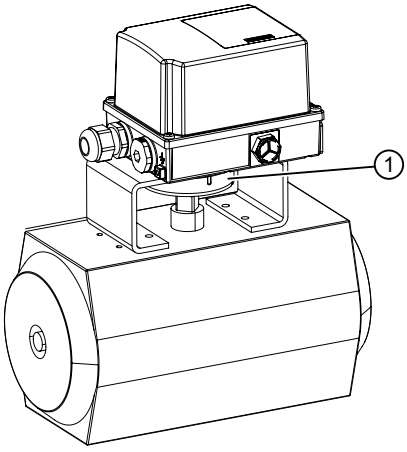

Figure 4-11 Positioner with mount attached to the part-turn actuator

Connecting 5

5.1 Basic safety notes

WARNING

Lever for position detection

Danger of crushing and shearing with mounting kits which use a lever for position detection. During commissioning and ongoing operation, severing or squeezing of limbs could occur as a result of the lever. Risk of injury when working on control valves due to the high operating force of the pneumatic actuator.

- Do not reach into the range of motion of the lever following mounting of the positioner and mounting kit.

WARNING

With intrinsically device version (Ex i)

Risk of explosion in hazardous areas.

For intrinsically safe device versions only the certified circuits may be connected as auxiliary power supply, control and signal circuits.

- Make sure that the power source of the used circuits is marked as intrinsically safe.

WARNING

Unsuitable cables, cable glands and/or plugs

Risk of explosion in hazardous areas.

- Use only cable glands/plugs that comply with the requirements for the relevant type of protection.
- Tighten the cable glands in accordance with the torques specified in Technical specifications (Page 61).
- Close unused cable inlets for the electrical connections.
- When replacing cable glands, only use cable glands of the same type.
- After installation, check that the cables are seated firmly.

NOTICE

Torque with NPT screwed gland

Device damage. The maximum torque of the cable gland must not be exceeded.

- To avoid damage to the device, the NPT adapter must be held in place while the NPT gland is screwed into the NPT adapter. Refer to the section "Technical specifications > Mechanical construction (Page 63)" for the torque value.

NOTICE

Standard cable gland/torque

Device damage.

- Owing the reasons pertaining to tightness (IP enclosure rating) and the required tensile strength, only use the cables having a diameter ≥ 8 mm for standard M20x1.5 cable gland, or use a suitable seal insert in case of smaller diameters.
- In the NPT version, the positioner is delivered with a coupling. When inserting a counter piece in the coupling, ensure that the maximum permissible torque of 10 Nm is not exceeded.

NOTICE

Condensation in the device

Damage to device through formation of condensation if the temperature difference between transportation or storage and the mounting location exceeds 20 °C (36 °F).

- Before taking the device into operation, let the device adapt for several hours in the new environment.

NOTICE

Ambient temperature too high

Damage to cable sheath.

- At an ambient temperature ≥ 60 °C (140 °F), use heat-resistant cables suitable for an ambient temperature at least 20 °C (36 °F) higher.

WARNING

Eliminating or reducing the sources of ignition within the equipment

Potential fire hazard.

- The product must be connected to an energy-limited circuit.
- Connect the device according to the information in Input (Page 61).

WARNING

Improper power supply

Risk of explosion in hazardous areas as result of incorrect power supply.

- Connect the device in accordance with the specified power supply and signal circuits. The relevant specifications can be found in the certificates, in Technical specifications (Page 61) or on the nameplate.

WARNING

Lack of equipotential bonding

Risk of explosion through compensating currents or ignition currents through lack of equipotential bonding.

- Ensure that the device is potentially equalized.

Exception: It may be permissible to omit connection of the equipotential bonding for devices with type of protection "Intrinsic safety Ex i".

WARNING

Unprotected cable ends

Risk of explosion through unprotected cable ends in hazardous areas.

- Protect unused cable ends in accordance with IEC/EN 60079-14.

WARNING

Improper laying of shielded cables

Risk of explosion through compensating currents between hazardous area and the non-hazardous area.

- Shielded cables that cross into hazardous areas should be grounded only at one end.
- If grounding is required at both ends, use an equipotential bonding conductor.

WARNING

Connecting or disconnecting device in energized state

Risk of explosion in hazardous areas.

- Connect or disconnect devices in hazardous areas only in a de-energized state.

Exceptions:

- Devices having the type of protection "Intrinsic safety Ex i" may also be connected in energized state in hazardous areas.

WARNING

Incorrect selection of type of protection

Risk of explosion in areas subject to explosion hazard.

This device is approved for several types of protection.

1. Decide in favor of one type of protection.
2. Connect the device in accordance with the selected type of protection.
3. In order to avoid incorrect use at a later point, make the types of protection that are not used permanently unrecognizable on the nameplate.

Two-wire mode

NOTICE

Connection of voltage source to current input

Device damage if a voltage source is connected to the current input I_w (terminals 6 and 7).

- Never connect the current input I_w to a low-resistance voltage source, otherwise the positioner may be destroyed.
- Always use a high-impedance power source.
- Observe the static destruction limit specified in the "Technical specifications (Page 61)".

Note

Improvement of interference immunity

- Lay signal cables separate from cables with voltages > 60 V.
- Use cables with twisted wires.
- Keep the device and the cables at a distance from strong electromagnetic fields.
- Observe the communication conditions described in the section Technical specifications (Page 61).
- Use shielded cable to guarantee the full specification according to HART.

5.2 Grounding

The positioner is grounded via the mounting kit or via grounding with thread M4 on the enclosure, ⑨ in the figure "Overview of the device components (Page 7)".

5.3 Electrical connection

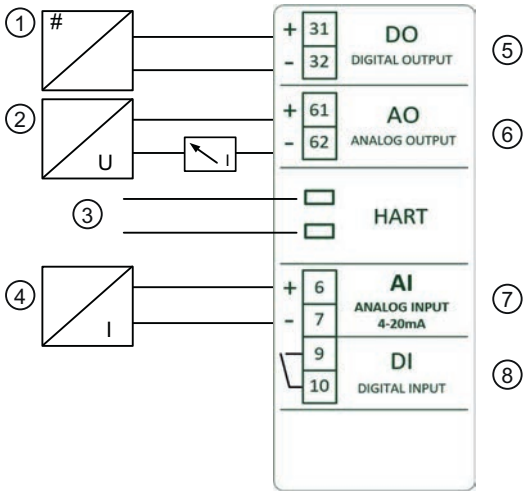

① Digital input or switching amplifier
② Power source 12 to 30 V DC
③ HART connector
④ Signal source 4 to 20 mA
⑤ Digital output
⑥ Analog output of position feedback
⑦ Analog input current input 4 to 20 mA
⑧ Digital input (floating contact)

Figure 5-1 Wiring diagram

5.4 Pneumatic connection

WARNING

Supply pressure PZ

For safety reasons, the supply pressure PZ can be fed after installation only if the positioner is switched to the "NO INIT" mode when an electrical signal is available.

Note

Specifications regarding air quality

Observe the specifications regarding the air quality, see section "Technical specifications > Pneumatic data (Page 62)".

Note

Leakage

Besides continuous air consumption, a leakage can cause the positioner to try to compensate the position deviation. This will result in premature wear in the entire control device.

- Check if there is leakage with "LEAKAGE TEST".
- If there is leakage, check the pneumatic connections for leaks.

Structure of pneumatic connection (Page 34)

Behavior in case of failure of the electrical auxiliary power and/or the supply pressure PZ (Page 34)

5.4.1 Structure of pneumatic connection

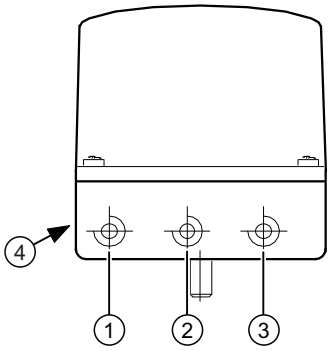

① Output: Actuating pressure Y2 *)
② Input: Supply pressure PZ
③ Output: Actuating pressure Y1
④ Exhaust air outlet with sound absorber, thread G¼

*) for double-acting actuators

Figure 5-2 Pneumatic connection, example

5.4.2 Behavior in case of failure of the electrical auxiliary power and/or the supply pressure PZ

Overview

CAUTION

Note the following before working on the control valve

Note that, before working on the control valve, you must first move it to the safety position. Make sure that the process valve has reached the safety position. If you only interrupt the supply pressure PZ to the positioner, the safety position can in some cases only be attained after a certain delay period.

The difference between a failure of supply pressure PZ and a failure of electrical auxiliary power:

- Failure of **electrical auxiliary power** means the failure of the signal source at the analog input 4 to 20 mA.
- Failure of the **supply pressure PZ**

Actuator type	Behavior in case of failure: The actuator moves into safety position	
	Failure of electrical auxiliary power	**Failure of supply pressure PZ**
Single-acting	Y1 = vented	Y1 = vented
Double-acting	Y1 = pressurized Y2 = vented	Y1 = closed Y2 = closed

Local operation

Navigating in "NO INIT" operation mode

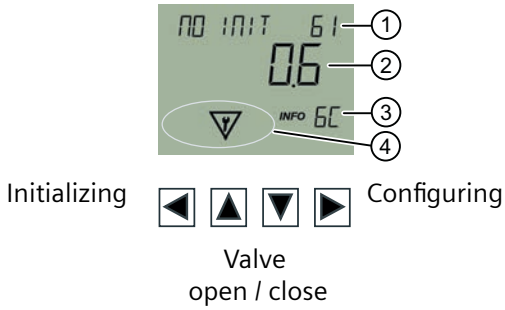

① Operation mode and setpoint in percent
② Angle of position detection in degrees
③ Info (Page 50)
④ Symbols for device status (Page 49)

Navigating in "AUTO" and "MANUAL" operation mode

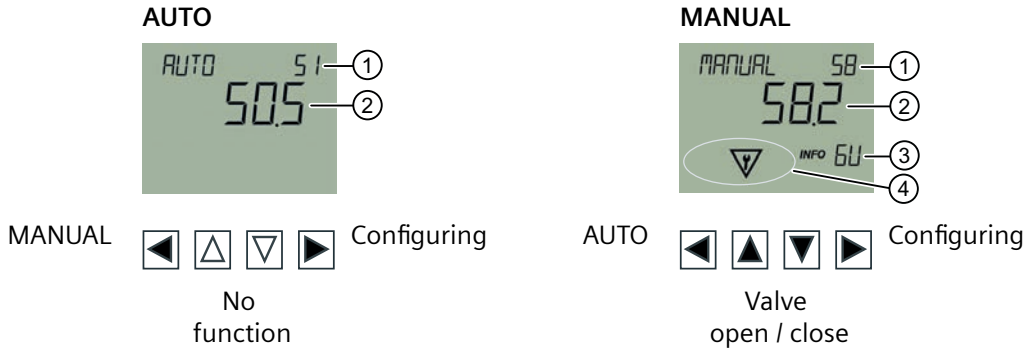

① Operation mode and setpoint in percent
② Valve position as a percentage
③ Info (Page 50)
④ Symbols for device status (Page 49)

Navigating in parameter view and edit view

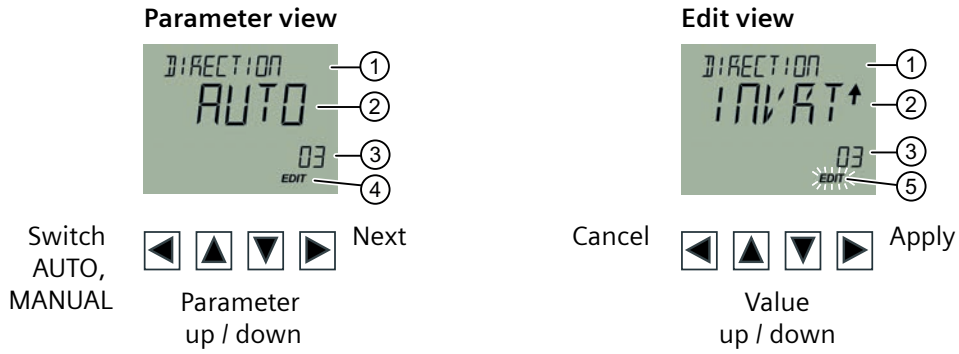

① In the parameter view: Parameter name
In the Edit view: Name and unit of the parameter (alternating)

② Parameter value

③ Parameter ID

④ EDIT permanently enabled

⑤ EDIT flashes

Commissioning 7

7.1 Basic safety notes

WARNING

Risk of crushing through lever of position detection

When the positioner is commissioned, immediate movement of the valve may occur.

If the positioner is in "NO INIT" mode, the movement of the valve starts immediately as soon as you press the left button on the positioner.

Danger of crushing and shearing with mounting kits which use a lever for position detection. During commissioning and during ongoing operation, severing or squeezing of limbs could occur as a result of the lever. Risk of injury when working on control valves due to the high operating force of the pneumatic actuator.

- Do not reach into the range of motion of the lever following mounting of the positioner and mounting kit.

WARNING

Improper commissioning in hazardous areas

Device failure or risk of explosion in hazardous areas.

- Do not commission the device until it has been mounted completely and connected in accordance with the information in Installing/mounting (Page 19).
- Before commissioning take the effect on other devices in the system into account.

WARNING

Commissioning and operation with pending error

If an error message appears, correct operation in the process is no longer guaranteed.

- Check the gravity of the error.
- Correct the error.
- If the error still exists:
  - Take the device out of operation.
  - Prevent renewed commissioning.

WARNING

Loss of explosion protection

Risk of explosion in hazardous areas if the device is open or not properly closed.

- Close the device as described in Technical specifications (Page 61).

WARNING

Opening device in energized state

Risk of explosion in hazardous areas

- Only open the device in a de-energized state.
- Check prior to commissioning that the cover, cover locks, and cable inlets are assembled in accordance with the directives.

Exception: Devices having the type of protection "Intrinsic safety Ex i" may also be opened in energized state in hazardous areas.

7.2 Initialize in "NO INIT" operating mode

If "NO INIT" appears in the display this means that the device is not initialized, Info ID (Page 50) [6C]. Commission the device by initializing it with "NO INIT".

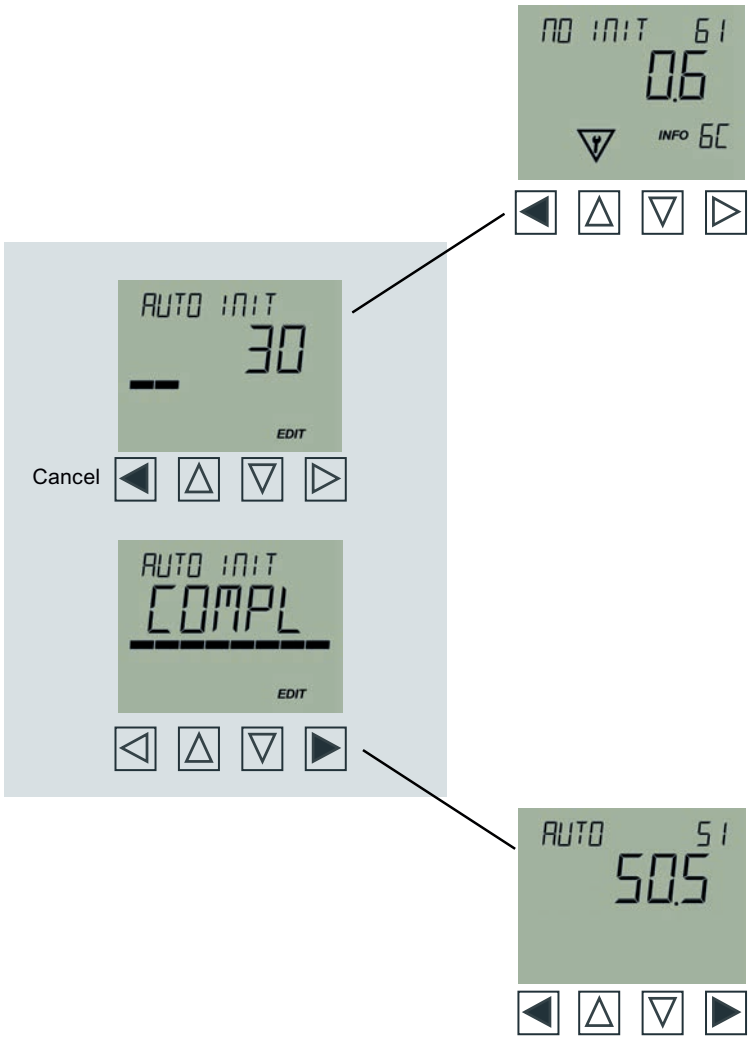

Parameter assignment and addressing

8

8.1 Overview of the menu structure

Note

Parameter ID in the local display

The overview of the menu structure contains not only the menus and parameters but also the parameter IDs. These parameter IDs are added to the further explanations of the menus and parameters in [ ]. Example "AUTO INIT" [01]

QUICK START [01]	
AUTO INIT	01
MANUAL INIT	02
LEAKAGE TEST	03
SPEED TEST	04
OVERSHOOT	05
VALVE TYPE	06 [1]
APPLICATION	07

SETUP [02]	
DIGITAL IN	01 [2]
DIGITAL OUT	02 [2]
DIRECTION	03
CLOSE TYPE	04
CLOSE LIMIT	05
OPEN TYPE	06
OPEN LIMIT	07
DBAND LIMIT	08
DBAND VALUE	09
LEAKAGE COMP	10
MOUNTING	11

MAINT/DIAGS [03]	
SETPOINT	01
COUNTER	02
PEAK VALUES	03
RESET	04
FW VERSION	05
HW VERSION	06
REPLACE ELEC	07

[1] Visible if valve types have been stored at the factory.

[2] Visible with installed device option 1 with digital input (DI) and digital output (DQ).

8.2 QUICK START [01]

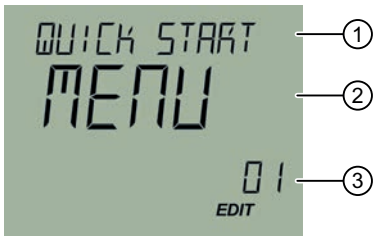

	③	①	②	**Meaning**
	01	AUTO INIT	WIZ	Enables automatic initialization of the valve. The end positions are determined automatically.
	02	MANUAL INIT	WIZ	Provides a step-by-step procedure for manual initialization of the valve. Define the end positions manually.
	03	LEAKAGE TEST	WIZ	Enables the determination of the pneumatic leakage. The result is a stroke movement as a %/minute caused by leakage.
	04	SPEED TEST	WIZ	Speed test Enables the determination of travel times in seconds.
	05	OVERSHOOT	WIZ	Enables the determination of an overshoot as a % in relation to the total stroke. An overshoot of less than 3 % is displayed as "Ok".
1)	06	VALVE TYPE	WIZ	Sets the valve type. If "NONE" is displayed, no valve type is selected. When a valve type is selected, the positioner is adapted to this valve type.
2)	07	APPLICATION		Selection of the application profile
			AUTO	Enables the default setting, suitable for all applications.
			TIGHT	Activates a control of the valve moves with maximum actuating force in the end positions (close tight).
			FAST	Enables dynamic control of the valve, optimized to a fast control response.
			EXACT	Enables precise control of the valve.
			ONOFF	Enables an open/closed behavior of the valve. The valve moves to the end positions with maximum actuating force (close tight).
			BOOST	Enables control of the valve with pneumatic booster.
			SMALL	Enables control of a small valve with damped control response.

WIZ = wizard

1) visible if valve types have been stored at the factory.

2) not visible if a valve type was selected for "VALVE TYPE" [06].

8.3 SETUP [02]

Setting the device parameters.

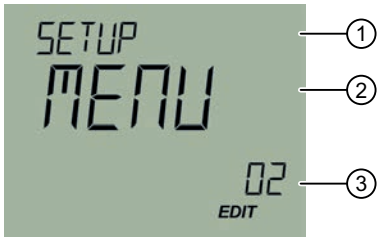

Factory-set parameter values are printed in bold in the table.

	③		①	②	**Meaning**
	01		DIGITAL IN		Digital input (DI)
				MENU	Menu for setting the digital input (DI)
		01	• BEHAVIOR DI		Behavior at digital input
				NONE	Sets the digital input to inactive.
				HOLD	Sets the digital input to keep the valve position.
				BUTTN	Sets the digital input to button lock.
				MSG	Enables the digital output.
				GO CL	Moves to the valve position when digital input is activated, as set in parameter "CLOSE LIMIT" [05].
				GO OL	Moves to the valve position when digital input is activated, as set in parameter "OPEN LIMIT" [07].
		02	• POLARITY DI		Polarity of the digital input
				HIGH	Normally Open: Normally open contact
				LOW	Normally Close: Normally closed contact
	02		DIGITAL OUT		Digital output (DO)
				MENU	Menu for setting the digital output (DO)
		01	• BEHAVIOR DO		Behavior at digital output
				NONE	Sets the digital output to inactive.
				ERR	Enables the digital output in case of control deviation or device error.
				ERR M	Enables the digital output in case of manual operation, control deviation or device error.
				POS	Enables the digital output when the value of the "DO POS LIMIT" [03] parameter is reached.
		02	• POLARITY DO		Polarity of the digital output
				HIGH	Normally Open: Normally open contact
				LOW	Normally Close: Normally closed contact
		03	• DO POS LIMIT	0.0 … **10.0** … 100.0	Specifies the value as a percentage at which the digital output is enabled. Values < 50 correspond to a **low** limit value. Values ≥ 50 correspond to a **high** limit value.
	03		DIRECTION	**AUTO**	Sets the operating direction of the valve defined during initialization.
				INVRT	Inverts the operating direction of the valve defined during initialization.

	③	①	②	**Meaning**
*)	04	CLOSE TYPE	**FAST**	Sets the valve to precise behavior at endstop.
			TIGHT	Sets the valve to behavior with maximum actuating force at endstop.
			SLOW	Sets the valve to precise behavior at endstop.
			LIMIT	Limits the control range to the value set in the parameter "CLOSE LIMIT" [05].
*)	05	CLOSE LIMIT	**0.0** ... 100.0	Sets the value in % up to which the valve closes.
*)	06	OPEN TYPE	**FAST**	Sets the valve to precise behavior at endstop.
			TIGHT	Sets the valve to behavior with maximum actuating force at endstop.
			SLOW	Sets the valve to precise behavior at endstop.
			LIMIT	Limits the control range to the value set in the parameter "OPEN LIMIT" [07].
*)	07	OPEN LIMIT	0.0 ... **100.0**	Sets the value in % up to which the valve opens.
*)	08	DBAND LIMIT	0.1 ... 3.0	Sets the maximum range of the deadband in %.
*)	09	DBAND VALUE	x.x	Displays the current value of the deadband.
	10	LEAKAGE COMP	**ON**	Enables the leakage compensation.
			OFF	Disables the leakage compensation. The function is reset by disabling.
	11	MOUNTING	**AUTO**	Sets the positioner to mounting to standard actuator.
			LEVER	Sets the positioner to mounting on linear actuator, carrier pin mounted on lever.
			STEM	Sets the positioner to mounting to linear actuator, carrier pin mounted on spindle.
			TURN	Sets the positioner to mounting to part-turn actuator.

*) visible when "AUTO" is selected in "QUICK START [01] > APPLICATION [07]".

8.4 MAINT/DIAGS [03]

Service menu

③		①	②	**Meaning**
01		SETPOINT	##.##	Displays the setpoint in mA. Status bar ① alternately displays the parameter name or the set unit.
02		COUNTER	MENU	
	01	• OPERATE TIME	####	Displays the number of operating hours.
	02	• DIRECTN CHNG	####	Displays the number of direction changes.
	03	• STROKES	####	Displays the totalized distances. A distance corresponds to a sum of 200 %.
	04	• PILOT 1	####	Displays the number of switching cycles of pilot valve 1.
	05	• PILOT 2	####	Displays the number of switching cycles of pilot valve 2.
03		PEAK VALUES	MENU	
	01	• TIME OPEN	##.#	Displays the duration in seconds until the valve is open.
	02	• TIME CLOSE	##.#	Displays the duration in seconds until the valve is closed.
	03	• ELEC TMP MIN	##.##	Displays the lowest measured electronics temperature in °C.
	04	• ELEC TMP MAX	##.##	Displays the highest measured electronics temperature in °C.
04		RESET	FACT	Resets the device to the factory settings.
05		FW VERSION	#####	Displays the FW version of the device.
06		HW VERSION	#####	Displays the HW version of the device.
07		REPLACE ELEC	WIZ	Provides a step-by-step procedure to synchronize new electronics. PIN LOCK is 2457.

Troubleshooting

9

9.1 Device status symbols

The device status is displayed on the display with the help of symbols. Alarms are displayed on the display in the measurement view as symbol in the bottom line of the display. If multiple diagnostic states are pending at the same time, the symbol for the most critical status is displayed. The table below shows the possible causes for the device status and measures for the user or service. The order of the symbols in the table corresponds to the priority of the device status, starting with the most critical message.

Display symbols - NAMUR NE 107			**Meaning**
Symbol	**Device status**	**Priority ***	**Priority ***
	Failure	1	**Cause:** Output signal invalid due to fault in the field device or in the peripherals. **Measure:** Maintenance is required immediately.
	Function test	2	**Cause:** Output signal temporarily invalid (e.g. frozen) due to work being performed on the device. **Measure:** Manual mode over HMI or disable the engineering system.
	Out of specification	3	**Cause:** Deviations from permissible ambient or process conditions detected by the device (by means of self-monitoring or based on warnings/errors in the device) indicate that the measured value is unreliable or that deviations from the set value in the actuators are most likely greater than anticipated under normal operating conditions. Process or ambient conditions can damage the device or result in unreliable results.
	Maintenance required	4	**Cause:** The output signal is still valid but the wear reserve is coming to an end and/or functional restrictions will occur soon. **Measure:**Maintenance is recommend as soon as possible.

* The smallest number indicates the highest level of error severity.

9.2 Info IDs, error messages and corrective measures

The following table shows the IDs of diagnostic messages and possible causes and instructions for corrective actions.

Messages on the local display (Page 37)			Meaning / cause	Remedy
ID	**Symbol**	**Status line**		
6A		NO MOVEMENT	• Errors during initialization • Insufficient supply of compressed air • Mounting kit not correctly mounted. • Valve blocked	Eliminate the cause. Start the initialization process.
6C		NO INIT + setpoint as percentage	Positioner is not initialized	Press left button to start the initialization of the positioner.
6d		-	• Measuring range of position detection exceeded • Swivel area of the valve is larger than 110°. • Positioner installed on a different actuator without re-initialization. • End positions of valve are worn.	Check the mounting kit and the wear. Start the initialization process.
6E		DI-HOLD + setpoint as percentage	Maintain valve position is enabled through digital input (DI).	Configured response. If required, adjust setting in parameter "DIGITAL IN" [01].
6F		DI-GO CL + setpoint as percentage	Approach valve position is enabled through digital input (DI).	Configured response. If required, adjust setting in parameter "CLOSE LIMIT" [05].
6H		DI-GO OL + setpoint as percentage	Approach valve position is enabled through digital input (DI).	Configured response. If required, adjust setting in parameter "OPEN LIMIT" [07].
6L	-	-	Digital input (DI) is enabled. This status is reported via the digital output (DO). Setting in parameter "BEHAVIOR DI [01] > MSG"	Not necessary.
6N		SPAN TO HIGH	• Maximum angle span exceeded. • Effective lever arm is not adjusted to the actuator travel. • Mounting kit not correctly mounted.	Position the carrier pin at a larger stroke value. Check the mounting kit. Use the electropneumatic positioner SIPART PS2 from Siemens with a swivel area of 185° (special design).
6P		SPAN TO LOW	• Minimum angle span underrun. • Effective lever arm is not adjusted to the actuator travel. • Mounting kit not correctly mounted.	Position the carrier pin at a smaller stroke value. Check the mounting kit.

Messages on the local display (Page 37)			Meaning / cause	Remedy
ID	Symbol	Status line		
6r		-	A pneumatic leakage is present.	Remedy the pneumatic leakage of the actuator and the piping.
6t		-	• Control deviation • Insufficient supply of compressed air • Mounting kit not correctly mounted. • Valve blocked	Eliminate the cause.
6U		MANUAL	Device in manual mode.	Use the left button to switch the positioner to the "AUTO" operation mode.
6Y		-	Wizard started	A wizard has been started. Wait until the wizard is completed.
L		-	Button lock is enabled. Digital input (DI) is enabled. Configured response. Setting in parameter "BEHAVIOR DI [01] > BUTTN"	Connect the digital input (DI).
LP		-	Parameters and device functions are write-protected with a user PIN.	Disable the write protection with user PIN LOCK 2457.

See also

QUICK START [01] (Page 44)

SETUP [02] (Page 45)

Service and maintenance 10

10.1 Basic safety notes

10.1.1 Maintenance

The device is maintenance-free. However, a periodic inspection according to pertinent directives and regulations must be carried out.

An inspection can include, for example, check of:

- Ambient conditions
- Seal integrity of the process connections, cable entries, and cover
- Reliability of power supply, lightning protection, and grounds

WARNING

Dust layers above 5 mm

Risk of explosion in hazardous areas.

Device may overheat due to dust build up.

- Remove dust layers in excess of 5 mm.

NOTICE

Penetration of moisture into the device

Damage to device.

- Make sure when carrying out cleaning and maintenance work that no moisture penetrates the inside of the device.

10.2 Cleaning

Cleaning the enclosure

- Clean the outside of the enclosure with the inscriptions and the display window using a cloth moistened with water or a mild detergent.
- Do not use any aggressive cleansing agents or solvents, e.g. acetone. Plastic parts or the painted surface could be damaged. The inscriptions could become unreadable.

WARNING

Electrostatic charge

Risk of explosion in hazardous areas if electrostatic charges develop, for example, when cleaning plastic surfaces with a dry cloth.

- Prevent electrostatic charging in hazardous areas.

10.3 Maintenance and repair work

Send defective devices to the repairs department, together with information on the malfunction and the cause of the malfunction. When ordering replacement devices, please provide the serial number of the original device. You can find the serial number on the nameplate.

WARNING

Impermissible repair of the device

- Repair must be carried out by Siemens authorized personnel only.

WARNING

Maintenance during continued operation in a hazardous area

There is a risk of explosion when carrying out repairs and maintenance on the device in a hazardous area.

- Isolate the device from power.

- or -

- Ensure that the atmosphere is explosion-free (hot work permit).

WARNING

Impermissible accessories and spare parts

Risk of explosion in areas subject to explosion hazard.

- Only use original accessories or original spare parts.
- Observe all relevant installation and safety instructions described in the instructions for the device or enclosed with the accessory or spare part.

WARNING

Improper connection after maintenance

Risk of explosion in areas subject to explosion hazard.

- Connect the device correctly after maintenance.
- Close the device after maintenance work.

Refer to Electrical connection (Page 33).

10.4 Return procedure

Enclose the bill of lading, return document and decontamination certificate in a clear plastic pouch and attach it firmly to the outside of the packaging. Any devices/replacement parts which are returned without a decontamination declaration will be cleaned at your expense before further processing. For further details, refer to the operating instructions.

See also

Return document (http://www.siemens.com/processinstrumentation/returngoodsnote)

Decontamination declaration (http://www.siemens.com/sc/declarationofdecontamination)

10.5 Replace electronics

Overview screen

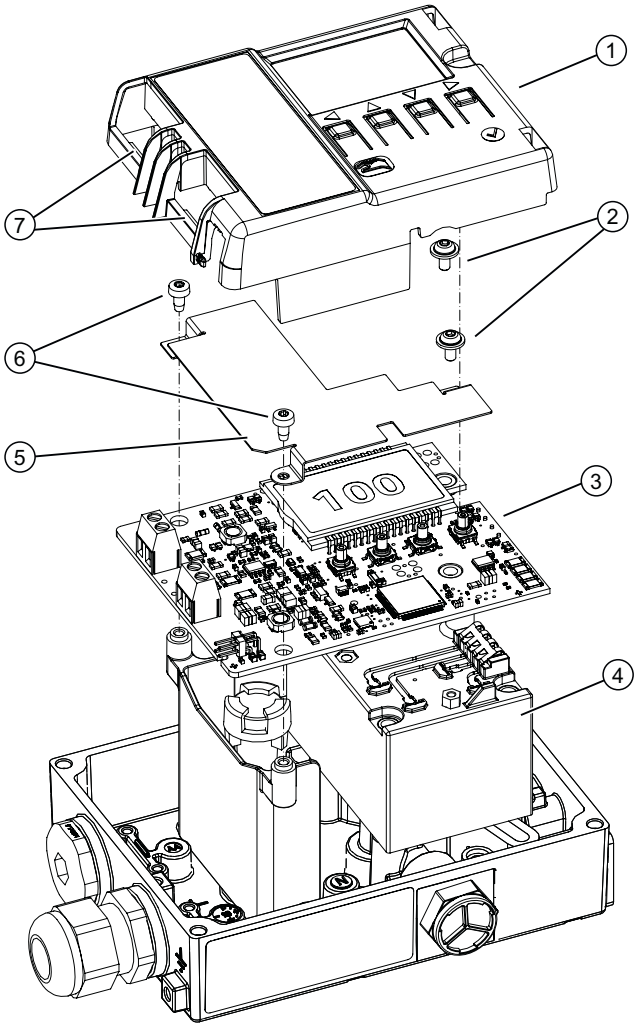

① Module cover
② Fixing screws with large screw head
③ Electronics
④ Pneumatic block
⑤ Metal cover (only for device design with HART and Ex)
⑥ Fixing screws with small screw head
⑦ Bar

Figure 10-1 Replace electronics

Procedure

1. Loosen the 4 fixing screws of the enclosure lid. Remove the enclosure lid.
2. Disconnect the power supply cables or de-energize the cables.
3. Disconnect all other electrical connections of the device.

4. Remove the module cover ① by gripping the module cover at the bars ⑦ and lifting it over the terminals. The module cover detaches from the electronics.
5. Unscrew the 4 fixing screws ② and ⑥.
   The following applies for the device version with HART and/or explosion protection: Remove the metal cover ⑤.
6. Remove the electronics.
7. Snap the new electronics ③ onto the 4 latches.
   The following applies for the device version with HART and/or explosion protection: Place the metal cover on the device ⑤. Make sure that the metal cover is undamaged and not bent. The metal cover must be put on without force.
8. Screw in the 4 fixing screws ② and ⑥. Tighten the screws.
9. Place the module cover on the side opposite the terminals. Then press the module cover ① over the terminals. The module cover snaps in noticeably.
10. Connect the power supply cables. Supply the lines with voltage.
11. The following step is necessary in addition for linear actuators:
    - In the "MAINT/DIAGS" menu, select the parameter "07 REPLACE ELEC".
    - Configure the PIN "2457".
    - Use the two center buttons to move the lever of the mounting kit to the horizontal position.
    - Confirm the setting with the right-hand button. The display shows "COMPL".
12. Initialize the positioner as described in the section "Commissioning (Page 39)".
13. Put on the enclosure lid. Tighten the fixing screws of the enclosure lid.

10.6 Replacing the pneumatic block

Procedure

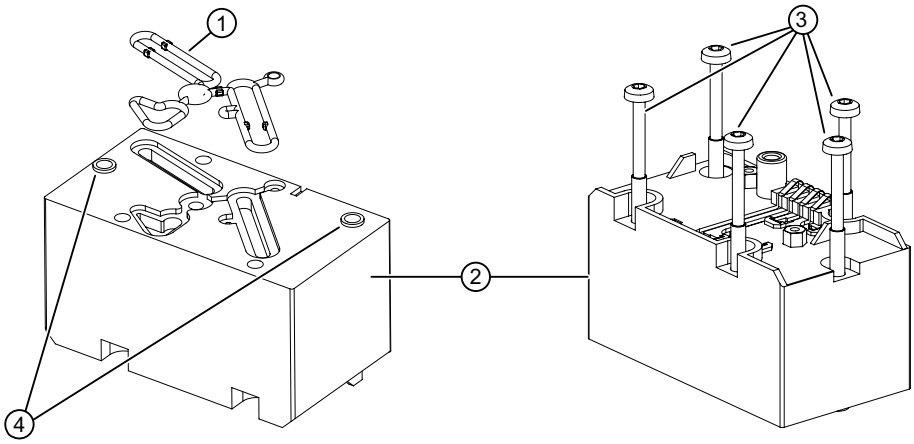

① Cord seal
② Pneumatic block
③ Mounting screws
④ Centering elements

Figure 10-2 Removing the pneumatic block

Removing

1. Switch off the supply pressure PZ and depressurize the actuator.
2. Remove the electronics as described in the section "Replace electronics (Page 56)".
3. Unscrew the fixing screws ③ of the pneumatic block ②.
   The single-acting pneumatic block has 4 screws and the double-acting pneumatic block has 5 screws.
4. Remove the pneumatic block ② and the cord seal ①.
5. Blow any dirt off the surface on which the pneumatic block was placed.

Installation

1. Insert the new cord seal ① into the new pneumatic block ②.
2. Press the cord seal ① evenly into the groove on the pneumatic block ②.
3. Place the new pneumatic block on the base plate.
   Make sure that the pneumatic block engages with the centering elements ④ on the base plate.
4. Screw the supplied fixing screws ③ into the pneumatic block.
5. Tighten the fixing screws with a torque of 1.1 Nm.
6. Install the electronics as described in the section "Replace electronics (Page 56)".
7. Switch on the supply pressure PZ.
8. Initialize the positioner using the "AUTO INIT (Page 44)" parameter in the QUICK START [01] menu.

10.7 Disposal

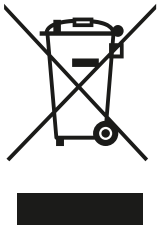

Devices described in this manual should be recycled. They may not be disposed of in the municipal waste disposal services according to the Directive 2012/19/EC on waste electronic and electrical equipment (WEEE).

Devices can be returned to the supplier within the EC, or to a locally approved disposal service for eco-friendly recycling. Observe the specific regulations valid in your country.

Further information about devices containing batteries can be found at: Information on battery/product return (WEEE) (https://support.industry.siemens.com/cs/document/109479891/)

Technical specifications 11

11.1 Input

Analog input (AI), terminal 6 and 7	
Nominal signal range	4 ... 20 mA
Minimum current to maintain the operation	3.8 mA
Maximum load voltage 4 ... 20 mA	6.5 V corresponds to 325 Ω at 20 mA
Maximum load voltage HART	8.4 V corresponds to 420 Ω at 20 mA
Static destruction limit	± 40 mA
Type of communication	HART 7

Digital input (DI), terminals 9 and 10	
Galvanic isolation	Galvanically connected to analog input Galvanically isolated from the outputs
Signal status 0, floating contact open	> 300 kΩ
Signal status 1, floating contact closed	< 3 kΩ
Contact load	Can only be used for floating contact; Max. contact load < 20 µA, 3 V

11.2 Output

Analog output (AO), terminals 61 and 62	
Wiring configuration	2-wire connection
Nominal signal range	4 ... 20 mA
Fault current	< 3.6 mA
Supply voltage U_H	12 ... 30 V
External load R_B[kΩ]	≤ (U_H [V] - 12 V)/20 mA
Resolution in relation to the nominal signal range	0.05%
Maximum transmission error in relation to the nominal signal range	± 0.3%
Maximum effect of ambient temperature	± 0.1 %/10 K
Maximum residual ripple	± 0.5%
Galvanic isolation	Galvanically isolated from the other electrical inputs and outputs

Digital output (DO), terminals 31 and 32	
Maximum supply voltage U_H	35 V
"Conductive" state	• Permissible rated current 50 mA • Maximum terminal voltage 3 V • Overload-proof
"Locked" state "Locked" is also the status if the device is faulty or analog input (AI) is = 0 mA.	I < 60 µA

11.3 Rated conditions

Operating conditions	
Ambient conditions for operation according to IEC 60068-2	For use indoors and outdoors.
• Ambient temperature	-20 ... +80 °C (-4 ... +176 °F)
• Relative humidity	0 ... 100%
Pollution degree according to IEC 61010-1	2
Overvoltage category according to IEC 61010-1	II
Enclosure degree of protection	
• In accordance with IEC 60529	IP66
• In accordance with NEMA 250	Type 4X
Corrosion protection according to EN ISO 9227:2012 and EN ISO 12944:1999	
• 6DR710 polycarbonate enclosure	C5-M medium durability
• 6DR711 aluminum enclosure	C5-M medium durability
Vibration resistance	
• Harmonic oscillations (sine) according to IEC 60068-2-6	3.5 mm (0.14"), 2 ... 27 Hz, 3 cycles/axle
	98.1 m/s² (321.84 ft/s²), 27 ... 300 Hz, 3 cycles/axle
• Bump (half-sine) according to IEC 60068-2-27	150 m/s² (492 ft/s²), 6 ms, 1000 shocks/axle
• Noise (controlled digitally) according to IEC 60068-2-64	10 ... 200 Hz; 1 (m/s²)²/Hz (3.28 (ft/s²)²/Hz)
	200 ... 500 Hz; 0.3 (m/s²)²/Hz (0.98 (ft/s²)²/Hz)
	4 hours/axle

11.4 Pneumatic data

Pneumatic data	
Pneumatic operating medium	Compressed air, carbon dioxide (CO_2), nitrogen (N_2), noble gases
• Operating pressure	1.4 ... 7 bar (20.3 ... 101.5 psi)

Pneumatic data	
Quality class compressed air according to ISO 8573-1	
• Solid impurities	Class 3
• Pressure dew point	Min. 20 K (36 °F) below ambient temperature
• Oil content	Class 3
Flow rate	
• Aerate process drive	
Supply pressure 4 bar (58 psi)	7.1 m^3/h (31.3 USgpm)
Supply pressure 6 bar (87 psi)	9.8 m^3/h (43.1 USgpm)
• Depressurize process drive	
Actuating pressure 4 bar (58 psi)	13.7 m^3/h (60.3 USgpm)
Actuating pressure 6 bar (87 psi)	19.2 m^3/h (84.5 USgpm)
Leakage actuator chamber (positioner portion)	< $6 \cdot 10^{-4}$ m^3/h (0.0026 USgpm)
Consumption at operating medium in the controlled state	< $3.6 \cdot 10^{-2}$ m^3/h (0.158 USgpm)
Sound pressure level	$L_{A\ eq}$ < 75 dB $L_{A\ max}$ < 80 dB

11.5 Mechanical construction

Mechanical construction	
Supported actuator types	
• Linear actuator, range of stroke	10 to 130 mm (0.39 to 5.12")
• Part-turn actuator, angle-of-rotation range	10 to 100°
Weight, positioner without accessories	Approx. 1.0 kg (2.20 lb)
Material	
• Lid	• Aluminum • Polycarbonate
• Base plate	Aluminum
Torques	
• Lid fixing screws	1.5 Nm (1.1 ft lb)
• Part-turn actuator fixing screws DIN 933 M6x12-A2	5 Nm (3.7 ft lb)
• Linear actuator fixing screws DIN 933 M8x16-A2	12 Nm (8.9 ft lb)
• Gland pneumatic G¼	15 Nm (11.1 ft lb)
• Pneumatic gland 1/4-18 NPT	
Without sealant	12 Nm (8.9 ft lb)
With sealant	6 Nm (4.4 ft lb)
• M20 cable gland, plastic	4 Nm (3 ft lb)
• M20 cable gland, metal	6 Nm (4.4 ft lb)
• Cable gland 1/2-14 NPT metal	15 Nm (11.1 ft lb)

Mechanical construction	
• Cable gland for NPT bushing in the NPT adapter NOTE: To avoid damage to the device, the NPT adapter must be held in place while the NPT gland is screwed into the NPT adapter.	68 Nm (50 ft lb)
• Screw cap made of plastic	2.5 Nm (1.8 ft lb)
• Screw cap made of metal	4 Nm (3 ft lb)
• Pressure gauge block fixing screws	6 Nm (4.4 ft lb)
Pressure gauge	
• Material pressure gauge	Plastic, Mechanics brass
	Stainless steel, Mechanics brass nickel-plated
	Stainless steel, Mechanics stainless steel 316
• Material pressure gauge block	Anodised aluminium
	Stainless steel 316
• Degree of protection	
Plastic, Mechanics brass, Pressure gauge block anodised aluminium	IP31
Stainless steel, Mechanics brass nickel-plated, Pressure gauge block anodised aluminium	IP44
Stainless steel, Mechanics stainless steel 316, Pressure gauge block stainless steel 316	IP54
Connections, electrical	
• Screw terminals	2.5 mm^2 AWG30-14
• Cable gland	M20x1.5 or 1/2-14 NPT with NPT adapter
Connections, pneumatic	G¼ or ¼-18 NPT

11.6 Controller

Controller	
Control unit	
• Five-point controller	Adaptive
• Deadband	
Adjustable peak value	± 0.1 to 3%, plus hysteresis (half of the dead-band, but at least 0.2%)
Minimization of the peak value	Always active
Analog input (AI), terminal 6 and 7	
• Sampling interval	50 ms
• Resolution	0.05%
Position detection	
• Sampling interval	10 ms

Controller	
• Resolution at 10 mm stroke height	0.1%
• Effect of ambient temperature	0.1%/10 K

11.7 Explosion protection

11.7.1 Type key

Each device has a nameplate (Page 11). This nameplate shows a specific article number for the device. Lower-case letters are used and explained in the tables below for the variable digits in the article number. Each variable that is used stands for a different order version. You will find the order data in the FI 01 catalog (http://www.siemens.com/processinstrumentation/catalogs) on the Internet.

1	2	3	4	5	6	7	-	8	9	10	11	12	-	13	14	15	16	-	17			
6	D	R	7	1	a	*	-	b	c	N	d	e	-	f	*	g	0	-	Z	j	j	j

*= any character

6DR71 (a = 0)	6DR71 (a = 1)
Polycarbonate with window	Aluminum without window

If enclosure a =	If explosion protection b = [1]	If order code Z =	
0	1	-	or
1	1, 2, 3	-	

[1] For TIIS: b = 1; Order code Z = -ZE29

11.7.2 Markings for explosion protection

1	2	3	4	5	6	7	-	8	9	10	11	12	-	13	14	15	16	-	17			
6	D	R	7	1	a	*	-	b	c	N	d	e	-	f	*	g	0	-	Z	j	j	j

With		ATEX / IECEx	CSA	FM	EACEx
a =	b =				
0, 1	1	II 2 G Ex ia IIC T4 Gb [1)] II 3 G Ex ic IIC T4 Gc [1)]	Ex ia IIC T4 Gb Ex ic IIC T4 Gc IS Cl I Div 1, 2 Gp A-D	Cl I Zn 1 AEx ia IIC T4 Gb IS Cl I Div 1, 2 Gp A-D	1Ex ia IIC T4 Gb X 2Ex ic IIC T4 Gc X
1	2	II2G Ex ia IIC T4 Gb II3G Ex ic IIC T4 Gc II3G Ex ec IIC T4 Gc	Ex ia IIC T4 Gb Ex ic IIC T4 Gc Ex ec IIC T4 Gc IS Cl I Div 1, 2 Gp A-D Cl I Div 2 Gp A-D	Cl I Zn 1 AEx ia IIC T4 Gb Cl I Zn 2 AEx ec IIC T4 Gc IS Cl I Div 1, 2 Gp A-D NI Cl I Div 2 Gp A-D	1Ex ia IIC T4 Gb X 2Ex ic IIC T4 Gc X 2Ex ec IIC T4 Gc X
1	3	II2G Ex ia IIC T4 Gb II3G Ex ic IIC T4 Gc II3G Ex ec IIC T4 Gc II2D Ex tb IIIC T100°C Db	Ex ia IIC T4 Gb Ex ic IIC T4 Gc Ex ec IIC T4 Gc Ex tb IIIC T100°C Db IS Cl I Div 1, 2 Gp A-D Cl I Div 2 Gp A-D Cl II, III Div 1 Gp E-G	Cl I Zn 1 AEx ia IIC T4 Gb Cl I Zn 2 AEx ec IIC T4 Gc Zn 21 AEx tb IIIC T100°C Db IS Cl I Div 1, 2 Gp A-D NI Cl I Div 2 Gp A-D DIP Cl II, III Div 1 Gp E-G	1Ex ia IIC T4 Gb X 2Ex ic IIC T4 Gc X 2Ex ec IIC T4 Gc X Ex tb IIIC T100°C Db X

[1)] TIIS markings (only for the Japanese market)

CSAUK 21JPN005 for Ex ia IIC T4 Gb

CSAUK 21JPN006 for Ex ic IIC T4 Gc

11.7.3 Ambient temperature

Maximum permitted ambient temperature during operation in hazardous areas with potentially explosive atmosphere

Positioner	Temperature class T4
6DR710* and 6DR711*	-20°C ≤ Ta ≤ +80°C

11.7.4 Electrical specifications

	Basic electronics with explosion protection		
	Ex "ia"	**Ex "ic"**	**Ex "ec", "tb"**
Analog input (AI) HART / 4 ... 20 mA **Terminals 6(+) and 7(-)**			
For connecting to circuits with the following peak values	$U_i \leq 30$ V	$U_i \leq 30$ V	$U_n \leq 30$ V
	$I_i \leq 100$ mA	$I_i \leq 100$ mA	$I_n \leq 100$ mA
	$P_i \leq 750$ mW	-	-
	$C_i \leq 6$ nF	$C_i \leq 6$ nF	-
	$L_i \leq 221$ µH	$L_i \leq 221$ µH	-
Analog output (AO) 4 ... 20 mA **Terminals 61(+) and 62(-)**			
For connecting to circuits with the following peak values	$U_i \leq 30$ V	$U_i \leq 30$ V	$U_n \leq 30$ V
	$I_i \leq 100$ mA	$I_i \leq 100$ mA	$I_n \leq 100$ mA
	$P_i \leq 750$ mW	-	-
	$C_i \leq 7$ nF	$C_i \leq 7$ nF	-
	$L_i \leq 66$ µH	$L_i \leq 66$ µH	-
Analog output (AO) galvanically isolated from the analog input (AI)			
Test voltage	840 V DC, 1 s		

Dimension drawings

12

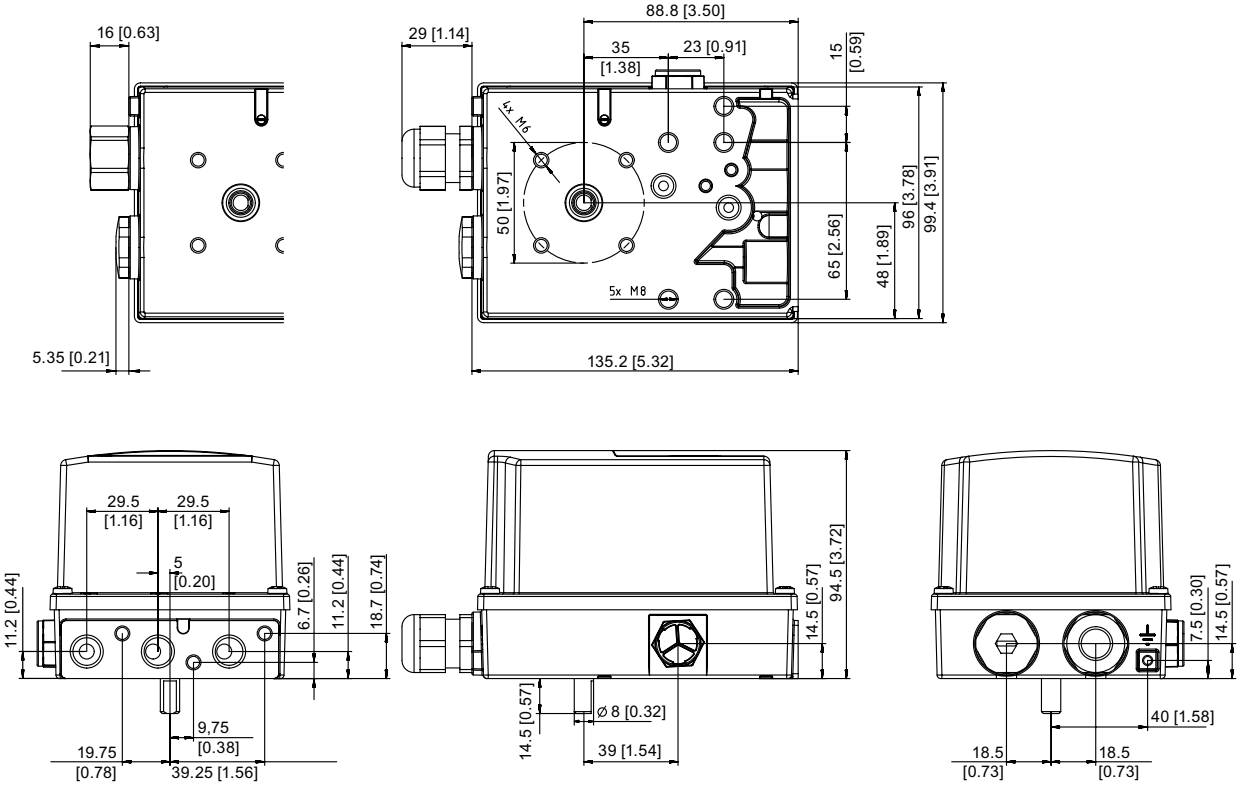

Figure 12-1 Dimension drawing, dimensions in mm (inch)

Product documentation and support

A

A.1 Product documentation

Process instrumentation product documentation is available in the following formats:

- Certificates (http://www.siemens.com/processinstrumentation/certificates)
- Downloads (firmware, EDDs, software) (http://www.siemens.com/processinstrumentation/downloads)
- Catalog and catalog sheets (http://www.siemens.com/processinstrumentation/catalogs)
- Manuals (http://www.siemens.com/processinstrumentation/documentation)
  You have the option to show, open, save, or configure the manual.
  - "Display": Open the manual in HTML5 format
  - "Configure": Register and configure the documentation specific to your plant
  - "Download": Open or save the manual in PDF format
  - "Download as html5, only PC": Open or save the manual in the HTML5 view on your PC

You can also find manuals with the Mobile app at Industry Online Support (https://support.industry.siemens.com/cs/ww/de/sc/2067). Download the app to your mobile device and scan the device QR code.

Product documentation by serial number

Using the PIA Life Cycle Portal, you can access the serial number-specific product information including technical specifications, spare parts, calibration data, or factory certificates.

Entering a serial number

1. Open the PIA Life Cycle Portal (https://www.pia-portal.automation.siemens.com).
2. Select the desired language.
3. Enter the serial number of your device. The product documentation relevant for your device is displayed and can be downloaded.

To display factory certificates, if available, log in to the PIA Life Cycle Portal using your login or register.

Scanning a QR code

1. Scan the QR code on your device with a mobile device.
2. Click "PIA Portal".

To display factory certificates, if available, log in to the PIA Life Cycle Portal using your login or register.

A.2 Technical support

Technical support

If this documentation does not completely answer your technical questions, you can enter a Support Request (http://www.siemens.com/automation/support-request).

Additional information on our technical support can be found at Technical Support (http://www.siemens.com/automation/csi/service).

Service & support on the Internet

In addition to our technical support, Siemens offers comprehensive online services at Service & Support (http://www.siemens.com/automation/serviceandsupport).

Contact

If you have further questions about the device, contact your local Siemens representative at Personal Contact (http://www.automation.siemens.com/partner).

To find the contact for your product, go to "all products and branches" and select "Products & Services > Industrial automation > Process instrumentation".

Contact address for business unit:
Siemens AG
Digital Industries
Process Automation
Östliche Rheinbrückenstr. 50
76187 Karlsruhe, Germany

Bluetooth

B

B.1 Connecting SIPART PS100 with SITRANS AW050 Bluetooth adapter

NOTICE
Adherence to the degree of protection If the SITRANS AW050 Bluetooth adapter is used with a field device, the lowest degree of protection in the overall system applies.

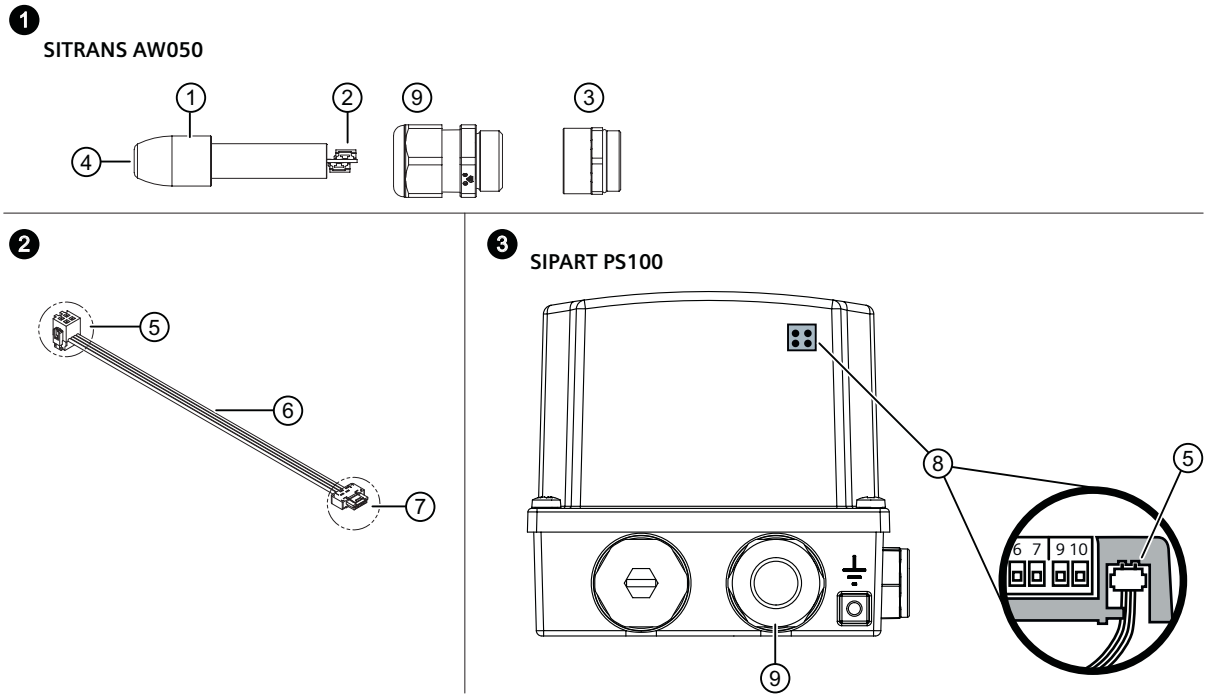

① SITRANS AW050 Bluetooth adapter
② Socket on the SITRANS AW050
③ M20-M20 adapter; not for cable gland ½-14 NPT
④ LED, under the panel
⑤ Socket of the flat cable
⑥ Flat cable
⑦ Plug of the flat cable
⑧ Service port on the SIPART PS100
⑨ Cable gland, not included in scope of delivery of the SITRANS AW050 Bluetooth Adapter Kit

Figure B-1 Connecting the SITRANS AW050 Bluetooth adapter

1. Remove the lid from the SITRANS PS100.
2. Unscrew the cable gland ⑨ on the SIPART PS100 .
3. Screw the adapter ③ onto the SIPART PS100 .

4. Screw on the cable gland ⑨ to the adapter ③.
5. Insert the plug ⑦ of the flat cable into the socket marked with a white label on the SITRANS AW050②. The marked socket ② protrudes a little further as shown in the diagram.
6. Guide the flat cable ⑥ through the cable gland ⑨ into the interior of the enclosure.
7. Push in the SITRANS AW050 Bluetooth adapter ① as far as it will go into the cable gland ⑨.
8. Tighten the cable gland ⑨.
9. Insert the socket on the flat cable ⑤ onto the service port ⑧.
10. Place the lid on the SIPART PS100. Screw the lid in place.

Scope of delivery for SITRANS AW050 Bluetooth Adapter Kit

- SITRANS AW050 Bluetooth adapter
- M20-M20 adapter
- Flat ribbon cable

B.2 Connecting a field device using the SITRANS mobile IQ app

SITRANS mobile IQ is an app for mobile devices that enables authorized service technicians to monitor and configure compatible field instrumentation over a Bluetooth interface. You can find information and the app for download at: SITRANS mobile IQ in the app store (https://support.industry.siemens.com/cs/ww/de/sc/2067)

Requirements for establishing the first connection

1. Field device is in operation.
2. There is a line of sight to the field device.
3. You are less than 10 meters away from the field device.
4. LED on the SITRANS AW050 Bluetooth adapter flashes every 2 seconds.

Requirement for connection setup

1. Android: "Location" access is enabled in the mobile device.
2. SITRANS mobile IQ is authorized to access the location.

Procedure

NOTICE
Unauthorized access It is your responsibility to prevent unauthorized access to the field device.

1. Start the SITRANS mobile IQ app.
   The smartphone or tablet automatically searches for Bluetooth field devices in the vicinity. The field devices found are listed. Select the desired field device in the device list.
2. Enter the delivery password "**Sitrans AW050!**". The delivery password must be changed during the first connection setup.
3. Assign a new password.
   – Before assigning a password, make sure that no 2 field devices with the same serial number are displayed in the selection list.
   – Assign a new password that is not the same as the default password. The new password must consist of at least 12 characters.
   – If the mobile end device, e.g. smartphone or tablet, has access protection, the SITRANS mobile IQ automatically saves the passwords of the connected field devices. You can delete individual, stored device passwords in the app.

When the connection is established, the LED on the SITRANS AW050 Bluetooth adapter blinks once a second.

Reset password

1. Select "Reset password".
2. Once you have selected "Reset password", disconnect the ribbon cable between the SITRANS AW050 and the device within 60 seconds.
3. Wait for 30 seconds.
4. Insert the ribbon cable again.

The password is reset to the default password.

B.3 Technical data

B.3.1 SITRANS mobile IQ

Software requirements	
Required Android version	7.0 or higher
Required iOS version	12.0 or higher
Bluetooth	BLE 4.2 or higher

B.3.2 SITRANS AW050 Bluetooth adapter

Operating conditions and structural design	
Ambient conditions	For use indoors and outdoors.
Ambient temperature	Observe the maximum permissible ambient temperature for the field device.
• Permissible ambient temperature for operation	-40 ... +80 °C (-40 ... +176 °F)
• Relative humidity	0 ... 100%
Degree of pollution standard IEC 61010-1	2
Overvoltage category	II
Weight	60 g
Degree of protection	• Type 4X, Type 6 according to UL 50E • IP66, IP68 according to IEC 60529
EMC	EN 61326
Input voltage range	2.2 ... 3.4 V DC
Maximum current consumption	2.5 mA
Material	Polycarbonate
Torque for cable gland	Corresponds to the specifications in the technical specifications in the section Mechanical construction (Page 63)
Communication, interface	BLE 4.2
Range	Class 2; approx. 10 m depending on mounting position
Radio approval	Contains FCC ID: RYYEYSHJN Contains IC ID: 4389B-EYSHJN CMIIT ID: 2020DJ15120

See also

Information for radio approval FCC and IC (Page 77)

Certificates (http://www.siemens.com/processinstrumentation/certificates)

B.3.3 Information for radio approval FCC and IC

Canada Regulatory Information

1. This device complies with Industry Canada's applicable licence-exempt RSSs. Operation is subject to the following two conditions:
   (1) This device may not cause interference; and
   (2) This device must accept any interference, including interference that may cause undesired operation of thedevice.
   Le présent appareil est conforme aux CNR d'Industrie Canada applicables aux appareils radio exempts de licence.L'exploitation est autorisée aux deux conditions suivantes :
   (1) l'appareil ne doit pas produire de brouillage;
   (2) l'utilisateur de l'appareil doit accepter tout brouillage radioélectrique subi, même si le brouillage est susceptibled'en compromettre le fonctionnement.
2. This product is certified as type of the portable device with Industry Canada Rules. To maintain compliance with RF Exposure requirement, please use within specification of this product.
   Ce produit est certifié comme type de l'appareil portable avec Industrie Règles de Canada. Pour maintenir l'acquiescement avec exigence Expositionde RF, veuillez utiliser dans spécification de ce produit. -IC: 4389B-EYSHJN
3. Please notify certified ID by either one of the following method on your product.
   -Contains IC: 4389B-EYSHJN
   Specifiez ID certifiée dans votre produit par une de méthode suivante.
   -Contains IC: 4389B-EYSHJN

FCC Regulatory Information

1. This device complies with part 15 of the FCC Rules. Operation is subject to the following two conditions: (1) This device may not cause harmful interference, and (2) this device must accept any interference received, including interference that may cause undesired operation.
2. Please notify certified ID by either one of the following methods on your product.
   -Contains Transmitter Module FCC ID: RYYEYSHJN
   -Contains FCC ID: RYYEYSHJN
3. CAUTION: Changes or modifications not expressly approved by the party responsible for compliance could void the use's authority to operate the equipment.
4. This product is certified as type of the portable device with FCC Rules. To maintain compliance with RF Exposure requirement, please use within specification of this product.
5. The antenna used for this transmitter must not be co-located or operating in conjunction with any other antenna or transmitter.
6. This module can change the output power depending on the circumstances by the application software which is developed by module installer. Any end user cannot change the output power.

B.4 Dimension drawing SITRANS AW050 Bluetooth adapter

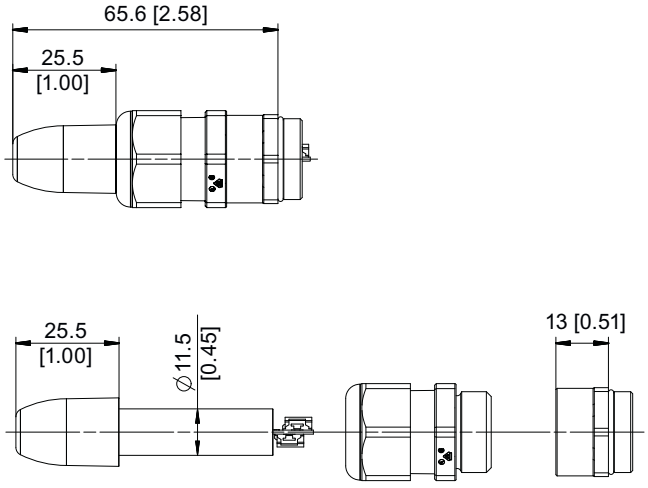

Figure B-2 Dimension drawing SITRANS AW050 Bluetooth adapter, dimensions in mm (inch)

Index

A

Actuating pressure
    Figure, 34
    Position, 7
Article number, 65
    on the nameplate, 11

B

Bluetooth adapter
    SITRANS AW050, 73
Buttons
    Position, 7

C

Cable gland
    Technical data, 63
Carrier, 24
Catalog
    catalog sheets, 71
Certificates, 15, 71
Circuit diagram
    Position, 7
Cleaning, 53
Compressed air, 19
Connecting terminals, 7
Connection
    Pneumatic, 34
Customer Support, (Refer to Technical support)

D

Display
    Position, 7
Disposal, 59
Documentation
    Edition, 10
Downloads, 71

E

Exhaust air outlet
    Position, 7

F

Freezing
    Exhaust air outlet, 21

H

Hazardous area
    Laws and directives, 15
    Laws and directives for Korea, 15
    Qualified personnel, 17
History, 10
Hotline, (Refer to Support request)

I

I/Os
    Technical data, 64

L

Laws and directives, 15

M

Maintenance, 53
    Device status symbols, 49
Manuals, 71
Material
    Technical data, 63
Material adapter
    Technical specifications, 76
Mechanical construction
    Technical data, 63, 64
    Technical specifications, 76
Modifications
    correct usage, 16
    improper, 16
Mounting kit
    Linear actuator, 21

O

Order code, 11
Ordering supplement, 11

P

Part-turn actuator
    Mounting, 24
Password, 75
    Reset, 75
Pneumatic block
    Replacing, 58
Pressure gauge
    Technical data, 64
Pressure gauge block
    Torque, 64
Product name, 11

Q

Qualified personnel, 17

R

Return procedure, 55

S

Safety position, 34
Scope of delivery, 11
    Bluetooth adapter kit, 74
Service, 72
Service and support
    Internet, 72
SITRANS AW050
    Bluetooth adapter, 73
Sound absorber
    Position, 7
Supply pressure
    Position, 7
Support, 72
Support request, 72
Symbol
    Device status, 49
    Maintenance, 49
    Operation mode, 49

T

Technical support, 72
    partner, 72
    personal contact, 72
Test certificates, 15
Tightening torque
    Technical data, (Torque)
Torque, 63, 76
Type key, 65

W

Warranty, 13
Weight
    Technical data, 63