SIEMENS

SIPART

Electropneumatic positioners SIPART PS2 (6DR5...)

Compact Operating Instructions

Introduction 1

Safety instructions 2

Installing/mounting 3

Connecting 4

Commissioning 5

Service and maintenance 6

Technical data 7

Certificates and support A

Accessory part sealing plug / thread adapter B

6DR5...
with and without HART,
with PROFIBUS PA,
with FOUNDATION Fieldbus

09/2019
A5E03436620-AE

Legal information

Warning notice system

This manual contains notices you have to observe in order to ensure your personal safety, as well as to prevent damage to property. The notices referring to your personal safety are highlighted in the manual by a safety alert symbol, notices referring only to property damage have no safety alert symbol. These notices shown below are graded according to the degree of danger.

⚠ DANGER
indicates that death or severe personal injury **will** result if proper precautions are not taken.

⚠ WARNING
indicates that death or severe personal injury **may** result if proper precautions are not taken.

⚠ CAUTION
indicates that minor personal injury can result if proper precautions are not taken.

NOTICE
indicates that property damage can result if proper precautions are not taken.

If more than one degree of danger is present, the warning notice representing the highest degree of danger will be used. A notice warning of injury to persons with a safety alert symbol may also include a warning relating to property damage.

Qualified Personnel

The product/system described in this documentation may be operated only by **personnel qualified** for the specific task in accordance with the relevant documentation, in particular its warning notices and safety instructions. Qualified personnel are those who, based on their training and experience, are capable of identifying risks and avoiding potential hazards when working with these products/systems.

Proper use of Siemens products

Note the following:

⚠ WARNING
Siemens products may only be used for the applications described in the catalog and in the relevant technical documentation. If products and components from other manufacturers are used, these must be recommended or approved by Siemens. Proper transport, storage, installation, assembly, commissioning, operation and maintenance are required to ensure that the products operate safely and without any problems. The permissible ambient conditions must be complied with. The information in the relevant documentation must be observed.

Trademarks

All names identified by ® are registered trademarks of Siemens AG. The remaining trademarks in this publication may be trademarks whose use by third parties for their own purposes could violate the rights of the owner.

Disclaimer of Liability

We have reviewed the contents of this publication to ensure consistency with the hardware and software described. Since variance cannot be precluded entirely, we cannot guarantee full consistency. However, the information in this publication is reviewed regularly and any necessary corrections are included in subsequent editions.

Siemens AG
Division Process Industries and Drives
Postfach 48 48
90026 NÜRNBERG
GERMANY

Document order number: A5E03436620
Ⓟ 07/2019 Subject to change

Copyright © Siemens AG 2019.
All rights reserved

Table of contents

1 Introduction 7
1.1 Purpose of this documentation 7
1.2 Product compatibility 7
1.3 Purpose 8
1.4 Checking the consignment 9
1.5 Nameplates 9
1.6 Security information 10
1.7 Transportation and storage 11
1.8 Notes on warranty 11
2 Safety instructions 13
2.1 Precondition for use 13
2.2 Warning symbols on the device 13
2.3 Laws and directives 13
2.4 Conformity with European directives 14
2.5 Product approval and UL compliance 14
2.6 Improper device modifications 14
2.7 Use in areas subject to explosion hazard 15
3 Installing/mounting 17
3.1 Basic safety instructions 17
3.1.1 Proper mounting 19
3.2 Mounting to linear actuator 20
3.3 Mounting to part-turn actuator 20
3.4 Installing option modules 20
3.4.1 Internal NCS module 20
4 Connecting 21
4.1 Basic safety instructions 21
4.1.1 Additional safety notes for PA and FF 25
4.2 Electrical connection 26
4.2.1 SIPART PS2 with and without HART 26
4.2.2 SIPART PS2 with PROFIBUS PA 28
4.2.3 SIPART PS2 with FOUNDATION Fieldbus 29
4.2.4 Split range 29
4.2.5 Option modules 30
4.2.5.1 Digital I/O Module (DIO) 6DR4004-6A / -8A 30

4.2.5.2 Analog Output Module (AOM) 6DR4004-6J / -8J 31
4.2.5.3 Inductive Limit Switches (ILS) 6DR4004-6G / -8G 31
4.2.5.4 Mechanic Limit Switches (MLS) 6DR4004-6K / -8K 32
4.2.6 Option device version M12 connector 33
4.2.6.1 M12 connector in basic device with and without HART 34
4.2.6.2 M12 connector in basic device with PROFIBUS PA 34
4.2.6.3 M12 connector in basic device with FOUNDATION Fieldbus 34
4.2.6.4 M12 Connector in Basic Device with Analog Output Module (AOM) 6DR4004-6J / -8J (-Z D53) 35
4.2.6.5 M12 connector in basic device with External Position Transmitter 6DR4004-1ES/-2ES (-Z D54) 35
4.2.6.6 M12 Connector in Basic Device with Digital I/O Module (DIO) 6DR4004-6A / -8A (-Z D55) 35
4.2.6.7 M12 Connector in Basic Device with Inductive Limit Switches (ILS) 6DR4004-6G /-8G (-Z D56) 36
4.2.6.8 M12 Connector in Basic Device with Mechanic Limit Switches (MLS) 6DR4004-6K (-Z D57) 36

4.3 Pneumatic connection 36
4.3.1 Pneumatic connection for 6DR5..0/1/2/3 37
4.3.2 Pneumatic connection for 6DR5..5 and 6DR5..6 38

4.4 Restrictors 38

5 Commissioning 41

5.1 Basic safety instructions 41

5.2 Overview 43

5.3 Sequence of automatic initialization 44

5.4 Parameter 44

5.5 Purge air switching 46

5.6 Commissioning linear actuators 46
5.6.1 Preparing linear actuators for commissioning 46
5.6.2 Automatic initialization of linear actuators 47
5.6.3 Manual initialization of linear actuators 49

5.7 Commissioning part-turn actuators 49
5.7.1 Preparing part-turn actuators for commissioning 49
5.7.2 Automatic initialization of part-turn actuators 50
5.7.3 Manual initialization of part-turn actuators 52

5.8 Canceling initialization 52

6 Service and maintenance 53

6.1 Basic safety instructions 53

6.2 Cleaning of the screens 54
6.2.1 Positioners 6DR5..0, 6DR5..3 and 6DR5..5 54
6.2.2 Positioners 6DR5..1, 6DR5..2 and 6DR5..6 55

6.3 Maintenance and repair work 55
6.3.1 Repair/Upgrading 56

6.4 Return procedure 56

6.5 Disposal 56

7 Technical data 57

7.1 All device versions 57
7.1.1 Rated conditions 57
7.1.2 Pneumatic data 58
7.1.3 Construction 59
7.1.4 Controller 60
7.1.5 Certificates and approvals 61
7.1.5.1 Breakdown of the article numbers 61
7.1.5.2 Device and option modules 63
7.1.5.3 Maximal permissible ambient temperature ranges 64
7.1.6 Natural gas as actuator medium 65

7.2 With and without HART 66
7.2.1 Electrical data 66
7.2.2 Electrical data for pressure sensors 67
7.2.3 Communication (HART) 68

7.3 With PROFIBUS PA / with FOUNDATION Fieldbus 68
7.3.1 Electrical data 68
7.3.2 PROFIBUS PA communication 70
7.3.3 FOUNDATION Fieldbus communication 70

7.4 Option modules 71
7.4.1 Digital I/O Module (DIO) 6DR4004-6A / -8A 71
7.4.2 Analog Input Module (AIM) 6DR4004-6F / -8F 72
7.4.3 Inductive Limit Switches (ILS) 6DR4004-6G / -8G 73
7.4.4 Analog Output Module (AOM) 6DR4004-6J / -8J 74
7.4.5 Mechanic Limit Switches (MLS) 6DR4004-6K / -8K 74
7.4.6 Internal NCS module 6DR4004-5L / 6DR4004-5LE 75
7.4.7 External position detection 76
7.4.7.1 Rated conditions for external position detection 76
7.4.7.2 External NCS sensors 6DR4004-6N/-8N 76
7.4.7.3 External Position Transmitter (NCS) 6DR4004-2ES 77
7.4.7.4 External Position Transmitter (Potentiometer) 6DR4004-1ES 78
7.4.7.5 External Position Transmitter (NCS, ILS) 6DR4004-3ES 79
7.4.7.6 External Position Transmitter (NCS, MLS) 6DR4004-4ES 80

A Certificates and support 83

A.1 Certificates 83

A.2 Technical support 83

B Accessory part sealing plug / thread adapter 85

B.1 Intended use of accessory part 85

B.2 Safety instructions for accessory part 85

B.3 Technical specifications of accessory part 86

B.4 Dimensional drawings of accessory part 87

Introduction 1

1.1 Purpose of this documentation

These instructions are a brief summary of important features, functions and safety information, and contain all information required for safe use of the device. Read the instructions carefully prior to installation and commissioning. In order to use the device correctly, first review its principle of operation.

The instructions are aimed at persons who install and commission the device.

To realize optimum performance from the device, read the complete operating instructions.

See also

SIPART PS2 product information (http://www.siemens.com/sipartps2)

1.2 Product compatibility

The following table describes the compatibility between the edition of the document, device revision, engineering system and associated Electronic Device Description (EDD).

HART

Manual edition	Comments	Device revision	Compatible version of device integration package	
09/2019	New device features	FW: 5.01.00 or higher Device revision 7 or higher	SIMATIC PDM V9.0	EDD: 23.00.00 or higher
			SIMATIC PDM V8.2 SP1	EDD: 23.00.00 or higher
			AMS Device Manager V12.5	EDD: 23.00.00 or higher
			SITRANS DTM V4.1	EDD: 23.00.00 or higher
			Field communicator	EDD: 23.00.00 or higher
01/2019	New device features	FW: 5.02.00 or higher Device revision 7 or higher	SIMATIC PDM V9.0	EDD: 23.00.00 or higher
			SIMATIC PDM V8.2 SP1	EDD: 23.00.00 or higher
			AMS Device Manager V12.5	EDD: 23.00.00 or higher
			SITRANS DTM V4.1	EDD: 23.00.00 or higher
			Field communicator	EDD: 23.00.00 or higher

PROFIBUS PA

Manual edition	Comments	Device revision	Compatible version of device integration package	
09/2019	New device features	PROFIBUS PA FW: 6.01.00 or higher	SIMATIC PDM V9.0	EDD: 22.00.00 or higher
			SIMATIC PDM V8.2 SP1	EDD: 22.00.00 or higher
			SITRANS DTM V4.1	EDD: 22.00.01 or higher
02/2016	New device features	PROFIBUS PA FW: 6.00.00 or higher	SIMATIC PDM V9.0	EDD: 22.00.00 or higher
			SIMATIC PDM V8.2 SP1	EDD: 22.00.00 or higher
			SITRANS DTM V4.0	EDD: 22.00.01 or higher

FOUNDATION Fieldbus

Manual edition	Comments	Device revision	Compatible version of device integration package	
09/2019	New manual edition	FW: 3.00.00 or higher Device revision 3	SITRANS DTM V4.1	EDD: 3.00.00 or higher
			AMS Device Manager V12.5	EDD: 3.00.00 or higher
			Field communicator	EDD: 3.00.00 or higher
05/2017	New device features	FOUNDATION Fieldbus FW: 3.00.00 or higher Device revision 3	SIMATIC PDM V9.0	EDD: 3.00.00 or higher
			SIMATIC PDM V8.2 SP1	EDD: 3.00.00 or higher
			SITRANS DTM V4.0	EDD: 3.00.00 or higher

1.3 Purpose

The electropneumatic positioner is used for the continuous control of process valves with pneumatic drives in the following industries.

- Chemicals
- Oil and gas
- Energy production
- Food and beverages
- Pulp and paper
- Water/waste water
- Pharmaceutical industry
- Offshore plants

Operate the device according to the specifications in section "Technical data (Page 57)".

For additional information, refer to the operating instructions for the device.

1.4 Checking the consignment

1. Check the packaging and the delivered items for visible damages.
2. Report any claims for damages immediately to the shipping company.
3. Retain damaged parts for clarification.
4. Check the scope of delivery by comparing your order to the shipping documents for correctness and completeness.

WARNING

Using a damaged or incomplete device

Risk of explosion in hazardous areas.

- Do not use damaged or incomplete devices.

1.5 Nameplates

Example of manufacturer nameplate

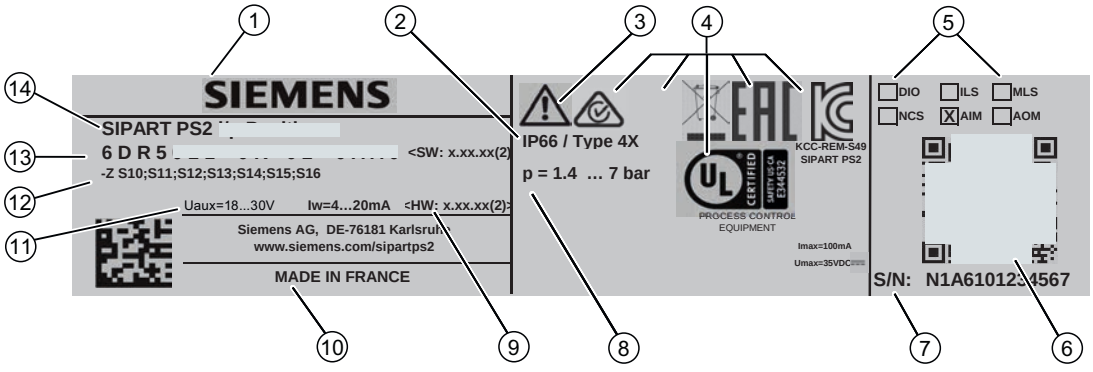

①	Manufacturer	⑧	Auxiliary power (supply air PZ)
②	Degree of protection	⑨	Software version and hardware version
③	Observe the operating instructions	⑩	Country of origin
④	Conformity with country-specific directives	⑪	Supply voltage
⑤	Built-in option modules	⑫	Ordering supplement (Order code)
⑥	QR code to the mobile website with device-specific product information	⑬	Article number
⑦	Serial number	⑭	Product name

Example of explosion protection nameplate

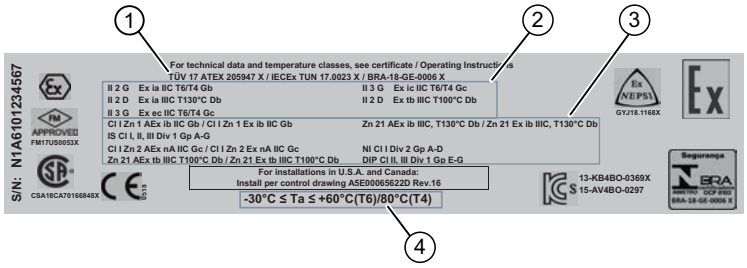

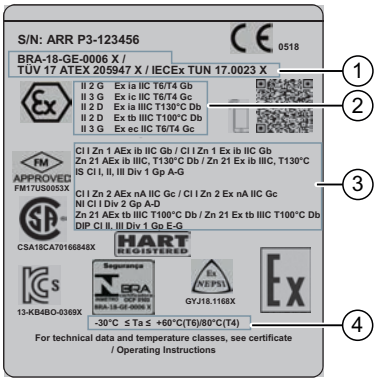

① Approvals

② ATEX/IECEx marking for hazardous area

③ FM/CSA marking for hazardous area

④ Permissible ambient temperature for operation in hazardous areas

1.6 Security information

Siemens provides products and solutions with industrial security functions that support the secure operation of plants, systems, machines and networks.

In order to protect plants, systems, machines and networks against cyber threats, it is necessary to implement – and continuously maintain – a holistic, state-of-the-art industrial security concept. Siemens' products and solutions constitute one element of such a concept.

Customers are responsible for preventing unauthorized access to their plants, systems, machines and networks. Such systems, machines and components should only be connected to an enterprise network or the internet if and to the extent such a connection is necessary and only when appropriate security measures (e.g. firewalls and/or network segmentation) are in place.

For additional information on industrial security measures that may be implemented, please visit
https://www.siemens.com/industrialsecurity.

Siemens' products and solutions undergo continuous development to make them more secure. Siemens strongly recommends that product updates are applied as soon as they are available and that the latest product versions are used. Use of product versions that are no longer supported, and failure to apply the latest updates may increase customer's exposure to cyber threats.

To stay informed about product updates, subscribe to the Siemens Industrial Security RSS Feed under
https://www.siemens.com/industrialsecurity.

1.7 Transportation and storage

To guarantee sufficient protection during transport and storage, observe the following:

- Keep the original packaging for subsequent transportation.
- Devices/replacement parts should be returned in their original packaging.
- If the original packaging is no longer available, ensure that all shipments are properly packaged to provide sufficient protection during transport. Siemens cannot assume liability for any costs associated with transportation damages.

NOTICE
Insufficient protection during storage The packaging only provides limited protection against moisture and infiltration. • Provide additional packaging as necessary.

Special conditions for storage and transportation of the device are listed in Technical data (Page 57).

1.8 Notes on warranty

The contents of this manual shall not become part of or modify any prior or existing agreement, commitment or legal relationship. The sales contract contains all obligations on the part of Siemens as well as the complete and solely applicable warranty conditions. Any statements regarding device versions described in the manual do not create new warranties or modify the existing warranty.

The content reflects the technical status at the time of publishing. Siemens reserves the right to make technical changes in the course of further development.

Safety instructions 2

2.1 Precondition for use

This device left the factory in good working condition. In order to maintain this status and to ensure safe operation of the device, observe these instructions and all the specifications relevant to safety.

Observe the information and symbols on the device. Do not remove any information or symbols from the device. Always keep the information and symbols in a completely legible state.

2.2 Warning symbols on the device

Symbol	Explanation
	Consult operating instructions

2.3 Laws and directives

Observe the safety rules, provisions and laws applicable in your country during connection, assembly and operation. These include, for example:

- National Electrical Code (NEC - NFPA 70) (USA)
- Canadian Electrical Code (CEC) (Canada)

Further provisions for hazardous area applications are for example:

- IEC 60079-14 (international)
- EN 60079-14 (EU)

2.4 Conformity with European directives

The CE marking on the device shows conformity with the regulations of the following European guidelines:

Electromagnetic compatibility EMC 2014/30/EU	Directive of the European Parliament and of the Council on the harmonization of the laws of the Member States relating to electromagnetic compatibility.
Atmosphère explosible ATEX 2014/34/EU	Directive of the European Parliament and of the Council on the harmonization of the laws of the Member States relating to equipment and protective systems intended for use in potentially explosive atmospheres.
2011/65/EU RoHS	Directive of the European Parliament and of the Council on the restriction of the use of certain hazardous substances in electrical and electronic equipment

The directives applied can be found in the EU declaration of conformity for the associated device.

2.5 Product approval and UL compliance

Classification according to pressure equipment directive (PED 2014/68/EU)	For fluid group 1 gases; fulfills requirements according to article 4, paragraph 3 (good engineering practice SEP)
CE conformity	The applicable directives and applied standards with their revision levels can be found in the EU declaration of conformity on the Internet.
UL conformity	You can find the appropriate "Standard(s) for Safety", including the relevant versions, in the UL-CERTIFICATE OF COMPLIANCE on the Internet.

2.6 Improper device modifications

WARNING

Improper device modifications

Risk to personnel, system and environment can result from modifications to the device, particularly in hazardous areas.

- Only carry out modifications that are described in the instructions for the device. Failure to observe this requirement cancels the manufacturer's warranty and the product approvals.

WARNING

Improper modification on positioner 6DR5...6

Danger of explosion. The pneumatic terminal plate on the SIPART PS2 positioner 6DR5..6 is a safety-related component of the flameproof enclosure.

- Never loosen the screws ① of the pneumatic terminal plate.

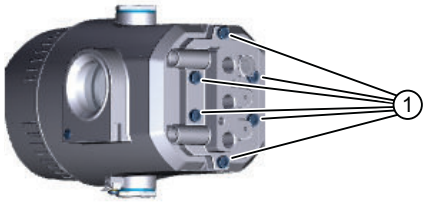

Figure 2-1 Screws of the pneumatic terminal plate on the positioner 6DR5..6

2.7 Use in areas subject to explosion hazard

Qualified personnel for hazardous area applications

Persons who install, connect, commission, operate, and service the device in a hazardous area must have the following specific qualifications:

- They are authorized, trained or instructed in operating and maintaining devices and systems according to the safety regulations for electrical circuits, high pressures, aggressive, and hazardous media.
- They are authorized, trained, or instructed in carrying out work on electrical circuits for hazardous systems.
- They are trained or instructed in maintenance and use of appropriate safety equipment according to the pertinent safety regulations.

WARNING

Use in hazardous area

Risk of explosion.

- Only use equipment that is approved for use in the intended hazardous area and labeled accordingly.
- Do not use devices that have been operated outside the conditions specified for hazardous areas. If you have used the device outside the conditions for hazardous areas, make all Ex markings unrecognizable on the nameplate.

See also

Technical data (Page 57)

WARNING

Loss of safety of device with type of protection "Intrinsic safety Ex i"

If the device or its components have already been operated in non-intrinsically safe circuits or the electrical specifications have not been observed, the safety of the device is no longer ensured for use in hazardous areas. There is a risk of explosion.

- Connect the device with type of protection "Intrinsic safety" solely to an intrinsically safe circuit.
- Observe the specifications for the electrical data on the certificate and/or in Technical data (Page 57).

Installing/mounting 3

3.1 Basic safety instructions

WARNING

High operating force with pneumatic actuators

Risk of injury when working on control valves due to the high operating force of the pneumatic actuator.

- Please observe the corresponding safety instructions for the pneumatic actuator in use.

WARNING

It is possible to damage the cover gasket

If the cover gasket is not positioned correctly in the groove of the base plate, it could be damaged when the cover is mounted and screwed tight.

- Therefore make sure that the gasket is seated correctly.

WARNING

Exceeded maximum permissible operating pressure

Risk of injury or poisoning.

The maximum permissible operating pressure depends on the device version, pressure limit and temperature rating. The device can be damaged if the operating pressure is exceeded. Hot, toxic and corrosive process media could be released.

Ensure that maximum permissible operating pressure of the device is not exceeded. Refer to the information on the nameplate and/or in Technical data (Page 57).

WARNING

Electrostatic charging of nameplates

The nameplates used on the device can reach a charging capacity of 5 pF.

- Keep the device and the cables at a distance from strong electromagnetic fields.

CAUTION

Unsuitable compressed air

Device damage. As a general rule, the positioner must only be operated with dry and clean compressed air.

- Use the customary water separators and filters. An additional dryer is required in extreme cases.
- Use dryers, especially if you operate the positioner at low ambient temperatures.

CAUTION

Note the following before working on the control valve and when attaching the positioner

Danger of injury.

- Prior to working on the control valve, you must move the control valve into a completely pressureless state. Proceed as follows:
  - Depressurize the actuator chambers.
  - Switch off the supply air PZ.
  - Lock the valve in its position.
- Make sure that the valve has reached the pressureless state.
- If you interrupt the pneumatic auxiliary power to the positioner, the pressureless position can only be reached after a certain waiting time.
- When mounting, observe the following sequence imperatively to avoid injuries or mechanical damage to the positioner/mounting kit:
  - Mount the positioner mechanically.
  - Connect the electrical auxiliary power supply.
  - Connect the pneumatic auxiliary power supply.
  - Commission the positioner.

WARNING

Mechanical impact energy

In order to ensure the degree of protection of the housing (IP66), protect the housing versions of the positioners listed here from mechanical impact energy:

- 6DR5..3; not greater than 2 Joule
- 6DR5..0; not greater than 1 Joule
- 6DR5..1 with inspection window; not greater than 1 Joule

NOTICE
Torque with NPT screwed gland Device damage. The maximum torque of the cable gland must not be exceeded. • To avoid damage to the device, the NPT adapter must be held in place while the NPT gland is screwed into the NPT adapter. Refer to the section "Technical specifications > Construction (Page 59)" for the torque value.

3.1.1 Proper mounting

NOTICE
Incorrect mounting The device can be damaged, destroyed, or its functionality impaired through improper mounting. • Before installing ensure there is no visible damage to the device. • Make sure that process connectors are clean, and suitable gaskets and glands are used. • Mount the device using suitable tools. Refer to the information in Construction (Page 59).

NOTICE
Freezing of the exhaust air outlets When devices of the type 6DR5..0/1/2/3 are used, the exhaust air outlets ② may freeze. The function of the device is impaired. • Do **not** install the positioner with the base plate ① pointing up.

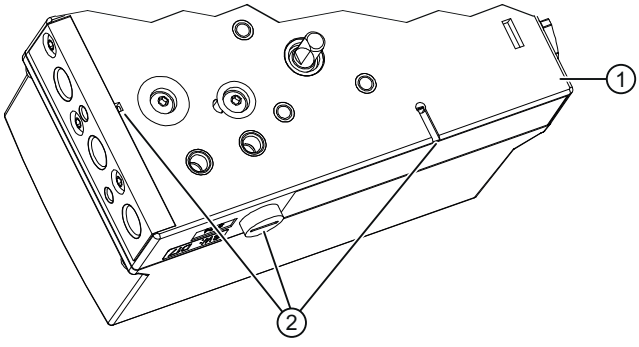

① Base plate
② Exhaust air outlets

Figure 3-1 Exhaust air outlets, base plate

3.2 Mounting to linear actuator

For linear actuators, use the "linear actuator" mounting kit 6DR4004-8V or the integrated attachment.

You require different installation parts depending on the selected actuator type. The mounting kit is suitable for a stroke of 3 to 35 mm. For a larger stroke range, you require a separately ordered lever 6DR4004-8L. Refer to the detailed operating instructions for further information on mounting.

3.3 Mounting to part-turn actuator

You require an actuator-specific VDI/VDE 3845 mount to install the positioner on a part-turn actuator. You receive the mount and screws from the actuator manufacturer. Ensure that the mount has a sheet metal thickness of > 4 mm and reinforcements. You also need the mounting kit 6DR4004-8D or the stainless steel coupling TGX: 16300-1556. Refer to the detailed operating instructions for further information on mounting.

3.4 Installing option modules

Depending on the version of the positioner, the following option modules are available:

- Digital I/O Module (DIO) 6DR4004-6A / -8A
- Analog Input Module (AIM) 6DR4004-6F / -8F
- Inductive Limit Switches (ILS) 6DR4004-6G / -8G
- Analog Output Module (AOM) 6DR4004-6J / -8J
- Mechanic Limit Switches (MLS) 6DR4004-6K / -8K
- Internal NCS module 6DR4004-5L / -5LE
- NCS sensor 6DR4004-6N / -8N

For additional information and the corresponding safety notes to be observed when installing the option modules, refer to the detailed operating instructions for your respective device version.

3.4.1 Internal NCS module

The internal NCS module is used for wear-free position detection and is an optional equipment version in the positioner. The internal NCS module is installed as an alternative to the Analog Output Module (AOM) at the same slot in the positioner.

Connecting 4

4.1 Basic safety instructions

WARNING

Lever for position detection

Danger of crushing and shearing with mounting kits which use a lever for position detection. During commissioning and ongoing operation, severing or squeezing of limbs could occur as a result of the lever. Risk of injury when working on control valves due to the high operating force of the pneumatic actuator.

- Do not reach into the range of motion of the lever following mounting of the positioner and mounting kit.

WARNING

With intrinsically device version (Ex i)

Risk of explosion in hazardous areas.

For intrinsically safe device versions only the certified circuits may be connected as auxiliary power supply, control and signal circuits.

- Make sure that the power source of the used circuits is marked as intrinsically safe.

WARNING

Unsuitable cables, cable glands and/or plugs

Risk of explosion in hazardous areas.

- Use only cable glands/plugs that comply with the requirements for the relevant type of protection.
- Tighten the cable glands in accordance with the torques specified in Technical data (Page 57).
- Close unused cable inlets for the electrical connections.
- When replacing cable glands, only use cable glands of the same type.
- After installation, check that the cables are seated firmly.

See also

Construction (Page 59)

NOTICE

Condensation in the device

Damage to device through formation of condensation if the temperature difference between transportation or storage and the mounting location exceeds 20 °C (36 °F).

- Before taking the device into operation, let the device adapt for several hours in the new environment.

NOTICE

Ambient temperature too high

Damage to cable sheath.

- At an ambient temperature ≥ 60 °C (140 °F), use heat-resistant cables suitable for an ambient temperature at least 20 °C (36 °F) higher.

WARNING

Improper power supply

Risk of explosion in hazardous areas as result of incorrect power supply.

- Connect the device in accordance with the specified power supply and signal circuits. The relevant specifications can be found in the certificates, in Technical data (Page 57) or on the nameplate.

WARNING

Lack of equipotential bonding

Risk of explosion through compensating currents or ignition currents through lack of equipotential bonding.

- Ensure that the device is potentially equalized.

Exception: It may be permissible to omit connection of the equipotential bonding for devices with type of protection "Intrinsic safety Ex i".

WARNING

Unprotected cable ends

Risk of explosion through unprotected cable ends in hazardous areas.

- Protect unused cable ends in accordance with IEC/EN 60079-14.

WARNING

Improper laying of shielded cables

Risk of explosion through compensating currents between hazardous area and the non-hazardous area.

- Shielded cables that cross into hazardous areas should be grounded only at one end.
- If grounding is required at both ends, use an equipotential bonding conductor.

WARNING

Connecting device in energized state

Risk of explosion in hazardous areas.

- Connect devices in hazardous areas only in a de-energized state.

Exceptions:

- Devices having the type of protection "Intrinsic safety Ex i" may also be connected in energized state in hazardous areas.
- Exceptions for type of protection "Increased safety ec" (Zone 2) are regulated in the relevant certificate.

WARNING

Incorrect selection of type of protection

Risk of explosion in areas subject to explosion hazard.

This device is approved for several types of protection.

1. Decide in favor of one type of protection.
2. Connect the device in accordance with the selected type of protection.
3. In order to avoid incorrect use at a later point, make the types of protection that are not used permanently unrecognizable on the nameplate.

NOTICE

Standard cable gland/torque

Device damage.

- Owing the reasons pertaining to tightness (IP enclosure rating) and the required tensile strength, only use the cables having a diameter ≥ 8 mm for standard M20x1.5 cable gland, or use a suitable seal insert in case of smaller diameters.
- In the NPT version, the positioner is delivered with a coupling. When inserting a counter piece in the coupling, ensure that the maximum permissible torque of 10 Nm is not exceeded.

CAUTION

Maximum AC/DC switching voltage with UL approval E344532

Mechanic Limit Switches (MLS) 6DR4004-**6K**/-**8K** are approved for use with positioners with UL approval. The maximum switching voltage in this case is ≤ 30 V AC/DC.

If switching voltages greater than 30 V are connected, the UL approval for the positioner becomes invalid.

Two-wire mode

NOTICE

Connection of voltage source to current input

Device damage if a voltage source is connected to the current input I_w (terminals 6 and 7).

- Never connect the current input I_w to a low-resistance voltage source, otherwise the positioner may be destroyed.
- Always use a high-impedance power source.
- Observe the static destruction limit specified in the "Electrical data (Page 66)".

See also

Electrical data (Page 68)

Note

Improvement of interference immunity

- Lay signal cables separate from cables with voltages > 60 V.
- Use cables with twisted wires.
- Keep device and cables at a distance from strong electromagnetic fields.
- Take account of the conditions for communication specified in the Technical data (Page 57).
- Use shielded cables to guarantee the full specification according to HART/PA/FF/Modbus/EIA-485/Profibus DP.

4.1.1 Additional safety notes for PA and FF

If the bus shield is fully effective, the interference immunity and the interference emission conform to the specifications. The following measures ensure that the bus shield is fully effective:

- The shields have been connected to the metallic connections of the positioner.
- The shields have been laid up to the terminal boxes, the distributor and the transceiver.

Note

Dissipation of glitch impulses/equipotential bonding

In order to dissipate glitch impulses, the positioner must be connected to an equipotential bonding cable (earth potential) using a low resistance. The positioner in the polycarbonate enclosure is therefore equipped with an additional cable. Connect the this cable to the shield of the bus cable and the equipotential bonding cable using a cable clamp.

Devices in the stainless steel or aluminum enclosure have a corresponding terminal on the outer side of the enclosure. This terminal must also be connected to the equipotential bonding cable.

For applications in hazardous areas, ensure an adequately suitable equipotential bonding between the hazardous and non-hazardous areas.

The positioner is equipped with an additional input (terminal 81 [+] and terminal 82 [-]) to approach the safety position. After activating this function, this input must be continuously supplied with +24 V in order to retain the normal control function.

If the 24-V signal is interrupted, the safety position is set as described in chapter "Pneumatic connection (Page 36)".

Communication with the master is still possible. The "Jumper" on the basic electronics is used to activate this function. It can be accessed after removing the module cover, and must be switched from the right position (delivery state) to the left position.

4.2 Electrical connection

4.2.1 SIPART PS2 with and without HART

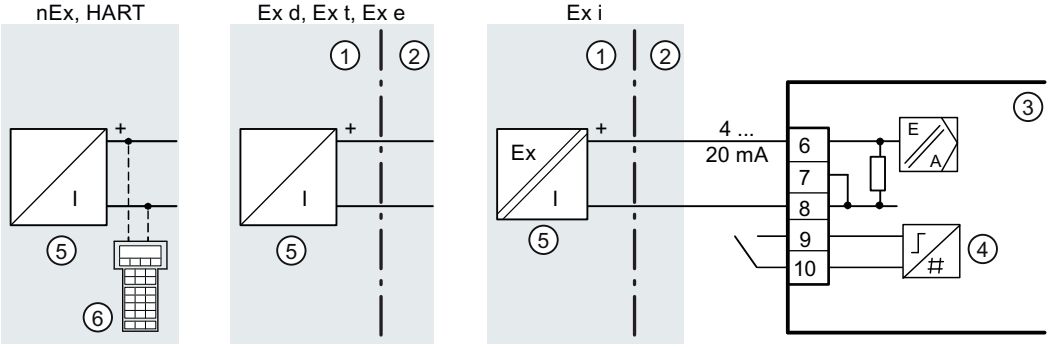

① Non-hazardous area
② Hazardous area
③ Basic electronics
④ Digital input DI1
⑤ Signal source
⑥ HART communicator

nEx = Non-explosion-proof device version

Figure 4-1 Device version 2-wire

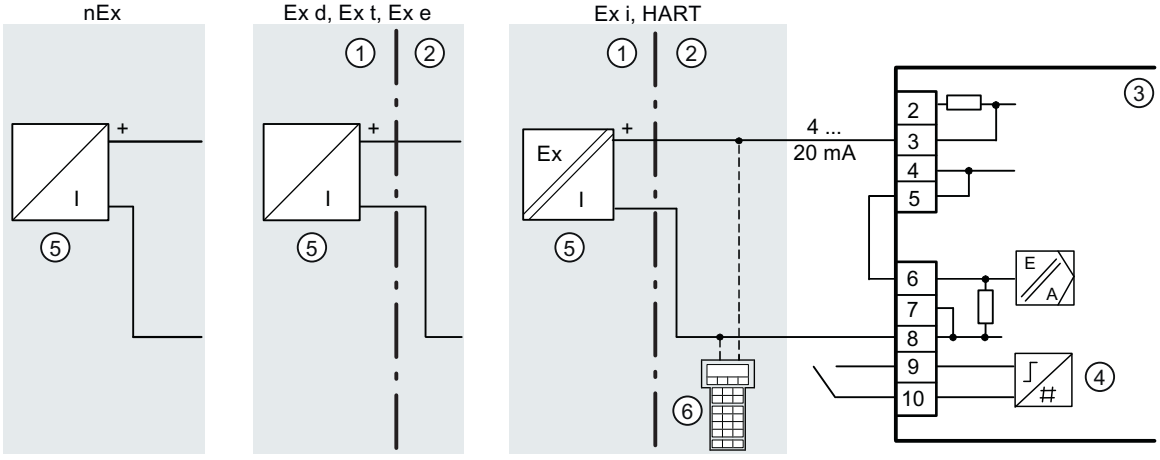

① Non-hazardous area
② Hazardous area
③ Basic electronics
④ Digital input DI1
⑤ Signal source
⑥ HART communicator

nEx = Non-explosion-proof device version

Figure 4-2 Device version 2-/3-/4-wire, with wiring configuration 2-wire

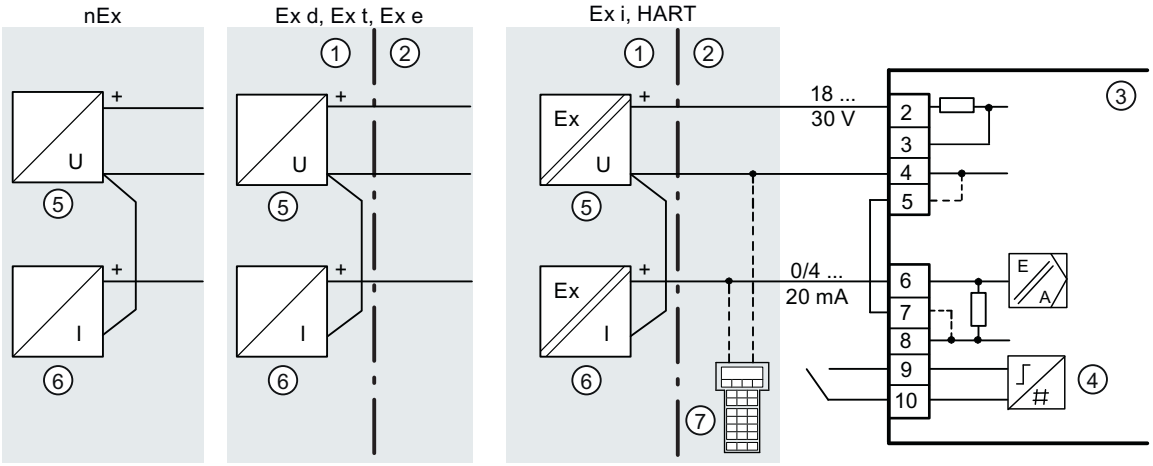

① Non-hazardous area
② Hazardous area
③ Basic electronics
④ Digital input DI1
⑤ Power source
⑥ Signal source
⑦ HART communicator
nEx = Non-explosion-proof device version

Figure 4-3 Device version 2-/3-/4-wire, with connection type 3-wire

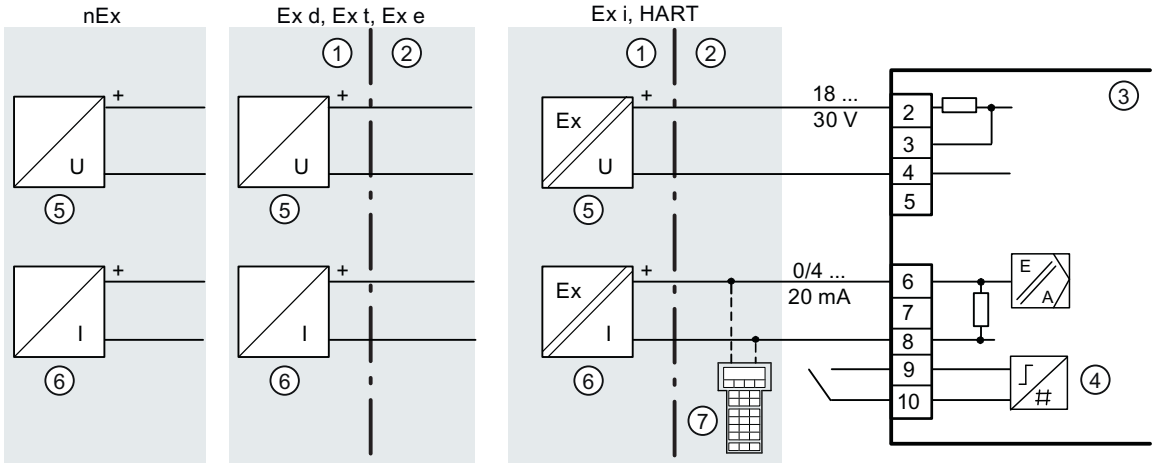

① Non-hazardous area
② Hazardous area
③ Basic electronics
④ Digital input DI1
⑤ Power source
⑥ Signal source
⑦ HART communicator
nEx = Non-explosion-proof device version

Figure 4-4 Device version 2-/3-/4-wire, with connection type 4-wire

See also

Electrical data (Page 66)
Technical data (Page 57)

4.2.2 SIPART PS2 with PROFIBUS PA

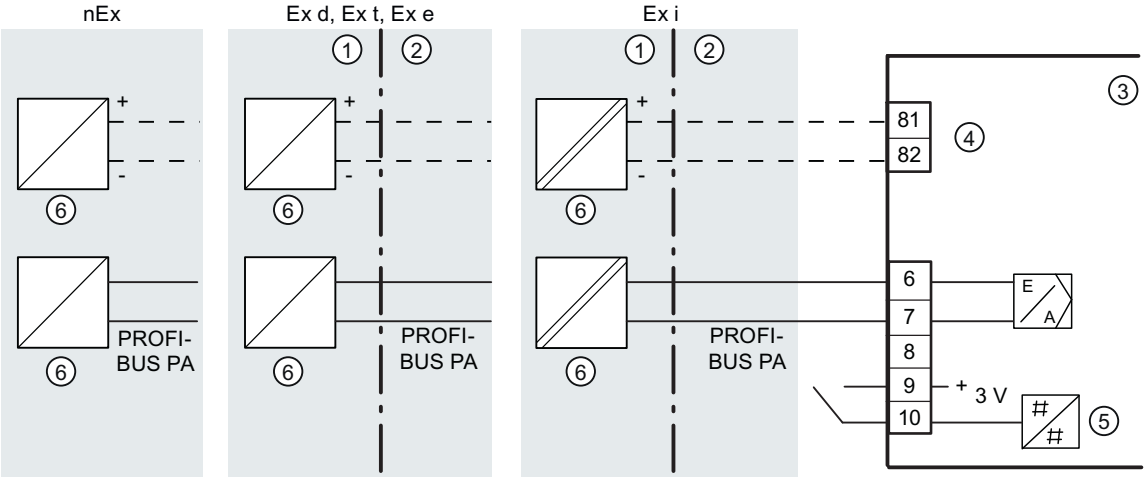

① Non-hazardous area
② Hazardous area
③ Basic electronics
④ Input: Safety shutdown
⑤ Digital input DI1
⑥ Signal source

nEx = Non-explosion-proof device version

Figure 4-5 Device version with PROFIBUS PA

See also

Electrical data (Page 68)
Technical data (Page 57)

4.2.3 SIPART PS2 with FOUNDATION Fieldbus

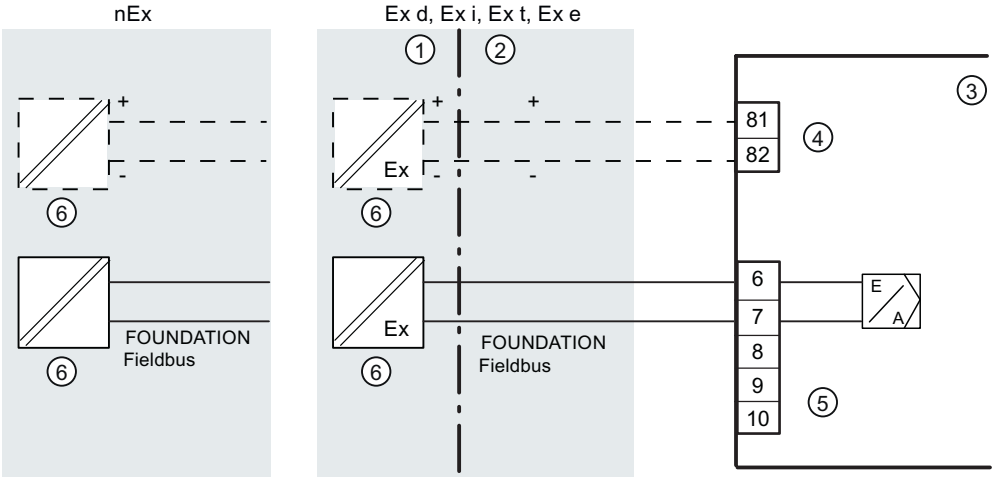

① Non-hazardous area
② Hazardous area
③ Basic electronics
④ Input: Safety shutdown
⑤ Simulation enable
⑥ Power source

nEx = Non-explosion-proof device version

Figure 4-6 Device version with FOUNDATION Fieldbus

See also

Electrical data (Page 68)

Technical data (Page 57)

4.2.4 Split range

For further information about "Split-range" operation, refer to the detailed operating instructions for your respective device version.

4.2.5 Option modules

4.2.5.1 Digital I/O Module (DIO) 6DR4004-6A / -8A

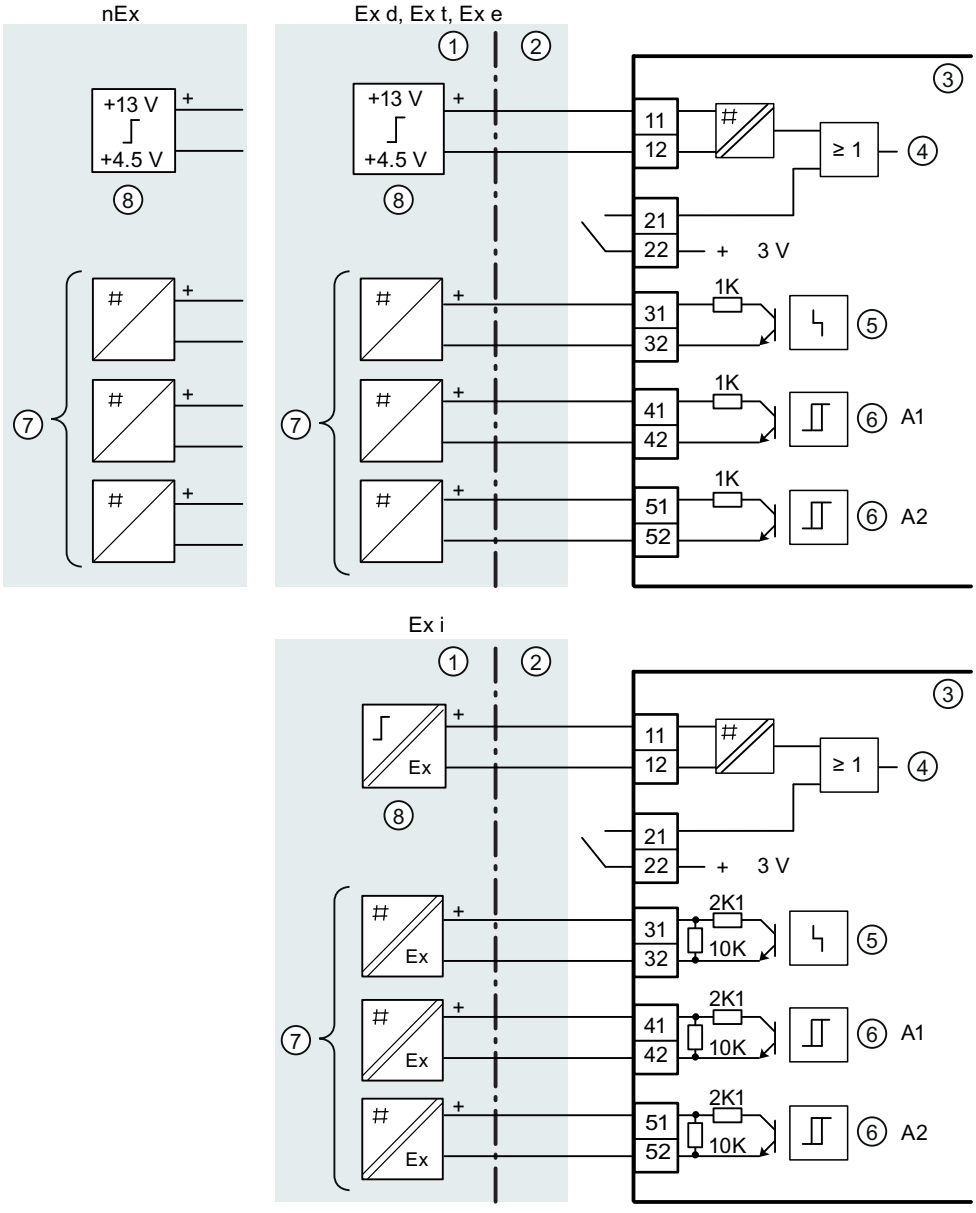

① Non-hazardous area
② Hazardous area
③ Digital I/O Module (DIO)
④ Digital input DI1
⑤ Fault message
⑥ Limit
⑦ Switching amplifier
⑧ Switching output

nEx = Non-explosion-proof device version

Figure 4-7 Digital I/O Module (DIO)

4.2.5.2 Analog Output Module (AOM) 6DR4004-6J / -8J

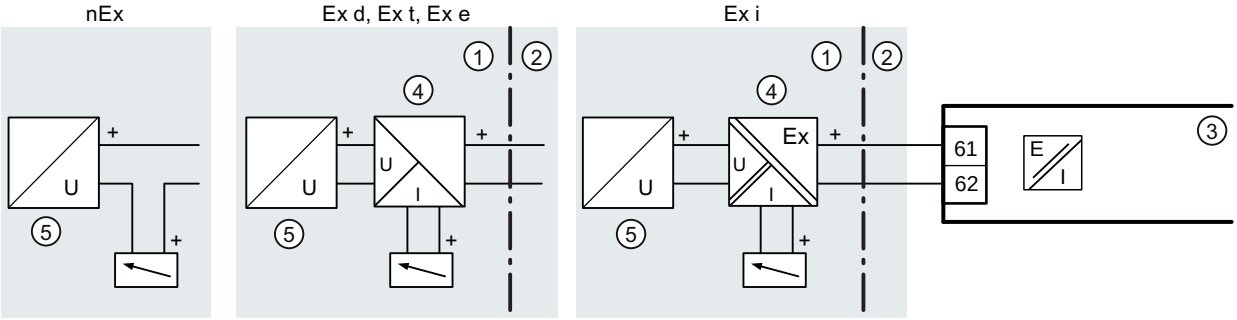

① Non-hazardous area
② Hazardous area
③ Analog Output Module (AOM)
④ Feed splitter
⑤ Power source
nEx = Non-explosion-proof device version

Figure 4-8 Analog Output Module (AOM)

4.2.5.3 Inductive Limit Switches (ILS) 6DR4004-6G / -8G

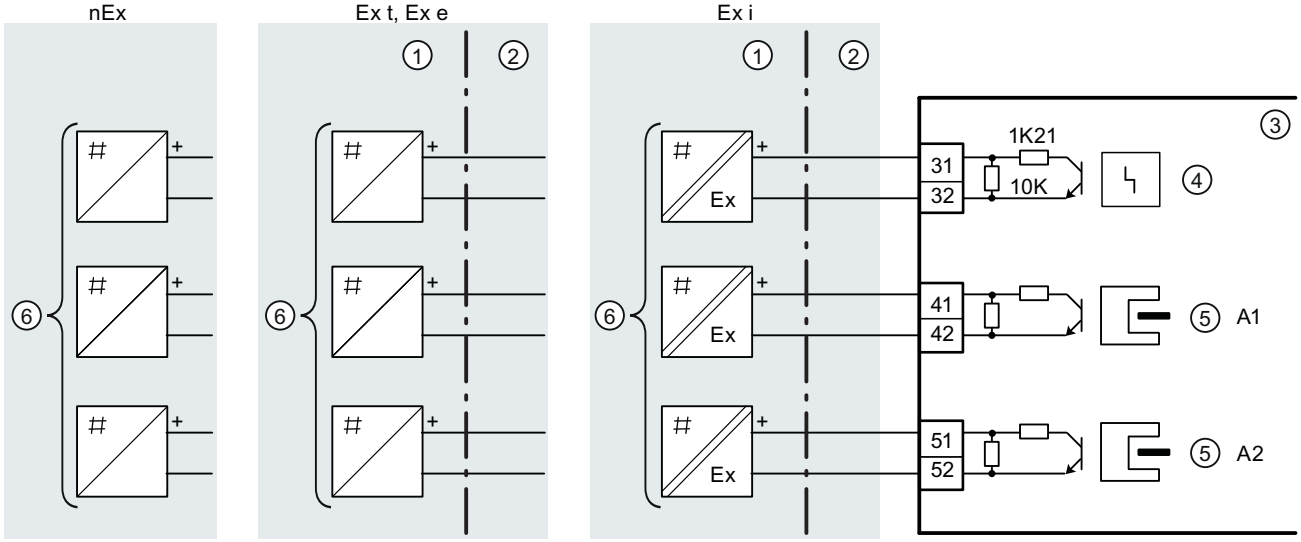

① Non-hazardous area
② Hazardous area
③ Inductive Limit Switches (ILS)
④ Fault message
⑤ Limit
⑥ Switching amplifier
nEx = Non-explosion-proof device version

Figure 4-9 Inductive Limit Switches (ILS)

See also

Inductive Limit Switches (ILS) 6DR4004-6G / -8G (Page 73)

4.2.5.4 Mechanic Limit Switches (MLS) 6DR4004-6K / -8K

DANGER

Supply with hazardous voltage

If you connect the switching contacts of the 6DR4004-8K module to a hazardous voltage, observe the following safety rules:

1. Isolate the device from power. Use a circuit breaker positioned near the device to do this.
2. Make sure that the device cannot be switched back on inadvertently.
3. Make sure the device is truly isolated from power.

CAUTION

Maximum AC/DC switching voltage with UL approval E344532

Mechanic Limit Switches (MLS) 6DR4004-**6K**/-**8K** are approved for use with positioners with UL approval. The maximum switching voltage in this case is ≤ 30 V AC/DC.

If switching voltages greater than 30 V are connected, the UL approval for the positioner becomes invalid.

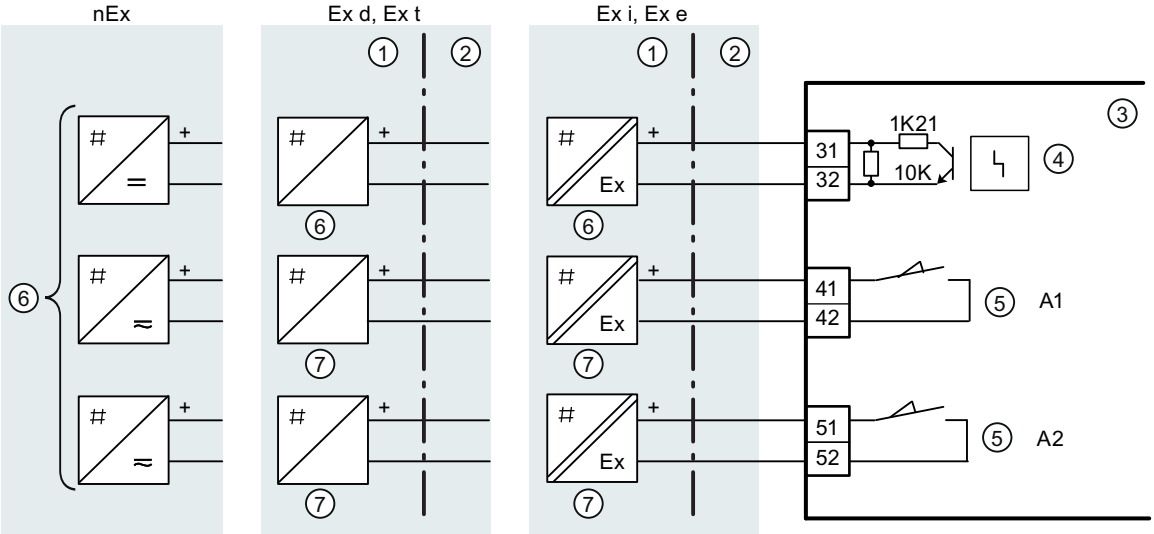

① Non-hazardous area
② Hazardous area
③ Mechanic Limit Switches (MLS)
④ Fault message
⑤ Limit
⑥ Switching amplifier
⑦ Switching output
nEx = Non-explosion-proof device version

Figure 4-10 Mechanic Limit Switches (MLS)

See also

Mechanic Limit Switches (MLS) 6DR4004-6K / -8K (Page 74)

Procedure

1. Loosen the screw ① on the transparent cover ②.
2. Pull the transparent cover ② up to the front end stop.
3. Tighten every cable in the corresponding terminal.
4. Slide the transparent cover ② up to the end stop of the basic electronics.
5. Tighten the screw ① of the transparent cover ②.
6. Connect the cables of each switch to the lug of the printed circuit board in pairs. Use the provided cable ties ③ for this purpose.

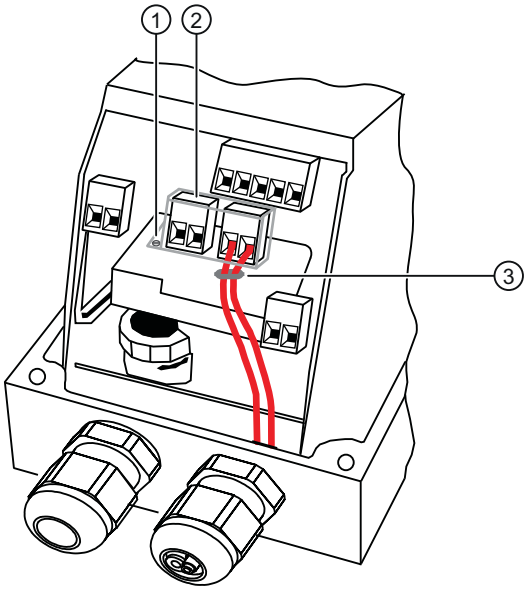

① Screw
② Cover
③ Cable tie

Figure 4-11 Connecting the cables

4.2.6 Option device version M12 connector

This section describes which terminal of the devices and option modules listed below is connected with the respective pole of the M12 connector.

Note

Technical specifications

Observe the specifications for the electrical data in the certificate and/or in section "Technical data (Page 57)".

View of the mating side pole pattern

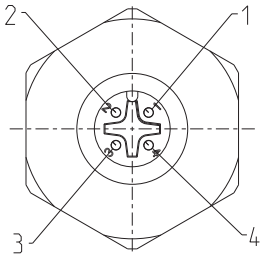

Pole designation	Wire color of M12 connector
1	Brown
4	Black
3	Blue
2	White

4.2.6.1 M12 connector in basic device with and without HART

You have a positioner 6DR50/1..-0.**R**.. or 6DR50/1..-0.**S**. In this version of the positioner, the current input I_W 4 to 20 mA of the basic electronics is connected via the M12 connector.

Table 4-1 Assignment diagram

Current input terminal	Pole designation
6 (+)	1 - Brown
Shield support of enclosure	4 - Black
7 and 8 (-)	3 - Blue

4.2.6.2 M12 connector in basic device with PROFIBUS PA

You have a positioner 6DR55..-0.**R**.. or 6DR55..-0.**S**. In this case the M12 connector is connected to the bus circuit of the basic electronics.

Table 4-2 Assignment diagram

Bus circuit terminal	Pole designation
7	1 - Brown
Shield support of enclosure	4 - Black
6	3 - Blue

4.2.6.3 M12 connector in basic device with FOUNDATION Fieldbus

You have a positioner 6DR56..-0.**R**.. or 6DR56..-0.**S**.. In this case the M12 connector is connected to the bus circuit of the basic electronics.

Table 4-3 Assignment diagram

Bus circuit terminal	Pole designation
7	1 - Brown
Shield support of enclosure	4 - Black
6	3 - Blue

4.2.6.4 M12 Connector in Basic Device with Analog Output Module (AOM) 6DR4004-6J / -8J (-Z D53)

You have a positioner with order suffix -Z order code D53. In this version of the positioner, the current output of Analog Output Module (AOM) is electrically connected to the M12 connector.

Table 4-4 Assignment diagram

Current output terminal	Pole designation
61 (+)	1 - Brown
Shield support of enclosure	4 - Black
62 (-)	3 - Blue

4.2.6.5 M12 connector in basic device with External Position Transmitter 6DR4004-1ES/-2ES (-Z D54)

You have a positioner with order suffix -Z order code D54. In this version of the positioner, the installed Analog Input Module (AIM) 6DR4004-6F/-8F is electrically connected to the M12 connector. You connect the External Position Transmitter 6DR4004-1ES/-2ES using the M12 connector.

Table 4-5 Assignment diagram

Terminal	Pole designation
POS (X1/2)	3 - Blue
VCC (X1/4)	1 - Brown
GND (X1/1)	4 - Black
VREF (X1/3)	2 - White

4.2.6.6 M12 Connector in Basic Device with Digital I/O Module (DIO) 6DR4004-6A / -8A (-Z D55)

You have a positioner with order suffix -Z order code D55. In this version of the positioner, the current output of Digital I/O Module (DIO) is electrically connected to the M12 connector.

Table 4-6 Assignment diagram

Alarm output terminal	Pole designation
41 (+)	1 - Brown
52 (-)	4 - Black
42 (-)	3 - Blue
51 (+)	2 - White

4.2.6.7 M12 Connector in Basic Device with Inductive Limit Switches (ILS) 6DR4004-6G /-8G (-Z D56)

You have a positioner with order suffix -Z order code D56. In this version of the positioner, the outputs of Inductive Limit Switches (ILS) are electrically connected to the M12 connector.

Table 4-7 Assignment diagram

Alarm output terminal	Pole designation
41 (+)	1 - Brown
52 (-)	4 - Black
42 (-)	3 - Blue
51 (+)	2 - White

4.2.6.8 M12 Connector in Basic Device with Mechanic Limit Switches (MLS) 6DR4004-6K (-Z D57)

You have a positioner with order suffix -Z order code D57. In this version of the positioner, the outputs of Mechanic Limit Switches (MLS) are electrically connected to the M12 connector.

Table 4-8 Assignment diagram

Alarm output terminal	Pole designation
41 (+)	1 - Brown
52 (-)	4 - Black
42 (-)	3 - Blue
51 (+)	2 - White

4.3 Pneumatic connection

WARNING

Pneumatic auxiliary power

For safety reasons, the pneumatic auxiliary power supply can be fed after installation only if the positioner is switched to "P-Manual mode" when an electrical signal is present. This operating mode is preset in the delivery state.

Note

Specifications regarding air quality

Observe the specifications regarding the air quality, see section "Technical specifications > Pneumatic data (Page 58)".

Note

Leakage

Besides continuous air consumption, a leakage can cause the positioner to try to compensate the position deviation. This will result in premature wear in the entire control device.

- Check offline using the diagnostic parameter "11.LEAK" whether leakage is present.
- If there is leakage, check the pneumatic connections for leaks.

4.3.1 Pneumatic connection for 6DR5..0/1/2/3

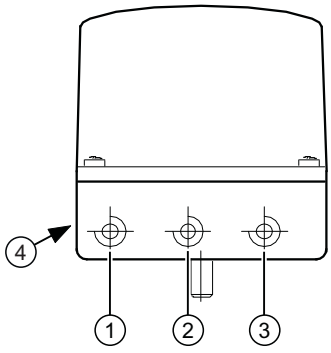

① Output: Actuating pressure Y2 *)

② Input: Supply air PZ

③ Output: Actuating pressure Y1

④ Exhaust air outlet with sound absorber, thread G¼

*) for double-acting actuators

Figure 4-12 Pneumatic connection, example

4.3.2 Pneumatic connection for 6DR5..5 and 6DR5..6

Structure

The pneumatic connections are provided on the right side of the positioner.

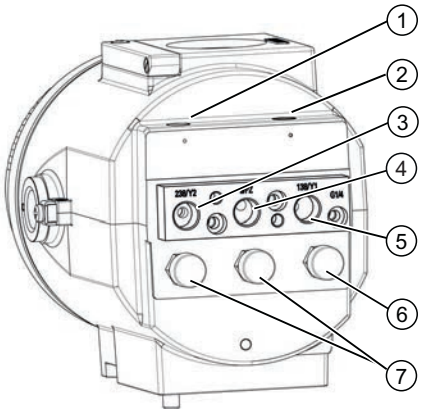

① Restrictor Y2 *)
② Restrictor Y1
③ Output: Actuating pressure Y2 *)
④ Input: Supply air PZ
⑤ Output: Actuating pressure Y1
⑦ Enclosure ventilation (2x)
⑥ Exhaust air outlet

*) for double-acting actuators

Figure 4-13 Pneumatic connection in the flameproof enclosure

4.4 Restrictors

- Reduce the air output to achieve travel times of T > 1.5 s for small actuators. Use restrictors Y1 ① and Y2 ② for this purpose.
- When turned clockwise, they reduce the air output and finally shut it off.

- In order to set the restrictors, we recommend closing them and then opening slowly.
- In case of double-acting valves, ensure that both restrictors have approximately the same setting.

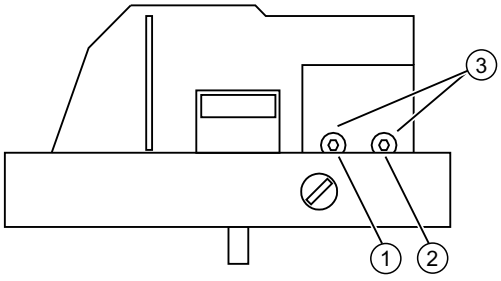

① Restrictor Y1

② Restrictor Y2, only in the version for double-acting actuators *)

③ Hexagon socket-head screw 2.5 mm

Figure 4-14 Restrictors

*) Restrictor Y2 ② is not active for single-acting Fail in Place F01

Commissioning 5

5.1 Basic safety instructions

WARNING

Lever for position detection

Danger of crushing and shearing with mounting kits which use a lever for position detection. During commissioning and ongoing operation, severing or squeezing of limbs could occur as a result of the lever. Risk of injury when working on control valves due to the high operating force of the pneumatic actuator.

- Do not reach into the range of motion of the lever following mounting of the positioner and mounting kit.

WARNING

Improper commissioning in hazardous areas

Device failure or risk of explosion in hazardous areas.

- Do not commission the device until it has been mounted completely and connected in accordance with the information in Technical data (Page 57).
- Before commissioning take the effect on other devices in the system into account.

WARNING

Loss of explosion protection

Risk of explosion in hazardous areas if the device is open or not properly closed.

- Close the device as described in Installing/mounting (Page 17).

WARNING

Opening device in energized state

Risk of explosion in hazardous areas

- Only open the device in a de-energized state.
- Check prior to commissioning that the cover, cover locks, and cable inlets are assembled in accordance with the directives.

Exception: Devices having the type of protection "Intrinsic safety Ex i" may also be opened in energized state in hazardous areas.

WARNING

Water in compressed air line

Device damage and possibly loss of type of protection. The factory setting for the purging air selector is "IN". In the "IN" position, water from the compressed air line may enter the device from the pneumatics during initial commissioning.

- Before commissioning, make sure that no water is present in the compressed air line.

If you cannot be sure that there is no water in the compressed air line:

- Set the purging air selector to "OUT". In this way, you prevent water from the compressed air line from penetrating the device.
- Only set the purging air selector to "IN" again when all water has been discharged from the compressed air line.

CAUTION

Loss of type of protection

Damage to device if the enclosure is open or not properly closed. The type of protection specified on the nameplate or in Technical data (Page 57) is no longer guaranteed.

- Make sure that the device is securely closed.

WARNING

Commissioning and operation with pending error

If an error message appears, correct operation in the process is no longer guaranteed.

- Check the gravity of the error.
- Correct the error.
- If the error still exists:
  - Take the device out of operation.
  - Prevent renewed commissioning.

CAUTION

Increased sound pressure level

Changes to the sound absorber of the positioner or the mounting of pneumatic components or pneumatic options on the positioner can cause a sound pressure with a level of 80 dBA to be exceeded.

- Wear suitable hearing protection to protect yourself against hearing damage.

When operating the positioner with natural gas, you must follow and adhere to the following safety notes:

WARNING

Operation with natural gas

1. Only positioners and option modules which are connected to power supplies with type of protection "Intrinsic safety, protection level [ia]" may be operated with natural gas.
2. Do not operate the positioner with natural gas in closed spaces.
3. Natural gas is continuously blown off, depending on the model. Special care must therefore be taken during maintenance activities near the positioner. Always ensure that the immediate surroundings of the positioner are adequately ventilated.
   The maximum values for ventilation are listed in section "Natural gas as actuator medium (Page 65)".
4. If you operate the positioner with natural gas, it is not permitted to use Mechanic Limit Switches (MLS).
5. Depressurize the devices operated with natural gas adequately during maintenance activities. Open the cover in an explosion-free atmosphere and depressurize the device for at least two minutes.

Note

Quality of natural gas

Only use natural gas which is clean, dry and free from additives.

5.2 Overview

Note

- During the initialization process, the operating pressure must be at least one bar more than that required to close or open the valve. However, the operating pressure should not be greater than the maximum permissible operating pressure for the actuator.

General information about commissioning

1. After installing the positioner on a pneumatic actuator, you must supply electric and pneumatic auxiliary power to it.
2. The positioner is in the "P manual mode" before initialization. At the same time, "NOINI" blinks in the lower line of the display.
3. Position feedback: You can adjust the range of position detection using the friction clutch if necessary.
4. Adjust the positioner as per the respective actuator with the help of the initialization process and by setting the parameters. If required, use the "PRST" parameter to cancel the adjustment of the positioner on the actuator. The positioner is again in the "P manual mode" after this process.

Types of initialization

You can initialize the positioner as follows:

- Automatic initialization:
  during automatic initialization, the positioner determines the following one after the other:
  - The direction of action
  - The actuator travel and angle of rotation
  - The travel time of the actuator

The positioner also adjusts the control parameters as per the dynamic response of the actuator.

- Manual initialization:
  the actuator travel and the angle of rotation of the actuator are set manually. The remaining parameters are automatically determined. This function is useful for valves which are lined, for example, with PTFE.
- Copying the initialization data when replacing a positioner:
  the initialization data of a positioner can be read and copied into another positioner. A defective device can thus be replaced without interrupting an ongoing process through initialization.

You have to define a few parameters for the positioner before initialization. Owing to the preset values, you cannot adjust further parameters for initialization.

You can use a suitably configured and activated digital input to protect the configured settings against accidental adjustment.

5.3 Sequence of automatic initialization

See detailed operating instructions for information on sequence of automatic initialization.

5.4 Parameter

Introduction

Parameters 1 to 5 are the same for all versions of the positioner. These parameters are used to adjust the positioner to the actuator. Normally, setting these parameters is sufficient to be able to operate the positioner on an actuator.

If you want to get to know all details of the positioner, gradually try out the effects of the remaining parameters by systematic testing.

Note

Factory-set parameter values are printed in bold in the following table.

Overview

Parameter	Function	Parameter values		Unit
1.YFCT	Type of actuator	Normal	Inverted	
	Part-turn actuator	turn	-turn	
	Linear actuator	**WAY**	-WAY	
	Linear actuator - carrier pin on actuator spindle	FWAY	-FWAY	
	Linear actuator - external linear potentiometer (e.g. with cylinder drives)	LWAY	-LWAY	
	Part-turn actuator with NCS/iNCS	ncSt	-ncSt	
	Linear actuator with NCS	ncSL	-ncSL	
	Linear actuator with NCS/iNCS and lever	ncSLL	-ncLL	
2.YAGL	Rated angle of rotation of positioner shaft [1]			
		33°		Degrees
		90°		
3.YWAY[2]	Range of stroke (optional setting) [3]			
		OFF		mm
		5 | 10 | 15 | 20 (Short lever 33°, range of stroke 5 mm to 20 mm)		
		25 | 30 | 35 (Short lever 90°, range of stroke 25 mm to 35 mm)		
		40 | 50 | 60 | 70 | 90 | 110 | 130 (Long lever 90°, range of stroke 40 mm to 130 mm)		
4.INITA	Initialization (automatic)	**NOINI** | no / ###.# | Strt		
5.INITM	Initialization (manual)	**NOINI** | no / ###.# | Strt		

[1]	Set the transmission ratio selector accordingly.
[2]	Parameter only appears with "WAY", "-WAY", "ncSLL", and "-ncLL"
[3]	If used, the value on the actuator must correspond to the set range of stroke on the lever arm. Carrier must be set to the value of the actuator travel or, if this value is not scaled, to the next larger scale value.

5.5 Purge air switching

When the enclosure is open, the purge air switch above the pneumatic terminal strip on the pneumatic block can be accessed.

- In the IN position, the enclosure is flushed from inside with a small volume of clean and dry instrument air.
- In the OUT position, the purge air is directly directed towards outside.

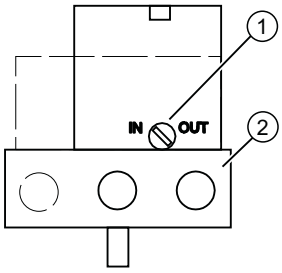

① Purging air selector

② Pneumatic connections Y1, PZ and Y2

Figure 5-1 Purge air switch on the pneumatic block; view of the positioner on the pneumatic connection side when the cover is open

The factory setting is the "IN" position.

5.6 Commissioning linear actuators

5.6.1 Preparing linear actuators for commissioning

Requirement

You have already installed the positioner using the suitable mounting kit.

Setting the transmission ratio selector

Commissioning

The setting of the transmission ratio selector is extremely important to commission the positioner.

Stroke [mm]	Position of the transmission ratio selector
5 ... 20	33°
25 ... 35	90°
40 ... 130	90°

Connecting the positioner

1. Connect a suitable current or voltage source. The positioner is now in the "P manual mode". The current potentiometer voltage (P) in percent is shown in the upper line of the display, e.g. "P37.5", and "NOINI" flashes in the bottom line:

2. Connect the actuator and the positioner to the pneumatic lines.
3. Supply the pneumatic auxiliary power to the positioner.

Setting the actuator

1. Check whether the mechanical unit can be moved freely in the entire travel range. Move the actuator to the respective end position for this purpose using the ⊼ or ⊽ button.
2. Now move the actuator to the horizontal position of the lever.
3. A value between "P48.0" and "P52.0" is shown on the display.
4. If a value beyond this range is shown on the display, you must move the friction clutch. Move the friction clutch until a value between "P48.0" and "P52.0" is reached. The closer this value is to "P50.0", the more accurately the positioner determines the stroke travel.
   The following applies to the flameproof enclosure version:
   The inner friction clutch is fixed. Therefore, only move the outer friction clutch. This also applies when using an internal NCS module.
   The following applies to device versions without flameproof enclosure with internal NCS module 6DR4004-5L.:
   The inner friction clutch has no function. This means you should only adjust the adjustment wheel of the magnet clamp. Requirement: 'YFCT (Page 44)' parameter is set.

5.6.2 Automatic initialization of linear actuators

Conditions

The following conditions must be fulfilled before activating the automatic initialization:

1. The actuator spindle can be moved completely.
2. The actuator spindle is at a central position after moving.

Initializing the linear actuator automatically

Note

Interrupting initialization

An ongoing initialization can be interrupted at any time. To do this, press ⏎. The settings configured until then are retained.

All parameters are reset to factory settings only if you have explicitly activated the preset settings in the "PRST" parameter.

1. Switch to the "Configuration" mode. To do this, keep the ⏎ button pressed for at least 5 seconds. The display shows the following:

2. Call the "2.YAGL" parameter. To do this, press ⏎. The following is shown on the display depending on the setting:

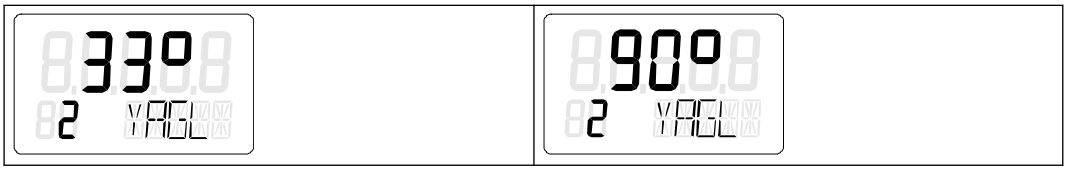

3. Check whether the value displayed in the "2.YAGL" parameter matches the setting of the transmission ratio selector. If required, change the setting of the transmission ratio selector to 33° or 90°.
4. Set the "3.YWAY" parameter to determine the total stroke in mm. The setting of parameter 3 is optional. The display shows the determined total stroke only at the end of the initialization phase.
   – Press the ⏎ button if you do not require any information about the total stroke in mm. You are then directed to parameter 4.
   – Call the "3.YWAY" parameter. To do this, press ⏎. The display shows the following:

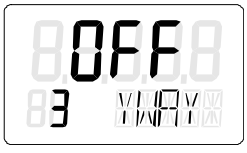

Note

Set the "3.YWAY" parameter

Proceed as follows to set parameter 3:

1. On the scale of the lever, read the value marked by the carrier pin.
2. Set the parameter with the buttons △ and ▽ to the read value.

5. Call the "4.INITA" parameter. To do this, briefly press the button. The display shows the following:

6. Start the initialization process. To do this, keep the button pressed for at least 5 seconds until the display shows the following:

The positioner runs through five initialization steps during the automatic initialization process. Displays for the initialization steps from "RUN 1" to "RUN 5" are shown in the lower line on the display. The initialization process depends on the actuator used, and takes up to 15 minutes.

7. The following display indicates that the automatic initialization is complete:

5.6.3 Manual initialization of linear actuators

See detailed operating instructions for information on manual initialization of linear actuators.

5.7 Commissioning part-turn actuators

5.7.1 Preparing part-turn actuators for commissioning

Note

Setting of the adjustment angle

The usual adjustment angle for part-turn actuators is 90°.

- Set the transmission ratio selector in the positioner to 90°.

Condition

The following conditions must be fulfilled before activating the initialization:

1. You have installed the positioner for the part-turn actuators using the suitable mounting kit.
2. You have connected the actuator and the positioner to the pneumatic lines.
3. Pneumatic auxiliary power is supplied to the positioner.
4. The positioner has been connected to a suitable power supply.

Setting the actuator

1. The positioner is in the "P manual mode". The current potentiometer voltage P in percent is shown on the upper line in the display. "NOINI" blinks in the lower line of the display. Examples of corresponding displays are given below:

2. Check whether the mechanical unit can be moved freely in the entire travel range. Move the drive to the respective end position for this purpose using the ⊕ or ⊖ button.

   Note
   End position
   By simultaneously pressing the ⊕ and ⊖ buttons, you reach the end position faster.

3. After checking, move the actuator to a central position. This accelerates the initialization process.

5.7.2 Automatic initialization of part-turn actuators

Condition

The following conditions must be fulfilled before activating the automatic initialization:

1. The travel range of the actuator can be passed through completely.
2. The actuator shaft is at a central position.

Initializing the part-turn actuator automatically

Note

Interrupting initialization

An ongoing initialization can be interrupted at any time. To do this, press ⌂. The settings configured until then are retained.

All parameters are reset to factory settings only if you have explicitly activated the preset settings in the "PRST" parameter.

1. Switch to the "Configuration" mode. To do this, press the ⌂ button for at least 5 seconds until the display shows the following:

2. Use the ▽ button to change from linear actuator to part-turn actuator until the display shows the following:

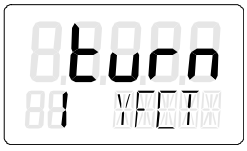

3. Call the "2.YAGL" parameter. To do this, briefly press the ⌂ button. This parameter has already been set to 90° automatically. The display shows the following:

4. Call the "4.INITA" parameter. To do this, briefly press the ⌂ button. The display shows the following:

5. Start the initialization process. To do this, press the button for at least 5 seconds until the display shows the following:

The positioner runs through five initialization steps during the automatic initialization process. Displays for the initialization steps from "RUN 1" to "RUN 5" are shown in the lower line on the display. The initialization process depends on the actuator used, and takes up to 15 minutes.

6. The following display indicates that the automatic initialization is complete. The total angle of rotation of the actuator is shown on the upper line on the display:

5.7.3 Manual initialization of part-turn actuators

See detailed operating instructions for information on manual initialization of part-turn actuators.

5.8 Canceling initialization

1. Press the button.
   - Canceling automatic initialization: the display shows "INITA".
   - Canceling manual initialization: the display shows "INITM".

   The positioner is in the "Configuration" mode.
2. Exit the "Configuration" mode. To do this, press the button for at least 5 seconds.
   The software version is displayed.
   After releasing the button, the positioner is in "P manual mode". The positioner is not initialized.

Service and maintenance

6

6.1 Basic safety instructions

WARNING

Impermissible repair of the device

- Repair must be carried out by Siemens authorized personnel only.

WARNING

Dust layers above 5 mm

Risk of explosion in hazardous areas.

Device may overheat due to dust build up.

- Remove dust layers in excess of 5 mm.

NOTICE

Penetration of moisture into the device

Device damage.

- Make sure when carrying out cleaning and maintenance work that no moisture penetrates the inside of the device.

CAUTION

Releasing button lock

Improper modification of parameters could influence process safety.

- Make sure that only authorized personnel may cancel the button locking of devices for safety-related applications.

Cleaning the enclosure

- Clean the outside of the enclosure with the inscriptions and the display window using a cloth moistened with water or a mild detergent.
- Do not use any aggressive cleansing agents or solvents, e.g. acetone. Plastic parts or the painted surface could be damaged. The inscriptions could become unreadable.

WARNING

Electrostatic charge

Risk of explosion in hazardous areas if electrostatic charges develop, for example, when cleaning plastic surfaces with a dry cloth.

- Prevent electrostatic charging in hazardous areas.

6.2 Cleaning of the screens

The positioner is maintenance-free to a large extent. Screens are installed in the pneumatic connections of the positioners to protect them from rough dirt particles. If there are dirt particles in the pneumatic auxiliary power supply, they damage the screens and hamper the function of the positioner. Clean the screens as described in the following two chapters.

6.2.1 Positioners 6DR5..0, 6DR5..3 and 6DR5..5

Procedure for removal and cleaning of the screens

1. Disconnect the pneumatic auxiliary power supply.
2. Remove the pneumatic pipelines.
3. Unscrew the cover of the 6DR5..0 or 6DR5..3 enclosure.
4. Unscrew the three screws on the pneumatic terminal strip.
5. Remove the screens and O-rings behind the terminal strip.
6. Clean the screens, e.g. using compressed air.

Procedure for installation of the screens

CAUTION

Damage to the polycarbonate enclosure 6DR5..0

- The enclosure is damaged due to screwing in the self-tapping screws improperly.
- Ensure that the available thread pitches are used.
- Turn the screws anticlockwise until they engage noticeably in the thread pitch.
- Tighten the self-tapping screws only after they have engaged.

1. Insert the screens into the recesses of the enclosure.
2. Place the O-rings on the screens.
3. Insert the pneumatic terminal strip.

4. Tighten the three screws. Note: With the polycarbonate enclosure, the screws are self-tapping.
5. Place the cover and tighten it.
6. Connect the pneumatic pipelines again.

6.2.2 Positioners 6DR5..1, 6DR5..2 and 6DR5..6

Removal, cleaning and installation of the screens

1. Disconnect the pneumatic auxiliary power supply.
2. Remove the pneumatic connecting cables.
3. Remove the metal screen from the bores carefully.
4. Clean the metal screens, e.g. using compressed air.
5. Insert the screens.
6. Connect the pneumatic pipelines again.

6.3 Maintenance and repair work

WARNING

Maintenance during continued operation in a hazardous area

There is a risk of explosion when carrying out repairs and maintenance on the device in a hazardous area.

- Isolate the device from power.

- or -

- Ensure that the atmosphere is explosion-free (hot work permit).

WARNING

Impermissible accessories and spare parts

Risk of explosion in areas subject to explosion hazard.

- Only use original accessories or original spare parts.
- Observe all relevant installation and safety instructions described in the instructions for the device or enclosed with the accessory or spare part.

WARNING

Improper connection after maintenance

Risk of explosion in areas subject to explosion hazard.

- Connect the device correctly after maintenance.
- Close the device after maintenance work.

Refer to Electrical connection (Page 26).

6.3.1 Repair/Upgrading

Send defective devices to the repairs department, together with information on the malfunction and the cause of the malfunction. When ordering replacement devices, please provide the serial number of the original device. You can find the serial number on the nameplate.

6.4 Return procedure

Enclose the bill of lading, return document and decontamination certificate in a clear plastic pouch and attach it firmly to the outside of the packaging. Any devices/replacement parts which are returned without a decontamination declaration will be cleaned at your expense before further processing. For further details, refer to the operating instructions.

See also

Return document (http://www.siemens.com/processinstrumentation/returngoodsnote)

Decontamination declaration (http://www.siemens.com/sc/declarationofdecontamination)

6.5 Disposal

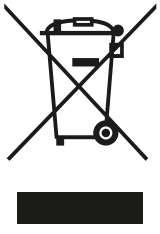

Devices described in this manual should be recycled. They may not be disposed of in the municipal waste disposal services according to the Directive 2012/19/EC on waste electronic and electrical equipment (WEEE).

Devices can be returned to the supplier within the EC, or to a locally approved disposal service for eco-friendly recycling. Observe the specific regulations valid in your country.

Further information about devices containing batteries can be found at: Information on battery/product return (WEEE) (https://support.industry.siemens.com/cs/document/109479891/)

Technical data 7

7.1 All device versions

7.1.1 Rated conditions

Rated conditions	
Ambient conditions	For use indoors and outdoors.
Ambient temperature	In hazardous areas, observe the maximum permissible ambient temperature corresponding to the temperature class.
• Permissible ambient temperature for operation [2)3)]	-30 ... +80 °C (-22 ... +176 °F)
• Height	2000 m above sea level. At altitudes greater than 2000 m above sea level, use a suitable power supply.
• Relative humidity	0 ... 100%
Degree of pollution	2
Overvoltage category	II
Degree of protection [1)]	IP66 / type 4X
Mounting position	Any; pneumatic connections and exhaust air outlet not facing up in wet environment, Proper mounting (Page 19)
Vibration resistance	
• Harmonic oscillations (sine) according to EN 60068-2-6/10.2008	3.5 mm (0.14"), 2 ... 27 Hz, 3 cycles/axis
	98.1 m/s² (321.84 ft/s²), 27 ... 300 Hz, 3 cycles/axis
• Bumping (half-sine) according to EN 60068-2-27/02.2010	150 m/s² (492 ft/s²), 6 ms, 1000 shocks/axis
• Noise (digitally controlled) according to EN 60068-2-64/04.2009	10 ... 200 Hz; 1 (m/s²)²/Hz (3.28 (ft/s²)²/Hz)
	200 ... 500 Hz; 0.3 (m/s²)²/Hz (0.98 (ft/s²)²/Hz)
	4 hours/axis
• Recommended range of continuous operation of the entire control valve	≤ 30 m/s² (98.4 ft/s²) without resonance peak
Climate class	According to IEC/EN 60721-3
• Storage	1K5, but -40 ... +80°C (1K5, but -40 ... +176°F)
• Transport	2K4, but -40 ... +80°C (2K4, but -40 ... +176°F)

1) Max. impact energy 1 Joule for enclosure with inspection window 6DR5..0 and 6DR5..1 or max. 2 Joule for 6DR5..3

2) At ≤ -10 °C (≤ 14 °F) the display refresh rate of the indicator is limited.

3) The following applies to order suffix (order code) **-Z M40**: -40 ... +80 °C (-40 ... +176°F)

7.1.2 Pneumatic data

Pneumatic data	
Auxiliary power (air supply)	Compressed air, carbon dioxide (CO_2), nitrogen (N), noble gases or cleaned natural gas
• Pressure [1]	1.4 ... 7 bar (20.3 ... 101.5 psi)
Air quality to ISO 8573-1	
• Solid particulate size and density	Class 3
• Pressure dew point	Class 3 (min. 20 K (36 °F) below ambient temperature)
• Oil content	Class 3
Unrestricted flow (DIN 1945)	
• Inlet air valve (ventilate actuator) [2]	
2 bar; 0.1 KV (29 psi; 0.116 CV)	4.1 Nm³/h (18.1 USgpm)
4 bar; 0.1 KV (58 psi; 0.116 CV)	7.1 Nm³/h (31.3 USgpm)
6 bar; 0.1 KV (87 psi; 0.116 CV)	9.8 Nm³/h (43.1 USgpm)
• Exhaust valve (deaerate actuator for all versions except fail in place) [2]	
2 bar; 0.2 KV (29 psi; 0.232 CV)	8.2 Nm³/h (36.1 USgpm)
4 bar; 0.2 KV (58 psi; 0.232 CV)	13.7 Nm³/h (60.3 USgpm)
6 bar; 0.2 KV (87 psi; 0.232 CV)	19.2 Nm³/h (84.5 USgpm)
• Exhaust valve (deaerate actuator for fail in place version)	
2 bar; 0.1 KV (29 psi; 0.116 CV)	4.3 Nm³/h (19.0 USgpm)
4 bar; 0.1 KV (58 psi; 0.116 CV)	7.3 Nm³/h (32.2 USgpm)
6 bar; 0.1 KV (87 psi; 0.116 CV)	9.8 Nm³/h (43.3 USgpm)
Valve leakage	< $6 \cdot 10^{-4}$ Nm³/h (0.0026 USgpm)
Throttle ratio	Adjustable up to ∞: 1
Auxiliary power consumption in the controlled state	< $3.6 \cdot 10^{-2}$ Nm³/h (0.158 USgpm)
Sound pressure level	$L_{A\,eq}$ < 75 dB $L_{A\,max}$ < 80 dB
Sound pressure with installed booster [3]	L_{Aeq} < 95.2 dB $L_{A\,max}$ < 98.5 dB

[1] The following applies to fail in place double acting: 3 ... 7 bar (43.5 ... 101.5 psi)

[2] When using device versions Ex d (6DR5..5-... and 6DR5..6-...), values are reduced by approximately 20%.

[3] Read the warning notice "Increased sound pressure level".

See also

Basic safety instructions (Page 41)

7.1.3 Construction

Construction	
How does it work?	
• Range of stroke (linear actuator)	3 ... 130 mm (0.12 ... 5.12") (angle of rotation of the positioner shaft 16 ... 90°)
• Angle of rotation (part-turn actuator)	30 to 100°
Mounting method	
• On the linear actuator	Using mounting kit 6DR4004-8V and, where necessary, an additional lever arm 6DR4004-8L on actuators according to IEC 60534-6-1 (NAMUR) with a fin, columns, or a plane surface.
• On the part-turn actuator	Using mounting kit 6DR4004-8D or TGX:16300-1556 on actuators with mounting plane according to VDI/VDE 3845 and IEC 60534-6-2: The required mount must be provided on the actuator-side.
Weight, positioner without option modules or accessories	
• 6DR5..0 Glass-fiber reinforced polycarbonate enclosure	Approx. 0.9 kg (1.98 lb)
• 6DR5.11 aluminum enclosure, only single-acting	Approx. 1.3 kg (2.86 lb)
• 6DR5..2 stainless steel enclosure	Approx. 3.9 kg (8.6 lb)
• 6DR5..3 aluminum enclosure	Approx. 1.6 kg (3.53 lb)
• 6DR5..5 aluminum enclosure, flameproof, rugged	Approx. 5.2 kg (11.46 lb)
• 6DR5..6 stainless steel enclosure, flameproof, rugged	Approx. 8.4 kg (18.5 lb)
Material	
• Enclosure	
6DR5..0 polycarbonate	Glass-fiber reinforced polycarbonate (PC)
6DR5.11 aluminum, only single-acting	GD AlSi12
6DR5..2 stainless steel	Austenitic stainless steel 316Cb, mat. No. 1.4581
6DR5..3 aluminum	GD AlSi12
6DR5..5 aluminum, flameproof, rugged	GK AlSi12
6DR5..6 stainless steel enclosure, flameproof, rugged	Austenitic stainless steel 316L, mat. No. 1.4409
• Pressure gauge block	Aluminum AlMgSi, anodized or stainless steel 316
Versions	
• In the polycarbonate enclosure 6DR5..0	Single-acting and double-acting
• In aluminum enclosure 6DR5.11	Single-acting
• In aluminum enclosures 6DR5..3 and 6DR5..5	Single-acting and double-acting
• In stainless steel enclosures 6DR5..2 and 6DR5..6	Single-acting and double-acting
Torques	
• Part-turn actuator fixing screws DIN 933 M6x12-A2	5 Nm (3.7 ft lb)
• Linear actuator fixing screws DIN 933 M8x16-A2	12 Nm (8.9 ft lb)
• Gland pneumatic G¼	15 Nm (11.1 ft lb)
• Pneumatic gland 1/4-18 NPT	
Without sealant	12 Nm (8.9 ft lb)

Construction	
With sealant	6 Nm (4.4 ft lb)
• Cable glands	
Screw-in torque for plastic gland in all enclosures	4 Nm (3 ft lb)
Screw-in torque for cable gland made of metal/stainless steel in polycarbonate enclosure	6 Nm (4.4 ft lb)
Screw-in torque for metal/stainless steel glands in aluminum/stainless steel enclosure	6 Nm (4.4 ft lb)
Screw-in torque for NPT adapter made of metal/stainless steel in polycarbonate enclosure	8 Nm (5.9 ft lb)
Screw-in torque for NPT adapter made of metal/stainless steel in aluminum/stainless steel enclosure	15 Nm (11.1 ft lb)
Screw-in torque for NPT gland in the NPT adapter NOTE: To avoid damage to the device, the NPT adapter must be held in place while the NPT gland is screwed into the NPT adapter.	68 Nm (50 ft lb)
Tightening torque for union nut made of plastic	2.5 Nm (1.8 ft lb)
Tightening torque for union nut made of metal/stainless steel	4 Nm (3 ft lb)
• Pressure gauge block fixing screws	6 Nm (4.4 ft lb)
Manometer	
• Degree of protection	
Manometer made of plastic	IP31
Manometer, steel	IP44
Manometer made of stainless steel 316	IP54
• Vibration resistance	In accordance with DIN EN 837-1
Connections, electrical	
• Screw terminals	2.5 mm^2 AWG30-14
• Cable gland	
Without Ex protection as well as with Ex i	M20 x 1.5 or 1/2-14 NPT
With explosion protection Ex d	Ex d-certified M20 x 1.5; 1/2-14 NPT or M25 x 1.5
Connections, pneumatic	Female thread G¼ or ¼-18 NPT

7.1.4 Controller

Controller	
Control unit	
• Five-point controller	Adaptive
• Dead zone	
dEbA = auto	Adaptive
dEbA = 0.1 ... 10 %	Can be set as fixed value
Analog-to-digital converter	

Controller	
• Scanning time	10 ms
• Resolution	≤ 0,05 %
• Transmission error	≤ 0,2 %
• Temperature influence	≤ 0.1 %/10 K (≤ 0.1 %/18 °F)

7.1.5 Certificates and approvals

7.1.5.1 Breakdown of the article numbers

Each device has a nameplate. This nameplate shows a specific article number for the device. Lower-case letters are used and explained in the tables below for the variable digits in the article number. Each variable that is used stands for a different order version. You will find the order data in the FI 01 catalog on the Internet.

Table 7-1 Article number

1	2	3	4	5	6	7	-	8	9	10	11	12	-	13	14	15	16	-				
6	D	R	5	a	*	b	-	0	c	d	e	f	-	g	*	*	h	-	Z	j	j	j

Table 7-2 Enclosure in explosion-proof version and the relevant variables

Enclosure polycarbonate 6DR5 (b = 0)	Enclosure aluminum single-acting 6DR5 (b = 1)	Enclosure stainless steel 6DR5 (b = 2)	Enclosure aluminum single/ double-acting 6DR5 (b = 3)
Enclosure aluminum flameproof 6DR5 (b = 5)		Enclosure stainless steel flameproof 6DR5 (b = 6)	

6DR5a*b-0cdef-g**h-Zjjj	If enclosure b =	If type of protection c =	If order code Z =
Electronics: a =			
• 0, 2, 5, 6	0, 1, 2, 3	D, E, G, F, K	-
• 0, 1, 2, 3, 5, 6	5, 6	E	-
• 0, 2, 5, 6	5, 6	E	K50
• 0, 2, 5, 6	5, 6	G, F, K	-

6DR5a*b-0cdef-g**h-Zjjj	If enclosure b =	If type of protection c =	If order code Z =
• 1	3	D, E, G, F, K	P01…P02
Enclosure version b =			
0, 1, 2, 3, 5, 6			
Type of protection c =			
D, E, F, G, K			
Connection thread d =			
• G, N, M, P, R, S	0, 1, 2, 3		
• G, N, M, P, Q	5, 6		
Limit monitor e =			
0, 1, 2, 3, 9			
Option modules f =			
0, 1, 2, 3			
Customer-specific design g =			
0, 3, 7			
Pneumatic accessories h =			
0, 1, 2, 3, 4, 9R**			
Order code Z = jjj			
A**, C**, D53…D57, F**, K50, L1A, M40, P01…P02, R**, S**, Y**			

7.1.5.2 Device and option modules

Type of protection 6DR5ayb-*cdef-g*Ah-Zjjj	Ex marking Ⓔx ATEX 205947X IECEx TUN 17.0023X	Ex marking FM 17US0053X CSA 18CA70166848X
For c = D, • a = 0, 2, 5, 6 and b = 1, 2, 3 • a = 1 and b = 3	II 2 D Ex tb IIIC T100°C Db II 3 G Ex ec IIC T6/T4 Gc	Zn 21 AEx tb IIIC T100°C Db Zn 21 Ex tb IIIC T100°C Db DIP Cl II, III Div 1 Gp E-G Cl I Zn 2 AEx nA IIC Gc Cl I Zn 2 Ex nA IIC Gc NI Cl I Div 2 Gp A-D
For c = E, • a = 0, 2, 5, 6 and b = 0	II 2 G Ex ia IIC T6/T4 Gb II 3 G Ex ic IIC T6/T4 Gc	Cl I Zn 1 AEx ib IIC Gb Cl I Zn 1 Ex ib IIC Gb IS Cl I Div 1 Gp A-D
For c = E, • a = 0, 2, 5, 6 and b = 1, 2, 3 • a = 1 and b = 3	II 2 G Ex ia IIC T6/T4 Gb II 3 G Ex ic IIC T6/T4 Gc II 2 D Ex ia IIIC T130°C Db	Cl I Zn 1 AEx ib IIC Gb Cl I Zn 1 Ex ib IIC Gb Zn 21 AEx ib IIIC, T130°C Db Zn 21 Ex ib IIIC, T130°C Db IS Cl I, II, III Div 1 Gp A-G
For c = E, • a = 0, 1, 2, 3, 5, 6 and b = 5, 6	II 2 G Ex db IIC T6/T4 Gb II 2 D Ex tb IIIC T100°C Db	FM Cl I Zn 1 AEx db IIC Gb XP Cl I Div 1 Gp A-D CSA Cl I Zn 1 Ex db IIC Gb XP Cl I Div 1 Gp C-D FM + CSA Zn 21 AEx tb IIIC T100°C Db Zn 21 Ex tb IIIC T100°C Db DIP Cl II, III Div 1 Gp E-G
For c = F, • a = 0, 2, 5, 6 and b = 1, 2, 3, 5, 6 • a = 1 and b = 3 Non Contacting Sensor (NCS) • 6DR4004-6N	II 2 G Ex ia IIC T6/T4 Gb II 3 G Ex ic IIC T6/T4 Gc II 2 D Ex ia IIIC T130°C Db II 3 G Ex ec IIC T6/T4 Gc	Cl I Zn 1 AEx ib IIC Gb Cl I Zn 1 Ex ib IIC Gb Zn 21 AEx ib IIIC T130°C Db Zn 21 Ex ib IIIC T130°C Db IS Cl I, II, III Div 1 Gp A-G Cl I Zn 2 AEx nA IIC Gc Cl I Zn 2 Ex nA IIC Gc NI Cl I Div 2 Gp A-D

Type of protection 6DR5ayb-*cdef-g*Ah-Zjjj	Ex marking Ⓔx ATEX 205947X IECEx TUN 17.0023X	Ex marking FM 17US0053X CSA 18CA70166848X
For c = G, • a = 0, 2, 5, 6 and b = 1, 2, 3, 5, 6 • a = 1 and b = 3	II 3 G Ex ec IIC T6/T4 Gc	Cl I Zn 2 AEx nA IIC Gc Cl I Zn 2 Ex nA IIC Gc NI Cl I Div 2 Gp A-D
For c = K and b = 1, 2, 3, 5, 6 • a = 0, 2, 5, 6 and b = 1, 2, 3, 5, 6 • a = 1 and b = 3 External Position Transmitter: • 6DR4004-1ES • 6DR4004-2ES • 6DR4004-3ES • 6DR4004-4ES	II 2 G Ex ia IIC T6/T4 Gb II 3 G Ex ic IIC T6/T4 Gc II 2 D Ex ia IIIC T130°C Db II 2 D Ex tb IIIC T100°C Db II 3 G Ex ec IIC T6/T4 Gc	Cl I Zn 1 AEx ib IIC Gb Cl I Zn 1 Ex ib IIC Gb Zn 21 AEx ib IIIC, T130°C Db Zn 21 Ex ib IIIC, T130°C Db IS Cl I, II, III Div 1 Gp A-G Cl I Zn 2 AEx nA IIC Gc Cl I Zn 2 Ex nA IIC Gc NI Cl I Div 2 Gp A-D Zn 21 AEx tb IIIC T100°C Db Zn 21 Ex tb IIIC T100°C Db DIP Cl II, III Div 1 Gp E-G

7.1.5.3 Maximal permissible ambient temperature ranges

Positioner and option modules	*Temperature class T4*	*Temperature class T6*
Positioner		
• 6DR5ayb-0cdef-g*Ah-Z jjj	-30 °C ≤Ta ≤ +80 °C	-30 °C ≤Ta ≤ +50 °C
• 6DR5ayb-0cdef-g*Ah-Z **M40**	-40 °C ≤Ta ≤ +80 °C	-40 °C ≤Ta ≤ +50 °C
• 6DR5ayb-0cdef-g*Ah-Z jjj for a = 0, 1, 2 and f = 0, 2	-30 °C ≤Ta ≤ +80 °C	-30 °C ≤Ta ≤ +60 °C
• 6DR5ayb-0cdef-g*Ah-Z **M40** for a = 0, 1, 2 and f = 0, 2	-40 °C ≤Ta ≤ +80 °C	-40 °C ≤Ta ≤ +60 °C
Option modules		
• Non-Contacting Sensor (NCS) 6DR4004-6N	-40 °C ≤Ta ≤ +90 °C	-40 °C ≤Ta ≤ +70 °C
• External Position Transmitter (Potentiometer) 6DR4004-1ES	-40 °C ≤Ta ≤ +90 °C	-40 °C ≤Ta ≤ +60 °C
• External Position Transmitter (NCS) 6DR4004-2ES	-40 °C ≤Ta ≤ +90 °C	-40 °C ≤Ta ≤ +50 °C
• External Position Transmitter (NCS, ILS) 6DR4004-3ES		
• External Position Transmitter (NCS, MLS) 6DR4004-4ES		

7.1.6 Natural gas as actuator medium

Introduction

Note when using an actuator with natural gas that this can escape at the exhaust air outlets.

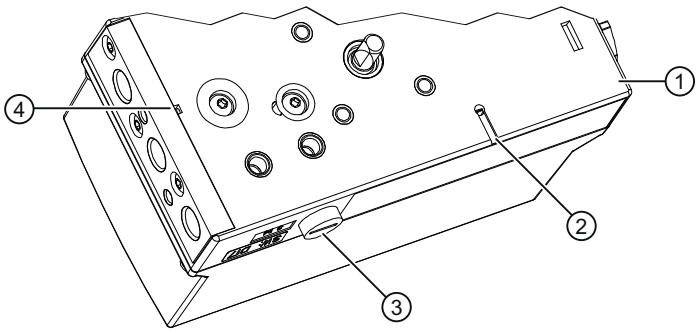

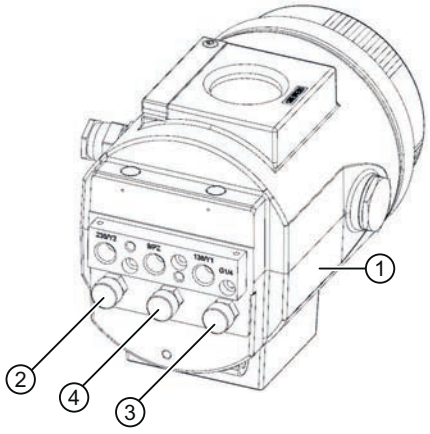

① Base plate
② Exhaust air outlet enclosure ventilation
③ Exhaust air outlet sound absorber
④ Exhaust air outlet near the pneumatic connections

Note

The following applies for exhaust air outlet with sound absorber ③:

The positioner is supplied as standard with a sound absorber. To provide an outlet for the exhaust air, replace the sound absorber by a G¼ pipe coupling.

The following applies for enclosure ventilation ② and control air outlet ④:

1. With the "flameproof enclosure" device version in an aluminum enclosure with order suffix -Z K50 "Operation with natural gas", you can completely collect and discharge the escaping natural gas.
2. In all other device versions, the escaping natural gas is released into the environment.

Maximum values for escaping natural gas

- The quantity of escaping natural gas is negligible during regulated operation.
- If a control error occurs, a maximum of 30 Nl/min of natural gas will escape at the enclosure vent ② and a maximum of 89 Nl/min at the control air outlet ④.

7.2 With and without HART

7.2.1 Electrical data

	Basic electronics without explosion protection	Basic electronics with explosion protection Ex "db"	Basic electronics with explosion protection Ex "ia"	Basic electronics with explosion protection Ex "ic", "ec", "tb"
Current input I_W				
• Rated signal range	0/4 ... 20 mA			
• Test voltage	840 V DC, 1 s			
• Digital input DI1 (terminals 9/10; galvanically connected to basic device)	Suitable only for floating contact; max. contact load < 5 µA with 3 V			
2-wire connection 6DR50.. and 6DR53.. Without HART 6DR51.. and 6DR52.. With HART				
Current to maintain the auxiliary power	≥ 3.6 mA			
Required load voltage U_B (corresponds to Ω at 20 mA)				
• Without HART (6DR50..)				
Typical	6.36 V (= 318 Ω)	6.36 V (= 318 Ω)	7.8 V (= 390 Ω)	7.8 V (= 390 Ω)
Max.	6.48 V (= 324 Ω)	6.48 V (= 324 Ω)	8.3 V (= 415 Ω)	8.3 V (= 415 Ω)
• Without HART (6DR53..)				
Typical	7.9 V (= 395 Ω)	-	-	-
Max.	8.4 V (= 420 Ω)	-	-	-
• With HART (6DR51..)				
Typical	6.6 V (= 330 Ω)	6.6 V (= 330 Ω)	-	-
Max.	6.72 V (= 336 Ω)	6.72 V (= 336 Ω)	-	-
• With HART (6DR52..)				
Typical	-	8.4 V (= 420 Ω)	8.4 V (= 420 Ω)	8.4 V (= 420 Ω)
Max.	-	8.8 V (= 440 Ω)	8.8 V (= 440 Ω)	8.8 V (= 440 Ω)
• Static destruction limit	± 40 mA	± 40 mA	-	-
Effective inner capacitance C_i	-	-		
• Without HART	-	-	11 nF	"ic": 11 nF
• With HART	-	-	11 nF	"ic": 11 nF
Effective inner inductance L_i	-	-		
• Without HART	-	-	209 µH	"ic": 209 µH
• With HART	-	-	312 µH	"ic": 312 µH

	Basic electronics without explosion protection	Basic electronics with explosion protection Ex "db"	Basic electronics with explosion protection Ex "ia"	Basic electronics with explosion protection Ex "ic", "ec", "tb"
For connecting to circuits with the following peak values	-	-	U_i = 30 V I_i = 100 mA P_i = 1 W	"ic": U_i = 30 V I_i = 100 mA "ec"/"t": U_n ≤ 30 V I_n ≤ 100 mA

3-/4-wire connection
6DR52.. With HART, explosion-protected
6DR53.. Without HART, not explosion-protected

Load voltage at 20 mA	≤ 0.2 V (= 10 Ω)	≤ 0.2 V (= 10 Ω)	≤ 1 V (= 50 Ω)	≤ 1 V (= 50 Ω)
Auxiliary power U_{Aux}	18 ... 35 V DC	18 ... 35 V DC	18 ... 30 V DC	18 ... 30 V DC
• Current consumption I_{Aux}	(U_{Aux} - 7.5 V)/2.4 kΩ [mA]			
For connecting to circuits with the following peak values	-	-	U_i = 30 V I_i = 100 mA P_i = 1 W	"ic": U_i = 30 V I_i = 100 mA "ec"/"t": U_n ≤ 30 V I_n ≤ 100 mA
Effective inner capacitance C_i	-	-	22 nF	22 nF
Effective inner inductance L_i	-	-	0.12 mH	0.12 mH
Galvanic isolation	Between U_{Aux} and I_W	Between U_{Aux} and I_W	Between U_{Aux} and I_W (2 intrinsically safe circuits)	Between U_{Aux} and I_W

7.2.2 Electrical data for pressure sensors

	Basic electronics without explosion protection	Basic electronics with explosion protection Ex "db"	Basic electronics with explosion protection Ex "ia"	Basic electronics with explosion protection Ex "ic", "ec", "tb"
Basic electronics for pressure sensors 6DR51.. -Z P01 und -Z P02 HART, non-Ex 6DR51.. -Z P01 und -Z P02 HART, Ex				
Current input I_W				
• Rated signal range	0/4 ... 20 mA			
• Test voltage	840 V DC, 1 s			
• Digital input DI1 (terminals 9/10; galvanically connected to basic device)	Suitable only for floating contact; max. contact load < 5 µA with 3 V			
Current to maintain the auxiliary power	≥ 3.6 mA			

	Basic electronics without explosion protection	Basic electronics with explosion protection Ex "db"	Basic electronics with explosion protection Ex "ia"	Basic electronics with explosion protection Ex "ic", "ec", "tb"
Required load voltage U_B (corresponds to Ω at 20 mA)	9.4 V (= 470 Ω)	9.4 V (= 470 Ω)	9 V (= 450 Ω)	9 V (= 450 Ω)
Static destruction limit	± 30 V	± 30 V	-	-
Effective inner capacitance C_i	-	-	12.2 nF	"ic": 12.2 nF
Effective inner inductance L_i	-	-	105 µH	"ic": 105 µH
For connecting to circuits with the following peak values	-	-	U_i = 30 V I_i = 100 mA P_i = 1 W	"ic": U_i = 30 V I_i = 100 mA "ec"/"t": U_n ≤ 30 V I_n ≤ 100 mA

7.2.3 Communication (HART)

HART communication	
HART version	7
PC parameter assignment software	SIMATIC PDM; supports all device objects. The software is not included in the scope of delivery.

7.3 With PROFIBUS PA / with FOUNDATION Fieldbus

7.3.1 Electrical data

	Basic device without explosion protection	Basic device with explosion protection Ex "db"	Basic device with explosion protection Ex "ia"	Basic device with explosion protection Ex "ic", "ec", "tb"
Auxiliary power supply bus circuit		Bus-powered		
Bus voltage	9 ... 32 V	9 ... 32 V	9 ... 24 V	9 ... 32 V
For connecting to circuits with the following peak values				
• Bus connector with FISCO supply unit	-	-	U_i = 17.5 V I_i = 380 mA P_i = 5.32 W	"ic": U_i = 17.5 V I_i = 570 mA "ec"/"tb": U_n ≤ 32 V

	Basic device without explosion protection	Basic device with explosion protection Ex "db"	Basic device with explosion protection Ex "ia"	Basic device with explosion protection Ex "ic", "ec", "tb"
• Bus connector with barrier			U_i = 24 V I_i = 250 mA P_i = 1.2 W	"ic": U_i = 32 V "ec"/"tb": U_n ≤ 32 V
Effective inner capacitance C_i	-	-	Negligible	Negligible
Effective inner inductance L_i	-	-	8 µH	"ic": 8 µH
Current consumption	11.5 mA ± 10 %			
Additional fault current	0 mA			
Safety shutdown can be activated using "Jumper" (terminals 81 and 82)	Electrically isolated from bus circuit and digital input			
• Input resistance	> 20 kΩ			
• Signal status "0" (shutdown active)	0 ... 4.5 V or unused			
• Signal status "1" (shutdown inactive)	13 ... 30 V			
• For connecting to power source with the following peak values	-	-	U_i = 30 V Ii = 100 mA P_i = 1 W	"ec": U_n ≤ 30 V I_n ≤ 100 mA "ic": U_i = 30 V I_i = 100 mA
• Effective internal capacitance and inductance	-	-	Negligible	Negligible
Digital input DI1 (terminals 9 and 10) electrically connected to the bus circuit	Jumpered or connection to switch contact. Suitable only for floating contact; max. contact load < 5 µA with 3 V			
Galvanic isolation				
• For basic device without explosion protection and for basic device with Ex "db"	Galvanic isolation between the basic device and the input for safety shutdown and the outputs of option modules.			
• For basic device Ex "ia"	The basic device, the input for safety shutdown, and the outputs of option modules are individual intrinsically safe circuits.			
• For basic device Ex "ic", "ec", "tb"	Galvanic isolation between the basic device and the input for safety shutdown and the outputs of option modules.			
Test voltage	DC 840 V, 1 s			

7.3.2 PROFIBUS PA communication

Communication	Layers 1 + 2 as per PROFIBUS PA, transmission technique as per IEC 1158-2; slave function layer 7 (protocol layer) as per PROFIBUS DP, standard EN 50170 with the extended PROFIBUS functionality (all data is acyclic, manipulated variable, feedbacks and statuses are additionally cyclic)
C2 connections	Four connections with the master class 2 are supported; automatic connection termination 60 s after interruption in communication
Device profile	PROFIBUS PA profile B, version 3.0; over 150 objects
Response time for a master telegram	Typically, 10 ms
Device address	126 (in the as-delivered condition)
PC parameter assignment software	SIMATIC PDM; supports all device objects. The software is not included in the scope of delivery.

7.3.3 FOUNDATION Fieldbus communication

Communication group and class	According to the technical specification of the Fieldbus Foundation for H1 communication
Function blocks	Group 3, Class 31PS (Publisher Subscriber) 1 resource block (RB2) 1 analog output function block (AO) 1 PID function block (PID) 1 transducer block (standard advanced positioner valve)
Execution times of the blocks	AO: 60 ms PID: 80 ms
Physical layer profile	123, 511
FF registration	Tested with ITK 5.0
Device address	22 (when delivered)

7.4 Option modules

7.4.1 Digital I/O Module (DIO) 6DR4004-6A / -8A

	Without explosion protection or suitable for use in Ex "db" version	With explosion protection Ex "ia"	With explosion protection Ex "ic", "ec", "tb"
	6DR4004-8A	6DR4004-6A	6DR4004-6A
3 digital output current circuits • Digital output DO1: Terminals 41 and 42 • Digital output DO2: Terminals 51 and 52 • Fault message output: Terminals 31 and 32			
• Auxiliary power supply U_{Aux}	≤ 35 V and the current consumption is to be limited to < 25 mA	-	-
• Signal status			
High (not addressed)	Conductive, R = 1 kΩ, +3/-1 % *)	≥ 2.1 mA	≥ 2.1 mA
Low *) (addressed)	Deactivated, I_R < 60 µA	≤ 1.2 mA	≤ 1.2 mA
*) The status is also Low if the basic device is faulty or without a auxiliary power.	*) When using in the flameproof enclosure, the current consumption must be restricted to 10 mA per output.	Switching threshold for supply according to EN 60947-5-6: U_{Aux} = 8.2 V, R_i = 1 kΩ	Switching threshold for supply according to EN 60947-5-6: U_{Aux} = 8.2 V, R_i = 1 kΩ
• For connecting to circuits with the following peak values	-	U_i = 15 V DC I_i = 25 mA P_i = 64 mW	"ic": U_i = 15 V DC I_i = 25 mA "ec"/"tb": U_n ≤ 15 V DC
Effective internal capacitance	-	C_i = 5.2 nF	C_i = 5.2 nF
Effective internal inductance	-	L_i = negligibly small	L_i = negligibly small

1 digital input current circuit • Digital input DI2: Terminals 11 and 12, terminals 21 and 22 (jumper)	
• Galvanically connected with the basic device	
Signal status 0	Floating contact, open
Signal status 1	Floating contact, closed
Contact load	3 V, 5 µA
• Electrically isolated from the basic device	
Signal status 0	≤ 4.5 V or open
Signal status 1	≥ 13 V
Internal resistance	≥ 25 kΩ

	Without explosion protection or suitable for use in Ex "db" version	With explosion protection Ex "ia"	With explosion protection Ex "ic", "ec", "tb"
	6DR4004-8A	6DR4004-6A	6DR4004-6A
• Static destruction limit	± 35 V	-	-
• Connecting to circuits with the following peak values	-	U_i = DC 25.2 V	"ic": U_i = DC 25.2 V "ec"/"tb": U_n ≤ DC 25.2 V
Effective internal capacitance	-	C_i = negligibly small	C_i = negligibly small
Effective internal inductance	-	L_i = negligibly small	L_i = negligibly small
Galvanic isolation	The three outputs, the BI2 input and the basic device are galvanically isolated from each other.		
Test voltage	DC 840 V, 1 s		

7.4.2 Analog Input Module (AIM) 6DR4004-6F / -8F

	Without explosion protection	With explosion protection Ex "ia", "ic"	With explosion protection Ex "ec", "tb"
	6DR4004-8F	6DR4004-6F	6DR4004-6F
The Analog Input Module (AIM) 6DR4004-6F and -8F is required to connect a Non Contacting Sensor (NCS) or External Position Transmitter 6DR4004-1ES to -4ES. For devices without explosion protection, other types of potentiometers with resistance values between 3 and 20 KΩ can be connected.			
R-potentiometer			
• Peak values when supplied by other basic devices (6DR50/1/2/3/9)	U_{max} = 5 V	U_o = 5 V I_o = 100 mA P_o = 33 mW C_o = 1 µF L_o = 1 mH	U_{max} = 5 V
• Maximum values when powered by the base unit with PA (6DR55) or FF communication (6DR56)	U_{max} = 5 V	U_o = 5 V I_o = 75 mA static I_o = 160 mA transient P_o = 120 mW C_o = 1 µF L_o = 1 mH	U_{max} = 5 V
Signal 20 mA			
• Rated signal range	0 ... 20 mA		-
• Internal load R_B	200 Ω		-
• Static destruction limit	40 mA		-
Signal 10 V			
• Rated signal range	0 ... 10 V		-
• Internal resistance R_i	25 kΩ		-
• Static destruction limit	20 V		-
Supply and signal power circuits	Galvanically connected with the basic device		

7.4.3 Inductive Limit Switches (ILS) 6DR4004-6G / -8G

	Without explosion protection	With explosion protection Ex "ia"	With explosion protection Ex "ic", "ec", "tb"
	6DR4004-8G	6DR4004-6G	6DR4004-6G
Limit encoder with slotted initiators and fault message output			
2 slotted initiators • Digital output (limit monitor) A1: Terminals 41 and 42 • Digital output (limit monitor) A2: Terminals 51 and 52			
• Connection	2-wire technology in accordance with EN 60947-5-6 (NAMUR), for switching amplifiers connected on load side		
• Signal state High (not triggered)	> 2.1 mA		
• Signal state Low (triggered)	< 1.2 mA		
• 2 slotted initiators	Type SJ2-SN		
• Function	NC contact (NC, normally closed)		
• Connecting to circuits with the following peak values	Rated voltage 8 V, power consumption: ≥ 3 mA (limit not activated), ≤ 1 mA (limit activated)	U_i = DC 15 V I_i = 25 mA P_i = 64 mW	"ic": U_i = DC 15 V I_i = 25 mA "ec"/"tb": U_n ≤ DC 15 V P_n ≤ 64 mW
Effective internal capacitance	-	C_i = 161 nF	C_i = 161 nF
Effective internal inductance	-	L_i = 120 µH	L_i = 120 µH
1 fault message output • Digital output: Terminals 31 and 32			
• Connection	At switching amplifier in accordance with EN 60947-5-6: (NAMUR), U_{Aux} = 8.2 V, R_i = 1 kΩ).		
• Signal state High (not triggered)	R = 1.1 kΩ	> 2.1 mA	> 2.1 mA
• Signal state Low (triggered)	R = 10 kΩ	< 1.2 mA	< 1.2 mA
• Auxiliary power U_{Aux}	U_{Aux} ≤ DC 35 V I ≤ 20 mA	-	-
• Connecting to circuits with the following peak values	-	U_i = DC 15 V I_i = 25 mA P_i = 64 mW	"ic": U_i = DC 15 V I_i = 25 mA "ec"/"tb": U_n ≤ DC 15 V P_n ≤ 64 mW
Effective internal capacitance	-	C_i = 5.2 nF	C_i = 5.2 nF
Effective internal inductance	-	L_i = negligibly small	L_i = negligibly small
Galvanic isolation	The 3 outputs are galvanically isolated from the basic device.		
Test voltage	DC 840 V, 1 s		

7.4.4 Analog Output Module (AOM) 6DR4004-6J / -8J

	Without explosion protection or suitable for use in Ex d version	With explosion protection Ex "ia"	With explosion protection Ex "ic", "ec", "tb"
	6DR4004-8J	6DR4004-6J	6DR4004-6J
Direct current output for position feedback			
1 current output, terminals 61 and 62		2-wire connection	
• Rated signal range		4 ... 20 mA, short-circuit proof	
• Dynamic range		3.6 ... 20.5 mA	
• Auxiliary power supply U_{Aux}	+12 ... +35 V	+12 ... +30 V	+12 ... +30 V
• External load R_B [kΩ]		≤ (U_{Aux} [V] - 12 V)/I [mA]	
• Transmission error		≤ 0.3%	
• Temperature influence		≤ 0.1%/10 K (≤ 0.1%/18 °F)	
• Resolution		≤ 0.1%	
• Residual ripple		≤ 1 %	
• For connecting to circuits with the following peak values	-	U_i = DC 30 V I_i = 100 mA P_i = 1 W	"ic": U_i = DC 30 V I_i = 100 mA "ec"/"tb": U_n ≤ DC 30 V I_n ≤ 100 mA P_n ≤ 1 W
Effective internal capacitance	-	C_i = 2 nF	C_i = 2 nF
Effective internal inductance	-	L_i = 3 µH	L_i = 3 µH
Galvanic isolation	Electrically isolated from the alarm option and safely isolated from the basic device		
Test voltage		DC 840 V, 1 s	

7.4.5 Mechanic Limit Switches (MLS) 6DR4004-6K / -8K

	Without explosion protection	With explosion protection Ex "ia"	With explosion protection Ex "ic", "tb"
	6DR4004-8K	6DR4004-6K	6DR4004-6K
Limit encoder with mechanical switching contacts			
2 limit contacts • Digital output DO1: Terminals 41 and 42 • Digital output DO2: Terminals 51 and 52			
• Max. switching current AC/DC	4 A	-	-

	Without explosion protection	With explosion protection Ex "ia"	With explosion protection Ex "ic", "tb"
	6DR4004-8K	6DR4004-6K	6DR4004-6K
• For connecting to circuits with the following peak values	-	U_i = 30 V I_i = 100 mA P_i = 750 mW	"ic": U_i = 30 V I_i = 100 mA "tb": U_n = 30 V I_n = 100 mA
Effective internal capacitance	-	C_i = negligibly small	C_i = negligibly small
Effective internal inductance	-	L_i = negligibly small	L_i = negligibly small
• Max. switching voltage AC/DC	250 V/24 V	DC 30 V	DC 30 V
1 fault message output • Digital output: Terminals 31 and 32			
• Connection	On switching amplifier according to EN 60947-5-6: (NAMUR), U_{Aux} = 8.2 V, Ri = 1 kΩ).		
• Signal state High (not triggered)	R = 1.1 kΩ	> 2.1 mA	> 2.1 mA
• Signal state Low (triggered)	R = 10 kΩ	< 1.2 mA	< 1.2 mA
• Auxiliary power	U_{Aux} ≤ DC 35 V I ≤ 20 mA	-	-
• Connecting to circuits with the following peak values	-	U_i = 15 V I_i = 25 mA P_i = 64 mW	"ic" : U_i = 15 V I_i = 25 mA "tb": U_n = 15 V I_n = 25 mA
Effective internal capacitance	-	C_i = 5.2 nF	C_i = 5.2 nF
Effective internal inductance	-	L_i = negligibly small	L_i = negligibly small
Galvanic isolation	The 3 outputs are galvanically isolated from the basic device		
Test voltage	3150 V DC, 2 s		
Rated condition height	Max. 2 000 m above sea level. Use a suitable power supply at an altitude of more than 2 000 m above sea level.	-	-

7.4.6 Internal NCS module 6DR4004-5L / 6DR4004-5LE

Additional modules	Without explosion protection	With explosion protection Ex "ia"	With explosion protection Ex "ic", "ec", "tb"
	6DR4004-5L	6DR4004-5LE	6DR4004-5LE
Linearity (after corrections made by positioner)	± 1 %		
Hysteresis	± 0.2 %		

Additional modules	Without explosion protection	With explosion protection Ex "ia"	With explosion protection Ex "ic", "ec", "tb"
	6DR4004-5L	6DR4004-5LE	6DR4004-5LE
For connecting to circuits with the following peak values	-	U_i = 5 V I_i = 160 mA P_i = 120 mW	U_i = 5 V
Effective internal capacitance	-	C_i = [1]	C_i = [1]
Effective internal inductance	-	L_i = [2]	L_i = [2]

[1] C_i = 110 nF + 110 nF per meter of connecting cable

[2] L_i = 270 µH + 6.53 µH per meter of connecting cable

7.4.7 External position detection

7.4.7.1 Rated conditions for external position detection

Rated conditions	
Ambient temperature	In hazardous areas, observe the maximum permissible ambient temperature corresponding to the temperature class.
• Permissible ambient temperature for operation	-40 ... +90 °C (-40 ... +194 °F)
Degree of protection [1]	IP66/Type 4X according to UL 50 E
Climate class	According to IEC/EN 60721-3
• Storage	1K5, but -40 ... +90 °C (1K5, but -40 ... +194 °F)
• Transport	2K4, but -40 ... +90 °C (2K4, but -40 ... +194 °F)
• Operation	4K3, but -40 ... +90 °C (4K3, but -40 ... +194 °F)

[1]) Impact energy max. 1 joule.

See also

Construction (Page 59)

7.4.7.2 External NCS sensors 6DR4004-6N/-8N

	Without explosion protection	With explosion protection Ex "ia", "ic"	With explosion protection Ex "ec"
	6DR4004-8N	6DR4004-6N	6DR4004-6N
Travel range			
• Linear actuator 6DR4004-6/-8N.20	3 to 14 mm (0.12 to 0.55")		
• Linear actuator 6DR4004-6/-8N.30	10 to 130 mm (0.39 to 5.12"); up to 200 mm (7.87") on request		
• Part-turn actuator	30 to 100°		

	Without explosion protection	With explosion protection Ex "ia", "ic"	With explosion protection Ex "ec"
	6DR4004-8N	6DR4004-6N	6DR4004-6N
Linearity (after corrections made by positioner)	± 1 %		
Hysteresis	± 0.2 %		
Temperature influence (range: rotation angle 120° or stroke 14 mm)	≤ 0.1 %/10 K (≤ 0.1 %/18 °F) for -20 to +90 °C (-4 to +194 °F) ≤ 0.2%/10 K (≤ 0.2%/18 °F) for -40 to -20 °C (-40 to -4 °F)		
Climate class	According to IEC/EN 60721-3		
• Storage	1K5, but -40 to +90 °C (-40 to +194 °F)		
• Transport	2K4, but -40 to +90 °C (-40 to +194 °F)		
Vibration resistance			
• Harmonic oscillations (sine) according to IEC 60068-2-6	3.5 mm (0.14"), 2 to 27 Hz, 3 cycles/axis 98.1 m/s² (321.84 ft/s²), 27 to 300 Hz, 3 cycles/axis		
• Bumping according to IEC 60068-2-29	300 m/s²(984 ft/s²), 6 ms, 4000 shocks/axis		
Torque for cable gland nut made of	Plastic	Metal	
	2.5 Nm (1.8 ft lb)	4.2 Nm (3.1 ft lb)	
Torque of hexagon socket-head screw M6x12 (shaft end or mounting bracket)	4 Nm (3 ft lb)		
Torque of hexagon socket head screw M6x25 (mounting console or mounting plate)	4 Nm (3 ft lb)		
Torque of hexagon socket head screw M3x12 (clamping ring)	1 Nm (0.7 ft lb)		
Degree of protection	IP68 according to IEC/EN 60529; Type 4X according to UL 50 E		
For connecting to circuits with the following peak values	-	U_i = 5 V I_i = 160 mA P_i = 120 mW	U_i = 5 V
Effective internal capacitance	-	C_i = [1]	C_i = [1]
Effective internal inductance	-	L_i = [2]	L_i = [2]

[1] C_i = 110 nF + 110 nF per meter of connecting cable

[2] L_i = 270 µH + 6.53 µH per meter of connecting cable

7.4.7.3 External Position Transmitter (NCS) 6DR4004-2ES

	Without explosion protection	With explosion protection Ex "ia", "ic"	With explosion protection Ex "ec", "tb"
Travel range			
• Linear actuator	3 to 14 mm (0.12 to 0.55") 10 to 130 mm (0.39 to 5.12"); up to 200 mm (7.87") on request		
• Part-turn actuator	30 to 100°		

	Without explosion protection	With explosion protection Ex "ia", "ic"	With explosion protection Ex "ec", "tb"
Linearity (after corrections made by positioner)	± 1 %		
Hysteresis	± 0.2 %		
Temperature influence (range: rotation angle 120° or stroke 14 mm)	≤ 0.1 %/10 K (≤ 0.1 %/18 °F) for -20 to +90 °C (-4 to +194 °F) ≤ 0.2%/10 K (≤ 0.2%/18 °F) for -40 to -20 °C (-40 to -4 °F)		
Climate class	According to IEC/EN 60721-3		
• Storage	1K5, but -40 to +90 °C (-40 to +194 °F)		
• Transport	2K4, but -40 to +90 °C (-40 to +194 °F)		
Vibration resistance			
• Harmonic oscillations (sine) according to IEC 60068-2-6	3.5 mm (0.14"), 2 to 27 Hz, 3 cycles/axis 98.1 m/s² (321.84 ft/s²), 27 to 300 Hz, 3 cycles/axis		
• Bumping according to IEC 60068-2-29	300 m/s²(984 ft/s²), 6 ms, 4000 shocks/axis		
Torque for cable gland nut made of	Plastic	Metal	
	2.5 Nm (1.8 ft lb)	4.2 Nm (3.1 ft lb)	
Torque of hexagon socket-head screw M6x12 (shaft end or mounting bracket)	4 Nm (3 ft lb)		
Torque of hexagon socket head screw M6x25 (mounting console or mounting plate)	4 Nm (3 ft lb)		
Torque of hexagon socket head screw M3x12 (clamping ring)	1 Nm (0.7 ft lb)		
Degree of protection provided by enclosure	IP66 according to IEC/EN 60529; Type 4X according to UL 50 E		
For connecting to circuits with the following peak values	-	U_i = 5 V I_i = 160 mA P_i = 120 mW	U_i = 5 V
Effective internal capacitance	-	C_i = [1]	C_i = [1]
Effective internal inductance	-	L_i = [2]	L_i = [2]

[1] C_i = 110 nF + 110 nF per meter of connecting cable

[2] L_i = 270 µH + 6.53 µH per meter of connecting cable

7.4.7.4 External Position Transmitter (Potentiometer) 6DR4004-1ES

Additional modules	With explosion protection Ex "ia", "ic"	With explosion protection Ex "ec", "tb"
Degree of protection	IP66 according to IEC/EN 60529; Type 4X according to UL 50 E	
For connecting to circuits with the following peak values	U_i = 5 V	U_i = 5 V
Effective internal capacitance	C_i = 10 nF	-
Effective internal inductance	L_i = 240 µH	-

7.4.7.5 External Position Transmitter (NCS, ILS) 6DR4004-3ES

	Without explosion protection	With explosion protection Ex "ia", "ic"	With explosion protection Ex "ec", "tb"
Degree of protection provided by enclosure	IP66 according to IEC/EN 60529; Type 4X according to UL 50 E		
NCS module (NCS)	**6DR4004-5L**	**6DR4004-5LE**	**6DR4004-5LE**
• For connecting to circuits with the following peak values		U_i = 5 V I_i = 160 mA P_i = 120 mW	U_i = 5 V I_i = 160 mA
• Effective internal capacitance		C_i = 110 nF + 690 pF/m Connecting cable	-
• Effective internal inductance		L_i = 270 µH + 6,53 µH/m Connecting cable	-

	Without explosion protection	With explosion protection Ex "ia", "ic"	With explosion protection Ex "ec", "tb"
Inductive Limit Switches (ILS)	**6DR4004-8G**	**6DR4004-6G**	**6DR4004-6G**
2 slotted initiators • Digital output (slot-type initiators) DO1: Terminals 41 and 42 • Digital output (slot-type initiators) DO2: Terminals 51 and 52			
• Connection	2-wire technology in accordance with EN 60947-5-6 (NAMUR), for switching amplifiers connected on load side		
• Signal state High (not triggered)	> 2.1 mA		
• Signal state Low (triggered)	< 1.2 mA		
• 2 slotted initiators	Type SJ2-SN		
• Function	NC contact (NC, normally closed)		
• Connecting to circuits with the following peak values	Rated voltage 8 V, power consumption: ≥ 3 mA (limit not activated), ≤ 1 mA (limit activated)	U_i = DC 15 V I_i = 25 mA P_i = 64 mW	U_n ≤ DC 15 V I_n = 25 mA
Effective internal capacitance	-	C_i = 161 nF	-
Effective internal inductance	-	L_i = 120 µH	-
1 fault message output • Digital output: Terminals 31 and 32			
• Connection	At switching amplifier in accordance with EN 60947-5-6: (NAMUR), U_{Aux} = 8.2 V, R_i = 1 kΩ)		
• Signal state High (not triggered)	R = 1.1 kΩ	> 2.1 mA	> 2.1 mA
• Signal state Low (triggered)	R = 10 kΩ	< 1.2 mA	< 1.2 mA
• Auxiliary power U_{Aux}	U_{Aux} ≤ DC 35 V I ≤ 20 mA	-	-

	Without explosion protection	With explosion protection Ex "ia", "ic"	With explosion protection Ex "ec", "tb"
Inductive Limit Switches (ILS)	**6DR4004-8G**	**6DR4004-6G**	**6DR4004-6G**
• Connecting to circuits with the following peak values	-	U_i = DC 15 V I_i = 25 mA P_i = 64 mW	U_i = 15 V I_i = 25 mA
Effective internal capacitance	-	C_i = 5.2 nF	-
Effective internal inductance	-	L_i = negligibly small	L_i = negligibly small
Galvanic isolation	The 3 outputs are galvanically isolated from the basic device.		
Test voltage	DC 840 V, 1 s		

7.4.7.6 External Position Transmitter (NCS, MLS) 6DR4004-4ES

	Without explosion protection	With explosion protection Ex "ia", "ic"	With explosion protection Ex "ec", "tb"
Degree of protection provided by enclosure	IP66 according to IEC/EN 60529; Type 4X according to UL 50 E		
NCS module (NCS)	**6DR4004-5L**	**6DR4004-5LE**	**6DR4004-5LE**
• For connecting to circuits with the following peak values		U_i = 5 V I_i = 160 mA P_i = 120 mW	U_i = 5 V I_i = 160 mA
• Effective internal capacitance		C_i = 110 nF + 690 pF/m Connecting cable	-
• Effective internal inductance		L_i = 270 µH + 6,53 µH/m Connecting cable	-

	Without explosion protection	With explosion protection Ex "ia", "ic"	With explosion protection Ex "ec", "tb"
Mechanic Limit Switches (MLS)	**6DR4004-8K**	**6DR4004-6K**	**6DR4004-6K**
2 limit contacts • Switching contact 1: Terminals 41 and 42 • Switching contact 2: Terminals 51 and 52			
• Max. switching current AC/DC	4 A	-	-
• For connecting to circuits with the following peak values	-	U_i = 30 V I_i = 100 mA P_i = 750 mW	U_n = 30 V I_n = 100 mA
Effective internal capacitance	-	C_i = negligibly small	-
Effective internal inductance	-	L_i = negligibly small	-
• Max. switching voltage AC/DC	250 V/24 V	DC 30 V	DC 30 V
1 fault message output • Digital output: Terminals 31 and 32			
• Connection	On switching amplifier according to EN 60947-5-6: (NAMUR), U_{Aux} = 8.2 V, Ri = 1 kΩ)		
• Signal state High (not triggered)	R = 1.1 kΩ	> 2.1 mA	> 2.1 mA

	Without explosion protection	With explosion protection Ex "ia", "ic"	With explosion protection Ex "ec", "tb"
Mechanic Limit Switches (MLS)	**6DR4004-8K**	**6DR4004-6K**	**6DR4004-6K**
• Signal state Low (triggered)	R = 10 kΩ	< 1.2 mA	< 1.2 mA
• Auxiliary power	U_{Aux} ≤ DC 35 V I ≤ 20 mA	-	-
• Connecting to circuits with the following peak values	-	U_i = 15 V I_i = 25 mA P_i = 64 mW	U_n = 15 V I_n = 25 mA
Effective internal capacitance	-	C_i = 5.2 nF	C_i = 5.2 nF
Effective internal inductance	-	L_i = negligibly small	L_i = negligibly small
Galvanic isolation	The 3 outputs are galvanically isolated from the basic device		
Test voltage	3150 V DC, 2 s		
Rated condition height	Max. 2 000 m above sea level. Use a suitable power supply at an altitude of more than 2 000 m above sea level.	-	-

Certificates and support

A

A.1 Certificates

You can find certificates on the Internet at Certificates (http://www.siemens.com/processinstrumentation/certificates) or on an included DVD.

A.2 Technical support

Technical support

If this documentation does not provide complete answers to any technical questions you may have, contact Technical Support at:

- Support request (http://www.siemens.com/automation/support-request)
- More information about our Technical Support is available at Technical support (http://www.siemens.com/automation/csi/service)

Internet Service & Support

In addition to our documentation, Siemens provides a comprehensive support solution at:

- Service&Support (http://www.siemens.com/automation/service&support)

Personal contact

If you have additional questions about the device, please contact your Siemens personal contact at:

- Partner (http://www.automation.siemens.com/partner)

To find the personal contact for your product, go to "All Products and Branches" and select "Products & Services > Industrial Automation > Process Instrumentation".

Documentation

You can find documentation on various products and systems at:

- Instructions and manuals (http://www.siemens.com/processinstrumentation/documentation)

See also

SIPART PS2 product information (http://www.siemens.com/sipartps2)

E-mail (mailto:support.automation@siemens.com)

Process instrumentation catalog (http://www.siemens.com/processinstrumentation/catalogs)

Accessory part sealing plug / thread adapter

B

B.1 Intended use of accessory part

The sealing plug and the thread adapter (components) can be used for installation in electrical equipment of flameproof" "Ex d" type of protection of groups IIA, IIB, IIC as well as dust protection by enclosure "Ex t" type of protection.

B.2 Safety instructions for accessory part

WARNING

Incorrect assembly

- The component can be damaged or destroyed or its functionality impaired through incorrect assembly.
  - Mount the component using a suitable tool. Refer to the information in Chapter "Technical specifications of accessory part (Page 86)", for example, torques for installation.
- For "Explosion-proof Ex d" type of protection: To ensure an engagement depth of 8 mm, the enclosure must have a wall thickness of at least 10 mm.

Improper modifications

Danger to personnel, system and environment can result from modifications and repairs of the component, particularly in hazardous areas.

- Any modification which deviates from the delivery state is not permitted.

Loss of enclosure type of protection

IP protection is not guaranteed without sealant.

- Use a suitable thread sealant.
- If you are using the component in type of protection dust protection by enclosure "Ex t", use the supplied sealing ring (①, figure in Chapter "Dimensional drawings of accessory part (Page 87)").

Unsuitable fluids in the environment

Danger of injury or damage to device.

Aggressive media in the environment can damage the sealing ring. Type of protection and device protection may no longer be guaranteed.

- Make sure that the sealing material is suitable for the area of use.

Note

Loss of type of protection

Changes in the ambient conditions can loosen the component.

- As part of the recommended maintenance intervals: Check the compression fitting for tight fit and tighten, if necessary.

B.3 Technical specifications of accessory part

Technical specifications sealing plug and thread adapter	
Sealing plug suitable for types of protection	Explosion-proof enclosure "d" of groups IIA, IIB, IIC Dust protection by enclosure "t"
Standard compliance	The components meet Directive 94/9. They meet the requirements of standards IEC/EN 60079-0; IEC/EN 60079-1; IEC/EN 60079-31.
Explosion protection	
• Gas explosion protection	II2G Ex d IIC
• Dust explosion protection	II1D Ex t IIIC
Certificates	IECEx TUN 13.0022 U TÜV 13 ATEX 121710 U
Material for sealing plug / thread adapter	Stainless steel
Material for seal	Vulcanized fiber or Victor Reinz AFM 30
Ambient temperature range	-40 ... +100 °C (-40 ... +212 °F)
For "Ex d" type of protection: Required wall thickness for tappings	10 mm
Torque	
• For thread size M20 x 1.5	65 Nm
• For thread size M25 x 1.5	95 Nm
• For thread size ½-14 NPT	65 Nm
Width A/F for thread size M20 x 1.5	27
Width A/F for thread size M25 x 1.5	30
Key size for thread size ½-14 NPT	10

B.4 Dimensional drawings of accessory part

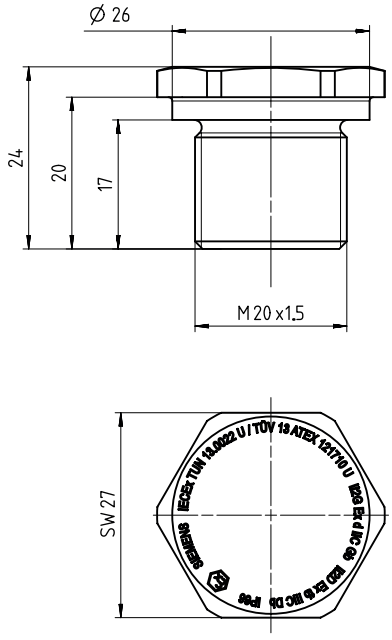

Sealing plug Ex d, M20 x 1.5, dimensions in mm

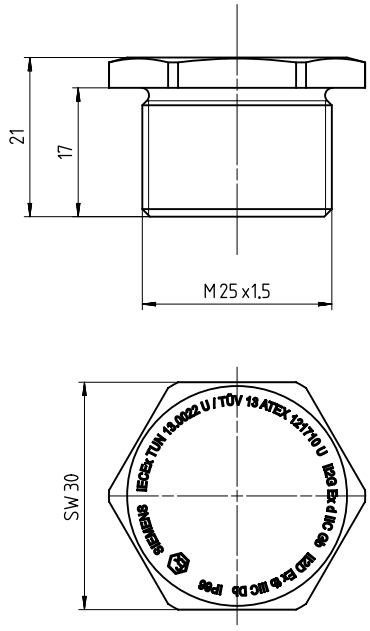

Sealing plug Ex d, M25 x 1.5, dimensions in mm

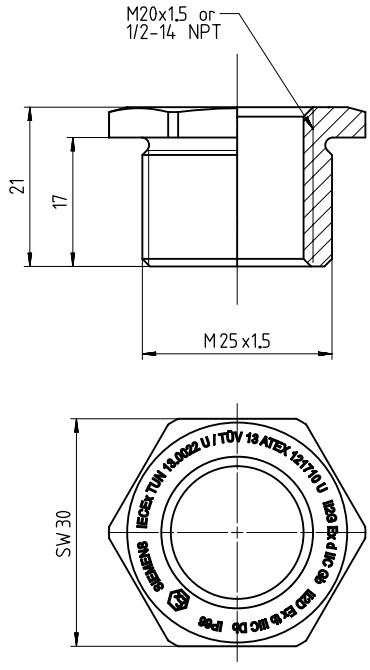

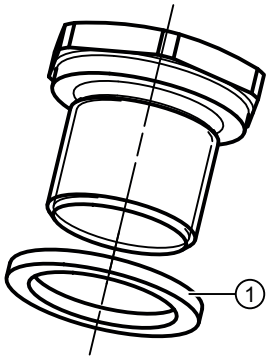

① Sealing ring: Use for dust protection "Ex t" type of protection.

Thread adapter Ex d, M25 x 1.5 on M20 x 1.5 and M25 x 1.5 on ½-14 NPT, dimensions in mm

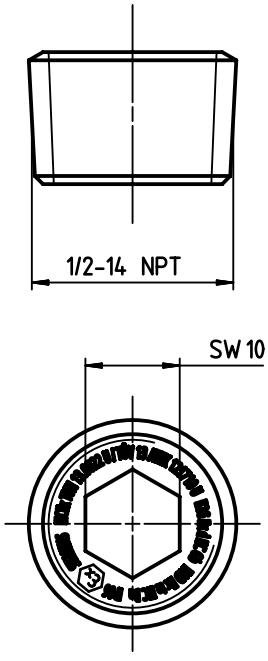

Sealing plug Ex d ½ -14 NPT