SIEMENS

SITRANS F

Electromagnetic flowmeters SITRANS FM MAG 5100 W

Operating Instructions

Introduction 1

Safety notes 2

Description 3

Installing/Mounting 4

Connecting 5

Service and maintenance 6

Diagnostics and Troubleshooting 7

Technical data 8

Product documentation and support A

Appendix B

Certificates and support C

7ME652
7ME658

01/2020
A5E03063678-AC

Legal information

Warning notice system

This manual contains notices you have to observe in order to ensure your personal safety, as well as to prevent damage to property. The notices referring to your personal safety are highlighted in the manual by a safety alert symbol, notices referring only to property damage have no safety alert symbol. These notices shown below are graded according to the degree of danger.

⚠ DANGER
indicates that death or severe personal injury **will** result if proper precautions are not taken.

⚠ WARNING
indicates that death or severe personal injury **may** result if proper precautions are not taken.

⚠ CAUTION
indicates that minor personal injury can result if proper precautions are not taken.

NOTICE
indicates that property damage can result if proper precautions are not taken.

If more than one degree of danger is present, the warning notice representing the highest degree of danger will be used. A notice warning of injury to persons with a safety alert symbol may also include a warning relating to property damage.

Qualified Personnel

The product/system described in this documentation may be operated only by **personnel qualified** for the specific task in accordance with the relevant documentation, in particular its warning notices and safety instructions. Qualified personnel are those who, based on their training and experience, are capable of identifying risks and avoiding potential hazards when working with these products/systems.

Proper use of Siemens products

Note the following:

⚠ WARNING
Siemens products may only be used for the applications described in the catalog and in the relevant technical documentation. If products and components from other manufacturers are used, these must be recommended or approved by Siemens. Proper transport, storage, installation, assembly, commissioning, operation and maintenance are required to ensure that the products operate safely and without any problems. The permissible ambient conditions must be complied with. The information in the relevant documentation must be observed.

Trademarks

All names identified by ® are registered trademarks of Siemens AG. The remaining trademarks in this publication may be trademarks whose use by third parties for their own purposes could violate the rights of the owner.

Disclaimer of Liability

We have reviewed the contents of this publication to ensure consistency with the hardware and software described. Since variance cannot be precluded entirely, we cannot guarantee full consistency. However, the information in this publication is reviewed regularly and any necessary corrections are included in subsequent editions.

Siemens AG
Digital Industries
Postfach 48 48
90026 NÜRNBERG
GERMANY

Document order number: A5E03063678
Ⓟ 02/2020 Subject to change

Copyright © Siemens AG 2020.
All rights reserved

Table of contents

1 Introduction 7
1.1 Purpose of this documentation 7
1.2 Document history 7
1.3 Designated use 7
1.4 Checking the consignment 7
1.5 Items supplied 8
1.6 Industrial use note 8
1.7 Security information 8
1.8 Transportation and storage 9
1.9 Notes on warranty 9
2 Safety notes 11
2.1 Laws and directives 11
2.2 Conformity with European directives 12
2.3 Conformity with PED directive 12
2.4 Installation in hazardous area 15
2.5 Improper device modifications 16
2.6 Custody transfer 16
2.6.1 MI-001 16
2.6.2 PTB K7.2 17
3 Description 19
3.1 System components 19
3.2 Design 20
3.3 Theory of operation 20
4 Installing/Mounting 23
4.1 Installation safety precautions 23
4.2 Determining a location 24
4.3 Orienting the sensor 27
4.4 Mounting 28
4.5 Potential equalization 30
5 Connecting 33
5.1 Remote installation 34
5.2 Installation check 37

5.3 Potting 38
5.4 Direct burial 39
6 Service and maintenance 41
6.1 Maintenance 41
6.2 Verification 41
6.3 Recalibration 43
6.4 Technical support 43
6.5 Transportation and storage 44
6.6 Return procedure 44
6.7 Disposal 45
7 Diagnostics and Troubleshooting 47
7.1 Sensor check 47
7.2 Fluctuating process values 48
8 Technical data 49
8.1 MAG 5100 W 49
8.2 Cable data 53
8.3 Effect of temperature on working pressure 54
8.4 Process fluid conductivity 55
8.5 Liner selection 56
8.6 Electrode selection 56
8.7 Sizing tables 57
8.8 Dimensions and weight 59
A Product documentation and support 65
A.1 Product documentation 65
A.2 Technical support 66
B Appendix 67
B.1 Measuring ranges 67
B.2 Measuring range according to EN1434 (2007) 69
B.3 Flange mating dimensions (metric) 70
B.4 Factory settings 76
B.5 Coil resistance 78
C Certificates and support 81
C.1 Product documentation 81
C.2 Technical support 82
C.3 QR code label 82

Glossary 83
Index 85

Introduction 1

1.1 Purpose of this documentation

These instructions contain all information required to commission and use the device. Read the instructions carefully prior to installation and commissioning. In order to use the device correctly, first review its principle of operation.

The instructions are aimed at persons mechanically installing the device, connecting it electronically, configuring the parameters and commissioning it, as well as service and maintenance engineers.

1.2 Document history

The contents of these instructions are regularly reviewed and corrections are included in subsequent editions. We welcome all suggestions for improvement.

The following table shows the most important changes in the documentation compared to each previous edition.

Edition	Remarks
01/2020	Integration of JIS 10K in 7ME652
09/2018	Updated custody transfer
05/2016	• General update • Updated safety notes • Updated torque values • Updated remote installation • Updated technical data
11/2010	Minor updates
07/2010	First edition Replaces MAG 5100 W part of SITRANS FM Handbook (A5E02435647) and MAG 5100 W instruction (A5E00718677)

1.3 Designated use

Use the device in accordance with the information on the nameplate and in the Technical data (Page 49).

1.4 Checking the consignment

1. Check the packaging and the delivered items for visible damages.
2. Report any claims for damages immediately to the shipping company.

3. Retain damaged parts for clarification.
4. Check the scope of delivery by comparing your order to the shipping documents for correctness and completeness.

⚠ WARNING
Using a damaged or incomplete device Risk of explosion in hazardous areas. • Do not use damaged or incomplete devices.

1.5 Items supplied

- SITRANS FM MAG 5100 W
- Calibration report
- DVD with documentation and cerificates
- Safety Note

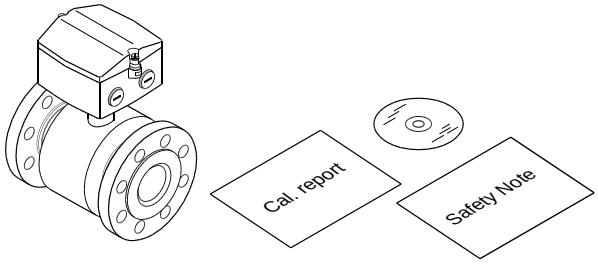

1.6 Industrial use note

NOTICE
Use in a domestic environment This Class A Group 1 equipment is intended for use in industrial areas. In a domestic environment this device may cause radio interference.

1.7 Security information

Siemens provides products and solutions with industrial security functions that support the secure operation of plants, systems, machines and networks.

In order to protect plants, systems, machines and networks against cyber threats, it is necessary to implement – and continuously maintain – a holistic, state-of-the-art industrial security concept. Siemens' products and solutions constitute one element of such a concept.

Customers are responsible for preventing unauthorized access to their plants, systems, machines and networks. Such systems, machines and components should only be connected to an enterprise network or the internet if and to the extent such a connection is necessary and only when appropriate security measures (e.g. firewalls and/or network segmentation) are in place.

For additional information on industrial security measures that may be implemented, please visit
https://www.siemens.com/industrialsecurity.

Siemens' products and solutions undergo continuous development to make them more secure. Siemens strongly recommends that product updates are applied as soon as they are available and that the latest product versions are used. Use of product versions that are no longer supported, and failure to apply the latest updates may increase customer's exposure to cyber threats.

To stay informed about product updates, subscribe to the Siemens Industrial Security RSS Feed under
https://www.siemens.com/industrialsecurity.

1.8 Transportation and storage

To guarantee sufficient protection during transport and storage, observe the following:

- Keep the original packaging for subsequent transportation.
- Devices/replacement parts should be returned in their original packaging.
- If the original packaging is no longer available, ensure that all shipments are properly packaged to provide sufficient protection during transport. Siemens cannot assume liability for any costs associated with transportation damages.

NOTICE
Insufficient protection during storage The packaging only provides limited protection against moisture and infiltration. • Provide additional packaging as necessary.

Special conditions for storage and transportation of the device are listed in Technical data (Page 49).

1.9 Notes on warranty

The contents of this manual shall not become part of or modify any prior or existing agreement, commitment or legal relationship. The sales contract contains all obligations on the part of Siemens as well as the complete and solely applicable warranty conditions. Any statements regarding device versions described in the manual do not create new warranties or modify the existing warranty.

The content reflects the technical status at the time of publishing. Siemens reserves the right to make technical changes in the course of further development.

Safety notes

2

This device left the factory in good working condition. In order to maintain this status and to ensure safe operation of the device, observe these instructions and all the specifications relevant to safety.

Observe the information and symbols on the device. Do not remove any information or symbols from the device. Always keep the information and symbols in a completely legible state.

⚠ CAUTION
Correct, reliable operation of the product requires proper transport, storage, positioning and assembly as well as careful operation and maintenance. Only qualified personnel should install or operate this instrument.

Note

Alterations to the product, including opening or improper modifications of the product are not permitted.

If this requirement is not observed, the CE mark and the manufacturer's warranty will expire.

2.1 Laws and directives

Observe the safety rules, provisions and laws applicable in your country during connection, assembly and operation. These include, for example:

- National Electrical Code (NEC - NFPA 70) (USA)
- Canadian Electrical Code (CEC) (Canada)

Further provisions for hazardous area applications are for example:

- IEC 60079-14 (international)
- EN 60079-14 (EU)

2.2 Conformity with European directives

The CE marking on the device symbolizes the conformity with the following European directives:

Electromagnetic compatibility EMC 2014/30/EU	Directive of the European Parliament and of the Council on the harmonisation of the laws of the Member States relating to electromagnetic compatibility
Low voltage directive LVD 2014/35/EU	Directive of the European Parliament and of the Council on the harmonisation of the laws of the Member States relating to the making available on the market of electrical equipment designed for use within certain voltage limits
Pressure equipment directive PED 2014/68/EU	Directive of the European Parliament and of the Council on the harmonisation of the laws of the Member States relating to the making available on the market of pressure equipment

The applicable directives can be found in the EU declaration of conformity of the specific device.

CE marked equipment

All meters carry either a CE mark or a CE mark followed by eg.200

- CE200: This indicates that the product conforms to:
  - PED 2014/68/EU
  - LVD 2014/35/EU
  - EMC 2014/68/EU
- CE: This indicates that the product conforms to:
  - LVD 2014/35/EU
  - EMC 2014/68/EU

2.3 Conformity with PED directive

Instrument safety standards

The device has been tested at the factory, based on the safety requirements. In order to maintain this condition over the expected life of the device the requirements described in these Operating Instructions must be observed.

NOTICE
Material compatibility Siemens Flow Instruments can provide assistance with the selection of wetted sensor parts. However, the full responsibility for the selection rests with the customer and Siemens Flow Instruments can take no responsibility for any failure due to material incompatibility.

Conformity with PED directive

"Pressure Equipment Directive" (PED) is mandatory for all pressure equipment sold within the EU and EFTA.

Note

Liquids danger group

The device is designed for liquids of danger group "Liquids fluid group 1"

Siemens Flow Instruments products confirm to PED by following the tables below.

Table 2-1 MAG 5100 W (7ME6520)

Flange size		EN 1092-1			AS 4087	ANSI B16,5	AWWA C-207	JIS B 2220:2004
mm	inch	PN 10	PN 16	PN 40	PN 16	150 lb	300 lb	K 10
15	½"	N/A	N/A	SEP	N/A	SEP	N/A	SEP
25	1"	N/A	N/A	SEP	N/A	SEP	N/A	SEP
40	1½"	N/A	N/A	SEP	N/A	SEP	N/A	SEP
50	2"	N/A	SEP	N/A	SEP	SEP	N/A	SEP
65	2½"	N/A	SEP	N/A	SEP	SEP	N/A	SEP
80	3"	N/A	SEP	N/A	SEP	SEP	N/A	SEP
100	4"	N/A	SEP	N/A	SEP	SEP	N/A	SEP
125	5"	N/A	SEP	N/A	N/A	Cat II	N/A	SEP
150	6"	N/A	Cat II	N/A	Cat II	Cat II	N/A	Cat II
200	8"	SEP	Cat II	N/A	Cat II	Cat II	N/A	Cat II
250	10"	Cat I	Cat II	N/A	Cat II	Cat II	N/A	Cat II
300	12"	Cat I	Cat II	N/A	Cat II	Cat II	N/A	Cat II
350	14"	Cat I	Cat II	N/A	Cat II	Cat II	N/A	Cat II
400	16"	Cat I	Cat II	N/A	Cat II	Cat II	N/A	Cat II
450	18"	Cat I	Cat II	N/A	Cat II	Cat II	N/A	Cat II
500	20"	Cat I	Cat II	N/A	Cat II	Cat II	N/A	Cat II
600	24"	Cat I	Cat II	N/A	Cat II	Cat II	N/A	Cat II
700	28"	Cat I	Cat II*	N/A	Cat II	N/A	Cat I	N/A
750	30"	N/A	N/A	N/A	N/A	N/A	Cat I	N/A
800	32"	Cat I	Cat II*	N/A	Cat II	N/A	Cat I	N/A
900	36"	Cat I	Cat II*	N/A	Cat II	N/A	Cat I	N/A
1000	40"	Cat I	Cat II*	N/A	Cat II	N/A	Cat I	N/A
1050	42"	N/A	N/A	N/A	N/A	N/A	Cat I	N/A
1100	44"	N/A	N/A	N/A	N/A	N/A	Cat I	N/A
1200	48"	Cat I	Cat II*	N/A	Cat II	N/A	Cat I	N/A

Table 2-2 MAG 5100 W (7ME6580)

Flange size		EN 1092-1				AS 4087	ANSI B16,5	AWWA C-207	JIS B 2220:2004
mm	inch	PN 6	PN 10	PN 16	PN 40	PN 16	150 lb	300 lb	K 10
15	½"	N/A	N/A	N/A	N/A	N/A	N/A	N/A	N/A
25	1"	N/A	N/A	N/A	SEP	N/A	SEP	N/A	SEP
40	1½"	N/A	N/A	N/A	SEP	N/A	SEP	N/A	SEP
50	2"	N/A	N/A	N/A	SEP	SEP	SEP	N/A	SEP
65	2½"	N/A	N/A	SEP	N/A	SEP	SEP	N/A	SEP
80	3"	N/A	N/A	SEP	N/A	SEP	SEP	N/A	SEP
100	4"	N/A	N/A	SEP	N/A	SEP	SEP	N/A	SEP
125	5"	N/A	N/A	SEP	N/A	N/A	Cat II	N/A	SEP
150	6"	N/A	N/A	Cat II	N/A	Cat II	Cat II	N/A	Cat II
200	8"	N/A	SEP	Cat II	N/A	Cat II	Cat II	N/A	Cat II
250	10"	N/A	Cat I	Cat II	N/A	Cat II	Cat II	N/A	Cat II
300	12"	N/A	Cat I	Cat II	N/A	Cat II	Cat II	N/A	Cat II
350	14"	N/A	Cat I	Cat II	N/A	Cat II	Cat II	N/A	Cat II
400	16"	N/A	Cat I	Cat II	N/A	Cat II	Cat II	N/A	Cat II
450	18"	N/A	Cat I	Cat II	N/A	Cat II	Cat II	N/A	Cat II
500	20"	N/A	Cat I	Cat II	N/A	Cat II	Cat II	N/A	Cat II
600	24"	N/A	Cat I	Cat II	N/A	Cat II	Cat II	N/A	Cat II
700	28"	N/A	Cat I	Cat II*	N/A	Cat II	N/A	Cat I	N/A
750	30"	N/A	N/A	N/A	N/A	N/A	N/A	Cat I	N/A
800	32"	N/A	Cat I	Cat II*	N/A	Cat II	N/A	Cat I	N/A
900	36"	N/A	Cat I	Cat II*	N/A	Cat II	N/A	Cat I	N/A
1000	40"	N/A	Cat I	Cat II*	N/A	Cat II	N/A	Cat I	N/A
1050	42"	N/A	N/A	N/A	N/A	N/A	N/A	Cat I	N/A
1100	44"	N/A	N/A	N/A	N/A	N/A	N/A	Cat I	N/A
1200	48"	N/A	Cat I	Cat II*	N/A	Cat II	N/A	Cat I	N/A
1400	54"	Cat I	Cat I	Cat II*	N/A	N/A	N/A	Cat I	N/A
1500	60"	Cat I	Cat I	Cat II*	N/A	N/A	N/A	Cat I	N/A
1600	66"	Cat I	Cat I	Cat II*	N/A	N/A	N/A	Cat I	N/A
1800	72"	Cat I	Cat I	Cat II*	N/A	N/A	N/A	Cat I	N/A
2000	78"	Cat I	Cat I	Cat II*	N/A	N/A	N/A	Cat I	N/A

The key to the tables is as follows:

Table 2-3 Table key

Cat I	Product covered by PED Cat I and only available as fully PED conforming
Cat II	Product covered by PED Cat II and only available as fully PED conforming
Cat II*	Product covered by PED Cat II but available as non-conforming to PED
SEP	Excluded from PED under Sound Engineering Practice

2.4 Installation in hazardous area

WARNING

Equipment used in hazardous locations

Equipment used in hazardous locations must be Ex-approved for the region of installation and marked accordingly. It is required that the special conditions for safe use provided in the manual and in the Ex certificate are followed!

Hazardous area approvals

The device is approved for use in hazardous area and has the following approvals:

- MAG 5100 W DN 15 to 1200: FM / CSA Class I, Div. 2

WARNING

Suitable hazardous area approval

Make sure the hazardous area approval is suitable for the environment in which the device will be installed.

WARNING

All approvals are based on non-flammable processes only!

WARNING

Potential equalization

In operation, the output is earthed through the conductive medium being measured and therefore potential equalisation is necessary throughout the hazardous area.

The apparatus housing shall be connected to the potential equalising conductor in the hazardous area.

WARNING

Laying of cables

Cables for use in hazardous area must satisfy the requirements for having a proof voltage < AC 500 V applied between the conductor/ground, conductor/shield and shield/ground.

Connect the devices that are operated in hazardous areas as per the stipulations applicable in the country of operation.

2.5 Improper device modifications

WARNING

Improper device modifications

Risk to personnel, system and environment can result from modifications to the device, particularly in hazardous areas.

- Only carry out modifications that are described in the instructions for the device. Failure to observe this requirement cancels the manufacturer's warranty and the product approvals.

2.6 Custody transfer

MAG 5100W (7ME652) is approved for custody transfer.

2.6.1 MI-001

The MAG 5100 W MI-001 verified and labeled products are a Class II approval according to Directive 2014/32/EU of the European Parliament and Council of 26 February, 2014 on measuring instruments, Annex VI Thermal Energy Meters (MI-004) in the sizes from DN 50 to DN 1200 (Article No. 7ME6520). The MID certification is obtained as a modul B + D module approval according to the above mentioned directive. Module B : Type approval according to OIML R 49 Module D : Quality insurance approval of production.

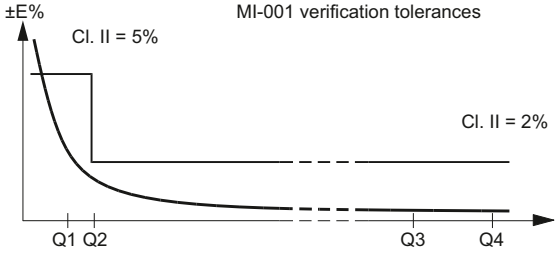

Figure 2-1 MI-001 verification tolerances

MI-001 approval is valid for:

- DN 50 to 1200 mm (2" to 48")
- Horizontal and vertical installation
- Compact or remote with max. 500 m cable
- Power supply 115 to 230 V AC, 12 to 24 V AC/DC

Other restrictions may apply (see certificate).

Special label is required for MI-001 approved meters. An example of the product label is shown below:

Figure 2-2 Nameplate MAG 6000, 5100 W

MAG 5100 W (7ME6520) MI-001 is verified and labeled at a given Q3 and Q3/Q4 = 1.25 and Q2/Q1 = 1.6 measuring ranges see appendix Measuring ranges (Page 67)

2.6.2 PTB K7.2

MAG 5000/6000 CT together with MAG 5100W (7ME652) are approved for PTB K7.2 under the following installation conditions:

- DN 50 to 300 mm (2" to 12")
- Horizontal installation
- Compact or remote with max. 10 m (33 ft.) cable

Other restrictions may apply (see certificate 22.76/10.02)

Measuring range according to EN1434 (2007), see appendix Measuring range according to EN1434 (2007) (Page 69)

Installation conditions

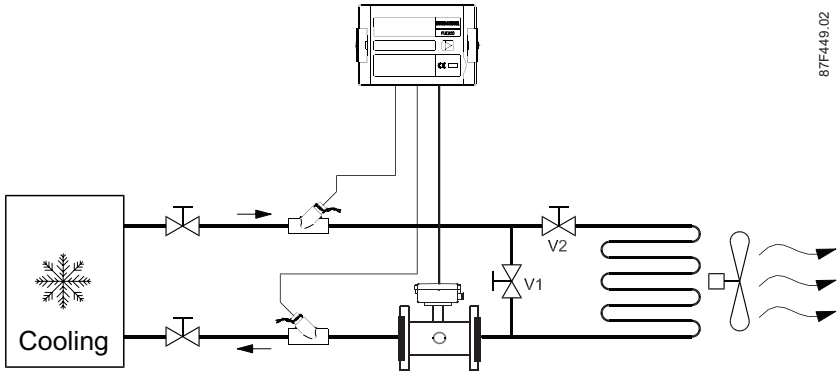

Description 3

The main applications of the SITRANS F M electromagnetic flow sensors can be found in the following fields:

- Process industry
- Chemical industry
- Steel industry
- Mining
- Utility
- Power generation & distribution
- Oil & gas / HPI
- Water & waste water
- Pulp & paper

3.1 System components

The SITRANS FM flowmeter system includes:

- Transmitter (types: SITRANS FM MAG 5000/6000 or MAG 6000 I)
- Sensor (types: SITRANS FM MAG 1100/1100 F, MAG 3100/3100 P or MAG 5100 W)
- Communication module (optional) (types: HART, PROFIBUS PA/DP, MODBUS RTU RS 485, Foundation Fieldbus H1, Devicenet)
- SENSORPROM memory unit

Communication solutions

The SITRANS FM range of add-on modules, presently including HART, Foundation Fieldbus. MODBUS RTU RS 485, PROFIBUS PA / DP and Devicenet, are all applicable with the SITRANS FM MAG 6000 transmitter.

3.2 Design

The SITRANS FM MAG 5100 W is an electromagnetic flow sensor designed to meet the requirements in ground water, drinking water, waste water, sewage or sludge applications. With its coned design, increased low-flow accuracy is achieved making it especially useful for leak detection. It is suitable for direct burial and constant flooding. MAG 5100 W complies with drinking water and custody transfer approvals.

MAG 5100W DN15 to 40

MAG 5100W DN50 to 300 (7ME6520)

MAG 5100W DN350 to 1200 (7ME6520)

MAG 5100W DN25 to 2000 (7ME6580)

MAG 5100W compact installation with MAG 5000/6000 IP67

MAG 5100W compact installation with MAG 6000 I

The sensors carry a wide range of approvals, see Technical data (Page 49).

3.3 Theory of operation

The flow measuring principle is based on Faraday's law of electromagnetic induction.

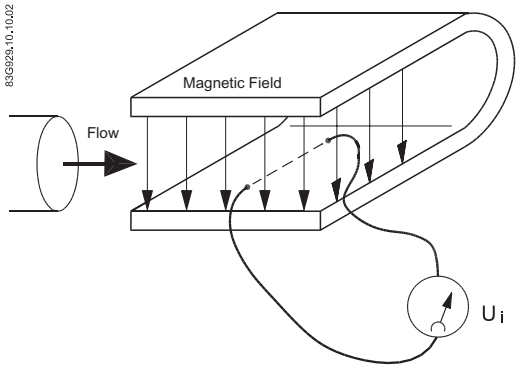

U_i = When an electrical conductor of length L is moved at velocity v, perpendicular to the lines of flux through a magnetic field of strength B, the voltage U_i is induced at the ends of the conductor

U_i = L x B x v

- U_i = Induced voltage
- L = Conductor length = Inner pipe diameter = k_1
- B = Magnetic field strength = k_2
- v = Velocity of conductor (media)
- k = k_1 x k_2

U_i = k x v, the electrode signal is directly proportional to the fluid velocity

Operating principle

The coil current module generates a pulsating magnetizing current that drives the coils in the sensor. The current is permanently monitored and corrected. Errors or cable faults are registered by the self-monitoring circuit.

The input circuit amplifies the flow-proportional induced voltage signal from the electrodes. The input impedance is extremely high: >10^{14} Ω which allows flow measurements on fluids with conductivities as low as 5 µS/cm. Measuring errors due to cable capacitance are eliminated due to active cable screening.

The digital signal processor converts the analog flow signal to a digital signal and suppresses electrode noise through a digital filter. Inaccuracies in the transmitter as a result of long-term drift and temperature drift are monitored and continuously compensated for via the self-monitoring circuit. The analog to digital conversion takes place in an ultra low noise ASIC with 23 bit signal resolution. This has eliminated the need for range switching. The dynamic range of the transmitter is therefore unsurpassed with a turn down ratio of minimum 3000:1.

Installing/Mounting

4

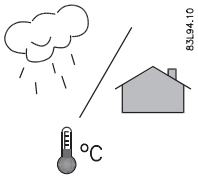

SITRANS F flowmeters with minimum IP65/NEMA 4X enclosure rating are suitable for indoor and outdoor installations.

- Make sure that pressure and temperature specifications indicated on the device nameplate / label will not be exceeded.

WARNING

Installation in hazardous location

Special requirements apply to the location and interconnection of sensor and transmitter. See Installation in hazardous area (Page 15)

4.1 Installation safety precautions

WARNING

High pressure hazard

In applications with working pressures/media that can be dangerous to people, surroundings, equipment or others in case of pipe fracture, we recommend that special precautions such as special placement, shielding or installation of a pressure guard or a safety valve are taken when the flowmeter is mounted.

Note

Install the sensor in well-supported pipelines in order to support the weight of the flowmeter.

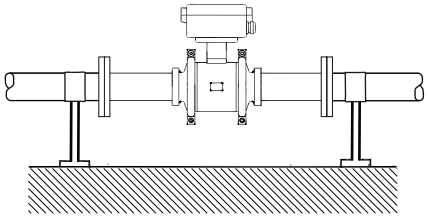

Vibrations

Avoid strong vibrations.

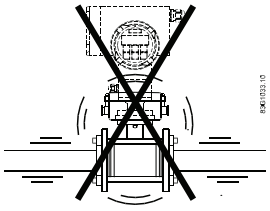

Figure 4-1 Avoid vibrations

CAUTION

In applications with strong vibrations, Siemens recommends remote mounting of the transmitter!

4.2 Determining a location

Note

The sensor must always be completely filled with liquid.

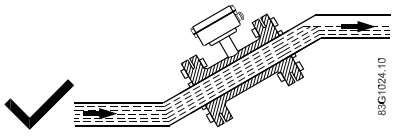

Figure 4-2 Correct installation with filled pipes

- Avoid the following installations
  - Installation at the highest point in the pipe system
  - Installation in vertical pipes with free outlet

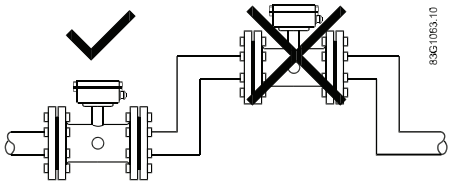

Figure 4-3 Wrong installation at high point

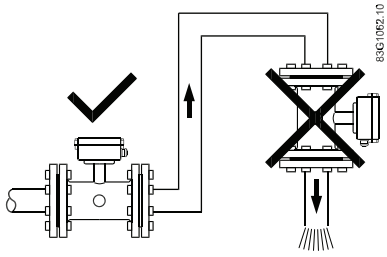

Figure 4-4 Correct installation at low point before outlet

Inlet and outlet conditions

To achieve accurate flow measurement it is essential to have straight lengths of inlet and outlet pipes and a certain distance to pumps and valves.

It is also important to centre the flowmeter in relation to pipe flanges and gaskets.

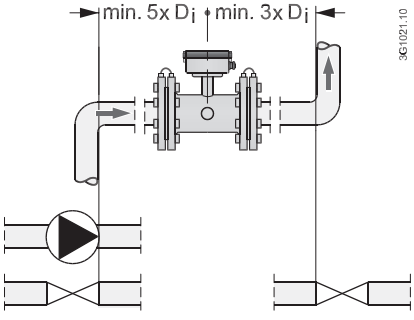

Figure 4-5 Inlet and outlet conditions

Note

MI-001 approved with OD inlet and 0D outlet conditions

Installation in partially filled pipes

For partially filled pipes or pipes with downward flow and free outlet the flowmeter should be located in a U-tube.

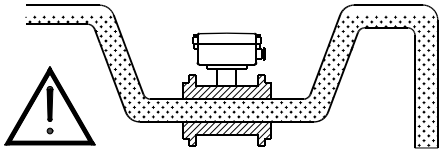

Installation in large pipes

The flowmeter can be installed between two reducers (for example DIN 28545). At α ≤ 8° the following pressure drop curves apply. The curves are applicable to water.

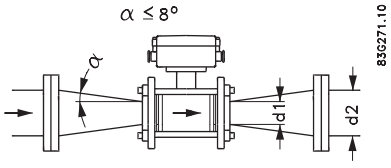

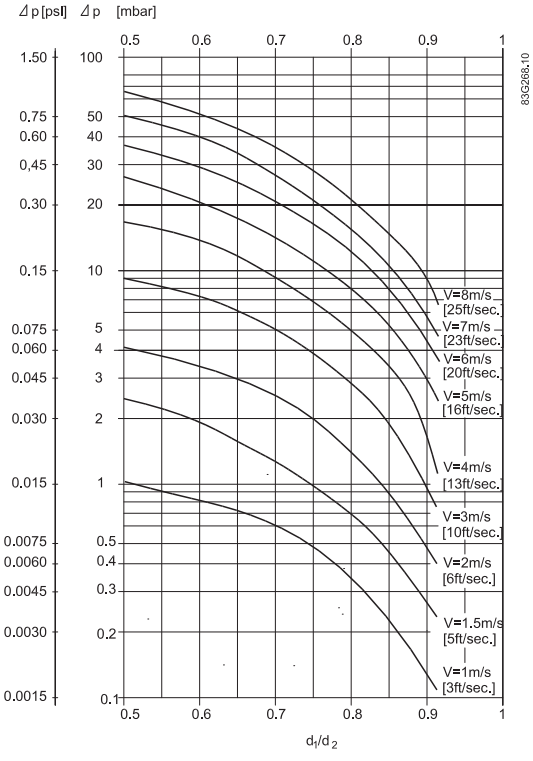

Example:

A flow of 3 m/s (v) in a sensor with a diameter reduction from DN 100 to DN 80 (d_1/d_2 = 0.8) gives a pressure drop of 2.9 mbar.

4.3 Orienting the sensor

The sensor operates in all orientations, but Siemens has the following recommendations:

- Vertical installation with an upwards flow

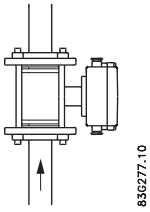

Figure 4-6 Vertical orientation, upwards flow

NOTICE
Abrasive liquids / liquids containing solid particles A vertical installation minimizes wear and deposits in the sensor

Note

Gas/air bubbles in the liquid

A vertical installation minimizes any negative effect of gas/air bubbles in the liquid

- Horizontal installation, terminal box upwards or downwards

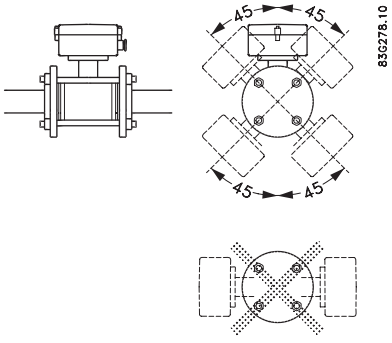

Figure 4-7 Horizontal installation, various terminal box positions

NOTICE
Do NOT mount the sensor with the terminal box sideways This will position the electrodes at the top where there is possibility for air bubbles and at the bottom where there is possibility for mud, sludge, sand etc.

Note

Empty pipe detection

For applications with empty pipe detection, the sensor can be tilted 45°, as shown above.

4.4 Mounting

- Install the sensor in rigid pipelines in order to support the weight of the meter.
- Center the connecting pipelines axially in order to avoid turbulent flow profiles.
- Use proper gaskets according to liner type (not included).

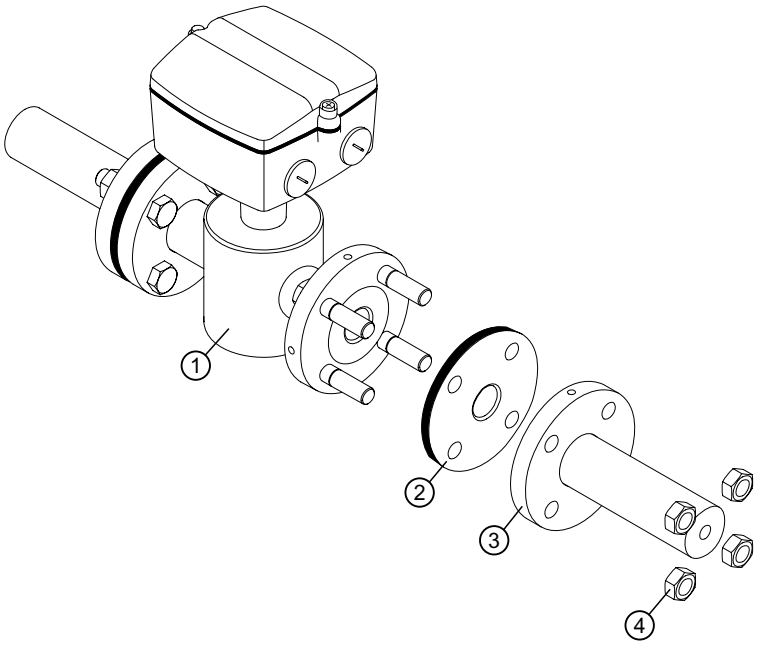

① Sensor
② Gasket
③ Process connection
④ Nuts

Tightening

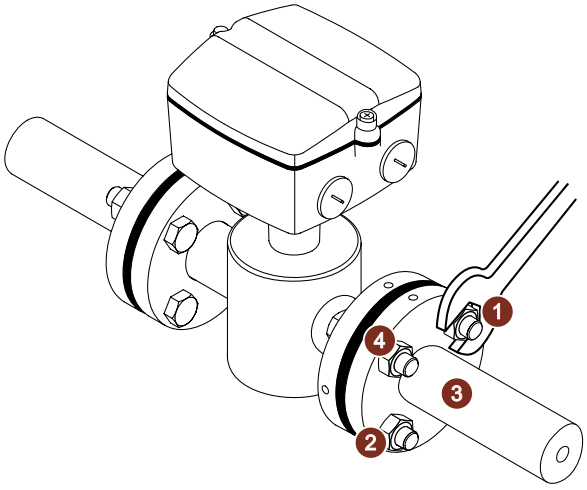

1. Cross-tighten the bolts in the shown sequence.
2. Fasten bolts according to the torques values below.

Note

Torque values are calculated on the basis of use of gaskets.

Table 4-1 Maximum allowable torques

DN		PN 6		PN 10		PN 16		PN 40		Class 150		AWWA C-207		AS 16		JIS10K	
mm	inch	Nm	F/lbs	Nm	F/lbs	Nm	F/lbs	Nm	F/lbs	Nm	F/lbs	Nm	F/lbs	Nm	F/lbs	Nm	F/lbs
15	½	N/A	N/A	N/A	N/A	N/A	N/A	10	7	6	5	N/A	N/A	N/A	N/A	6	5
25	1	N/A	N/A	N/A	N/A	N/A	N/A	10	7	7	5	N/A	N/A	N/A	N/A	7	5
40	1½	N/A	N/A	N/A	N/A	N/A	N/A	16	12	9	7	N/A	N/A	N/A	N/A	9	7
50	2	N/A	N/A	N/A	N/A	25	18	34	25	25	18	N/A	N/A	25	18	25	18
65	2½	N/A	N/A	N/A	N/A	25	18	N/A	N/A	25	18	N/A	N/A	25	18	25	18
80	3	N/A	N/A	N/A	N/A	25	18	N/A	N/A	34	25	N/A	N/A	25	18	25	18
100	4	N/A	N/A	N/A	N/A	25	18	N/A	N/A	26	19	N/A	N/A	25	18	25	18
125	5	N/A	N/A	N/A	N/A	32	24	N/A	N/A	42	31	N/A	N/A	N/A	N/A	32	24
150	6	N/A	N/A	N/A	N/A	50	37	N/A	N/A	57	42	N/A	N/A	50	37	50	37
200	8	N/A	N/A	50	37	52	38	N/A	N/A	88	65	N/A	N/A	52	38	50	37
250	10	N/A	N/A	50	37	88	65	N/A	N/A	99	73	N/A	N/A	88	65	50	37
300	12	N/A	N/A	57	42	117	86	N/A	N/A	132	97	N/A	N/A	117	86	57	42
350	14	N/A	N/A	60	44	120	89	N/A	N/A	225	166	N/A	N/A	120	89	60	44
400	16	N/A	N/A	88	65	170	125	N/A	N/A	210	155	N/A	N/A	170	125	88	65
450	18	N/A	N/A	92	68	170	125	N/A	N/A	220	162	N/A	N/A	170	125	92	68
500	20	N/A	N/A	103	76	230	170	N/A	N/A	200	148	N/A	N/A	230	170	103	76
600	24	N/A	N/A	161	119	350	258	N/A	N/A	280	207	N/A	N/A	350	258	161	119
700	28	N/A	N/A	200	148	304	224	N/A	N/A	N/A	N/A	200	148	304	224	N/A	N/A
750	30	N/A	N/A	N/A	N/A	N/A	N/A	N/A	N/A	N/A	N/A	240	177	N/A	N/A	N/A	N/A
800	32	N/A	N/A	274	202	386	285	N/A	N/A	N/A	N/A	260	192	386	285	N/A	N/A
900	36	N/A	N/A	288	213	408	301	N/A	N/A	N/A	N/A	240	177	408	301	N/A	N/A
1000	40	N/A	N/A	382	282	546	403	N/A	N/A	N/A	N/A	280	207	546	403	N/A	N/A
1050	42	N/A	N/A	N/A	N/A	N/A	N/A	N/A	N/A	N/A	N/A	280	207	N/A	N/A	N/A	N/A
1100	44	N/A	N/A	N/A	N/A	N/A	N/A	N/A	N/A	N/A	N/A	290	214	N/A	N/A	N/A	N/A
1200	48	N/A	N/A	395	292	731	539	N/A	N/A	N/A	N/A	310	229	731	539	N/A	N/A
1400	54	330	244	503	317	736	543	N/A	N/A	N/A	N/A	528	389	N/A	N/A	N/A	N/A
1600	66	355	262	590	435	840	620	N/A	N/A	N/A	N/A	698	515	N/A	N/A	N/A	N/A
1800	72	380	280	684	505	913	674	N/A	N/A	N/A	N/A	698	515	N/A	N/A	N/A	N/A
2000	78	382	282	771	569	937	692	N/A	N/A	N/A	N/A	700	516	N/A	N/A	N/A	N/A

Torque calculations

All values are theoretical and are calculated making the following assumptions:

1. All bolts are new and material selection is according to EN 1515-1 table 2.
2. Gasket material not exceeding 75 shore A durometer is used between the flowmeter and mating flanges.
3. All bolts are galvanized and adequately lubricated.
4. The values are calculated for use with carbon steel flanges.
5. Flowmeter and mating flanges are correctly aligned.

4.5 Potential equalization

To obtain optimum results from the measuring system, the sensor must have the same electrical potential as the liquid being measured.

This is achieved by means of built-in grounding electrodes.

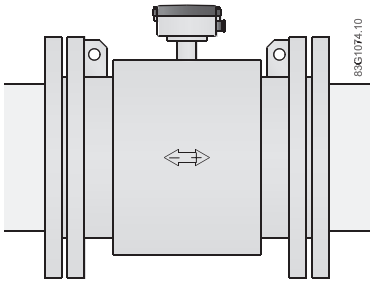

Figure 4-8 Potential equalization with earthing electrodes

Cathodic protected piping

Special attention must be paid to systems with cathodic protection.

⚠ WARNING
Use in hazardous area!
Cathodic pipe protection is not allowed in hazardous areas

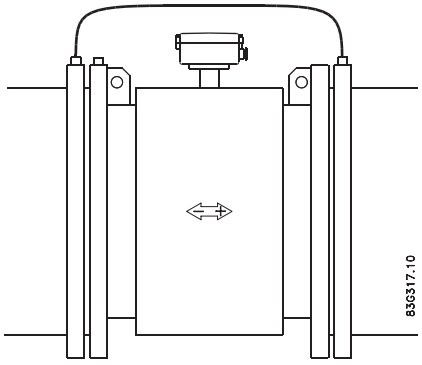

Figure 4-9 Cathodic protection

- Isolate the sensor from cathodic protected pipes using insulated bolts.
- Use bypass cable between the mating flanges

Note

Remote mounted sensor versions

If the above is not acceptable, remote mounted sensors can alternatively be connected as follows:

- Connect coil current cable shield at sensor end via a 1.5 µF condensator
- Make sure that electrode cable shield is not connected at both ends

Connecting 5

The following contains a short description of how to connect a remote mounted sensor to a transmitter type SITRANS FM MAG 5000 / 6000 or MAG 6000 I. For more information, e.g. about wiring of power supply and outputs, refer to the Operating Instructions for the respective transmitters.

Before connecting

- Check that serial numbers on sensor and SENSORPROM® unit are identical.

WARNING

The pertinent regulations must be observed for electrical installation.

- Never install the device with the mains voltage switched on!
- Danger of electric shock!
- The electrodes and magnetic current line may only be connected when the device is not connected to the power supply.
- If the housing is under voltage (power supply), the cover may be unscrewed by qualified personnel only.

WARNING

Mains supply from building installation Class II

A switch or circuit breaker (max. 15 A) must be installed in close proximity to the equipment and within easy reach of the operator. It must be marked as the disconnecting device for the equipment.

Cable specifications

- Only use cables with at least the same degree of protection as the sensor to install the sensor.
- The line length from the cable gland to the terminals must be kept as short as possible. Line loops in the terminal box must be avoided.
- To guarantee the IP67 degree of protection, use cables with the required specifications.

WARNING

Protective conductor terminal

The required cable is min. AGW16 or 1.5 mm^2 Cu.

WARNING

Wire insulation

For field wiring installation: Ensure that the national requirements of the country in which the flowmeters are installed is met.

See also

Cable data (Page 53)

5.1 Remote installation

Note

Remote installation only

The following applies to remote installation of MAG 5000 / 6000 or MAG 6000 I.

1. Unscrew and remove terminal box lid.

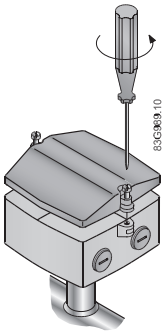

2. Mount the two terminal blocks as shown and insert electrode cable plug ① (terminals 82, 0 and 83) and coil cable plug ② (terminals 85 and 86).
   Terminals electrode cable: 82, 0 and 83
   Terminals special electrode cable: 84, 83, 0, 82 and 81
   Terminals coil cable: 85; 86

   Note

   Special electrode cable

   Special electrode cable must be connected to terminals 84, 83, 0, 82 and 81.

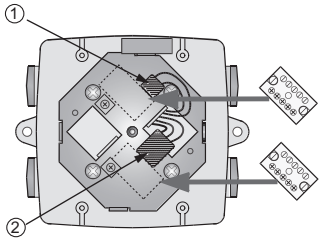

Figure 5-1 Terminal box without blocks

3. Remove SENSORPROM® unit from sensor and mount it on connection plate in transmitter, see relevant transmitter operating instructions.

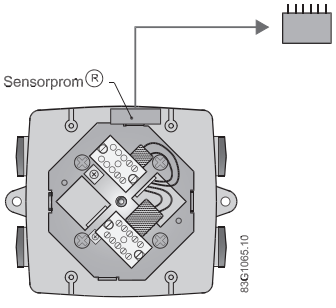

4. Fit the ½" NPT or M20 cable glands for supply and output cables.

5. Fit and connect electrode and coil cables as shown below.

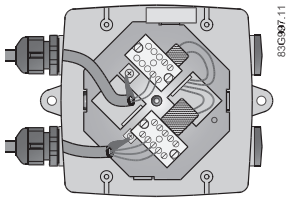

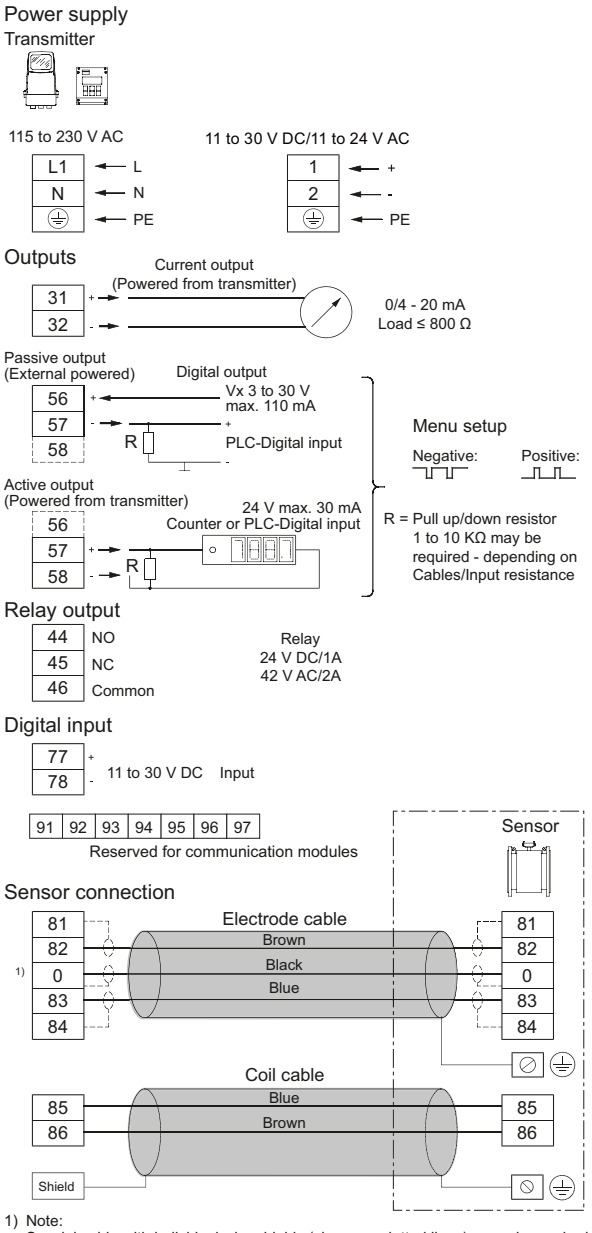

1) Note:
Special cable with individual wire shields (shown as dotted lines) are only required when using empty pipe function or long cables.

CAUTION

Unscreened cable ends

Keep unscreened cable ends as short as possible.

CAUTION

Prevent interference

Separate electrode and coil cables to prevent interference.

WARNING

Use in hazardous area

Connect mains protective earth to the PE terminal in accordance with the above diagram in order to obtain potential equalization.

6. Tighten cable glands well to obtain optimum sealing. The cable entry gasket must obtain firm contact with the cable.

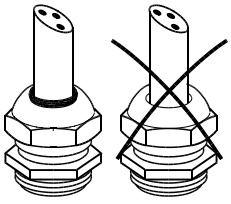

7. Remount terminal box lid.

Note

Tightening torque

Tighten the bolts with 0.5 Nm.

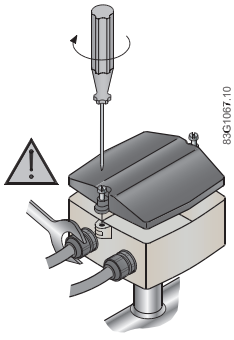

5.2 Installation check

The meter is now ready to go into normal operation - for commissioning and setting of parameters refer to the relevant transmitter manual.

Before commissioning it must be checked that:

- The device has been installed and connected in accordance with the guidelines provided previous in this chapter and in Installing/Mounting (Page 23).

5.3 Potting

If sensor is buried or permanently submerged, terminal box must be encapsulated with silicon dielectric gel (non-toxic, transparent and self-healing gel).

NOTICE
Electrical connections Do **not** pot meter before electrical connections have been made.

- Mix the two components of the potting kit well and pour into terminal box.
- Let cure for approximately 24 hours at approximately 25°C (77°F). Curing time increases by 100% per -10°C (-18°F).

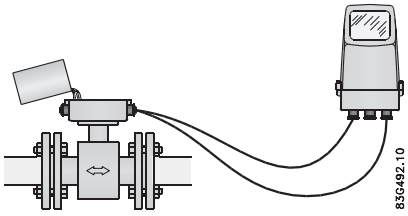

Horizontal orientation

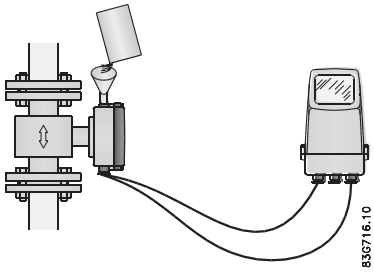

Vertical orientation

Note

Gel can be penetrated with test instruments or be removed in case of cable replacement.

5.4 Direct burial

Recommendations for direct burial of remote sensor:

- Check for visible damages in paint finish !
- Use protection conduit !
- Protect sensor with pea gravel at least 300 mm around sensor. This provides some drainage and also avoids caking sensor with earth. It also helps to locate sensor in case excavation takes place.

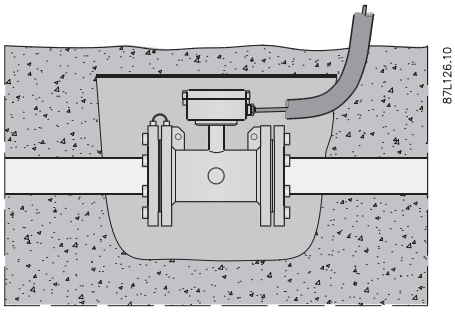

Figure 5-2 Direct burial of sensor

CAUTION

Sensor should not be subject to heavy vehicles applying excessive weight above sensor or pipeline

NOTICE

SENSORPROM memory unit

Remove the SENSORPROM from terminal box on sensor and relocate in remote transmitter prior to burying sensor.

All sensor data plate information and serial number should be recorded for each sensor prior to burying. This will ensure correct matching with SENSORPROM unit.

WARNING

Electrical cable identification

Use suitable coil and electrode cables

Lay electrical cable identification tape above pea gravel before it is covered with earth.

Service and maintenance 6

6.1 Maintenance

The device is maintenance-free. However, a periodic inspection according to pertinent directives and regulations must be carried out.

An inspection can include check of:

- Ambient conditions
- Seal integrity of the process connections, cable entries, and cover screws
- Reliability of power supply, lightning protection, and grounds

NOTICE
Repair and service must be carried out by Siemens authorized personnel only.

Note

Siemens defines flow sensors as non-repairable products.

6.2 Verification

With the SITRANS FM Verificator It is possible to validate the product, installation and application without interrupting the process. The verification consists of the following test routines:

- Insulation test of the entire flowmeter system and cables
- Test of sensor magnetic properties
- Transmitter gain, linearity and start of scale value test
- Digital output test
- Analog output test

The Verificator can be used for SITRANS FM flowmeters with sensor types MAG 1100, MAG 1100 F, MAG 3100, MAG 3100 P and MAG 5100 W connected to transmitters MAG 5000 or MAG 6000.

When connected to a PC, you can print a full verification report containing all test results.

SIEMENS **MAGFLO Verification Certificate**

Customer:

Name
Address
Phone
Email

MAGFLO Identification:

TAG No./Name	0
Sensor Code No.	7ME65202YC122A
Sensor Serial No.	101902H441
Transmitter Code No.	7ME692
Transmitter Serial No.	062830N231
Location	

Results:

Verification file name or No.		File #1
Transmitter		Passed
Sensor	Insulation	Passed
	Magnetic Circuit	Passed

Velocity	Current Output			Frequency Output		
Theoretical	Theoretical	Actual	Deviation	Theoretical	Actual	Deviation
0,5m/s	4,800mA	4,800mA	-0,05%	0,500kHz	0,498kHz	-0,32%
1,0m/s	5,600mA	5,596mA	-0,26%	1,000kHz	0,996kHz	-0,37%
3,0m/s	8,800mA	8,794mA	-0,12%	3,000kHz	2,997kHz	-0,09%
	Current Output 4-20mA			Frequency Output 0-10kHz		

Transmitter Settings:

Basic	Qmax.	20,0000 m³ /h
	Flow Direction	Positive
	Low flow Cut-off	1,50%
	Empty Pipe	ON
Output	Current Output	ON (4-20mA)
	Time Constant	5,0 Sec.
	Relay Output	Error Level
	Digital Output	Pulse
	Frequency Range	N/A
	Time Constant	N/A
	Volume/pulse	10,0 l/p
	Pulse width	0,066 sec.
	Pulse polarity	Positiv
Totalizer 1 value before test		114,69851 l
Totalizer 1 value after test		130,3003 l
Totalizer 2 value before test		5,98203 l
Totalizer 2 value after test		8,95478 l
Operating time in days		245

Sensor Details:

Size	DN 50 2 IN
Cal. Factor	1,79904997
Correction Factor	1,0
Excitation Freq.	3,125Hz

Verificator Details (083F5060)

Serial No.	010116N258
Device No.	83948
Software Version	1.40
PC-Software Version	5.01
Cal. date	2017.04.20
ReCal. date	2018.04.20

Comments

These tests verify that the flowmeter is functioning within 2% deviation of the original test parameters.
Verification is traceable to National and International Standards.

Date and signature

2017.05.24 B. Andersen

Figure 6-1 Example of a verification certificate

6.3 Recalibration

Siemens Process Instrumentation offers to recalibrate the sensor. The following calibration types are offered as standard:

- Standard matched pair calibration
- Customer-specified calibration
- Accredited Siemens ISO/IEC 17025 calibration

Note

For recalibration the SENSORPROM unit must always be returned with the sensor.

6.4 Technical support

If you have any technical questions about the device described in these Operating Instructions and do not find the right answers, you can contact Customer Support:

- Via the Internet using the **Support Request:**
  Support request (http://www.siemens.com/automation/support-request)
- Via Phone:
  - Europe: +49 (0)911 895 7222
  - America: +1 423 262 5710
  - Asia-Pacific: +86 10 6475 7575

Further information about our technical support is available on the Internet at
Technical support (http://support.automation.siemens.com/WW/view/en/16604318)

Service & Support on the Internet

In addition to our documentation, we offer a comprehensive knowledge base online on the Internet at:

Service and support (http://www.siemens.com/automation/service&support)

There you will find:

- The latest product information, FAQs, downloads, tips and tricks.
- Our newsletter, providing you with the latest information about your products.
- Our bulletin board, where users and specialists share their knowledge worldwide.
- You can find your local contact partner for Industry Automation and Drives Technologies in our partner database.
- Information about field service, repairs, spare parts and lots more under **Services**.

Additional Support

If you have additional questions about the device, please contact your local Siemens representative and offices at:

Local contact person (http://www.automation.siemens.com/partner)

6.5 Transportation and storage

To guarantee sufficient protection during transport and storage, observe the following:

- Keep the original packaging for subsequent transportation.
- Devices/replacement parts should be returned in their original packaging.
- If the original packaging is no longer available, ensure that all shipments are properly packaged to provide sufficient protection during transport. Siemens cannot assume liability for any costs associated with transportation damages.

NOTICE
Insufficient protection during storage The packaging only provides limited protection against moisture and infiltration. • Provide additional packaging as necessary.

Special conditions for storage and transportation of the device are listed in Technical data (Page 49).

Handling

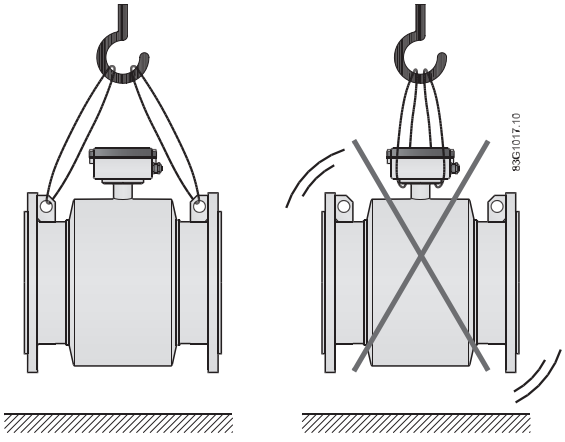

Figure 6-2 Handling of sensor

6.6 Return procedure

Enclose the bill of lading, return document and decontamination certificate in a clear plastic pouch and attach it firmly to the outside of the packaging.

Required forms

- Delivery note
- Return goods delivery note (http://www.siemens.com/processinstrumentation/returngoodsnote)
  with the following information:
  - Product (item description)
  - Number of returned devices/replacement parts
  - Reason for returning the item(s)
- Decontamination declaration (http://www.siemens.com/sc/declarationofdecontamination)
  With this declaration you warrant "that the device/replacement part has been carefully cleaned and is free of residues. The device/replacement part does not pose a hazard for humans and the environment."
  If the returned device/replacement part has come into contact with poisonous, corrosive, flammable or water-contaminating substances, you must thoroughly clean and decontaminate the device/replacement part before returning it in order to ensure that all hollow areas are free from hazardous substances. Check the item after it has been cleaned. Any devices/replacement parts returned without a decontamination declaration will be cleaned at your expense before further processing.

6.7 Disposal

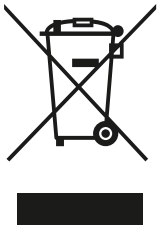

Devices described in this manual should be recycled. They may not be disposed of in the municipal waste disposal services according to the Directive 2012/19/EC on waste electronic and electrical equipment (WEEE).

Devices can be returned to the supplier within the EC, or to a locally approved disposal service for eco-friendly recycling. Observe the specific regulations valid in your country.

Further information about devices containing batteries can be found at: Information about battery / product return (WEEE) (https://support.industry.siemens.com/cs/document/109479891/)

Diagnostics and Troubleshooting 7

7.1 Sensor check

Requirement

To check the SITRANS FM sensors the following test instruments will be required:

- Digital Meter/Multimeter
- Megger
- (Moving Coil Meter)

Sensor check

Remove the transmitter from the sensor or remote position before making the following checks.

Coil resistance check

- Measure the coil resistance between connection numbers 85 and 86 using a digital meter. Resistance should be within range stated in Coil resistance table.

A low reading may indicate moisture within the coil housing or shorted coil tums.

A high reading would indicate an open circuit coil.

Note

In case of deviation from nominal coil values, the sensor is damaged and must be replaced

Coil insulation check

WARNING

Potential hazard!

Only carry our a coil insulation check in non-hazardous area!

- Megger between connection number 85 and the sensor body.
  The resistance should be above 20 MΩ.

A low megger reading would indicate the coil insulation is breaking down. This is normally due to fluid ingress into the coil housing.

Sensors with an insulation resistance down to 1 MΩ may still work satisfactorily but this is not guaranteed.

Electrode resistance check

- Measure the electrode resistance between connections 82 and 0 with a moving coil meter. With a sensor full of fluid the resistance should be between 5 KΩ and 50 KΩ. If the sensor is empty the resistance will be infinite.
- Repeat the resistance measurements between connections 83 and 0. The results should be the same.

If the resistance is low there may be a short on the electrodes or wiring (in the case of a remote mounted transmitter). Alternatively there may be water ingress or moisture in the terminal box.

If the resistance is high and the pipe is completely full of fluid check the following:

1. Fluid is electrically conductive.
2. Electrodes are not coated with grease or any deposit.
3. Electrode circuit is not open.
4. Remote mounted transmitter has a 3 core cable with an overall shield continuously from sensor to transmitter, including junction boxes and terminal rails inside panels.
5. Shield is connected to 0 or to earth terminal (PE) on sensor.

Note

Sensors removed from line

For sensors removed from line with dry bore, use megger between terminal 82 and compression plate, and 83 and compression plate to show any water ingress behind electrodes or within enclosure.

7.2 Fluctuating process values

Question

Why do the displayed process values fluctuate when the electrode cable is moved?

Answer

There can be several causes for fluctuating process values:

- Deposits on electrodes
  - Clean the electrodes.
- Defect electrode cable
  - Replace the cable
- Incorrect cable connection
  - Connect the electrode cable (82, 83, 0 and shield) according to the instructions in Remote installation (Page 34)

Technical data

8

8.1 MAG 5100 W

Table 8-1 Technical data

Version	MAG 5100W (7ME6520)	MAG 5100W (7ME6580)
Product characteristic	Mainly for the European market EPDM or NBR lining	Mainly for the non-European market Ebonite lining
Design and nominal size	*Coned sensor:* • DN 15 to 300 (½" to 12") *Full bore sensor:* • DN 350 to 1200 (14" to 48")	*Full bore sensor:* • DN 25 to 2000 (1" to 78")
Measuring principle	Electromagnetic induction	
Excitation frequency (Mains supply: 50 Hz/60 Hz)	*DN 15 to 65 (½" to 2½"):* • 12.5 Hz / 15 Hz *DN 80 to 150 (3" to 6"):* • 6.25 Hz / 7.5 Hz *DN 200 to 300 (8" to 12"):* • 3.125 Hz / 3.75 Hz *DN 350 to 1200 (14" to 48"):* • 1.5625 Hz / 1.875 Hz	*DN 25 to 65 (1" to 2½"):* • 12.5 Hz / 15 Hz *DN 80 to 150 (3" to 6"):* • 6.25 Hz / 7.5 Hz *DN 200 to 1200 (8" to 48"):* • 3.125 Hz / 3.75 Hz *DN 1400 to 2000 (54" to 78"):* • 1.5625 Hz / 1.875 Hz

Table 8-2 Process connections

Version	MAG 5100W (7ME6520)	MAG 5100W (7ME6580)
EN 1092-1	*PN 10 (145 psi):* • DN 200 to 300 (8" to 12") Flat face flanges *PN 10 (145 psi):* • DN 350 to 1200 (14" to 48") Raised face flanges *PN 16 (232 psi):* • DN 50 to 300 (2" to 12") Flat face flanges *PN 16 (232 psi):* • DN 350 to 1200 (14" to 48") Raised face flanges *PN 40 (580 psi):* • DN 15 to 40 (½" to 1½") Flat face flanges	Raised face (EN 1092-1, DIN 3501 and BS4504 have the same mating dimensions) PN 16 (87 psi): • DN 1400 to 2000 (54" to 78") PN 10 (145 psi): • DN 200 to 2000 (8" to 78") PN16 (232 psi): • DN 65 to 600 (2½" to 24") PN 40 (580 psi): • DN 25 to 50 (1" to 2")
ANSI B16.5	Class 150 lb: ½" to 24"	Class 150 lb: 1" to 24"
AWWA C-207	Class D: • 28" to 48", Flat face flanges	Class D: • 28" to 78", Flat face flanges
AS4087	*PN 16 (230 psi):* • DN 50 to 1200 (2" to 48")	*PN 16 (230 psi):* • DN 50 to 1200 (2" to 48")
JIS B 2220:2004	K10 (1" to 24")	K10 (1" to 24")

Table 8-3 Rated operating conditions

Version	MAG 5100W (7ME6520)	MAG 5100W (7ME6580)
Ambient temperature • Sensor	-40 to +70 °C (-40 to +158 °F)	-40 to +70 °C (-40 to +158 °F)
• With compact transmitter		
MAG 5000/6000 [2]	-20 to +60 °C (-4 to +140 °F)	-20 to +60 °C (-4 to +140 °F)
MAG 6000 I	-20 to +60 °C (-4 to +140 °F)	-20 to +60 °C (-4 to +140 °F)
Operating pressure [abs. bar][1]	DN 15 to 40 (½" to 1½") 0.01 to 40 bar (0.15 to 580 psi) DN 50 to 300 (2" to 12")[3] 0.03 to 20 bar (0.44 to 290 psi) DN 350 to 1200 (14" to 48") 0.01 to 16 bar (0.15 to 232 psi)	DN 25 to 50 (1" to 2") 0.01 to 40 bar (0.15 to 580 psi) DN 65 to 1200 (2½" to 48") 0.01 to 16 bar (0.15 to 232 psi) DN 1400 to 2000 (54" to 78") 0.01 to 10 bar (0.15 to 145 psi)
Enclosure rating		
Standard	IP67 to EN 60529 / NEMA 4X/6 (1 mH_2O for 30 minutes)	IP67 to EN 60529 / NEMA 4X/6 (1 mH_2O for 30 minutes)
Option	IP68 to EN 60529 / NEMA 6P (10 mH_2O continuously)	IP68 to EN 60529 / NEMA 6P (10 mH_2O continuously)
Corrosive category	C4 according to ISO 12944-2	C4 according to ISO 12944-2

Version	MAG 5100W (7ME6520)	MAG 5100W (7ME6580)
Pressure drop	DN 15 and 25 (½" and 1"): • Max. 20 mbar (0.29 psi) at 1 m/s (3 ft/s) DN 40 to 300 (1½" to 12"): • Max. 25 mbar (0.36 psi) at 3 m/s (10ft/s) DN 350 to 1200 (14" to 48"): • Insginificant	Insignificant
Test pressure	1.5 x PN (where applicable)	1.5 x PN (where applicable)
Mechanical load (vibration)	18 to 1000 Hz random in x,y, z directions for 2 hours according to EN 60068-2-36 Sensor: 3.17 grms Sensor with compact MAG 5000/6000 transmittter mounted: 3.17 grms Sensor with compact MAG 6000 I transmitter mounted: 1.14 grms	18 to 1000 Hz random in x,y, z directions for 2 hours according to EN 60068-2-36 Sensor: 3.17 grms Sensor with compact MAG 5000/6000 transmittter mounted: 3.17 grms Sensor with compact MAG 6000 I transmitter mounted: 1.14 grms
Process fluid temperature		
NBR	-10 to +70 °C (14 to 158 °F)	-
EPDM	-10 to +70 °C (14 to 158 °F)	-
EPDM (MI-001)	+0.1 to +30 °C (32 to 76 °F)	-
EPDM (PTB K 7.2)	+0.1 to +50 °C (32 to 122 °F)	-
Ebonite	-	-10 to +70 °C (14 to 158 °F)
EMC	EMC 2004/108/EC	EMC 2004/108/EC

1) Maximum operating pressure decreases with increasing operating temperature

2) MAG 5000/6000 CT -20 to +50 °C (-4 to +122 °F)

3) For PTB K7.2 DN50 to 150: 0.03 to 16 bar DN200 to 300: 0.03 to 10 bar or 0.03 to 16 bar

Table 8-4 Design

Version	MAG 5100W (7ME6520)	MAG 5100W (7ME6580)
Housing and flange material	Carbon steel, with corrosion-resistant two-component epoxy coating (min. 150 µm) Corrosive category C4, according to ISO 12944-2	Carbon steel ASTM A 105, with corrosion-resistant two-component epoxy coating (min. 150 µm)
Measuring pipe	AISI 304 (1.4301)	AISI 304 (1.4301)
Electrodes	Hastelloy	Hastelloy
Grounding electrodes (standard	Hastelloy	Hastelloy
Terminal box	Fibre glass reinforced polyamide	Fibre glass reinforced polyamide

Table 8-5 Certificates and approvals

Version	MAG 5100W (7ME6520)	MAG 5100W (7ME6580)
Calibration Standard production calibration, calibration report shipped with sensor	Zero-point, 2 x 25 % and 2 x 90 %	Zero-point, 2 x 25 % and 2 x 90 %
Custody transfer (only with MAG 5000/6000 CT)	*OIML R 49 pattern approval cold water (Denmark and Germany):* • DN 50 to 1200 (2" to 48") *MI 001 cold water (EU):* • DN 50 to 300 (2" to 12") *MPTB K7.2 Energy metering:* • DN 50 to 300 (2" to 12")	-
Drinking water approvals	*EPDM liner:* • ANSI/NSF 61 Standard (Cold water, US) • WRAS (WRc, BS6920 cold water, GB) • ACS (F) • DVGW W270 (D) • Belgaqua (NBR) *NBR liner:* • ANSI/NSF 61 Standard (Cold water, US), only ANSI and AWWA flanges)	• NSF/ANSI Standard 61 (Cold water, US) • WRAS (WRc, BS6920 cold water, GB)
Other approvals	• MCERTS • PED - 97/23 EC[1)] • CRN • VdS: Extinguishing systems DN 50 to 300 • FM Fire Service Meter (Class Number 1044) DN 50, DN 80, DN 100, DN 150, DN 200, DN 250, DN 300 (2", 3", 4", 6", 8", 10", 12") • CSA Class 1, Div 2	• PED - 97/23 EC[1)] (only < DN 600 (< 24")) • FM Class 1, Div 2 • CSA Class 1, Div 2

[1)] : For sizes larger than 600 mm (24") in PN 16, PED conformity is available as cost-added option. The basic unit will carry the LVD (Low Voltage Directive) and EMC approval.

8.2 Cable data

Description

Cable for standard electrode or coil	
Electrode cable, double shielded	
Cable kit with standard coil cable and electrode cable double shielded (also available as low noise cable for MAG 1100 sensor)	

Standard applications

Table 8-6 Technical data, standard application cables

		Coil cable	Standard electrode cable
Basic data	No. of conductors	2	3
	Min. sqr. area	0.5 mm^2	0.2 mm^2
	Shield	Yes	Yes
	Max. capacitance	N/A	350 pF/m
Max. cable loop resistance	Media temperature:		
	< 100 °C (212 °F)	40 Ω	N/A
	> 200 °C (392 °F)	6 Ω	N/A
Cable glands on sensor and transmitter	M20x1.5 gland - Cable ø 5 to 13 mm (0.20 to 0.51 inches)		
	½ NPT gland - cable ø 5 to 9 mm (0.20 to 0.35 inches)		

Special applications, for example low conductivity or electrical noise

Table 8-7 Technical data, special application cables

		Coil cable	Special electrode cable
Basic data	No. of conductors	3	3
	Sqr. area	1.5 mm^2	0.25 mm^2
	Shield	Yes	Double
	Color code	Brown, blue, black	Brown, blue, black
	Outside color	Grey	Grey
	Ext. diameter	7.8 mm	8.1 mm
	Conductor	Flexible CU	Flexible CU
	Isolation material	PVC	PVC
Ambient temperature	Flexible installation	-5 to +70°C (23 to 158°F)	-5 to +70°C (23 to 158°F)
	Non-flexible installtaion	-30 to +70°C (-22 to 158°F)	-30 to +70°C (-22 to 158°F)

		Coil cable	Special electrode cable
Cable parameter	Capacity	161.50 pF/m	N/A
	Inductance	0.583 µH/m	N/A
	L/R	43.83 þH/Ω	N/A

8.3 Effect of temperature on working pressure

Effect of temperature on working pressure.

Table 8-8 Metric measures (pressure in bar)

Flange specifications	Flange rating	Temperature (°C)			
		-5	10	50	90
Sizes DN25 to 2000					
EN 1092-1	PN 10	10.0	10.0	9.7	9.4
	PN 16	16.0	16.0	15.5	15.1
	PN 40	40.0	40.0	38.7	37.7
ANSI B16.5	150 lb	19.7	19.7	19.3	18.0
AWWA C-207	Class D	10.3	10.3	10.3	10.3
AS		16.0	16.0	15.5	15.1
JIS	10K	14.0	14.0	14.0	14.0
Sizes DN 15 to 300 (order no. 7ME6520 only)					
EN 1092-1	PN 10	10.0	10.0	10.0	8.2
	PN 16	10.0	16.0	16.0	13.2
	PN 40	40.0	40.0	38.7	37.7
ANSI B16.5	150 lb	10.0	19.7	19.7	16.2
AS		16.0	16.0	16.0	13.2
JIS		14.0	14.0	14.0	

Table 8-9 Imperial measures (pressure in psi)

Flange specifications	Flange rating	Temperature (°F)			
		23	50	120	200
Sizes 1" to 78"					
EN 1092-1	PN 10	145	145	141	136
	PN 16	232	232	225	219
	PN 40	580	580	561	547
ANSI B16.5	150 lb	286	286	280	261
AWWA C-207	Class D	150	150	150	150
Sizes ½" to 12" (order no. 7ME6520 only)					
EN 1092-1	PN 10	145	145	145	119
	PN 16	145	232	232	191
ANSI B16.5	150 lb	145	286	286	235

8.4 Process fluid conductivity

Compact installation

Liquids with an electrical conductivity ≥ 5 µS/cm.

Remote installation

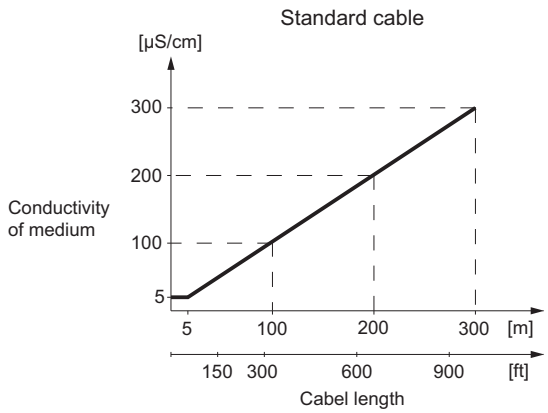

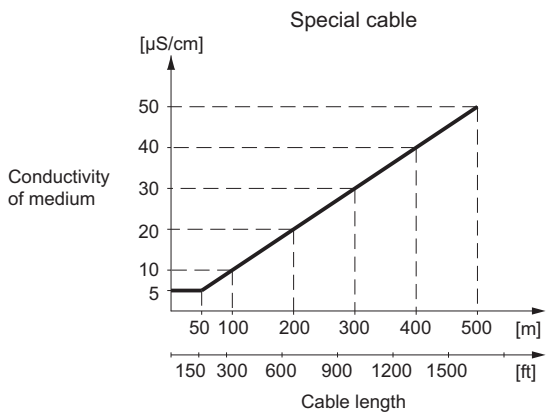

WARNING

For detection of empty sensor the min. conductivity must always be >50 µS/cm and the max. length of the electrode cable when remote mounted is 50 meters (164 ft). Special cable must be used!

For remote MID installations the max. cable length is 3 meters (9.8 ft). For other CT application standard requirements are applicable.

8.5 Liner selection

Liner	Applications
EPDM	Drinking water applications (not hydrocarbons)
Ebonite	Drinking water applications wastewater applications and certain chemicals applications
NBR	General purpose. Drinking water, sea waters

8.6 Electrode selection

Electrodes	
Hastelloy C	The preferred choice for water and wastewater, chemicals, food and beverage, and pharmaceutical industries

8.7 Sizing tables

Sizing table (DN 2 to DN 2000)

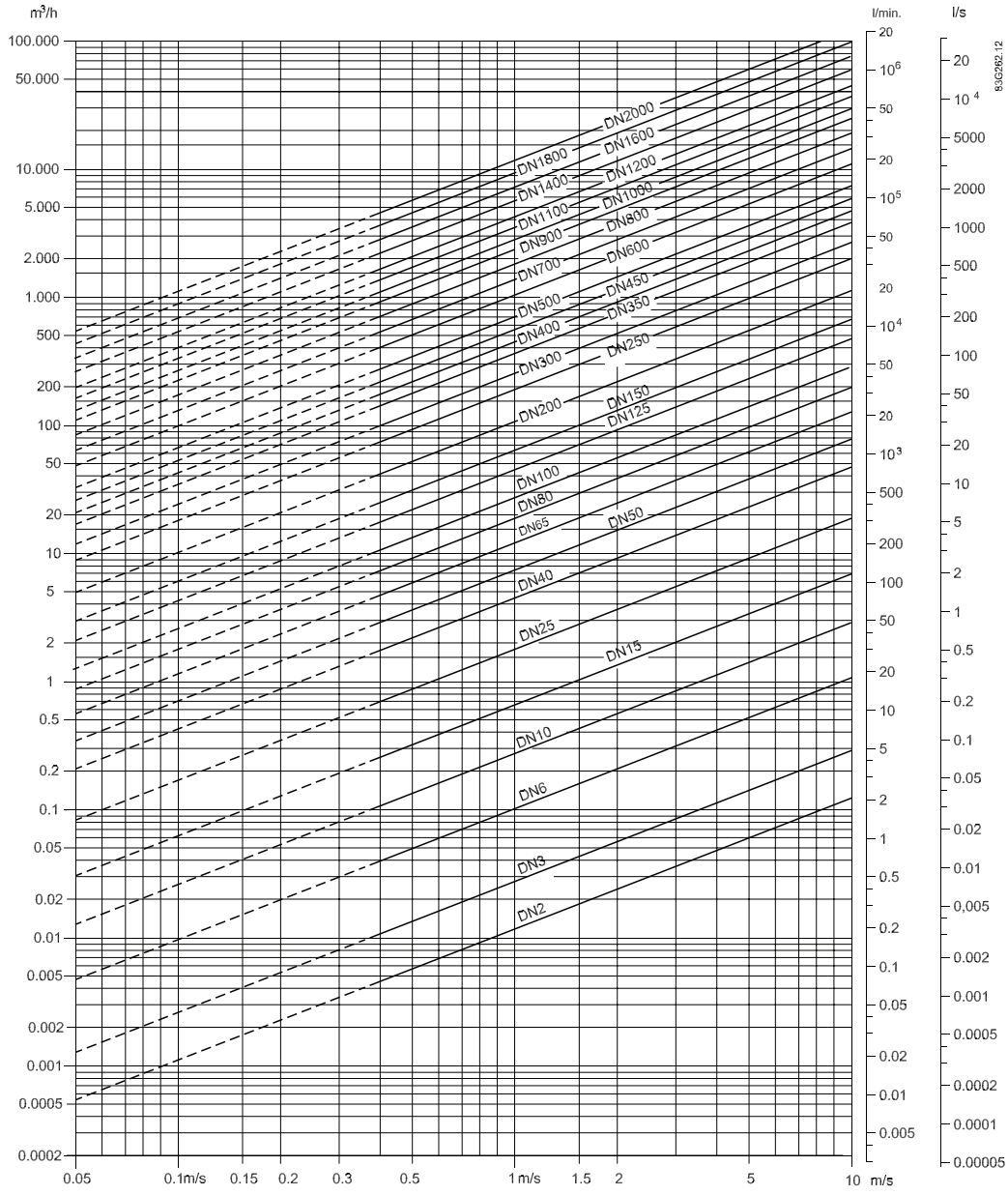

Sizing table (DN $^{1}/_{12}$" to DN 78")

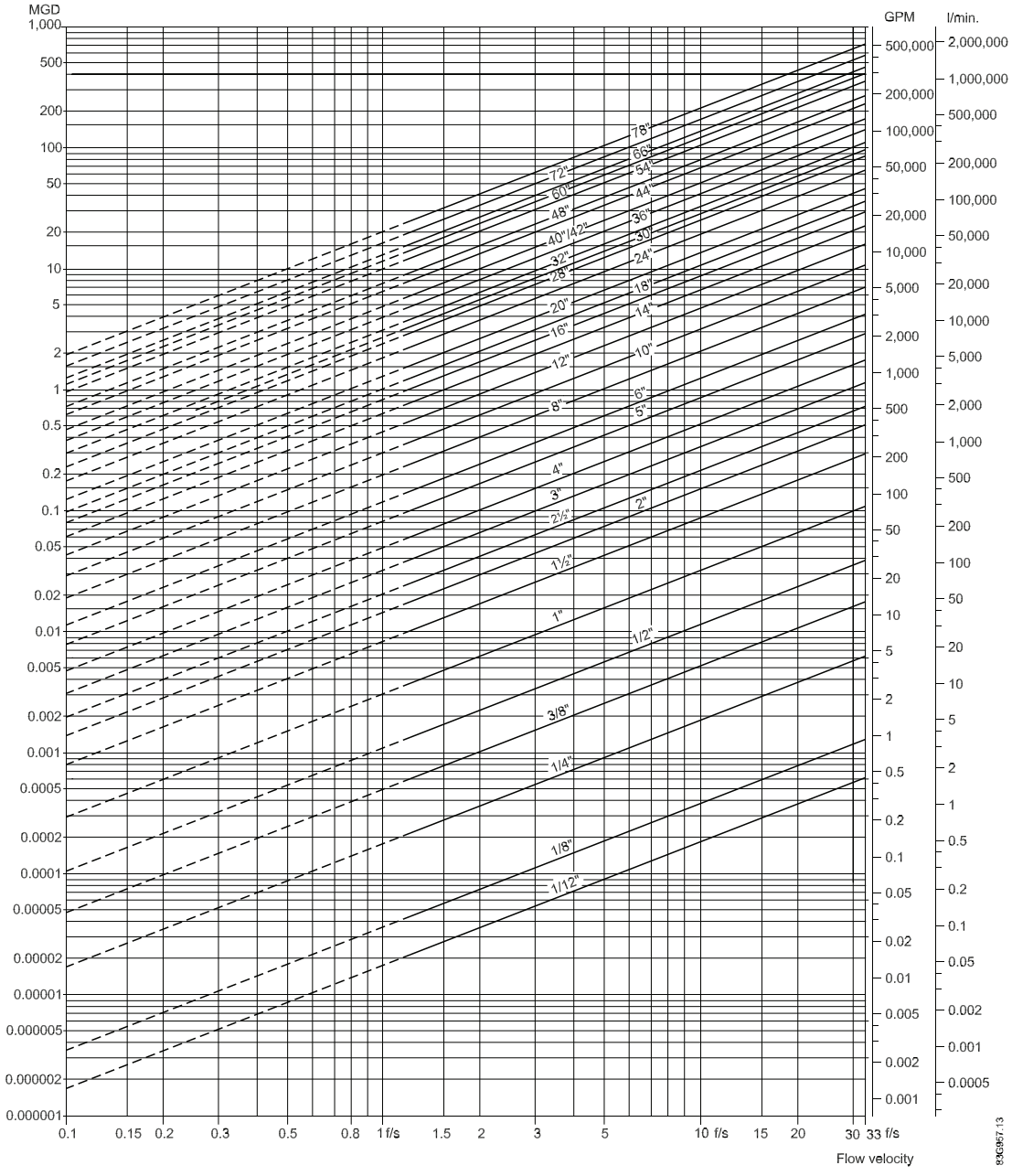

The tables show the relationship between flow velocity v, flow quantity Q and sensor dimension DN.

Guidelines for selection of sensor

Min. measuring range: 0 to 0.25 m/s (0 to 0.8 ft/s)

Max. measuring range: 0 to 10 m/s (0 to ft/s)

Normally the sensor size is selected so that the nominal flow velocity v lies within the measuring range 1 to 3 m/s (1 to 15 ft/s).

Flow velocity calculation formula:

(metric measures)

$$V = \frac{1273.24 \times Q\,[l/s]}{DN^2\,[mm]}\ [m/s] \text{ or } V = \frac{353.68 \times Q\,[m^3/h]}{DN^2\,[mm]}\ [m/s]$$

(imperial measures)

$$V = \frac{0.408 \times Q\,[GPM]}{(\text{Pipe ID})^2\,[inch]}\ [ft/s] \text{ or } V = \frac{283.67 \times Q\,[MGD]}{(\text{Pipe ID})^2\,[inch]}\ [ft/s]$$

8.8 Dimensions and weight

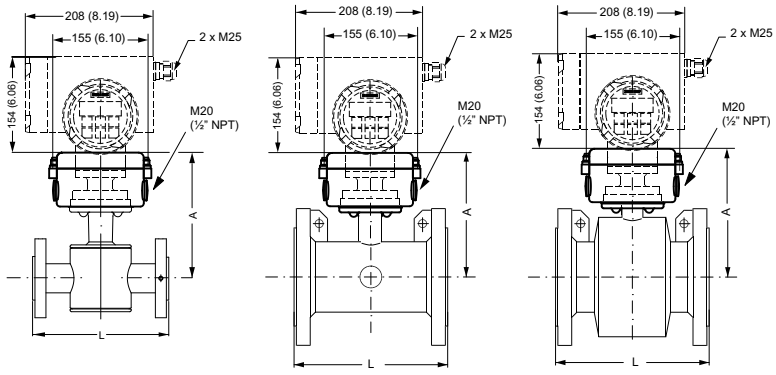

Figure 8-1 MAG 5100 W with MAG 6000 I / MAG 6000 I Ex d

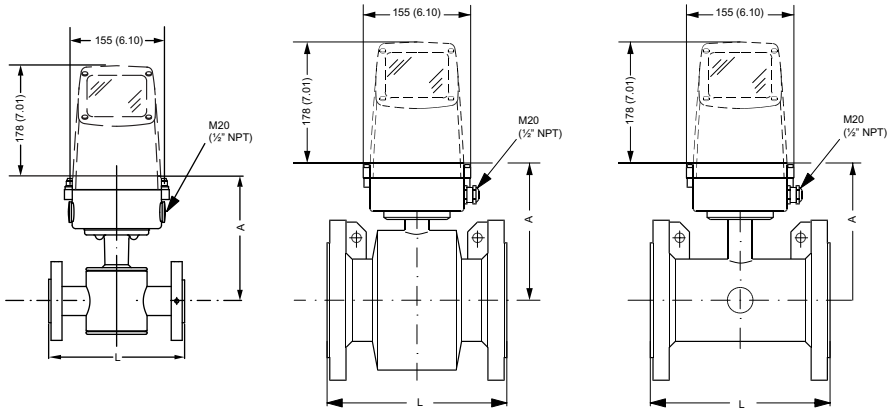

Figure 8-2 MAG 5100 W with MAG 5000 / 6000

Dimensions

Table 8-10 Nominal size A

Nominal size		A			
		Order no. 7ME6520 NBR or EPDM liner		Order no. 7ME6580 Ebonite liner	
mm	inch	mm	inch	mm	inch
15	½	177	7	-	-
25	1	187	7.4	187	7.4
40	1½	202	8	197	7.8
50	2	188	7.4	205	8.1
65	2½	194	7.6	212	8.3
80	3	200	7.9	222	8.7
100	4	207	8.1	242	9.5
125	5	217	8.5	255	10.0
150	6	232	9.1	276	10.9
200	8	257	10.1	304	12.0
250	10	284	11.2	332	13.1
300	12	310	12.2	357	14.1
350	14	382	15.0	362	14.3
400	16	407	16.0	387	15.2
450	18	438	17.2	418	16.5
500	20	463	18.2	443	17.4
600	24	514	20.2	494	19.4
700	28	564	22.2	544	21.4
750	30	591	23.3	571	22.5
800	32	616	24.3	606	23.9
900	36	663	26.1	653	25.7
1000	40	714	28.1	704	27.7
1050	42	714	28.1	704	27.7
1100	44	765	30.1	755	29.7
1200	48	820	32.3	810	31.9
1400	54	N/A	N/A	925	36.4
1500	60	N/A	N/A	972	38.2
1600	66	N/A	N/A	1025	40.4
1800	72	N/A	N/A	1123	44.2
2000	78	N/A	N/A	1223	48.1

Table 8-11 Nominal size L for 7ME6520

Nominal size		L													
		PN 10		PN 16[1)]		PN 40		Class 150		AWWA C-207		AS 16		JIS10K	
mm	inch	mm	inch	mm	inch	mm	inch	mm	inch	mm	inch	mm	inch	mm	inch
15	½	N/A	N/A	N/A	N/A	200	7.9	200	7.9	N/A	N/A	N/A	N/A	200	7.9
25	1	N/A	N/A	N/A	N/A	200	7.9	200	7.9	N/A	N/A	N/A	N/A	200	7.9
40	1½	N/A	N/A	N/A	N/A	200	7.9	200	7.9	N/A	N/A	N/A	N/A	200	7.9
50	2	N/A	N/A	200	7.9	N/A	N/A	200	7.9	N/A	N/A	200	7.9	200	7.9
65	2½	N/A	N/A	200	7.9	N/A	N/A	200	7.9	N/A	N/A	200	7.9	200	7.9
80	3	N/A	N/A	200	7.9	N/A	N/A	200	7.9	N/A	N/A	200	7.9	200	7.9
100	4	N/A	N/A	250	9.8	N/A	N/A	250	9.8	N/A	N/A	250	9.8	250	9.8
125	5	N/A	N/A	250	9.8	N/A	N/A	250	9.8	N/A	N/A	N/A	N/A	250	9.8
150	6	N/A	N/A	300	11.8	N/A	N/A	300	11.8	N/A	N/A	300	11.8	300	11.8
200	8	350	13.8	350	13.8	N/A	N/A	350	13.8	N/A	N/A	350	13.8	350	13.8
250	10	450	17.7	450	17.7	N/A	N/A	450	17.7	N/A	N/A	450	17.7	450	17.7
300	12	500	19.7	500	19.7	N/A	N/A	500	19.7	N/A	N/A	500	19.7	500	19.7
350	14	550	21.7	550	21.7	N/A	N/A	550	21.7	N/A	N/A	550	21.7	550	21.7
400	16	600	23.6	600	23.6	N/A	N/A	600	23.6	N/A	N/A	600	23.6	600	23.6
450	18	600	23.6	600	23.6	N/A	N/A	600	23.6	N/A	N/A	600	23.6	600	23.6
500	20	600	23.6	600	23.6	N/A	N/A	600	23.6	N/A	N/A	600	23.6	600	23.6
600	24	600	23.6	600	23.6	N/A	N/A	600	23.6	N/A	N/A	600	23.6	600	23.6
700	28	700	27.6	700	27.6	N/A	N/A	N/A	N/A	700	27.6	700	27.6	N/A	N/A
750	30	N/A	N/A	N/A	N/A	N/A	N/A	N/A	N/A	750	29.5	N/A	N/A	N/A	N/A
800	32	800	31.5	800	31.5	N/A	N/A	N/A	N/A	800	31.5	800	31.5	N/A	N/A
900	36	900	35.4	900	35.4	N/A	N/A	N/A	N/A	900	35.4	900	35.4	N/A	N/A
1000	40	1000	39.4	1000	39.4	N/A	N/A	N/A	N/A	1000	39.4	1000	39.4	N/A	N/A
1050	42	N/A	N/A	N/A	N/A	N/A	N/A	N/A	N/A	1000	39.4	N/A	N/A	N/A	N/A
1100	44	N/A	N/A	N/A	N/A	N/A	N/A	N/A	N/A	1100	43.3	N/A	N/A	N/A	N/A
1200	48	1200	47.2	1200	47.2	N/A	N/A	N/A	N/A	1200	47.2	1200	47.2	N/A	N/A

[1)] > DN 700 are non-PED versions

Table 8-12 Nominal size L for 7ME6580

Nominal size		L															
		PN 6		PN 10		PN 16[1)]		PN 40		Class 150		AWWA C-207		AS 16		JIS10K	
mm	inch	mm	inch	mm	inch	mm	inch	mm	inch	mm	inch	mm	inch	mm	inch	mm	inch
15	½	N/A	N/A	N/A	N/A	N/A	N/A	N/A	N/A	N/A	N/A	N/A	N/A	N/A	N/A	N/A	N/A
25	1	N/A	N/A	N/A	N/A	N/A	N/A	200	7.9	200	7.9	N/A	N/A	N/A	N/A	200	7.9
40	1½	N/A	N/A	N/A	N/A	N/A	N/A	200	7.9	200	7.9	N/A	N/A	N/A	N/A	200	7.9
50	2	N/A	N/A	N/A	N/A	N/A	N/A	200	7.9	200	7.9	N/A	N/A	200	7.9	200	7.9
65	2½	N/A	N/A	N/A	N/A	200	7.9	N/A	N/A	200	7.9	N/A	N/A	200	7.9	200	7.9
80	3	N/A	N/A	N/A	N/A	200	7.9	N/A	N/A	200	7.9	N/A	N/A	200	7.9	200	7.9

Nominal size		L															
		PN 6		PN 10		PN 16[1]		PN 40		Class 150		AWWA C-207		AS 16		JIS10K	
mm	inch	mm	inch	mm	inch	mm	inch	mm	inch	mm	inch	mm	inch	mm	inch	mm	inch
100	4	N/A	N/A	N/A	N/A	250	9.8	N/A	N/A	250	9.8	N/A	N/A	250	9.8	250	9.8
125	5	N/A	N/A	N/A	N/A	250	9.8	N/A	N/A	250	9.8	N/A	N/A	N/A	N/A	250	9.8
150	6	N/A	N/A	N/A	N/A	300	11.8	N/A	N/A	300	11.8	N/A	N/A	300	11.8	300	11.8
200	8	N/A	N/A	350	13.8	350	13.8	N/A	N/A	350	13.8	N/A	N/A	350	13.8	350	13.8
250	10	N/A	N/A	450	17.7	450	17.7	N/A	N/A	450	17.7	N/A	N/A	450	17.7	450	17.7
300	12	N/A	N/A	500	19.7	500	19.7	N/A	N/A	500	19.7	N/A	N/A	500	19.7	500	19.7
350	14	N/A	N/A	550	21.7	550	21.7	N/A	N/A	550	21.7	N/A	N/A	550	21.7	550	21.7
400	16	N/A	N/A	600	23.6	600	23.6	N/A	N/A	600	23.6	N/A	N/A	600	23.6	600	23.6
450	18	N/A	N/A	600	23.6	600	23.6	N/A	N/A	600	23.6	N/A	N/A	600	23.6	600	23.6
500	20	N/A	N/A	600	23.6	600	23.6	N/A	N/A	600	23.6	N/A	N/A	600	23.6	600	23.6
600	24	N/A	N/A	600	23.6	600	23.6	N/A	N/A	600	23.6	N/A	N/A	600	23.6	600	23.6
700	28	N/A	N/A	700	27.6	700	27.6	N/A	N/A	N/A	N/A	700	27.6	700	27.6	N/A	N/A
750	30	N/A	N/A	N/A	N/A	N/A	N/A	N/A	N/A	N/A	N/A	750	29.5	N/A	N/A	N/A	N/A
800	32	N/A	N/A	800	31.5	800	31.5	N/A	N/A	N/A	N/A	800	31.5	800	31.5	N/A	N/A
900	36	N/A	N/A	900	35.4	900	35.4	N/A	N/A	N/A	N/A	900	35.4	900	35.4	N/A	N/A
1000	40	N/A	N/A	1000	39.4	1000	39.4	N/A	N/A	N/A	N/A	1000	39.4	1000	39.4	N/A	N/A
1050	42	N/A	N/A	N/A	N/A	N/A	N/A	N/A	N/A	N/A	N/A	1000	39.4	N/A	N/A	N/A	N/A
1100	44	N/A	N/A	N/A	N/A	N/A	N/A	N/A	N/A	N/A	N/A	1100	43.3	N/A	N/A	N/A	N/A
1200	48	N/A	N/A	1200	47.2	1200	47.2	N/A	N/A	N/A	N/A	1200	47.2	1200	47.2	N/A	N/A
1400	54	1400	55.1	1400	55.1	1400	55.1	N/A	N/A	N/A	N/A	1400	55.1	N/A	N/A	N/A	N/A
1500	60	1500	59.1	1500	59.1	1500	59.1	N/A	N/A	N/A	N/A	1500	59.1	N/A	N/A	N/A	N/A
1600	66	1600	63	1600	63	1600	63	N/A	N/A	N/A	N/A	1600	63	N/A	N/A	N/A	N/A
1800	72	1800	70.9	1800	70.9	1800	70.9	N/A	N/A	N/A	N/A	1800	70.9	N/A	N/A	N/A	N/A
2000	78	2000	78.7	2000	78.7	2000	78.7	N/A	N/A	N/A	N/A	2000	78.7	N/A	N/A	N/A	N/A

[1] > DN 700 are non-PED versions

Weight

Table 8-13 Weight for 7ME6520

Nominal size		PN 10		PN 16[1]		PN 40		Class 150		AWWA C-207		AS 16		JIS10K	
mm	inch	kg	lbs	kg	lbs	kg	lbs	kg	lbs	kg	lbs	kg	lbs	kg	lbs
15	½	N/A	N/A	N/A	N/A	5	11	5	11	N/A	N/A	N/A	N/A	5	11
25	1	N/A	N/A	N/A	N/A	6	13	6	13	N/A	N/A	N/A	N/A	6	13
40	1½	N/A	N/A	N/A	N/A	9	20	9	20	N/A	N/A	N/A	N/A	9	20
50	2	N/A	N/A	10	22	N/A	N/A	10	22	N/A	N/A	10	22	10	22
65	2½	N/A	N/A	12	26	N/A	N/A	12	26	N/A	N/A	12	26	12	26
80	3	N/A	N/A	13	29	N/A	N/A	13	29	N/A	N/A	13	29	13	29
100	4	N/A	N/A	17	37	N/A	N/A	18	40	N/A	N/A	17	37	17	37
125	5	N/A	N/A	20	44	N/A	N/A	21	46	N/A	N/A	N/A	N/A	20	44
150	6	N/A	N/A	27	60	N/A	N/A	30	66	N/A	N/A	21	46	26	57
200	8	38	84	39	86	N/A	N/A	47	104	N/A	N/A	34	75	35	77
250	10	52	115	56	123	N/A	N/A	64	141	N/A	N/A	48	106	51	112
300	12	62	137	72	159	N/A	N/A	92	203	N/A	N/A	61	134	59	130
350	14	99	218	115	254	N/A	N/A	131	289	N/A	N/A	106	234	88	194
400	16	121	267	143	315	N/A	N/A	161	355	N/A	N/A	124	273	113	249
450	18	144	317	177	390	N/A	N/A	182	401	N/A	N/A	145	320	135	298
500	20	165	364	222	489	N/A	N/A	217	478	N/A	N/A	175	386	151	333
600	24	225	496	321	708	N/A	N/A	305	672	N/A	N/A	285	628	179	395
700	28	272	600	331	730	N/A	N/A	N/A	N/A	284	626	350	772	N/A	N/A
750	30	N/A	N/A	N/A	N/A	N/A	N/A	N/A	N/A	331	730	N/A	N/A	N/A	N/A
800	32	300	661	386	851	N/A	N/A	N/A	N/A	394	869	485	1069	N/A	N/A
900	36	372	820	482	1063	N/A	N/A	N/A	N/A	487	1074	645	1422	N/A	N/A
1000	40	454	1001	672	1482	N/A	N/A	N/A	N/A	589	1299	696	1534	N/A	N/A
1050	42	N/A	N/A	N/A	N/A	N/A	N/A	N/A	N/A	693	1528	N/A	N/A	N/A	N/A
1100	44	N/A	N/A	N/A	N/A	N/A	N/A	N/A	N/A	774	1706	N/A	N/A	N/A	N/A
1200	48	728	1605	1116	2460	N/A	N/A	N/A	N/A	916	2019	1116	2460	N/A	N/A

[1] > DN 700 are non-PED versions

Table 8-14 Weight for 7ME6580

Nominal size		PN 6		PN 10		PN 16[1]		PN 40		Class 150		AWWA C-207		AS 16		JIS10K	
mm	inch	kg	lbs	kg	lbs	kg	lbs	kg	lbs	kg	lbs	kg	lbs	kg	lbs	kg	lbs
15	½	N/A	N/A	N/A	N/A	N/A	N/A	N/A	N/A	N/A	N/A	N/A	N/A	N/A	N/A	N/A	N/A
25	1	N/A	N/A	N/A	N/A	N/A	N/A	6	13	5,5	12	N/A	N/A	N/A	N/A	5	11
40	1½	N/A	N/A	N/A	N/A	N/A	N/A	9	20	7,5	17	N/A	N/A	N/A	N/A	8	18
50	2	N/A	N/A	N/A	N/A	9	20	10	22	9	20	N/A	N/A	9	20	9	20
65	2½	N/A	N/A	N/A	N/A	12	26	N/A	N/A	10	22	N/A	N/A	12	26	12	26

Nominal size		PN 6		PN 10		PN 16[1)]		PN 40		Class 150		AWWA C-207		AS 16		JIS10K	
mm	inch	kg	lbs	kg	lbs	kg	lbs	kg	lbs	kg	lbs	kg	lbs	kg	lbs	kg	lbs
80	3	N/A	N/A	N/A	N/A	13	29	N/A	N/A	15	33	N/A	N/A	13	29	13	29
100	4	N/A	N/A	N/A	N/A	16.5	36	N/A	N/A	20	44	N/A	N/A	16.5	36	16	35
125	5	N/A	N/A	N/A	N/A	22	48	N/A	N/A	24	53	N/A	N/A	N/A	N/A	20	44
150	6	N/A	N/A	N/A	N/A	27	59	N/A	N/A	28	62	N/A	N/A	29	64	27	59
200	8	N/A	N/A	42	92	42	92	N/A	N/A	49	108	N/A	N/A	42	92	41	90
250	10	N/A	N/A	58	128	66	145	N/A	N/A	75	165	N/A	N/A	66	145	58	128
300	12	N/A	N/A	72	159	81	178	N/A	N/A	98	216	N/A	N/A	81	178	72	158
350	14	N/A	N/A	99	218	115	254	N/A	N/A	131	289	N/A	N/A	106	234	88	194
400	16	N/A	N/A	121	267	143	315	N/A	N/A	161	355	N/A	N/A	124	273	113	249
450	18	N/A	N/A	144	317	177	390	N/A	N/A	182	401	N/A	N/A	145	320	135	298
500	20	N/A	N/A	165	364	222	489	N/A	N/A	217	478	N/A	N/A	175	386	151	333
600	24	N/A	N/A	225	496	321	708	N/A	N/A	305	672	N/A	N/A	285	628	179	395
700	28	N/A	N/A	272	600	314	692	N/A	N/A	N/A	N/A	284	626	350	772	N/A	N/A
750	30	N/A	N/A	N/A	N/A	N/A	N/A	N/A	N/A	N/A	N/A	331	730	N/A	N/A	N/A	N/A
800	32	N/A	N/A	300	661	396	873	N/A	N/A	N/A	N/A	394	869	485	1069	N/A	N/A
900	36	N/A	N/A	372	820	474	1043	N/A	N/A	N/A	N/A	487	1074	645	1422	N/A	N/A
1000	40	N/A	N/A	454	1001	600	1321	N/A	N/A	N/A	N/A	589	1299	696	1534	N/A	N/A
1050	42	N/A	N/A	N/A	N/A	N/A	N/A	N/A	N/A	N/A	N/A	693	1528	N/A	N/A	N/A	N/A
1100	44	N/A	N/A	N/A	N/A	N/A	N/A	N/A	N/A	N/A	N/A	774	1706	N/A	N/A	N/A	N/A
1200	48	N/A	N/A	728	1605	885	1948	N/A	N/A	N/A	N/A	916	2019	1116	2460	N/A	N/A
1400	54	1338	2944	1592	3502	1890	4158	N/A	N/A	N/A	N/A	1592	3502	N/A	N/A	N/A	N/A
1500	60	1520	3344	1850	4070	2238	4924	N/A	N/A	N/A	N/A	1950	4290	N/A	N/A	N/A	N/A
1600	66	1696	3731	2110	4642	2525	5555	N/A	N/A	N/A	N/A	2110	4642	N/A	N/A	N/A	N/A
1800	72	2110	4642	2560	5632	3460	7612	N/A	N/A	N/A	N/A	2560	5632	N/A	N/A	N/A	N/A
2000	78	2564	5641	3640	8008	4205	9251	N/A	N/A	N/A	N/A	3640	8008	N/A	N/A	N/A	N/A

[1)] > DN 700 are non-PED versions

Product documentation and support

A

A.1 Product documentation

Process instrumentation product documentation is available in the following formats:

- Certificates (http://www.siemens.com/processinstrumentation/certificates)
- Downloads (firmware, EDDs, software) (http://www.siemens.com/processinstrumentation/downloads)
- Catalog and catalog sheets (http://www.siemens.com/processinstrumentation/catalogs)
- Manuals (http://www.siemens.com/processinstrumentation/documentation)
  You have the option to show, open, save, or configure the manual.
  - "Display": Open the manual in HTML5 format
  - "Configure": Register and configure the documentation specific to your plant
  - "Download": Open or save the manual in PDF format
  - "Download as html5, only PC": Open or save the manual in the HTML5 view on your PC

You can also find manuals with the Mobile app at Industry Online Support (https://support.industry.siemens.com/cs/ww/en/sc/2067). Download the app to your mobile device and scan the device QR code.

Product documentation by serial number

Using the PIA Life Cycle Portal, you can access the serial number-specific product information including technical specifications, spare parts, calibration data, or factory certificates.

Entering a serial number

1. Open the PIA Life Cycle Portal (https://www.pia-portal.automation.siemens.com).
2. Select the desired language.
3. Enter the serial number of your device. The product documentation relevant for your device is displayed and can be downloaded.

To display factory certificates, if available, log in to the PIA Life Cycle Portal using your login or register.

Scanning a QR code

1. Scan the QR code on your device with a mobile device.
2. Click "PIA Portal".

To display factory certificates, if available, log in to the PIA Life Cycle Portal using your login or register.

A.2 Technical support

Technical support

If this documentation does not completely answer your technical questions, you can enter a Support Request (http://www.siemens.com/automation/support-request).

Additional information on our technical support can be found at Technical Support (http://www.siemens.com/automation/csi/service).

Service & support on the Internet

In addition to our technical support, Siemens offers comprehensive online services at Service & Support (http://www.siemens.com/automation/service&support).

Contact

If you have further questions about the device, contact your local Siemens representative at Personal Contact (http://www.automation.siemens.com/partner).

To find the contact for your product, go to "all products and branches" and select "Products & Services > Industrial automation > Process instrumentation".

Contact address for business unit:
Siemens AG
Digital Industries
Process Automation
Östliche Rheinbrückenstr. 50
76187 Karlsruhe, Germany

Appendix

B

B.1 Measuring ranges

MAG 5100 W (7ME6520) MI-001 is verified and labeled at a given Q3 and Q3/Q4 = 1.25 and Q2/Q1 = 1.6 measuring ranges:

Order code: P11	50 (2")	65 (2½")	80 (3")	100 (4")	125 (5")	150 (6")	200 (8")	250 (10")	300 (12")
"R" Q3/Q1	40	40	40	40	40	40	40	40	40
Q4 [m³/h]	20	31.25	50	78.75	125	200	312.5	500	787.5
Q3 [m³/h]	**16**	**25**	**40**	**63**	**100**	**160**	**250**	**400**	**630**
Q2 [m³/h]	0.64	1.0	1.6	2.52	4.0	6.4	10.0	16.0	25.2
Q1 [m³/h]	0.4	0.63	1.0	1.58	2.5	4.0	6.25	10.0	15.75

Order code: P12	50 (2")	65 (2½")	80 (3")	100 (4")	125 (5")	150 (6")	200 (8")	250 (10")	300 (12")
"R" Q³/Q1	63	63	63	63	63	63	63	63	63
Q4 [m³/h]	20	31.25	50	78.75	125	200	312.5	500	787.5
Q3 [m³/h]	**16**	**25**	**40**	**63**	**100**	**160**	**250**	**400**	**630**
Q2 [m³/h]	0.41	0.63	1.02	1.6	2.54	4.06	6.35	10.2	16.0
Q1 [m³/h]	0.25	0.40	0.63	1.00	1.59	2.54	3.97	6.35	10.0

Order code: P13	50 (2")	65 (2½")	80 (3")	100 (4")	125 (5")	150 (6")	200 (8")	250 (10")	300 (12")
"R" Q³/Q1	80	80	80	80	80	80	80	80	80
Q4 [m³/h]	20	31.25	50	78.75	125	200	312.5	500	787.5
Q3 [m³/h]	**16**	**25**	**40**	**63**	**100**	**160**	**250**	**400**	**630**
Q2 [m³/h]	0.32	0.5	0.8	1.26	2.0	3.2	5.0	8.0	12.6
Q1 [m³/h]	0.20	0.31	0.50	0.79	1.25	2.00	3.13	5.00	7.9

Order code: P16	50 (2")	65 (2½")	80 (3")	100 (4")	125 (5")	150 (6")	200 (8")	250 (10")	300 (12")
"R" Q³/Q1	160	160	160	160	160	160	160	160	160
Q4 [m³/h]	50	78.75	125	200	312.5	500	787.5	1250	2000
Q3 [m³/h]	**40**	**63**	**100**	**160**	**250**	**400**	**630**	**1000**	**1600**
Q2 [m³/h]	0.4	0.63	1.0	1.6	2.5	4.0	6.3	10.0	16.0
Q1 [m³/h]	0.25	0.39	0.63	1.0	1.56	2.5	3.94	6.3	10.0

Order code: P17	50 (2")	65 (2½")	80 (3")	100 (4")	125 (5")	150 (6")	200 (8")	250 (10")	300 (12")
"R" Q³/Q1	200	200	200	200	200	200	200	200	200
Q4 [m³/h]	50	78.75	125	200	312.5	500	787.5	1250	2000
Q3 [m³/h]	**40**	**63**	**100**	**160**	**250**	**400**	**630**	**1000**	**1600**

Order code: P17	50 (2")	65 (2½")	80 (3")	100 (4")	125 (5")	150 (6")	200 (8")	250 (10")	300 (12")
Q2 [m³/h]	0.32	0.50	0.80	1.28	2.0	3.2	5.0	8.0	12.8
Q1 [m³/h]	0.2	0.32	0.5	0.8	1.25	2.0	3.15	5.0	8.0

Order code: P18	50 (2")	65 (2½")	80 (3")	100 (4")	125 (5")	150 (6")	200 (8")	250 (10")	300 (12")
"R" Q³/Q1	250	250	250	250	250	250	250	250	250
Q4 [m³/h]	50	78.75	125	200	312.5	500	787.5	1250	2000
Q3 [m³/h]	**40**	**63**	**100**	**160**	**250**	**400**	**630**	**1000**	**1600**
Q2 [m³/h]	0.26	0.4	0.64	1.02	1.6	2.56	4.0	6.4	10.24
Q1 [m³/h]	0.16	0.25	0.4	0.64	1.0	1.6	2.52	4.0	6.4

Order code: P24	350 (14")	400 (16")	450 (18")	500 (20")	600 (24")
"R" Q³/Q1	40	40	40	40	40
Q4 [m³/h]	1250	1250	2000	2000	3125
Q3 [m³/h]	**1000**	**1000**	**1600**	**1600**	**2500**
Q2 [m³/h]	40.0	40.0	64.0	64.0	100.0
Q1 [m³/h]	25.0	25.0	40.0	40.0	62.5

Order code: P25	350 (14")	400 (16")	450 (18")	500 (20")	600 (24")
"R" Q³/Q1	63	63	63	63	63
Q4 [m³/h]	1250	2000	3125	3125	5000
Q3 [m³/h]	**1000**	**1600**	**2500**	**2500**	**4000**
Q2 [m³/h]	25.4	40.63	63.49	63.49	101.6
Q1 [m³/h]	15.9	25.4	39.7	39.7	63.49

Order code: P26	350 (14")	400 (16")	450 (18")	500 (20")	600 (24")
"R" Q³/Q1	80	80	80	80	80
Q4 [m³/h]	2000	3125	5000	5000	7875
Q3 [m³/h]	**1600**	**2500**	**4000**	**4000**	**6300**
Q2 [m³/h]	32.0	50.0	80.0	80.0	126.0
Q1 [m³/h]	20	31.25	50.0	50.0	78.75

Order code: P27	350 (14")	400 (16")	450 (18")	500 (20")	600 (24")
"R" Q³/Q1	100	100	100	100	100
Q4 [m³/h]	3125	3125	5000	5000	7875
Q3 [m³/h]	**2500**	**2500**	**4000**	**4000**	**6300**
Q2 [m³/h]	40.0	40.0	64.0	64.0	100.8
Q1 [m³/h]	25.0	25.0	40.0	40.0	63.0

Order code: P29	700 (28")	750 (30")	800 (32")	900 (36")	1000 (40")	1200 (48")
"R" $Q^3/Q1$	40	40	40	40	40	40
Q4 [m^3/h]	5000	5000	5000	7875	7875	7875
Q3 [m^3/h]	**4000**	**4000**	**4000**	**6300**	**6300**	**6300**
Q2 [m^3/h]	160.0	160.0	160.0	252.0	252.0	252.0
Q1 [m^3/h]	100.0	100.0	100.0	157.5	157.5	157.5

Order code: P30	700 (28")	750 (30")	800 (32")	900 (36")	1000 (40")	1200 (48")
"R" $Q^3/Q1$	63	63	63	63	63	-
Q4 [m^3/h]	5000	5000	5000	7875	7875	-
Q3 [m^3/h]	**4000**	**4000**	**4000**	**6300**	**6300**	-
Q2 [m^3/h]	101.6	101.6	101.6	160.0	160.0	-
Q1 [m^3/h]	63.5	63.5	63.5	100.0	100.0	-

Order code: P30	700 (28")	750 (30")	800 (32")	900 (36")	1000 (40")	1200 (48")
"R" $Q^3/Q1$	80	80	80	80	80	-
Q4 [m^3/h]	5000	5000	5000	7875	7875	-
Q3 [m^3/h]	**4000**	**4000**	**4000**	**6300**	**6300**	-
Q2 [m^3/h]	80.0	80.0	80.0	126.0	126.0	-
Q1 [m^3/h]	50.0	50.0	50.0	78.75	78.75	-

B.2 Measuring range according to EN1434 (2007)

DN	15	25	40	50	65	80	100	125	150	200	250	300
$Q_p/Q1$	25	25	25	25	25	25	25	25	25	25	25	25
Q_S (1.25* Q_p)	1.9	4.4	12.5	20	31.25	50	78.75	125	200	312.5	500	787.5
Q_p	1.5	3.5	10.0	16	25	40	63	100	160	250	400	630
Q1	0.06	0.14	0.4	0.64	1	1.6	2.52	4	6.4	10	16	25.2

DN	15	25	40	50	65	80	100	125	150	200	250	300
$Q_p/Q1$	50	50	50	50	50	50	50	50	50	50	50	50
Q_S (1.25* Q_p)	1.9	4.4	12.5	20	31.25	50	78.75	125	200	312.5	500	787.5
Q_p	1.5	3.5	10.0	16	25	40	63	100	160	250	400	630
Q1	0.03	0.07	0.2	0.32	0.5	0.8	1.26	2	3.2	5	8	12.6

DN	15	25	40	50	65	80	100	125	150	200	250	300
$Q_p/Q1$	100	100	100	100	100	100	100	100	100	100	100	100
Q_S (1.25* Q_p)	1.9	4.4	12.5	20	31.25	50	78.75	125	200	312.5	500	787.5

DN	15	25	40	50	65	80	100	125	150	200	250	300
Q_p	1.5	3.5	10.0	16	25	40	63	100	160	250	400	630
Q1	0.02	0.04	0.1	0.16	0.25	0.4	1.63	1	1.6	2.5	4	6.3

DN	15	25	40	50	65	80	100	125	150	200	250	300
Q_p/Q1	100	100	100	100	100	100	100	100	100	100	100	100
Q_S (1.25* Q_p)	5	11	31	50	78.75	125	200	312.5	500	787.5	1250	2000
Q_p	4	9	25	40	63	100	160	250	400	650	1000	1600
Q1	0.04	0.09	0.3	0.64	0.63	1	1.6	2.5	4	6.3	10	16

B.3 Flange mating dimensions (metric)

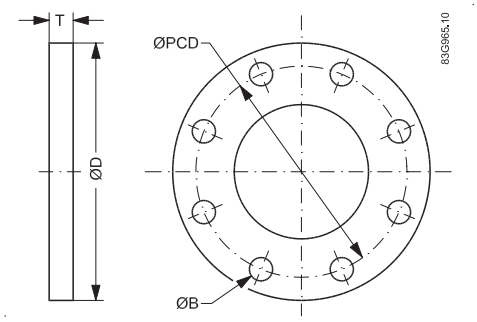

Figure B-1 Flange mating dimensions

Table B-1 Flange mating dimensions (metric) for 7ME6520

DN	Dimensions (mm)				Bolting	
mm	D	PCD	T	B	Holes	Bolts
PN10						
200	340	295	24	22	8	M20
250	395	350	26	22	12	M20
300	445	400	26	22	12	M20
350	505	460	30	22	16	M20
400	565	515	32	26	16	M24
450	615	565	36	26	20	M24
500	670	620	38	26	20	M24
600	780	725	42	30	20	M27
700	895	840	35	30	24	M27
800	1015	950	38	33	24	M30
900	1115	1050	38	33	28	M30
1000	1230	1160	44	36	28	M33
1200	1455	1380	55	39	32	M36
PN16						
50	165	125	20	18	4	M16

DN	Dimensions (mm)				Bolting	
mm	D	PCD	T	B	Holes	Bolts
65	185	145	20	18	8	M16
80	200	160	20	18	8	M16
100	220	180	22	18	8	M16
125	250	210	22	18	8	M16
150	285	240	24	22	8	M20
200	340	295	26	22	12	M20
250	405	355	30	26	12	M24
300	460	410	36	26	12	M24
350	520	470	37	26	16	M24
400	580	525	41	30	16	M27
450	640	585	46	30	20	M27
500	715	650	50	33	20	M30
600	840	770	56	36	20	M33
700	910	840	40	36	24	M33
800	1025	950	41	39	24	M36
900	1125	1050	48	39	28	M36
1000	1255	1170	59	42	28	M39
1200	1485	1390	78	48	32	M45
PN40						
15	95	65	14	14	4	M12
25	115	85	16	14	4	M16
40	150	110	18	18	4	M16
150 lb						
15	89	60	12	16	4	M12
25	108	79	16	16	4	M12
40	127	98	19	16	4	M12
50	150	121	21	19	4	M16
65	180	140	24	19	4	M16
80	190	152	26	19	4	M16
100	230	191	27	19	8	M16
125	255	216	28	22	8	M20
150	279	241	31	22	8	M20
200	343	298	34	22	8	M20
250	406	362	38	25	12	M24
300	483	432	42	25	12	M24
350	535	476	35	29	12	M27
400	595	540	37	29	16	M27
450	635	578	40	32	16	M30
500	700	635	43	32	20	M30
600	815	749	48	35	20	M33
AWWA						
700	927	864	33	35	28	M33

DN	Dimensions (mm)				Bolting	
mm	D	PCD	T	B	Holes	Bolts
750	984	914	35	35	28	M33
800	1060	978	38	41	28	M39
900	1168	1086	41	41	32	M39
1000	1289	1200	41	41	36	M39
1050	1346	1257	45	41	36	M39
1100	1403	1315	45	41	40	M39
1200	1511	1422	48	41	44	M39
AS 4087 PN16						
50	150	114	20	18	4	M16
65	165	127	20	18	4	M16
80	185	146	20	18	4	M16
100	215	178	20	18	4	M16
150	280	235	23	18	8	M16
200	335	292	24	18	8	M16
250	405	356	30	22	8	M20
300	455	406	33	22	12	M20
350	525	470	30	26	12	M24
400	580	521	30	26	12	M24
450	640	584	30	26	12	M24
500	705	641	38	26	16	M24
600	825	756	48	30	16	M27
700	910	845	56	30	20	M27
800	1060	984	56	36	20	M33
900	1175	1092	66	36	24	M33
1000	1255	1175	66	36	24	M33
1200	1490	1410	76	36	32	M33
K10						
15	95	70	12	15	4	M12
25	125	90	16	19	4	M16
40	140	105	18	19	4	M16
50	155	120	20	19	4	M16
65	175	140	20	19	4	M16
80	185	150	20	19	8	M16
100	210	175	20	19	8	M16
125	250	210	22	23	8	M20
150	280	240	22	23	8	M20
200	330	290	22	23	12	M20
250	400	355	24	25	12	M22
300	445	400	24	25	16	M22
350	490	445	26	25	16	M22
400	560	510	28	27	16	M24
450	620	565	30	27	20	M24

DN	Dimensions (mm)				Bolting	
mm	D	PCD	T	B	Holes	Bolts
500	675	620	30	27	20	M24
600	795	730	32	33	24	M30

Table B-2 Flange mating dimensions (metric) for 7ME6580

DN	Dimensions (mm)				Bolting	
mm	D	PCD	T	B	Holes	Bolts
PN6						
1400	1630	1560	56	36	36	M33
1500	1730	1660	80	36	36	M33
1600	1830	1760	63	36	40	M33
1800	2045	1970	69	39	44	M36
2000	2265	2180	74	42	48	M39
PN10						
200	340	295	24	22	8	M20
250	395	350	26	22	12	M20
300	445	400	26	22	12	M20
350	505	460	30	22	16	M20
400	565	515	32	26	16	M24
450	615	565	36	26	20	M24
500	670	620	38	26	20	M24
600	780	725	42	30	20	M27
700	895	840	35	30	24	M27
800	1015	950	38	33	24	M30
900	1115	1050	38	33	28	M30
1000	1230	1160	44	36	28	M33
1200	1455	1380	55	39	32	M36
1400	1675	1590	65	42	36	M39
1500	1785	1700	105	42	36	M39
1600	1915	1820	75	48	40	M45
1800	2115	2020	85	48	44	M45
2000	2325	2230	90	48	48	M45
PN16						
65	185	145	20	18	8	M16
80	200	160	20	18	8	M16
100	220	180	22	18	8	M16
125	250	210	22	18	8	M16
150	285	240	24	22	8	M20
200	340	295	26	22	12	M20
250	405	355	29	26	12	M24

DN	Dimensions (mm)				Bolting	
mm	D	PCD	T	B	Holes	Bolts
300	460	410	32	26	12	M24
350	520	470	37	26	16	M24
400	580	525	41	30	16	M27
450	640	585	46	30	20	M27
500	715	650	50	33	20	M30
600	840	770	56	36	20	M33
700 (WN)	910	840	40	36	24	M33
800	1025	950	41	39	24	M36
900	1125	1050	48	39	28	M36
1000	1255	1170	59	42	28	M39
1200	1485	1390	78	48	32	M45
1400	1685	1590	84	48	36	M45
1500	1820	1710	130	56	36	M52
1600	1930	1820	102	56	40	M52
1800	2130	2020	110	56	44	M52
2000	2345	2230	124	62	48	M56
PN40						
25	115	85	16	14	4	M12
40	150	110	18	18	4	M16
50	165	125	20	18	4	M16
150 lb						
25	110	79	16	16	4	M12
40	125	98	20	16	4	M12
50	150	121	21	19	4	M16
65	180	140	24	19	4	M16
80	190	152	26	19	4	M16
100	230	191	26	19	8	M16
125	255	216	26	22	8	M20
150	280	241	27	22	8	M20
200	345	299	31	22	8	M20
250	405	362	32	25	12	M24
300	485	432	34	25	12	M24
350	535	476	37	29	12	M27
400	595	540	37	29	16	M27
450	635	578	42	32	16	M30
500	700	635	45	32	20	M30
600	815	749	50	35	20	M33
AWWA						
700	927	864	33	35	28	M33
750	984	914	35	35	28	M33
800	1061	978	38	41	28	M39
900	1168	1086	41	41	32	M39

DN	Dimensions (mm)				Bolting	
mm	D	PCD	T	B	Holes	Bolts
1000	1289	1200	41	41	36	M39
1050	1346	1257	45	41	36	M39
1100	1403	1316	45	41	40	M39
1200	1511	1422	48	41	44	M39
1400	1683	1594	54	48	44	M45
1500	1854	1759	57	48	52	M45
1600	2032	1930	64	48	52	M45
1800	2197	2096	67	48	60	M45
2000	2362	2261	70	54	64	M52
AS 4087 PN16						
50	150	114	11	18	4	M16
65	165	127	11	18	4	M16
80	185	146	11	18	4	M16
100	215	178	13	18	4	M16
150	280	235	13	18	8	M16
200	335	292	19	18	8	M16
250	405	356	19	22	8	M20
300	455	406	23	22	12	M20
350	525	470	30	26	12	M24
400	580	521	30	26	12	M24
450	640	584	30	26	12	M24
500	705	641	38	26	16	M24
600	825	756	48	30	16	M27
700	910	845	56	30	20	M27
800	1060	984	56	36	20	M33
900	1175	1092	66	36	24	M33
1000	1255	1175	66	36	24	M33
1200	1490	1410	76	36	32	M33
K10						
25	125	90	14	19	4	M16
40	140	105	16	19	4	M16
50	155	120	16	19	4	M16
65	175	140	18	19	4	M16
80	185	150	18	19	8	M16
100	210	175	18	19	8	M16
125	250	210	20	23	8	M20
150	280	240	22	23	8	M20
200	330	290	22	23	12	M20
250	400	355	24	25	12,	M22
300	445	400	24	25	16	M22
350	490	445	26	25	16	M22
400	560	510	28	27	16	M24

DN	Dimensions (mm)				Bolting	
mm	D	PCD	T	B	Holes	Bolts
450	620	565	30	27	20	M24
500	675	620	30	27	20	M24
600	795	730	32	33	24	M30

B.4 Factory settings

Dimension-dependent factory settings

Table B-3 50 Hz version

DN			Qmax				Unit	Volume/ pulse	Pulse unit	Totalizer unit
			Order no. 7ME6520		Order no. 7ME6580					
mm	Inch	Fac settings	Min.	Max.	Min.	Max.				
15	½	**2000**	159	6361	-	-	l/h	1	l	l
25	1	**5000**	441	17671	441	17671	l/h	10	l	l
40	1½	**12**	1.1	45	1.1	45	m^3/h	10	l	l
50	2	**20**	1.7	63	1.7	70	m^3/h	10	l	l
65	2½	**30**	2.9	100	2.9	119	m^3/h	100	l	l
80	3	**50**	4.0	160	4.5	180	m^3/h	100	l	l
100	4	**120**	6.2	250	7	282	m^3/h	100	l	l
125	5	**180**	10.0	400	11	441	m^3/h	100	l	m^3
150	6	**250**	15.7	629	15.9	636	m^3/h	100	l	m^3
200	8	**400**	24.9	997	28.2	1130	m^3/h	1	m^3	m^3
250	10	**700**	40.0	1600	44.1	1767	m^3/h	1	m^3	m^3
300	12	**1000**	62.5	2500	63.6	2544	m^3/h	1	m^3	m^3
350	14	**1200**	86.5	3463	86.5	3463	m^3/h	1	m^3	m^3
400	16	**1800**	113	4523	113	4523	m^3/h	1	m^3	m^3
450	18	**2000**	143.1	5725	143.1	5725	m^3/h	1	m^3	m^3
500	20	**3000**	176.7	7068	176.7	7068	m^3/h	1	m^3	m^3
600	24	**4000**	254.4	10178	254.4	10178	m^3/h	10	m^3	m^3
700	28	**5000**	346.3	13854	346.3	13854	m^3/h	10	m^3	m^3
750	30	**6000**	397.6	15904	397.6	15904	m^3/h	10	m^3	m^3
800	32	**7000**	452.3	18095	452.3	18095	m^3/h	10	m^3	m^3
900	36	**9000**	572.5	22902	572.5	22902	m^3/h	10	m^3	m^3
1000	40	**12000**	706.8	28274	706.8	28274	m^3/h	10	m^3	m^3
1050	42	**12000**	706.8	28274	706.8	28274	m^3/h	10	m^3	m^3
1100	44	**14000**	855.2	34211	855.2	34211	m^3/h	10	m^3	m^3
1200	48	**15000**	1017.8	40715	1017.8	40715	m^3/h	10	m^3	m^3

DN			Qmax				Unit	Volume/ pulse	Pulse unit	Totalizer unit
			Order no. 7ME6520		Order no. 7ME6580					
1400	54	**25000**	-	-	1385.4	55417	m^3/h	10	m^3	m^3
1500	60	**30000**	-	-	1590.4	63617	m^3/h	10	m^3	m^3
1600	66	**35000**	-	-	1809.5	72382	m^3/h	10	m^3	m^3
1800	72	**40000**	-	-	2290.2	91608	m^3/h	10	m^3	m^3
2000	78	**45000**	-	-	2827.4	113097	m^3/h	10	m^3	m^3

Table B-4 60 Hz version

DN			Qmax				Unit	Volume/ pulse	Pulse unit	Totalizer unit
			Order no. 7ME6520		Order no. 7ME6580					
mm	Inch	**Fac. settings**	Min.	Max.	Min.	Max.				
15	½	9	0.7	28	-	-	US GPM	1	US G	US G
25	1	**22**	1.9	77.8	1.9	77.8	US GPM	1	US G	US G
40	1½	**52**	4.9	199.1	4.9	199.1	US GPM	1	US G	US G
50	2	**88**	6.9	277.2	7.7	311.2	US GPM	1	US G	US G
65	2½	**132**	11.0	440.2	13.1	525.9	US GPM	1	US G	US G
80	3	**220**	17.6	705.1	19.9	796.7	US GPM	1	US G	US MG
100	4	**528**	27.5	1101	31.1	1244.8	US GPM	1	US G	US MG
125	5	**793**	44.0	1762.2	48.6	1945.1	US GPM	1	US G	US MG
150	6	**1101**	69.3	2772.9	70	2800.9	US GPM	1	US G	US MG
200	8	**1761**	109.7	4391.9	124.4	4979.5	US GPM	1	US G	US MG
250	10	**3082**	176.1	7045.2	194.5	7780.5	US GPM	1	US G	US MG
300	12	**4402**	275.1	11007.8	280	11203.9	US GPM	1	US G	US MG
350	14	**5283**	381.2	15249.7	381.2	15249.7	US GPM	1	US G	US MG
400	16	**7925**	497.9	19918.1	497.9	19918.1	US GPM	1	US G	US MG
450	18	**8806**	630.2	25208.8	630.2	25208.8	US GPM	1	US G	US MG
500	20	**13209**	778	31122	778	31122	US GPM	1	US G	US MG
600	24	**17611**	1120.3	44815.7	1120.3	44815.7	US GPM	10	US G	US MG
700	28	**19812**	1524.9	60999.1	1524.9	60999.1	US GPM	10	US G	US MG
750	30	**22014**	1750.6	70024.5	1750.6	70024.5	US GPM	10	US G	US MG
800	32	**30820**	1991.8	79672.4	1991.8	79672.4	US GPM	10	US G	US MG
900	36	**39626**	2522.8	100835.3	2522.8	100835.3	US GPM	10	US G	US MG
1000	40	**52834**	3112.2	124488.1	3112.2	124488.1	US GPM	10	US G	US MG
1050	42	**52834**	3431.2	137248.1	3431.2	137248.1	US GPM	10	US G	US MG
1100	44	**61640**	3765.7	150630.6	3765.7	150630.6	US GPM	10	US G	US MG
1200	48	**66043**	4481	179262.9	4481	179262.9	US GPM	10	US G	US MG
1400	54	**110072**	-	-	6099.9	243993.7	US GPM	1000	US G	US MG
1500	60	**132086**	-	-	7002.4	280098.3	US GPM	1000	US G	US MG
1600	66	**154100**	-	-	7967.2	318689.6	US GPM	1000	US G	US MG

DN			Qmax				Unit	Volume/ pulse	Pulse unit	Totaliz-er unit
			Order no. 7ME6520		Order no. 7ME6580					
1800	72	**176115**	-	-	10083.5	403341.5	US GPM	1000	US G	US MG
2000	78	**198129**	-	-	12448.8	497952.5	US GPM	1000	US G	US MG

B.5 Coil resistance

Table B-5 Coil resistance [Ω]

		MAG 1100, MAG 1100 F		MAG 3100, MAG 3100 P, MAG 5100 W (Order no. 7ME6580)		MAG 5100 W (Order no. 7ME6520)	
DN	Inch	Resistance	Tolerance	Resistance	Tolerance	Resistance	Tolerance
2	1/12	104	+/− 5	104			
3	1/8	104	+/− 5	104			
6	1/4	99	+/− 17	104			
10	3/8	99	+/− 17	104			
15[1)]	1/2	91	+/− 9	104			
25	1	91	+/− 17	104	+/− 2	104	+/− 10
40	11/2	91	+/− 9	92	+/− 2	92	+/− 10
50	2	91	+/− 9	92	+/− 2	119.4	+/− 10
65	21/2	99	+/− 17	100	+/− 2	127	+/− 10
80	3	91	+/− 17	94	+/− 2	126	+/− 10
100	4	91	+/− 9	92	+/− 2	125	+/− 10
125	5	92	+/− 2	126	+/− 10		
150	6	94	+/− 2	116	+/− 10		
200	8	90	+/− 2	109	+/− 10		
250	10	92	+/− 2	104	+/− 10		
300	12	100	+/− 2	108	+/− 10		
350	14	112	+/− 2	100	+/− 6		
400	16	100	+/− 4	100	+/− 6		
450	18	108	+/− 4	100	+/− 6		
500	20	122	+/− 4	100	+/− 6		
600	24	115	+/− 4	98	+/− 6		
700	28	128	+/− 4	98	+/− 6		
750	30	133					
800	32	128	+/− 4	98	+/− 6		
900	36	131	+/− 4	98	+/− 6		
1000	40	131	+/− 4	88	+/− 6		
1100	44	126					
1200	48	130	+/− 4	88	+/− 6		
1400	54	130					
1500	60	124					

		MAG 1100, MAG 1100 F		MAG 3100, MAG 3100 P, MAG 5100 W (Order no. 7ME6580)		MAG 5100 W (Order no. 7ME6520)	
1600	66	133					
1800	72	133					
2000	78	147					

[1] On MAG 1100 DN 15 produced as of May 1999 the coil resistance must be 86 ohm, +8/−4 ohm.

Note

Reference values

- All resistance values are at 20 °C
- The resistance changes proportionally 0.4% / °C

Spare parts

Description	
Cable glands, 2 pcs. M20 ½" NPT	
Sealing screws for sensor/transmitter, 2 pcs.	
Terminal box, in polyamide, inclusive of lid M20 ½" NPT	
Terminal box lid, in polyamide	

Description	
Terminal box, in stainless steel, inclusive of lid M20 ½" NPT	
Potting kit for terminal box of MAG sensors for I P68/NEMA 6P (not for EX)	

Certificates and support

C

C.1 Product documentation

Process instrumentation product documentation is available in the following formats:

- Certificates
- Downloads (firmware, EDDs, software)
- Catalog and catalog sheets
- Manuals
  You have the option to show, open, save, or configure the manual.
  - "Display": Open the manual in HTML5 format
  - "Configure": Register and configure the documentation specific to your plant
  - "Download": Open or save the manual in PDF format
  - "Download as html5, only PC": Open or save the manual in the HTML5 view on your PC

You can also find manuals with the Mobile app at AUTOHOTSPOT. Download the app to your mobile device and scan the device QR code.

Product documentation by serial number

Using the PIA Life Cycle Portal, you can access the serial number-specific product information including technical specifications, spare parts, calibration data, or factory certificates.

Entering a serial number

1. Open the AUTOHOTSPOT.
2. Select the desired language.
3. Enter the serial number of your device. The product documentation relevant for your device is displayed and can be downloaded.

To display factory certificates, if available, log in to the PIA Life Cycle Portal using your login or register.

Scanning a QR code

1. Scan the QR code on your device with a mobile device.
2. Click "PIA Portal".

To display factory certificates, if available, log in to the PIA Life Cycle Portal using your login or register.

See also

Industry online support portal (http://www.siemens.com/processinstrumentation/certificates)

C.2 Technical support

Technical support

If this documentation does not completely answer your technical questions, you can enter a Support Request.

Additional information on our technical support can be found at Technical Support.

Service & support on the Internet

In addition to our technical support, Siemens offers comprehensive online services at Service & Support.

Contact

If you have further questions about the device, contact your local Siemens representative at Personal Contact.

To find the contact for your product, go to "all products and branches" and select "Products & Services > Industrial automation > Process instrumentation".

Contact address for business unit:
Siemens AG
Digital Industries
Process Automation
Östliche Rheinbrückenstr. 50
76187 Karlsruhe, Germany

See also

Instructions and manuals (http://www.siemens.com/processinstrumentation/documentation)

Technical Support (http://www.siemens.com/automation/csi/service)

Partner (http://www.automation.siemens.com/partner)

Support request (http://www.siemens.com/automation/support-request)

Services & Support (http://www.siemens.com/automation/service&support)

C.3 QR code label

A QR code label can be found on the device. With the use of a smart phone, the QR code provides a direct link to a website with information specific to the device, such as manuals, FAQs, certificates, etc.

Glossary

ASIC

Application-Specific Integrated Circuit is an integrated circuit (IC) customized for a particular use, rather than intended for general-purpose use.

Elex V

EMC

Electromagnetic compatibility (EMC) is the branch of electrical sciences which studies the unintentional generation, propagation and reception of electromagnetic energy with reference to the unwanted effects (Electromagnetic Interference, or EMI) that such energy may induce. The goal of EMC is the correct operation, in the same electromagnetic environment, of different equipment which use electromagnetic phenomena, and the avoidance of any interference effects.

IP

An IP (Ingress Protection) number is used to specify the environmental protection of enclosures around electronic equipment. These ratings are determined by specific tests. The IP number is composed of two numbers, the first referring to the protection against solid objects and the second against liquids. The higher the number, the better the protection. For example, in IP67 the first Number (6) means that the device is totally protected against dust, and the second (7) that it is protected against the effect of immersion between 15cm and 1m

PED

The Pressure Equipment Directive (97/23/EC) is the legislative framework on European level for equipment subject to a pressure hazard. It was adopted by the European Parliament and the European Council in May 1997 and has been obligatory throughout the European Union since May 2002.

SENSORPROM

All sensor related settings/data saved on an EPROM. SENSORPROM technology automatically configures the transmitter at start up providing calibration data, pipe size, sensor type, and output settings. The SENSORPROM automatically stores values or settings changed by users, and automatically re-programs any new transmitter without loss of accuracy.

USM

USM II is a Communication Platform. The Siemens USM II concept enables fitting of add-on bus modules without loss of functionality:

1. All modules can be fitted as true "plug & play"
2. Module and transmitter are automatically configured through the SENSORPROM

Index

A

Abrasive liquids, 27
Add-on modules, (See Communication module)
Applications, 19

C

Cable specifications, 34, 53
Catalog
    catalog sheets, 65, 81
Cathodic protection, 30
Certificates, 11, 65, 81
Coil insulation check, 47
Coil resistance check, 47
Communication modules, 19
Customer Support, (Refer to Technical support)
Customer Support Hotline, 43

D

Dimensions, 60
Direct burial, 39
Disposal, 45
Document history, 7
Downloads, 65, 81

E

Electrical connection
    Cable specifications, 34
    Remote installations, 34
    Safety instructions, 33
Electrode resistance check, 48
Empty pipe detection, 27

F

FAQ
    Fluctuating process values, 48
Flange mating dimensions, 70

G

Gas / Air bubbles, 27

H

Hazardous area
    Approvals, 15
    Laws and directives, 11
Horizontal Pipes, 27
Hotline, 43, (Refer to Support request)

I

Inlet / outlet conditions, 25
Installation
    Horizontal Pipes, 27
    in U-tube, 24
    Indoor/outdoor, 23
    Large pipes, 26
    Location in system, 24
    Mounting of sensor, 28
    Partially filled pipes, 26
    Pipes with free outlet, 25
    Remote, 34
    Safety instructions, 23
    Vertical pipes, 27
Internet
    Contact person, 44
    Support, 43
Items supplied, 8

L

Laws and directives
    Disassembly, 11
    Personell, 11

M

Mains supply, 33
Maintenance, 41
Manuals, 65, 81
Material compatibility, 12
Measurement principle, 20
Modifications
    correct usage, 16
    improper, 16
Mounting, (See Installation)

P

Potential equalization, 30
Potting, 38
Pressure
    Safety instructions, 23
Pressure Equipment Directive, 13
Process fluid
    Conductivity, 55
Protective conductor terminal, 34
Protective earth, 34

Q

QR code label, 82

R

Recalibration, 43
Repair, 41
Return procedure, 44

S

Safety, 11
    Instrument safety standards, 12
    Sensor installation, 23
Safety instructions
    Electrical connection, 33
Scope of delivery, 8
Sensor check, 47
Sensor orientation, 27
Service, 41, 43, 66, 82
Service and support
    Internet, 66, 82
Support, 43, 66, 82
Support request, 66, 82
System components, 19

T

Technical support, 66, 82
    partner, 66, 82
    personal contact, 66, 82
Test certificates, 11
Theory of operation, 20
Torques values, 29

V

Vertical Pipes, 27
Vibrations, 24

W

Warranty, 9
Weight, 63
Wire insulation, 34
Wiring, (See Electrical connection)