SIEMENS

SITRANS P

Pressure transmitter SITRANS P320/P420 with 4 to 20 mA/HART

Compact Operating Instructions

Getting started 1

Introduction 2

Safety instructions 3

Installing/mounting 4

Connecting 5

Commissioning 6

Service and maintenance 7

Technical data 8

Appendix A A

7MF03..-.....-.... (SITRANS P320)
7MF04..-.....-.... (SITRANS P420)

09/2018
A5E38874562-AB

Legal information

Warning notice system

This manual contains notices you have to observe in order to ensure your personal safety, as well as to prevent damage to property. The notices referring to your personal safety are highlighted in the manual by a safety alert symbol, notices referring only to property damage have no safety alert symbol. These notices shown below are graded according to the degree of danger.

⚠ DANGER
indicates that death or severe personal injury **will** result if proper precautions are not taken.

⚠ WARNING
indicates that death or severe personal injury **may** result if proper precautions are not taken.

⚠ CAUTION
indicates that minor personal injury can result if proper precautions are not taken.

NOTICE
indicates that property damage can result if proper precautions are not taken.

If more than one degree of danger is present, the warning notice representing the highest degree of danger will be used. A notice warning of injury to persons with a safety alert symbol may also include a warning relating to property damage.

Qualified Personnel

The product/system described in this documentation may be operated only by **personnel qualified** for the specific task in accordance with the relevant documentation, in particular its warning notices and safety instructions. Qualified personnel are those who, based on their training and experience, are capable of identifying risks and avoiding potential hazards when working with these products/systems.

Proper use of Siemens products

Note the following:

⚠ WARNING
Siemens products may only be used for the applications described in the catalog and in the relevant technical documentation. If products and components from other manufacturers are used, these must be recommended or approved by Siemens. Proper transport, storage, installation, assembly, commissioning, operation and maintenance are required to ensure that the products operate safely and without any problems. The permissible ambient conditions must be complied with. The information in the relevant documentation must be observed.

Trademarks

All names identified by ® are registered trademarks of Siemens AG. The remaining trademarks in this publication may be trademarks whose use by third parties for their own purposes could violate the rights of the owner.

Disclaimer of Liability

We have reviewed the contents of this publication to ensure consistency with the hardware and software described. Since variance cannot be precluded entirely, we cannot guarantee full consistency. However, the information in this publication is reviewed regularly and any necessary corrections are included in subsequent editions.

Siemens AG
Division Process Industries and Drives
Postfach 48 48
90026 NÜRNBERG
GERMANY

Document order number: A5E38874562
Ⓟ 09/2018 Subject to change

Copyright © Siemens AG 2018.
All rights reserved

Table of contents

1 Getting started....7

1.1 Commissioning the device without display....7

1.2 Commissioning the device with display....8

2 Introduction....11

2.1 Purpose of this documentation....11

2.2 Document history....11

2.3 Scope of validity of this document....11

2.4 Intended use....12

2.5 Product compatibility....13

2.6 Nameplate layout....14

2.7 Checking the consignment....16

2.8 Security information....16

2.9 Transportation and storage....17

2.10 Notes on warranty....17

3 Safety instructions....19

3.1 Precondition for use....19
3.1.1 Warning symbols on the device....19
3.1.2 Laws and directives....19
3.1.3 Conformity with European directives....20

3.2 Requirements for special applications....20

3.3 Use in hazardous areas....21

4 Installing/mounting....23

4.1 Basic safety instructions....23
4.1.1 Installation location requirements....26
4.1.1.1 Devices with marine approval....26
4.1.2 Proper mounting....27

4.2 Installation (except level)....27
4.2.1 Installation configuration....27
4.2.2 Installation (except level)....28
4.2.3 Fastening with the mounting bracket....29

4.3 Installation (level)....30
4.3.1 Mounting on the container....31

4.4 Removing....35

5 Connecting....37

5.1 Basic safety instructions....37

5.2 Connecting the device....41
5.2.1 Opening the device....41
5.2.2 Connecting the device....42
5.2.3 Closing the device....43

6 Commissioning....45

6.1 Basic safety instructions....45

6.2 Switching on the supply voltage....46

6.3 Commissioning the device....47

6.4 gauge pressure, absolute pressure from the differential pressure series and absolute pressure from the gauge pressure series....47
6.4.1 Commissioning for gases....47
6.4.2 Commissioning with steam or liquid....49

6.5 Differential pressure and flow rate....50
6.5.1 Commissioning in gaseous environments....50
6.5.2 Commissioning for liquids....52
6.5.3 Commissioning with vapor....53

7 Service and maintenance....57

7.1 Basic safety instructions....57

7.2 Cleaning....58
7.2.1 Servicing the remote seal measuring system....58

7.3 Maintenance and repair work....58
7.3.1 Defining the maintenance interval....59
7.3.2 Checking the gaskets....60
7.3.3 Diagnostics messages....61

7.4 Return procedure....61

7.5 Disposal....61

8 Technical data....63

8.1 Input....63
8.1.1 Gauge pressure....63
8.1.2 Gauge pressure with front-flush diaphragm....64
8.1.3 Gauge pressure from the differential pressure series....65
8.1.4 Absolute pressure from the gauge pressure series....66
8.1.5 Absolute pressure with front-flush diaphragm....67
8.1.6 Absolute pressure from the differential pressure series....68
8.1.7 Differential pressure and flow....69
8.1.8 Level....70

8.2 Measuring accuracy of SITRANS P320....71
8.2.1 Reference conditions....71
8.2.2 Effect of auxiliary power supply....71
8.2.3 Gauge pressure....71
8.2.4 Gauge pressure from the differential pressure series....73

8.2.5 Absolute pressure from gauge and differential pressure series....74
8.2.6 Absolute pressure with front-flush diaphragm....75
8.2.7 Gauge pressure with front-flush diaphragm....76
8.2.8 Differential pressure and flow....77
8.2.9 Level....80

8.3 Measuring accuracy of SITRANS P420....81
8.3.1 Reference conditions....81
8.3.2 Effect of auxiliary power supply....81
8.3.3 Gauge pressure....81
8.3.4 Gauge pressure from the differential pressure series....82
8.3.5 Absolute pressure from gauge and differential pressure series....84
8.3.6 Absolute pressure with front-flush diaphragm....85
8.3.7 Gauge pressure with front-flush diaphragm....86
8.3.8 Differential pressure and flow....86
8.3.9 Level....90

8.4 Operating conditions....91

8.5 Vibration resistance....95

8.6 Construction....97

8.7 Torques....101

8.8 Display, keyboard and auxiliary power....101

8.9 Certificates and approvals....102

A Appendix A....105

A.1 Technical support....105

A.2 Certificates....106

Index....107

Getting started

1

1.1 Commissioning the device without display

Introduction

In this section, you will learn how to commission the device step-by-step.

Before you start, please read the following safety information:

- General safety information (Page 19)
- Basic safety information: Installing/mounting (Page 23)
- Basic safety information: Connecting (Page 37)
- Basic safety information: Commissioning (Page 45)

Read the entire device manual in order to achieve the optimum performance of the device.

Procedure

1. Mount the device.
   Installation (except level) (Page 27)
   Installation (level) (Page 30)
2. Connect the device.
   Connecting the device (Page 41)
3. Switch on the power supply.
   Switching on the supply voltage (Page 46)

4. Open the cover of the buttons:

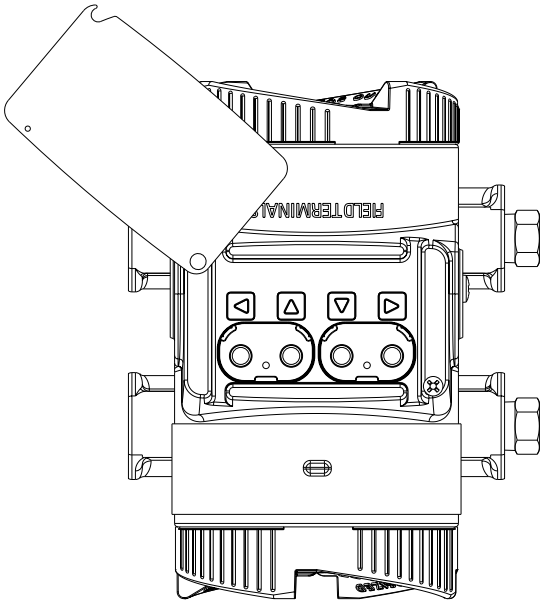

Figure 1-1 Top view

5. Operate the buttons as follows:

Apply lower range value (with pressure applied)	Hold down the button ▼ for 3 seconds.
Apply upper range value (with pressure applied)	Hold down the button ▲ for 3 seconds.
Zero point adjustment	Hold down the buttons ▲ and ▼ for 3 seconds.
Set Upper fault current	Hold down the button ◀ for 3 seconds.
Set Lower fault current	Hold down the button ▶ for 3 seconds.

Further functions are available via remote operation (e.g. SIMATIC PDM).

1.2 Commissioning the device with display

Introduction

In this section, you will learn how to commission the device step-by-step.

Before you start, please read the following safety information:

- General safety information (Page 19)
- Basic safety information: Installing/mounting (Page 23)
- Basic safety information: Connecting (Page 37)
- Basic safety information: Commissioning (Page 45)

Read the entire device manual in order to achieve the optimum performance of the device.

Procedure

1. Mount the device.
   Installation (except level) (Page 27)
   Installation (level) (Page 30)
2. Connect the device.
   Connecting the device (Page 41)
3. Switch on the power supply.
   Switching on the supply voltage (Page 46)
4. Open the cover of the buttons:
5. Further functions can be found in the operating instructions.
   - Set the measuring range.
   - Set the pressure unit.
   - Set the application of your device.
   - Set the scaling points.
   - Set the zero point.
   - Lock the device.
   - Enable Functional Safety (for devices with Functional Safety).

Introduction 2

2.1 Purpose of this documentation

These instructions are a brief summary of important features, functions and safety information, and contain all information required for safe use of the device. Read the instructions carefully prior to installation and commissioning. In order to use the device correctly, first review its principle of operation.

The instructions are aimed at persons who install and commission the device.

To realize optimum performance from the device, read the complete operating instructions.

2.2 Document history

The overview below summarizes the most important changes in the documentation when compared to the previous edition.

Edition	Note
09/2018	• Section Getting started (Page 7) added. • Basic safety instructions in the sections Use in hazardous areas (Page 21), Installing/mounting (Page 23), Connecting (Page 37) updated. • Section Connecting the device (Page 42) updated. • Section Vibration resistance (Page 95) updated.
06/2018	First edition

2.3 Scope of validity of this document

Variant	SITRANS P320 mA/HART	SITRANS P420 mA/HART
Gauge pressure	7MF0300	7MF0400
Gauge pressure from the differential pressure series	7MF0310	7MF0410
Absolute pressure from the gauge pressure series	7MF0320	7MF0420
Absolute pressure from the differential pressure series	7MF0330	7MF0430
Differential pressure and flow rate, PN 160 (MAWP 2320 psi)	7MF0340	7MF0440
Differential pressure and flow rate, PN 420 (MAWP 6092 psi)	7MF0350	7MF0450
Level	7MF0360	7MF0460

2.4 Intended use

Overview

Depending on the variant, the pressure transmitter measures corrosive, non-corrosive and hazardous gases, vapors and liquids.

You can use the pressure transmitter for the following measuring tasks:

- Gauge pressure
- Absolute pressure
- Differential pressure

With the appropriate configuration and the necessary add-on parts (e.g. limiters and remote seals), you can also use the pressure transmitter for the following measuring tasks:

- Level
- Volume flow
- Mass flow
- Volume
- Customized characteristic curve

The output signal for all measuring tasks is a direct current of 4 to 20 mA.

You can install the "intrinsically-safe" or "flameproof enclosure" version of the pressure transmitter in hazardous areas. The devices have a test certification and comply with the corresponding directives.

Pressure transmitters with remote seals of various shapes can be provided for special applications. For example, measuring high-viscosity substances is a special application.

Operate the device in accordance with the specifications in section Technical data (Page 63).

2.5 Product compatibility

The following table describes the compatibility between the edition of this manual, the device revision, the engineering system and the associated EDD.

Edition	Comments	Product compatibility	Compatibility with device integration package
09/2018	Manual revised	HART 7 FW: 1.00.08 or higher HW: 1.00.00 or higher	SIMATIC PDM V9.0 or higher AMS Device Manager V13 or higher DTM Pactware V4.1 SP4 FC475 V3.9 or higher
06/2018	First edition	HART 7 FW: 1.00.08 or higher HW: 1.00.00 or higher	SIMATIC PDM V9.0 or higher AMS Device Manager V13 or higher DTM Pactware V4.1 SP4 FC475 V3.9 or higher

2.6 Nameplate layout

Nameplate with general information

The nameplate with the article number and other important information, such as design details and technical data, is located on the cover over the buttons.

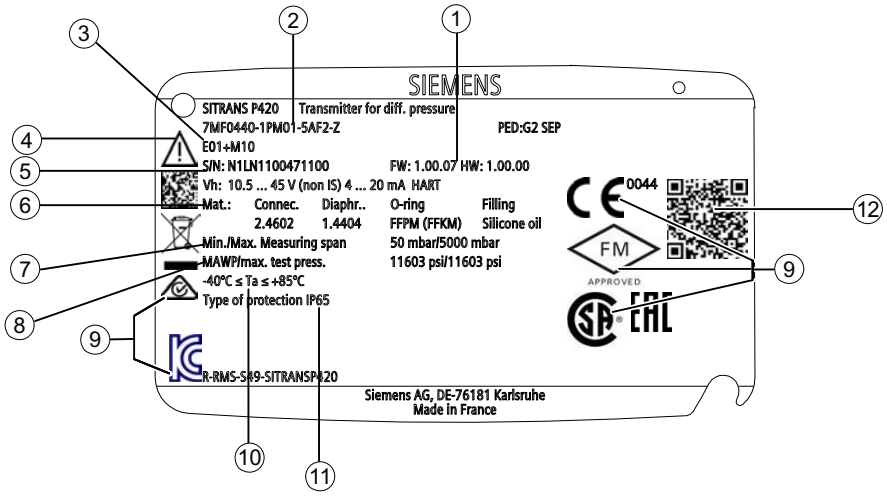

① Firmware and hardware identification

② Article number (MLFB number)

③ Order supplement (order code)

④ Note operating instructions, certificates and approvals

⑤ Serial number

⑥ Materials, connection, diaphragm, O-ring, oil

⑦ Minimum/maximum measuring span

⑧ Maximum allowable operating pressure / maximum allowable test pressure

⑨ Conformity with country-specific directives

⑩ Permitted ambient temperature for the hazardous area of the corresponding temperature class

⑪ Protection class

⑫ QR code to the mobile website with device-specific information

Figure 2-1 Example

Nameplate with approval information

The nameplate with approval information is located on the front of the enclosure.

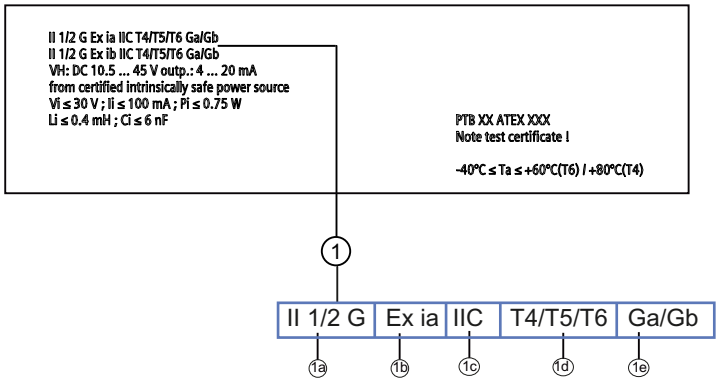

1a Characteristics of the hazardous area

1b Type of protection

1c Group (gas, dust)

1d Maximum surface temperature (temperature class)

1e Device protection level

Figure 2-2 Example

Measuring point label

The measuring point label is fastened with a wire under the front cover.

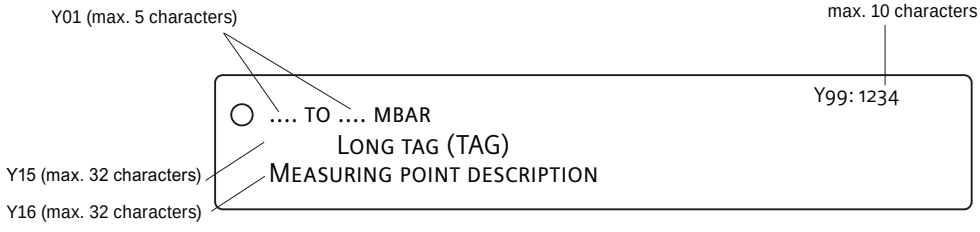

Figure 2-3 Example

Nameplate with information on the remote seals

The nameplate with information on the remote seals is located on the back of the enclosure.

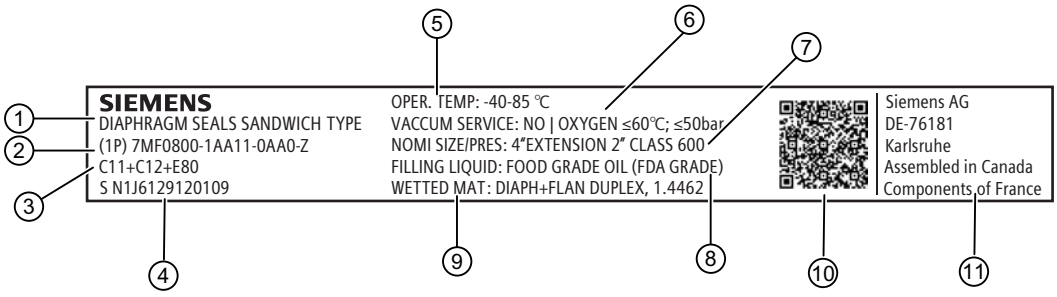

① Diaphragm remote seals of sandwich type

② Article number (MLFB number)

③ Order supplement (order code)

④ Serial number

⑤ Operating temperature

⑥ Vacuum service: No, oxygen ≤ 60 °C; ≤ 50 bar

⑦ Nominal diameter/nominal pressure: 4 inch, 50 mm tube length, CLASS 600

⑧ Filling liquid: Food grade oil (FDA-compliant)

⑨ Wetted materials: Diaphragm duplex, 1.4462

⑩ QR code for mobile website with device-specific information

⑪ Assembly and manufacturing location

Figure 2-4 Example

2.7 Checking the consignment

1. Check the packaging and the delivered items for visible damages.
2. Report any claims for damages immediately to the shipping company.
3. Retain damaged parts for clarification.
4. Check the scope of delivery by comparing your order to the shipping documents for correctness and completeness.

⚠ WARNING

Using a damaged or incomplete device

Risk of explosion in hazardous areas.

- Do not use damaged or incomplete devices.

2.8 Security information

Siemens provides products and solutions with industrial security functions that support the secure operation of plants, systems, machines, and networks.

In order to protect plants, systems, machines and networks against cyber threats, it is necessary to implement – and continuously maintain – a holistic, state-of-the-art industrial security concept. Siemens' products and solutions only form one element of such a concept.

Customer is responsible to prevent unauthorized access to its plants, systems, machines and networks. Systems, machines and components should only be connected to the enterprise network or the internet if and to the extent necessary and with appropriate security measures (e.g. use of firewalls and network segmentation) in place.

Additionally, Siemens' guidance on appropriate security measures should be taken into account. You can find more information about industrial security by visiting: https://www.siemens.com/industrialsecurity.

Siemens' products and solutions undergo continuous development to make them more secure. Siemens strongly recommends you apply product updates as soon as available and always use the latest product versions. Use of product versions that are no longer supported, and failure to apply latest updates may increase customer's exposure to cyber threats.

To stay informed about product updates, subscribe to the Siemens Industrial Security RSS Feed under
https://www.siemens.com/industrialsecurity.

2.9 Transportation and storage

To guarantee sufficient protection during transport and storage, observe the following:

- Keep the original packaging for subsequent transportation.
- Devices/replacement parts should be returned in their original packaging.
- If the original packaging is no longer available, ensure that all shipments are properly packaged to provide sufficient protection during transport. Siemens cannot assume liability for any costs associated with transportation damages.

NOTICE
Insufficient protection during storage The packaging only provides limited protection against moisture and infiltration. • Provide additional packaging as necessary.

Special conditions for storage and transportation of the device are listed in Technical data (Page 63).

2.10 Notes on warranty

The contents of this manual shall not become part of or modify any prior or existing agreement, commitment or legal relationship. The sales contract contains all obligations on the part of Siemens as well as the complete and solely applicable warranty conditions. Any statements regarding device versions described in the manual do not create new warranties or modify the existing warranty.

The content reflects the technical status at the time of publishing. Siemens reserves the right to make technical changes in the course of further development.

Safety instructions 3

3.1 Precondition for use

This device left the factory in good working condition. In order to maintain this status and to ensure safe operation of the device, observe these instructions and all the specifications relevant to safety.

Observe the information and symbols on the device. Do not remove any information or symbols from the device. Always keep the information and symbols in a completely legible state.

3.1.1 Warning symbols on the device

Symbol	Explanation
	Consult operating instructions

3.1.2 Laws and directives

Observe the safety rules, provisions and laws applicable in your country during connection, assembly and operation. These include, for example:

- National Electrical Code (NEC - NFPA 70) (USA)
- Canadian Electrical Code (CEC) (Canada)

Further provisions for hazardous area applications are for example:

- IEC 60079-14 (international)
- EN 60079-14 (EU)

3.1.3 Conformity with European directives

The CE mark on the device is a sign of conformity with the following European directives:

Electromagnetic compatibility EMC 2014/30/EU	Directive of the European Parliament and of the Council on the harmonization of the laws of the Member States relating to electromagnetic compatibility
Atmosphère explosible ATEX 2014/34/EU	Directive of the European Parliament and the Council on the harmonization of the laws of the Member States concerning equipment and protective systems intended for use in potentially explosive atmospheres
Pressure Equipment Directive PED 2014/68/EU	Directive of the European Parliament and of the Council on the harmonization of the laws of the Member States relating to the making available on the market of pressure equipment

The directives applied can be found in the EU declaration of conformity for the associated device.

WARNING

Improper device modifications

Risk to personnel, system and environment can result from modifications to the device, particularly in hazardous areas.

- Only carry out modifications that are described in the instructions for the device. Failure to observe this requirement cancels the manufacturer's warranty and the product approvals.

3.2 Requirements for special applications

Due to the large number of possible applications, each detail of the described device versions for each possible scenario during commissioning, operation, maintenance or operation in systems cannot be considered in the instructions. If you need additional information not covered by these instructions, contact your local Siemens office or company representative.

Note

Operation under special ambient conditions

We highly recommend that you contact your Siemens representative or our application department before you operate the device under special ambient conditions as can be encountered in nuclear power plants or when the device is used for research and development purposes.

DANGER

Using equipment with approval-related restrictions

Risk of explosion, damage to property due to operating conditions not in conformity with the approval (e.g. temperature and pressure limits exceeded)

- Take note of the approval restrictions before using the device. You can find the information on this in the current certificates.

3.3 Use in hazardous areas

Qualified personnel for hazardous area applications

Persons who install, connect, commission, operate, and service the device in a hazardous area must have the following specific qualifications:

- They are authorized, trained or instructed in operating and maintaining devices and systems according to the safety regulations for electrical circuits, high pressures, aggressive, and hazardous media.
- They are authorized, trained, or instructed in carrying out work on electrical circuits for hazardous systems.
- They are trained or instructed in maintenance and use of appropriate safety equipment according to the pertinent safety regulations.

WARNING

Use in hazardous area

Risk of explosion.

- Only use equipment that is approved for use in the intended hazardous area and labelled accordingly.
- Don't use devices that have been operated outside the conditions secified for hazardous areas. If you have used the device outside the conditions for hazardous areas permanently make all Ex markings unrecognizable on the nameplate.

See also

Technical data (Page 63)

WARNING

Loss of safety of device with type of protection "Intrinsic safety Ex i"

If the device has already been operated in non-intrinsically safe circuits or the electrical specifications have not been observed, the safety of the device is no longer ensured for use in hazardous areas. There is a risk of explosion.

- Connect the device with type of protection "Intrinsic safety" solely to an intrinsically safe circuit.
- Observe the specifications for the electrical data on the certificate and/or in Technical data (Page 63).

WARNING

Use of incorrect device parts in potentially explosive environments

Devices and their associated device parts are either approved for different types of protection or they do not have explosion protection. There is a risk of explosion if device parts (such as covers) are used for devices with explosion protection that are not expressly suited for this type of protection. If you do not adhere to these guidelines, the test certificates and the manufacturer warranty will become null and void.

- Use only device parts that have been approved for the respective type of protection in the potentially explosive environment. Covers that are not suited for the "explosion-proof" type of protection are identified as such by a notice label attached to the inside of the cover with "Not Ex d Not SIL".
- Do not swap device parts unless the manufacturer specifically ensures compatibility of these parts.

WARNING

Use of the device with intrinsic safety "Ex i" type of protection in a polluted environment.

If you open the device on the display side, there is a risk of pollution. The safety of the device for use in hazardous areas is therefore no longer guaranteed. There is a danger of explosion.

- Ensure that the environment is clean before rotating or replacing the display.

WARNING

Incorrect material for the diaphragm in Zone 0

Risk of explosion in the hazardous area. If operated with intrinsically safe supply devices of category "ib" or devices of the flameproof enclosure version "Ex d" and simultaneous use in Zone 0, pressure transmitter explosion protection depends on the tightness of the diaphragm.

- Ensure that the material used for the diaphragm is suitable for the process medium. Refer to the information in the section "Technical data (Page 63)".

Installing/mounting 4

4.1 Basic safety instructions

DANGER

Pressure applications

Danger to personnel, system and environment will result from improper disassembly.

- Never attempt to loosen, remove, or disassemble process connection while vessel contents are under pressure.

WARNING

Wetted parts unsuitable for the process media

Risk of injury or damage to device.

Hot, toxic and corrosive media could be released if the process medium is unsuitable for the wetted parts.

- Ensure that the material of the device parts wetted by the process medium is suitable for the medium. Refer to the information in Technical data (Page 63).

WARNING

Unsuitable connecting parts

Risk of injury or poisoning.

In case of improper mounting, hot, toxic, and corrosive process media could be released at the connections.

- Ensure that connecting parts (such as flange gaskets and bolts) are suitable for connection and process media.

WARNING

Exceeded maximum permissible operating pressure

Risk of injury or poisoning.

The maximum permissible operating pressure depends on the device version, pressure limit and temperature rating. The device can be damaged if the operating pressure is exceeded. Hot, toxic and corrosive process media could be released.

Ensure that maximum permissible operating pressure of the device is not exceeded. Refer to the information on the nameplate and/or in Technical data (Page 63).

WARNING

Incorrect material for the diaphragm in Zone 0

Risk of explosion in the hazardous area. If operated with intrinsically safe supply devices of category "ib" or devices of the flameproof enclosure version "Ex d" and simultaneous use in Zone 0, pressure transmitter explosion protection depends on the tightness of the diaphragm.

- Ensure that the material used for the diaphragm is suitable for the process medium. Refer to the information in the section "Technical data (Page 63)".

WARNING

Loss of safety for devices with "flameproof enclosure" type of protection

Risk of explosion in hazardous areas. An explosion may be caused by hot gas escaping from the flameproof enclosure if there is too little space between it and fixed parts (e.g. walls, pipes).

- Ensure that there is a minimum clearance of at least 40 mm between the flameproof joints and the fixed parts.

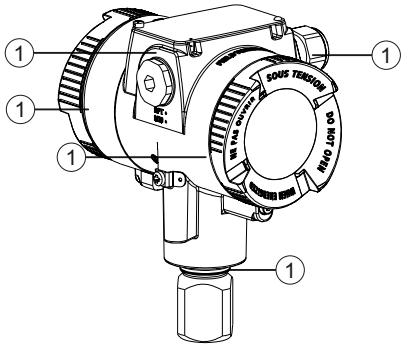

① Flameproof joint

WARNING

Vibrations in the plant

Risk of injury or damage to device.

Vibration leads to material fatigue, for example, cracks and weld seams breaks.

Hot, toxic and corrosive process media can emerge.

- Make sure that you have mounted the pressure transmitter (including accessories) protected against vibration.
  Refer to the information on vibration resistance in the section Technical specifications (Page 63).

CAUTION

Hot surfaces resulting from hot process media

Risk of burns resulting from surface temperatures above 65 °C (149 °F).

- Take appropriate protective measures, for example contact protection.
- Make sure that protective measures do not cause the maximum permissible ambient temperature to be exceeded. Refer to the information in Technical data (Page 63).

CAUTION

External stresses and loads

Damage to device by severe external stresses and loads (e.g. thermal expansion or pipe tension). Process media can be released.

- Prevent severe external stresses and loads from acting on the device.

Note

Material compatibility

Siemens can provide you with support concerning selection of sensor components wetted by process media. However, you are responsible for the selection of components. Siemens accepts no liability for faults or failures resulting from incompatible materials.

WARNING

Use in wrong environment

Risk of explosion in hazardous areas.

- Use the device only in an area with at least a pollution degree 2 according to IEC 60664-1.

WARNING

Using safety extra-low voltage for devices of the protection type "db", "ec", "time" or "time"

Risk of explosion in hazardous areas.

- Isolate the non-intrinsically safe circuit safely from ground, e.g.: through a SELV circuit.

4.1.1 Installation location requirements

WARNING

Insufficient air supply

The device may overheat if there is an insufficient supply of air.

- Install the device so that there is sufficient air supply in the room.
- Observe the maximum permissible ambient temperature. Refer to the information in the section Technical data (Page 63).

CAUTION

Aggressive atmospheres

Damage to device through penetration of aggressive vapors.

- Ensure that the device is suitable for the application.

NOTICE

Direct sunlight

Increased measuring errors.

- Protect the device from direct sunlight.

Make sure that the maximum ambient temperature is not exceeded. Refer to the information in the section Technical data (Page 63).

4.1.1.1 Devices with marine approval

Note

For vibrations in the direction of the measuring cell diaphragm, the measuring accuracy of the pressure transmitter with flush-mounted diaphragm can deviate no more than 0.2% from the respective specification.

- Install the device so that no or almost no vibrations occur in the direction of the diaphragms.
- To avoid measuring values that fluctuate strongly, use the damping function.

For information on vibration resistance, refer to the marine approval certificate.

4.1.2 Proper mounting

WARNING

Incorrect mounting at Zone 0

Risk of explosion in hazardous areas.

- Ensure sufficient tightness at the process connection.
- Observe the standard IEC/EN 60079-14.

CAUTION

Loss of type of protection

Damage to device if the enclosure is open or not properly closed. The type of protection specified on the nameplate or in Technical data (Page 63) is no longer guaranteed.

- Make sure that the device is securely closed.

NOTICE

Incorrect mounting

The device can be damaged, destroyed, or its functionality impaired through improper mounting.

- Before installing ensure there is no visible damage to the device.
- Make sure that process connectors are clean, and suitable gaskets and glands are used.
- Mount the device using suitable tools. Refer to the information in Technical data (Page 63).

NOTICE

Use of line and cable entries made of plastic in hazardous areas

Device damage caused by impact at temperatures below -20 °C.

- Make sure that the line and cable entries are protected from impacts.

4.2 Installation (except level)

4.2.1 Installation configuration

The pressure transmitter can be configured above or below the pressure sampling point. The recommended configuration depends on the aggregate state of the process medium.

Installation configuration for gases

Install the pressure transmitter above the pressure sampling point.

Lay the pressure tubing with a constant gradient to the pressure sampling point, so that any condensation produced can drain in the main line and thereby avoid corruption of the measured values.

Installation configuration for vapor and liquid

Install the pressure transmitter below the pressure sampling point.

Lay the pressure tubing with a constant gradient to the pressure sampling point so that any gas pockets can escape in the main line.

4.2.2 Installation (except level)

Mounting location

Verify that the mounting location meets the following conditions:

- Accessible
- Close to the measuring point
- Vibration-free
- Within the permitted ambient temperature values

Protect the pressure transmitter from:

- Direct heat radiation
- Rapid temperature fluctuations
- Heavy contamination
- Mechanical damage
- Direct sunlight

Requirement

- You have compared the desired operating data with the data on the nameplate.
- You have adhered to the information on the remote seal during its installation.

Procedure

1. Attach the pressure transmitter to the process connection.
   Use an appropriate tool (e.g. open-ended wrench with width across flats 36). Otherwise, the measuring cell may be damaged.
2. Turn only on the key area above the process connection.
   Caution: If you turn the pressure transmitter on the housing, the measuring cell may be damaged.
3. To guarantee secure and vibration-free installation of the pressure transmitter, fasten it to a mounting bracket (Page 29).

4.2.3 Fastening with the mounting bracket

Introduction

You mount the pressure transmitter with the mounting bracket as described below:

- On a mounting range
- On a vertical or horizontal pipe (Ø 50 to 60 mm)

When securing, observe the torques in the section Torques (Page 101).

Note

Install the device so that the pressure transmitter and the differential pressure lines are not subject to different vibrations. Otherwise there is a danger that the differential pressure lines will rupture.

Example 1: Pipe mounting of pressure transmitter (gauge pressure series)

The mounting bracket for the gauge pressure series includes, among other things:

- 2 screws
- One pipe clamp with nuts
- Washers

Mount the pressure transmitter as follows:

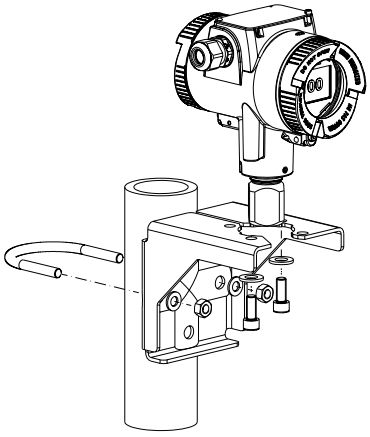

Example 2: Pipe mounting of pressure transmitter (differential pressure series)

The mounting bracket for the differential pressure series includes, among other things:

- 4 screws
- One pipe clamp with nuts
- Washers

You can then mount the pressure transmitter in different positions:

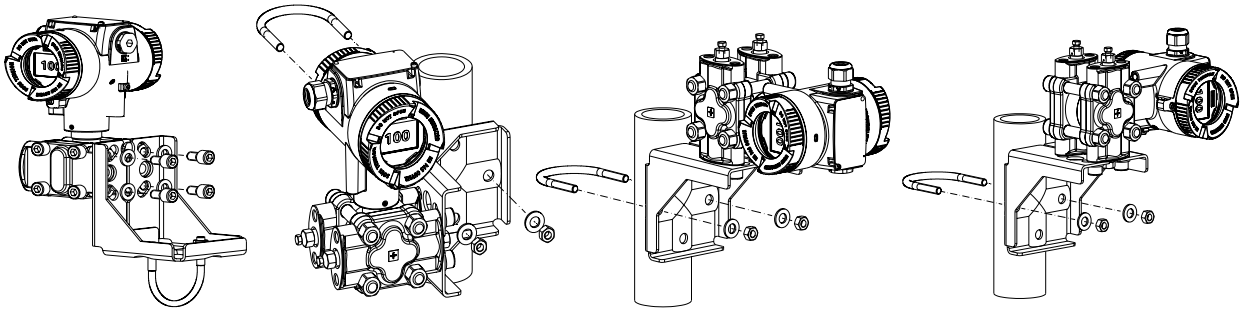

4.3 Installation (level)

Mounting location

Verify that the mounting location meets the following conditions:

- Accessible
- Close to the measuring point
- Vibration-free
- Within the permitted ambient temperature values

Protect the pressure transmitter from:

- Direct heat radiation
- Rapid temperature fluctuations
- Heavy contamination
- Mechanical damage
- Direct sunlight

Note

Select the height of the mounting flange such that the pressure transmitter is always mounted below the lowest fill height to be measured.

Requirement

- You have compared the desired operating data with the data on the nameplate.
- You have adhered to the information on the remote seal during its installation.

Procedure

To install the pressure transmitter for level, proceed as follows:

1. Attach the seal to the container's mating flange.
   Ensure that the seal is centrally positioned and that it does not restrict the movement of the flange's seal diaphragm in any way. Otherwise, the seal of the process connection is not guaranteed to be tight.
2. Screw on the pressure transmitter's flange.
3. Observe the installation position.

4.3.1 Mounting on the container

Mounting on open container

A line is not required when taking measurements in an open container since the negative side is connected with the atmosphere.

Ensure that no dirt enters the open connection ports.

- Use, for example, threaded plug with vent valve 7MF4997-1CP.

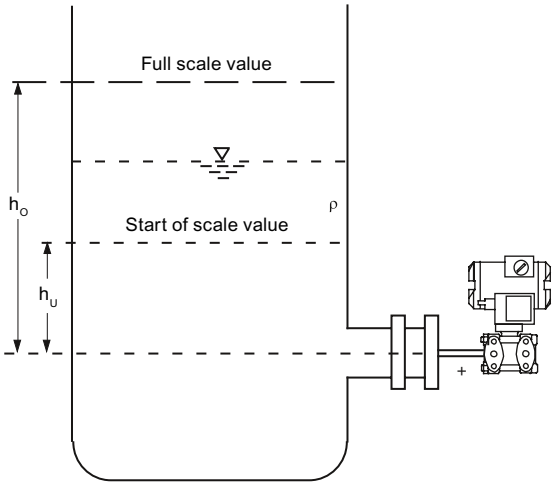

Measurement assembly on an open container

Formula:

Lower range value: $p_{MA} = \rho \cdot g \cdot h_U$

Upper range value: $p_{ME} = \rho \cdot g \cdot h_O$

h_U	Lower filling level	Δp_{MA}	Lower range value
h_O	Upper filling level	Δp_{ME}	Upper range value
p	Pressure	ρ	Density of the measured medium in the container
		g	Acceleration due to gravity

Mounting on closed container

When taking measurements in a closed container without or with little condensate formation, the negative pressure line is not filled.

Lay the line in such a way that condensation pockets do not form. If required, you need to install a condensation container below the negative pressure line of the pressure transmitter.

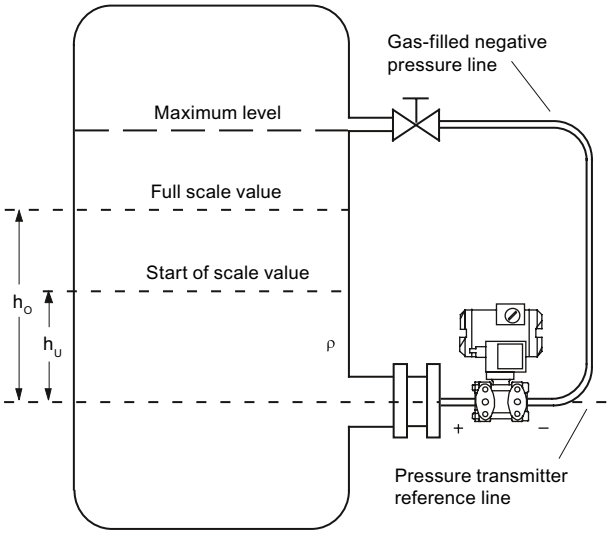

Measurement assembly on a closed container (no or little condensate separation)

Formula:

Lower range value: $\Delta p_{MA} = \rho \cdot g \cdot h_U$

Upper range value: $\Delta p_{ME} = \rho \cdot g \cdot h_O$

h_U	Lower filling level	Δp_{MA}	Lower range value
h_O	Upper filling level	Δp_{ME}	Upper range value
p	Pressure	ρ	Density of the measured medium in the container
		g	Acceleration due to gravity

When taking measurements in a closed container with strong condensate formation, you must fill the negative pressure line (mostly with the condensate of the measured medium) and install a condensate pot. Lock the device using the dual pneumatic block 7MF9017-..A.

To compensate the liquid column on the minus side, reset the zero point.

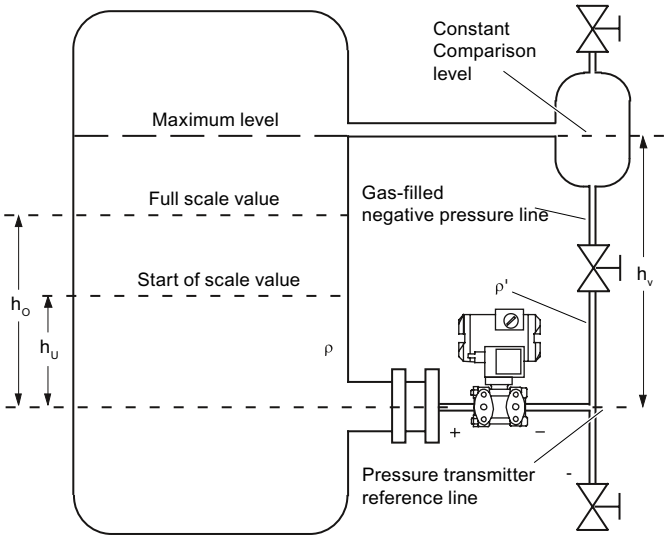

Formula:

Lower range value:
$\Delta p_{MA} = g \cdot (h_U \cdot \rho - h_V \cdot \rho')$

Upper range value:
$\Delta p_{MA} = g \cdot (h_O \cdot \rho - h_V \cdot \rho')$

Measurement assembly on a closed container (strong condensate formation)

h_U	Lower filling level	Δp_{MA}	Lower range value
h_O	Upper filling level	Δp_{ME}	Upper range value
h_V	Gland distance	ρ	Density of the measured medium in the container
p	Pressure	ρ '	Density of fluid in the negative pressure line corresponds to the prevailing temperature there
		g	Acceleration due to gravity

The process connection on the negative side is a female thread $^1/_4$-18 NPT or an oval flange.

Lay the line for the negative pressure using a seamless steel tube 12 mm x 1.5 mm.

4.4 Removing

WARNING

Incorrect disassembly

The following risks may result from incorrect disassembly:

- Injury through electric shock

- Risk through emerging media when connected to the process

- Risk of explosion in hazardous area

In order to disassemble correctly, observe the following:

- Before starting work, make sure that you have switched off all physical variables such as pressure, temperature, electricity etc. or that they have a harmless value.
- If the device contains hazardous media, it must be emptied prior to disassembly. Make sure that no environmentally hazardous media are released.
- Secure the remaining connections so that no damage can result if the process is started unintentionally.

Connecting 5

5.1 Basic safety instructions

WARNING

Unsuitable cables, cable glands and/or plugs

Risk of explosion in hazardous areas.

- Use only cable glands/plugs that comply with the requirements for the relevant type of protection.
- Tighten the cable glands in accordance with the torques specified in Technical data (Page 63).
- Close unused cable inlets for the electrical connections.
- When replacing cable, glands use only cable glands of the same type.
- After installation, check that the cables are seated firmly.

WARNING

Incorrect conduit system

Risk of explosion in hazardous areas as result of open cable inlet or incorrect conduit system.

- In the case of a conduit system, mount a spark barrier at a defined distance from the device input. Observe national regulations and the requirements stated in the relevant approvals.

WARNING

Unprotected cable ends

Risk of explosion through unprotected cable ends in hazardous areas.

- Protect unused cable ends in accordance with IEC/EN 60079-14.

WARNING

Lack of equipotential bonding

Danger of explosion through compensating currents or ignition currents through lack of equipotential bonding.

For devices of intrinsic safety "db", "ec", "tb" or "tc" which are operated in a non-intrinsically safe circuit, observe the following:

- Connect the device to the system via the equipotential bonding terminal.

Note: For devices of the intrinsic safety "ia", "ib" and "ic" type of protection, which are operated in an intrinsically safe circuit, connection to the system via the equipotential bonding terminal is not required.

WARNING

Improper laying of shielded cables

Risk of explosion through compensating currents between hazardous area and the non-hazardous area.

- Shielded cables that cross into hazardous areas should be grounded only at one end.
- If grounding is required at both ends, use an equipotential bonding conductor.

WARNING

Connecting device in energized state

Risk of explosion in hazardous areas.

- Connect devices in hazardous areas only in a de-energized state.

Exceptions:

- Devices having the type of protection "Intrinsic safety Ex i" may also be connected in energized state in hazardous areas.
- Exceptions for type of protection "Increased safety ec" (Zone 2) are regulated in the relevant certificate.

WARNING

Incorrect selection of type of protection

Risk of explosion in hazardous areas.

This device is approved for various types of protection.

1. Select an intrinsic safety type of protection "ia", "ib", "ic" or non-intrinsic safety "db", "tb", "tc", "ec".

2. Connect the device according to the selected type of protection.

3. When operating with non-intrinsically safe power supplies, make the intrinsically safe types of protection permanently unrecognizable as in the example.

II 1/2G Ex ia IIC T4/T6 Ga/Gb
~~II 1/2G Ex ia/db IIC T4/T6 Ga/Gb-~~

Figure 5-1 Example: Type 7MF0..0-.....-.D..-Z + E20

NOTICE

Ambient temperature too high

Damage to cable sheath.

- At an ambient temperature ≥ 60 °C (140 °F), use heat-resistant cables suitable for an ambient temperature at least 20 °C (36 °F) higher.

NOTICE

Condensation in the device

Damage to device through formation of condensation if the temperature difference between transportation or storage and the mounting location exceeds 20 °C (36 °F).

- Before taking the device into operation let the device adapt for several hours in the new environment.

NOTICE

Incorrect measured values with incorrect grounding

The device must not be grounded using the "+" connection. It may otherwise malfunction and be permanently damaged.

- If necessary, ground the device using the "-" connection.

Note

Electromagnetic compatibility (EMC)

You can use this device in industrial environments, households and small businesses.

For metal housings there is an increased electromagnetic compatibility compared to high-frequency radiation. This protection can be increased by grounding the housing, see Technical data (Page 63).

Note

Improvement of interference immunity

- Lay signal cables separate from cables with voltages > 60 V.
- Use cables with twisted wires.
- Keep device and cables at a distance from strong electromagnetic fields.
- Take account of the conditions for communication specified in the Technical data (Page 63).
- Use shielded cables to guarantee the full specification according to HART/PA/FF.

5.2 Connecting the device

5.2.1 Opening the device

Procedure

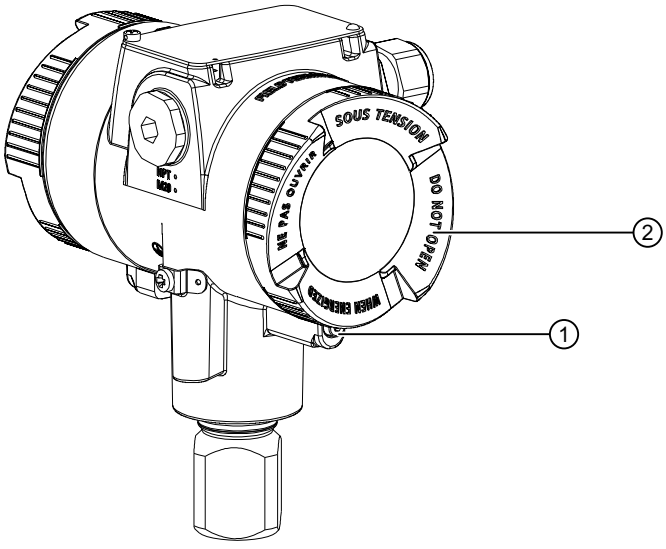

① Safety catch (optional)

② Cover of the electrical cable compartment.

Figure 5-2 Rear view of pressure transmitter

1. Use a 3 mm Allen key to loosen the safety catch ①.
2. Unscrew the cover of the electrical cable compartment ②.

5.2.2 Connecting the device

Procedure

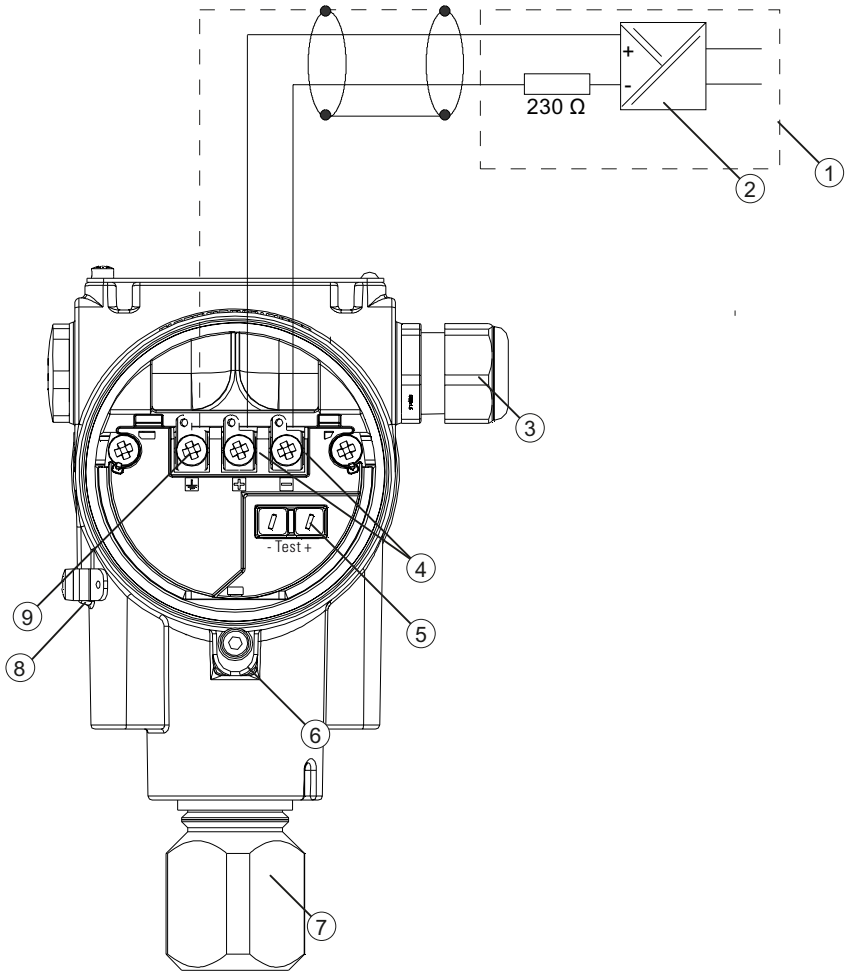

① Feed separator with integrated load
② Supply voltage
③ Cable gland
④ Connecting terminals
⑤ Test connector for DC measuring device
⑥ Safety catch
⑦ Process connection
⑧ Protective conductor connector/ equipotential bonding terminal
⑨ Ground terminal

Figure 5-3 Example: Electrical connection with feed separator

1. Connect the device to the system via the existing protective ground connection ⑧ by observing the torques.
   – Use a cable with a diameter of 1 … 4 mm^2.
2. Insert the connecting cable through the cable gland ③.

3. Connect the wires to the connection terminals ④ "+" and "-", observing the polarity and the torques.
   – Use wires with a diameter of 0.5 ... 2.5 mm^2.
   – If you use stranded wire used, you need a ferrule.
4. Apply the shield to the screw of the ground terminal ⑨.
   The screw of the ground terminal is electrically connected to the external protective conductor connection.

NOTICE
Incorrect measured values with incorrect grounding The device must not be grounded using the "+" connection. It may otherwise malfunction and be permanently damaged. • If necessary, ground the device using the "-" connection.

See also

Torques (Page 101)

5.2.3 Closing the device

Procedure

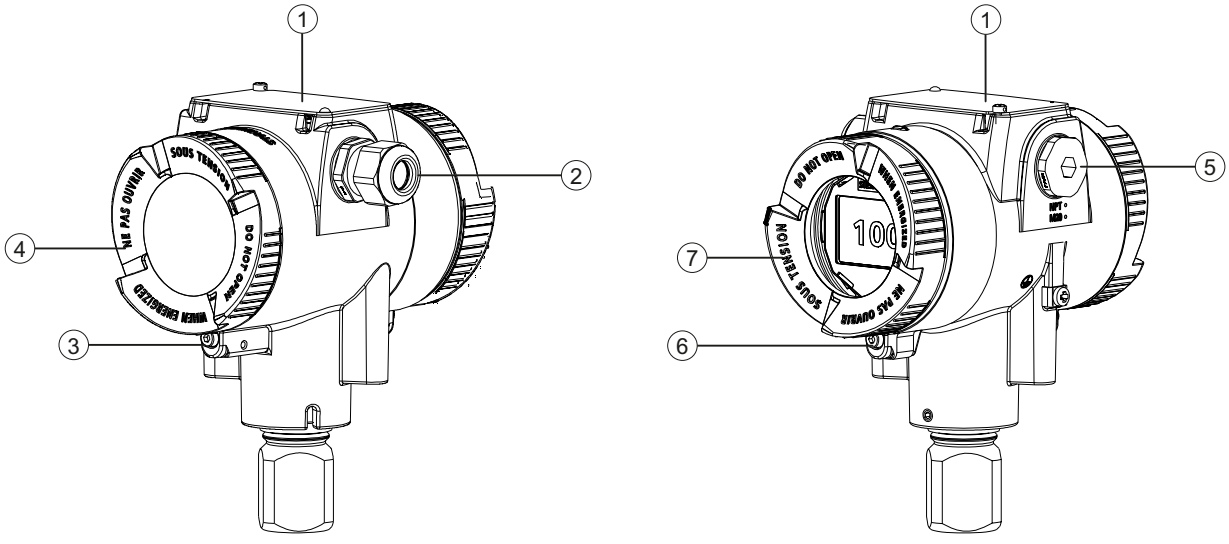

① Cover over buttons
② Cable gland
③ Safety catch (back)
④ Cover (rear) for electrical terminal compartment
⑤ Blanking plug
⑥ Safety catch (front)
⑦ Cover (front), optionally with inspection window

Figure 5-4 View of the pressure transmitter: Left: Back right: Front view

1. Screw on the cover ④ and ⑦ as far as it will go.
   Make sure that there is no gap between enclosure and cover.
2. Secure each cover with the cover catch ③ and ⑥ by removing the screw.
3. Close the cover over the buttons①.
4. Tighten the screw for the cover over the buttons.
5. Check the tightness of the blanking plug ⑤ and cable gland ② in accordance with the degree of protection.

Commissioning 6

6.1 Basic safety instructions

DANGER

Toxic gases and liquids

Danger of poisoning when venting the device: if toxic process media are measured, toxic gases and liquids can be released.

- Before venting ensure that there are no toxic gases or liquids in the device, or take the appropriate safety measures.

WARNING

Improper commissioning in hazardous areas

Device failure or risk of explosion in hazardous areas.

- Do not commission the device until it has been mounted completely and connected in accordance with the information in Technical data (Page 63).
- Before commissioning take the effect on other devices in the system into account.

WARNING

Commissioning and operation with pending error

If an error message appears, correct operation in the process is no longer guaranteed.

- Check the gravity of the error.
- Correct the error.
- If the error still exists:
  - Take the device out of operation.
  - Prevent renewed commissioning.

WARNING

Loss of explosion protection

Risk of explosion in hazardous areas if the device is open or not properly closed.

- Close the device as described in Connecting (Page 35).

WARNING

Opening device in energized state

Risk of explosion in hazardous areas

- Only open the device in a de-energized state.
- Check prior to commissioning that the cover, cover locks, and cable inlets are assembled in accordance with the directives.

Exception: Devices having the type of protection "Intrinsic safety Ex i" may also be opened in energized state in hazardous areas.

WARNING

Hazardous contact voltage

Risk of injury through hazardous contact voltage when the device is open or not completely closed.

The degree of protection specified on the nameplate or in Technical data (Page 63) is no longer guaranteed if the device is open or not properly closed.

- Make sure that the device is securely closed.

Note

Hot surfaces

Hot process medium and high ambient temperatures lead to hot surfaces which can cause burns.

- Take corresponding protective measures, for example wear protective gloves.

6.2 Switching on the supply voltage

Requirement

- You have connected the device correctly.
- The terminal voltage on the device is correct. (Page 101)

Procedure

Switch on the power supply.

- Product name and firmware version appear briefly on the display.
- The measured values are shown on the display.
  For a device without a display, you read off the current output as follows:
  - Over the remote control (e.g. SIMATIC PDM).
  - With a DC current measuring device.
    Connecting the device (Page 40)

Result

The device is now ready for operation.

6.3 Commissioning the device

Ensure that the operating data matches the values specified on the nameplate.

The parameters for damping, characteristic curve, start of scale value/full scale value and fault current must agree with the settings of the measuring point.

You can find more detailed information on operation and configuration in the operating instructions.

The following commissioning cases are typical examples. Configurations different from those listed here may be useful depending on the system configuration.

6.4 gauge pressure, absolute pressure from the differential pressure series and absolute pressure from the gauge pressure series

6.4.1 Commissioning for gases

Requirement

All valves are closed.

Procedure

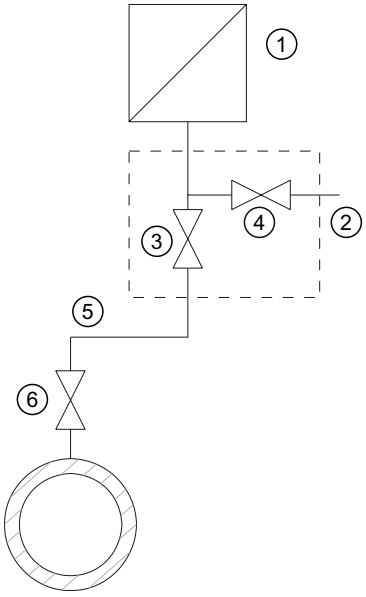

Example: Measuring gases above the pressure tapping point

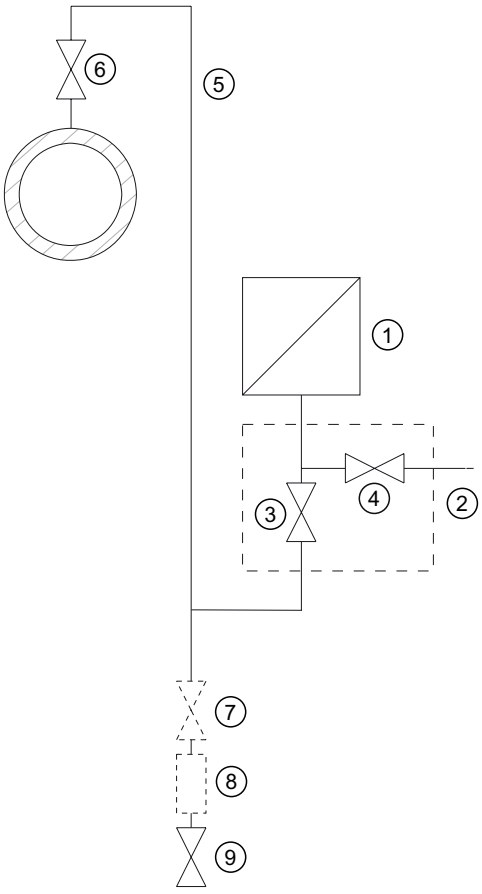

Example: Measuring gases below the pressure tapping point

① Pressure transmitter
② Shut-off valve
③ Shut-off valve to process
④ Shut-off valve for test connection or for bleed screw
⑤ Pressure line
⑥ Shut-off valve
⑦ Shut-off valve (optional)
⑧ Condensate vessel (optional)
⑨ Blowout valve

To commission the pressure transmitter for gases, proceed as follows:

1. Open the shut-off valve for the test connection ④.
2. Via the test connection of the shut-off valve ②, apply the pressure corresponding to the start of scale value to the pressure transmitter.
3. Ensure that the lower range value corresponds to the desired value. Otherwise, correct the value.
4. Close the shut-off valve for the test connection ④.

5. Open the shut-off valve ⑥ at the pressure tapping point.
6. Open the shut-off valve for the process ③.

6.4.2 Commissioning with steam or liquid

Requirement

All valves are closed.

Procedure

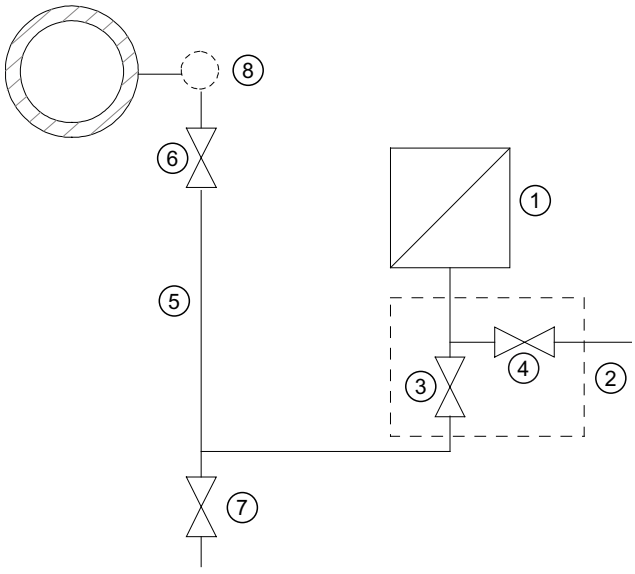

① Pressure transmitter
② Shut-off valve
③ Shut-off valve to process
④ Shut-off valve for test connection or for bleed screw
⑤ Pressure line
⑥ Shut-off valve
⑦ Drain valve
⑧ Compensation vessel (steam only)

To commission the pressure transmitter for steam or liquid, proceed as follows:

1. Open the shut-off valve for the test connection ④.
2. Via the test connection of the shut-off valve ②, apply the pressure corresponding to the start of scale value to the pressure transmitter.
3. Ensure that the lower range value corresponds to the desired value. Otherwise, correct the value.
4. Close the shut-off valve for the test connection ④.

5. Open the shut-off valve ⑥ at the pressure tapping point.
6. Open the shut-off valve for the process ③.

6.5 Differential pressure and flow rate

WARNING

Incorrect or improper operation

If the lock screws are missing or are not sufficiently tight, and/or if the valves are operated incorrectly or improperly, it could lead to serious physical injuries or considerable damage to property.

Measure

- Make sure that the lock screws and/or the vent valve are screwed in and fully tightened.
- Operate the valves properly.

6.5.1 Commissioning in gaseous environments

Requirement

All shut-off valves are closed.

Procedure

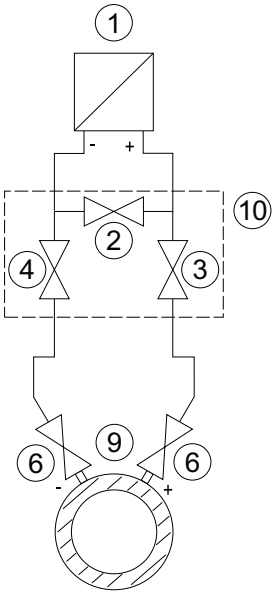

Pressure transmitter above the differential pressure transducer

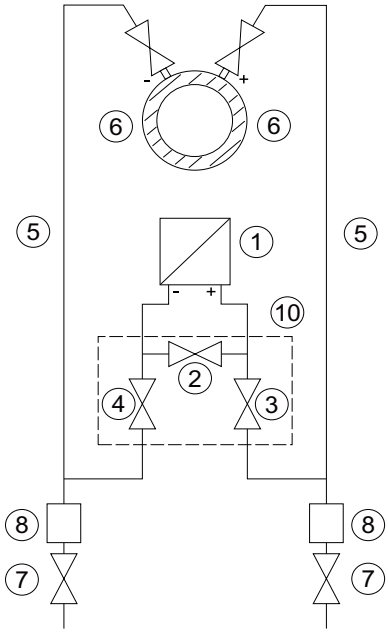

Pressure transmitter below the differential pressure transducer

①	Pressure transmitter	⑦	Blowout valves
②	Stabilizing valve	⑧	Condensate vessels (optional)
③, ④	Differential pressure valves	⑨	Differential pressure transducer
⑤	Differential pressure lines	⑩	3-way valve manifold
⑥	Shut-off valves		

To commission the pressure transmitter for gases, proceed as follows:

1. Open both the shut-off valves ⑥ at the pressure tapping point.
2. Open the stabilizing valve ②.
3. Open the differential pressure valve (③ or ④).
4. Check and, if necessary, correct the zero point when the start-of-scale value is 0 bar (4 mA).
5. Close the stabilizing valve ②.
6. Open the other differential pressure valve (③ or ④).

6.5.2 Commissioning for liquids

Requirement

All valves are closed.

DANGER

Toxic liquids

Danger of poisoning when the device is vented.

If toxic process media are measured with this device, toxic liquids can escape when the device is vented.

- Before venting, make sure there is no liquid in the device or take the necessary safety precautions.

Procedure

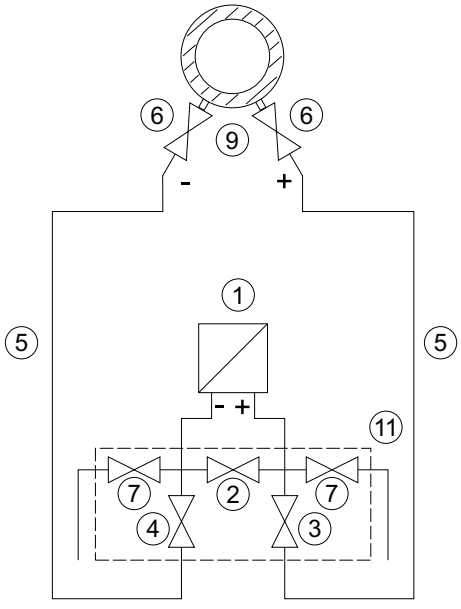

Pressure transmitter below thedifferential pressure transducer

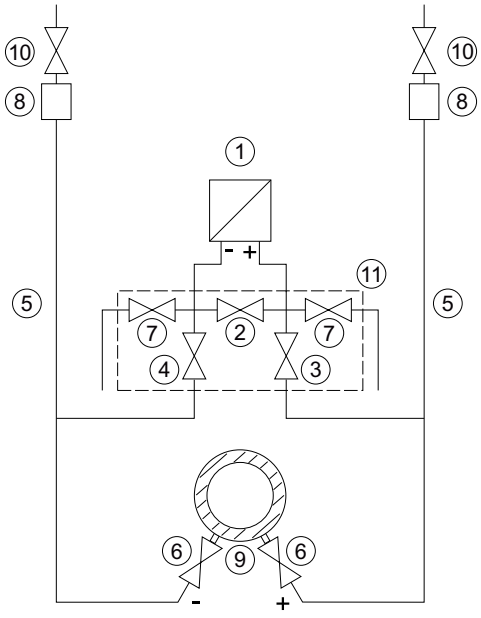

Pressure transmitter above the differential pressure transducer

① Pressure transmitter
② Stabilizing valve
③, ④ Differential pressure valves
⑤ Differential pressure lines
⑥ Shut-off valves
⑦ Drain valves
⑧ Gas collector vessels (optional)
⑨ Differential pressure transducer
⑩ Vent valves
⑪ 5-way valve manifold

To commission the pressure transmitter for liquids, proceed as follows:

1. Open both the shut-off valves ⑥ at the pressure tapping point.
2. Open the stabilizing valve ②.
3. With **pressure transmitters below the differential pressure transducer**, partially open both drain valves ⑦ one after the other until liquid emerges without bubbles.
   In the case of a **pressure transmitter above the differential pressure transducer**, partially open both vent valves ⑩ one after the other until liquid emerges without bubbles.
4. Close both drain valves ⑦ or vent valves ⑩.
5. Partially open the differential pressure valve ③ and the vent valve (sealing plug with vent valve) on the positive side of the pressure transmitter until liquid escapes without bubbles.
6. Close the vent valve (sealing plug with vent valve).
7. Partially open the vent valve (sealing plug with vent valve) on the negative side of the pressure transmitter until liquid escapes without bubbles.
8. Close the differential pressure valve ③.
9. Partially open the differential pressure valve ④ until liquid escapes without bubbles.
10. Close the differential pressure valve.
11. Close the vent valve (sealing plug with vent valve) on the negative side of the pressure transmitter.
12. Open the differential pressure valve ③ with half a revolution.
13. For a lower range value of 0 bar, check the zero point (4 mA) and correct the lower range value if it is different.
14. Close the stabilizing valve ②.
15. Open the differential pressure valves (③ and ④) completely.

6.5.3 Commissioning with vapor

Requirement

All valves are closed.

⚠ WARNING

Hot vapor

Danger of injury or damage to device.

If the shut-off valves ⑥ and the differential pressure valve ③ are both open and the stabilizing valve ② is then opened, the pressure transmitter ① can be damaged by the flow of vapor.

- Follow the specified procedure for commissioning.

WARNING

Hot vapor

Danger of injury.

You can briefly open the drain valves ⑦ to clean the line. Hot vapor can escape in the process.

- Only open the drain valves ⑦ briefly, and close them again before vapor escapes.

Procedure

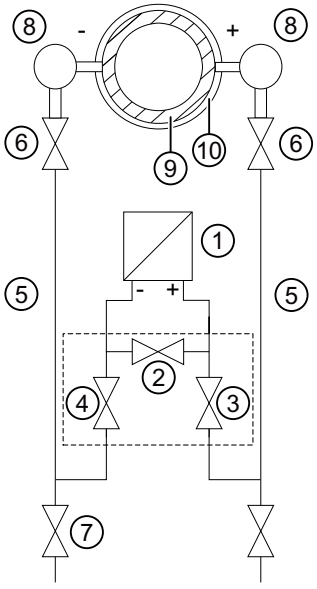

①	Pressure transmitter	⑦	Drain valves
②	Stabilizing valve	⑧	Condensate pots
③, ④	Differential pressure valves	⑨	Differential pressure transducer/Orifice plate
⑤	Differential pressure lines	⑩	Insulation
⑥	Shut-off valves	⑪	3-way valve manifold

To commission the pressure transmitter for vapor, proceed as follows:

1. Open both the shut-off valves ⑥ at the pressure tapping point.
2. Open the stabilizing valve ②.
3. Wait until the steam in the differential pressure lines ⑤ and in the equalizing vessels ⑧ has condensed.
4. Partially open the differential pressure valve ③ and the vent valve (sealing plug with vent valve) on the positive side of the pressure transmitter until condensate escapes without bubbles.
5. Close the vent valve (sealing plug with vent valve).

6. Partially open the vent valve (sealing plug with vent valve) on the negative side of the pressure transmitter until condensate escapes without bubbles.
7. Close the differential pressure valve ③.
8. Partially open the differential pressure valve ④ until condensate escapes without bubbles.
9. Close the vent valve with blanking plug on the negative side ①.
10. Close the differential pressure valve.
11. Open the differential pressure valve ③ by half a revolution.
12. For the start of scale value 0 bar, check the zero point (4 mA).
    If the differential pressure lines ⑤ have equally high condensate columns with the same temperature, the measurement result is error-free. Otherwise, repeat the zero-point adjustment.
13. Close the stabilizing valve ②.
14. Fully open the differential pressure valves ③ and ④.

Cleaning process cable

1. To clean the line, briefly open the drain valves ⑦.
2. Close the drain valve ⑦ before vapor escapes.

Service and maintenance 7

7.1 Basic safety instructions

The device is maintenance-free. However, a periodic inspection according to pertinent directives and regulations must be carried out.

An inspection can include check of:

- Ambient conditions
- Seal integrity of the process connections, cable entries, and cover screws
- Reliability of power supply, lightning protection, and grounds

WARNING

Use of a computer in a hazardous area

If the interface to the computer is used in the hazardous area, there is a risk of explosion.

- Ensure that the atmosphere is explosion-free (hot work permit).

WARNING

Dust layers above 5 mm

Risk of explosion in hazardous areas. Device may overheat due to dust build up.

- Remove dust layers in excess of 5 mm.

CAUTION

Releasing button lock

Improper modification of parameters could influence process safety.

- Make sure that only authorized personnel may cancel the button locking of devices for safety-related applications.

NOTICE

Penetration of moisture into the device

Device damage.

- Make sure when carrying out cleaning and maintenance work that no moisture penetrates the inside of the device.

7.2 Cleaning

Cleaning the enclosure

- Clean the outside of the enclosure with the inscriptions and the display window using a cloth moistened with water or a mild detergent.
- Do not use any aggressive cleansing agents or solvents, e.g. acetone. Plastic parts or the painted surface could be damaged. The inscriptions could become unreadable.

NOTICE
Improper cleaning of diaphragm Device damage. The diaphragm can be damaged. • Do not use sharp or hard objects to clean the diaphragm.

7.2.1 Servicing the remote seal measuring system

The remote seal measuring system usually does not need servicing.

If the mediums are contaminated, viscous or crystallized, it could be necessary to clean the diaphragm from time to time. Use only a suitable solvent to remove the deposits from the diaphragm. Do not use corrosive cleaning agents. Prevent the diaphragm from getting damaged due to sharp-edged tools.

7.3 Maintenance and repair work

⚠ WARNING
Impermissible repair and maintenance of the device • Repair and maintenance must be carried out by Siemens authorized personnel only.

⚠ WARNING
Impermissible repair of explosion protected devices Risk of explosion in hazardous areas • Repair must be carried out by Siemens authorized personnel only.

CAUTION

Hot surfaces

Risk of burns during maintenance work on parts having surface temperatures exceeding 70 °C (158 °F).

- Take corresponding protective measures, for example by wearing protective gloves.
- After carrying out maintenance, remount touch protection measures.

7.3.1 Defining the maintenance interval

WARNING

No maintenance interval has been defined

Device failure, device damage, and risk of injury.

- Define a maintenance interval for recurring tests depending on the use of the device and your own experience.
- The maintenance interval will vary from site to site depending on corrosion resistance.

WARNING

Maintenance during continued operation in a hazardous area

There is a risk of explosion when carrying out repairs and maintenance on the device in a hazardous area.

- Isolate the device from power.

- or -

- Ensure that the atmosphere is explosion-free (hot work permit).

WARNING

Impermissible accessories and spare parts

Risk of explosion in areas subject to explosion hazard.

- Only use original accessories or original spare parts.
- Observe all relevant installation and safety instructions described in the instructions for the device or enclosed with the accessory or spare part.

WARNING

Hot, toxic or corrosive process media

Risk of injury during maintenance work.

When working on the process connection, hot, toxic or corrosive process media could be released.

- As long as the device is under pressure, do not loosen process connections and do not remove any parts that are pressurized.
- Before opening or removing the device ensure that process media cannot be released.

WARNING

Improper connection after maintenance

Risk of explosion in areas subject to explosion hazard.

- Connect the device correctly after maintenance.
- Close the device after maintenance work.

Refer to Connecting the device (Page 39).

7.3.2 Checking the gaskets

Inspect the seals at regular intervals

Note

Incorrect seal changes

Incorrect measured values will be displayed. Changing the seals in a process flange of a differential pressure measuring cell can alter the start-of-scale value.

- Changing seals in devices with differential pressure measuring cells may only be carried out by personnel authorized by Siemens.

Note

Using the wrong seals

Using the wrong seals with flush-mounted process connections can cause measuring errors and/or damage the diaphragm.

- Always use seals which comply with the process connection standards or are recommended by Siemens.

1. Clean the enclosure and seals.
2. Check the enclosure and the seals for cracks and damage.
3. If necessary, lubricate the seals or replace them.

7.3.3 Diagnostics messages

Diagnostics (e.g. sensor break) detected by the internal self-test are signaled as follows:

- Display: NE107 symbol and diagnostics ID
- Current output (4-20 mA): Fault current
- HART: Diagnostic alarm via the remote operation

For a complete list of diagnostic messages and their meaning, refer to the "Diagnostics and Troubleshooting" section in the detailed operating instructions.

7.4 Return procedure

Enclose the bill of lading, return document and decontamination certificate in a clear plastic pouch and attach it firmly to the outside of the packaging. Any devices/replacement parts which are returned without a decontamination declaration will be cleaned at your expense before further processing. For further details, refer to the operating instructions.

See also

Decontamination declaration (http://www.siemens.com/sc/declarationofdecontamination)

Return document (http://www.siemens.com/processinstrumentation/returngoodsnote)

7.5 Disposal

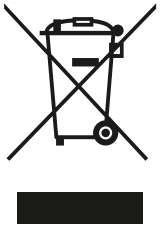

Devices described in this manual should be recycled. They may not be disposed of in the municipal waste disposal services according to the Directive 2012/19/EC on waste electronic and electrical equipment (WEEE).

Devices can be returned to the supplier within the EC, or to a locally approved disposal service for eco-friendly recycling. Observe the specific regulations valid in your country.

Further information about devices containing batteries can be found at: Information on battery/product return (WEEE) (https://support.industry.siemens.com/cs/document/109479891/)

Note

Special disposal required

The device includes components that require special disposal.

- Dispose of the device properly and environmentally through a local waste disposal contractor.

Technical data

8

8.1 Input

8.1.1 Gauge pressure

Gauge pressure input			
Measured variable	Gauge pressure		
Measuring span (continuously adjustable) or measuring range, max. operating pressure (in accordance with 2014/68/EU Pressure Equipment Directive) and max. test pressure (in accordance with DIN 16086) (for oxygen measurement, max. 100 bar and 60 °C ambient temperature/process temperature)	Measuring span	Maximum permissible operating pressure MAWP (PS)	Maximum test pressure
	8.3 … 250 mbar 0.83 ... 25 kPa 0.12 … 3.6 psi	4 bar 0.4 MPa 58 psi	6 bar 0.6 MPa 87 psi
	0.01 … 1 bar 1 ... 100 kPa 0.15 … 14.5 psi	6 bar 0.6 MPa 87 psi	9 bar 0.9 MPa 130 psi
	0.04 … 4 bar 4 ... 400 kPa 0.58 … 58 psi	20 bar 2 MPa 290 psi	30 bar 3 MPa 435 psi
	0.16 … 16 bar 0.016 ... 1.6 MPa 2.3 … 232 psi	45 bar 4.5 MPa 652 psi	70 bar 7 MPa 1015 psi
	0.63 … 63 bar 0.063 ... 6.3 MPa 9.1 … 914 psi	80 bar 8 MPa 1160 psi	120 bar 12 MPa 1740 psi
	1.6 … 160 bar 0.16 ... 16 MPa 23 … 2321 psi	240 bar 24 MPa 3480 psi	360 bar 36 MPa 5221 psi
	4 … 400 bar 0.4 ... 40 MPa 58 … 5802 psi	400 bar 40 MPa 5802 psi	600 bar 60 MPa 8702 psi
	7 … 700 bar 0.7 ... 70 MPa 102 ... 10153 psi	800 bar 80 MPa 11603 psi	800 bar 80 MPa 11603 psi

Gauge pressure measuring limits	
Lower measuring limit[1)]	
• Measuring cell with silicone oil filling	30 mbar a/3 kPa a/0.44 psi a

Gauge pressure measuring limits	
• Measuring cell with inert oil	30 mbar a/3 kPa a/0.44 psi a
• Measuring cell with FDA-compliant oil	100 mbar a/10 kPa a/1.45 psi a
Upper measuring limit	100% of max. range (for oxygen measurement: max. 100 bar/10 MPa/ 1450 psi and 60 °C ambient temperature/medium temperature)
Start of scale value	Between the measuring limits (continuously adjustable)

[1] For 250 mbar/25 kPa/3.6 psi measuring cells, the low measuring limit is 750 mbar a/75 kPa a/ 10.8 psi a. The measuring cell is vacuum-tight down to 30 mbar a/3 kPa a/0.44 psi a.

8.1.2 Gauge pressure with front-flush diaphragm

Gauge pressure input with front-flush diaphragm			
Measured variable	Gauge pressure		
Measuring span (continuously adjustable) or measuring range, max. operating pressure and max. test pressure	Measuring span	Maximum permissible operating pressure MAWP (PS)	Maximum test pressure
	0.01 … 1 bar 1 ... 100 kPa 0.15 … 14.5 psi	Refer to the information on the nameplate of the pressure transmitter and the data on the mounting flange[1]	
	0.04 … 4 bar 4 ... 400 kPa 0.58 … 58 psi		
	0.16 … 16 bar 0.016 ... 1.6 MPa 2.3 … 232 psi		
	0.6 … 63 bar 0.063 ... 6.3 MPa 9.1 … 914 psi		

[1] The MAWP value of the pressure transmitter can be lower than the PN value of the mounting flange and vice versa. To determine the maximum permissible operating pressure and the maximum permissible test pressure, use the lowest value as reference.

Gauge pressure measuring limits with front-flush diaphragm	
Lower measuring limit	
• Measuring cell with silicone oil filling	100 mbar a/10 kPa a/1.45 psi a
• Measuring cell with inert oil	100 mbar a/10 kPa a/1.45 psi a
• Measuring cell with FDA-compliant oil	100 mbar a/10 kPa a/1.45 psi a
Upper measuring limit	100% of max. range

8.1.3 Gauge pressure from the differential pressure series

Gauge pressure input from the differential pressure series			
Measured variable	Gauge pressure and differential pressure		
Measuring span (continuously adjustable) and maximum operating pressure (according to 2014/68/EU Pressure Equipment Directive)	Measuring span	Maximum permissible operating pressure MAWP (PS)	Max. permissible test pressure
	1 ... 20 mbar 0.1 ... 2 kPa 0.4015 … 8.031 inH_2O	160 bar 16 MPa 2320 psi	240 bar 24 MPa 3480 psi
	1 ... 60 mbar 0.1 ... 6 kPa 0.4015 … 24.09 inH_2O	160 bar 16 MPa 2320 psi	240 bar 24 MPa 3480 psi
	2.5 ... 250 mbar 0.2 ... 25 kPa 1.004 … 100.4 inH_2O	160 bar 16 MPa 2320 psi	240 bar 24 MPa 3480 psi
	6 ... 600 mbar 0.6 ... 60 kPa 2.409 … 240.9 inH_2O	160 bar 16 MPa 2320 psi	240 bar 24 MPa 3480 psi
	16 ... 1600 mbar 1.6 ... 160 kPa 6.424 … 642.4 inH_2O	160 bar 16 MPa 2320 psi	240 bar 24 MPa 3480 psi
	50 ... 5000 mbar 5 ... 500 kPa 20.08 … 2008 inH_2O	160 bar 16 MPa 2320 psi	240 bar 24 MPa 3480 psi
	0.3 … 30 bar 0.03 ... 3 MPa 4.35 … 435 psi	160 bar 16 MPa 2320 psi	240 bar 24 MPa 3480 psi
	5 … 100 bar 0.5 ... 10 MPa 76.9 … 1450 psi	160 bar 16 MPa 2320 psi	240 bar 24 MPa 3480 psi

Gauge pressure measuring limits from differential pressure series	
Lower measuring limit	
• Measuring cell with silicone oil filling	30 mbar a/3 kPa a/0.44 psi a
• Measuring cell with inert oil	30 mbar a/3 kPa a/0.44 psi a
• Measuring cell with FDA-compliant oil	100 mbar a/10 kPa a/1.45 psi a
Upper measuring limit	100% of max. range (for oxygen measurement: max. 100 bar/ 10 MPa/1450 psi and 60 °C ambient temperature/medium temperature)
Start of scale value	Between the measuring limits (continuously adjustable)

8.1.4 Absolute pressure from the gauge pressure series

Absolute pressure input from the gauge pressure series			
Measured variable	Absolute pressure		
Measuring span (continuously adjustable) or measuring range, max. operating pressure (in accordance with 2014/68/EU Pressure Equipment Directive) and max. test pressure (in accordance with DIN 16086)	Measuring span	Maximum permissible operating pressure MAWP (PS)	Maximum test pressure
	8.3 … 250 mbar a 0.83 ... 25 kPa a 3 … 100 inH_2O a	4 bar a 0.4 MPa a 58 psi a	6 bar a 0.6 MPa a 87 psi a
	43 … 1300 mbar a 4.3 ... 130 kPa a 17 … 525 inH_2O a	6.6 bar a 0.66 MPa a 95 psi a	10 bar a 1 MPa a 145 psi a
	166 … 5000 mbar a 16.6 ... 500 kPa a 2.41 … 72.5 psi a	20 bar a 2 MPa a 290 psi a	30 bar a 3 MPa a 435 psi a
	1 … 30 bar a 0.1 ... 3 MPa a 14.5 … 435 psi a	65 bar a 6.5 MPa a 942 psi a	100 bar a 10 MPa a 1450 psi a
	5.3 … 160 bar a 0.53 ... 16 MPa a 77 … 2321 psi a	240 bar a 24 MPa a 3480 psi a	380 bar a 38 MPa a 5511 psi a
	13.3 … 400 bar a 1.3 ... 40 MPa a 192 ... 5801 psi a	400 bar a 40 MPa a 5801 psi a	600 bar a 60 MPa a 8702 psi a
	23.3 … 700 bar a 2.3 ... 70 MPa a 337 ... 10152 psi a	800 bar a 80 MPa a 11603 psi a	800 bar a 80 MPa a 11603 psi a

Absolute pressure measuring limits from gauge pressure series		
Lower measuring limit		
• Measuring cell with silicone oil filling		0 mbar a/kPa a/psi a
• Measuring cell with inert oil		
	For process temperature -20 °C < ϑ ≤ 60 °C (-4 °F < ϑ ≤ +140 °F)	30 mbar a/3 kPa a/0.44 psi a
	For process temperature 60 °C < ϑ ≤ 100 °C (max. 85 °C for measuring cell 30 bar) (140 °F < ϑ ≤ 212 °F (max. 185 °F for measuring cell 435 psi))	30 mbar a + 20 mbar a • (ϑ - 60 °C)/°C 3 kPa a + 2 kPa a • (ϑ - 60 °C)/°C 0.44 psi a + 0.29 psi a • (ϑ - 140 °F)/°F

Absolute pressure measuring limits from gauge pressure series	
Upper measuring limit	100% of max. range (for oxygen measurement: max. 100 bar/10 MPa/ 1450 psi and 60 °C ambient temperature/medium temperature)
Lower range value	Between the measuring limits (continuously adjustable)

8.1.5 Absolute pressure with front-flush diaphragm

Absolute pressure with front-flush diaphragm			
Measured variable	Absolute pressure		
Measuring span (continuously adjustable) or measuring range, max. operating pressure and max. test pressure	Measuring span	Maximum permissible operating pressure MAWP (PS)	Maximum test pressure
	43 … 1300 mbar a 4.3 ... 130 kPa a 17 … 525 inH_2O a	Refer to the information on the nameplate of the pressure transmitter and the data on the mounting flange[1]	
	166 … 5000 mbar a 16.6 ... 500 kPa a 2.41 … 72.5 psi a		
	1 … 30 bar a 0.1 ... 3 MPa a 14.5 … 435 psi a		
	Depending on the process connection, the measuring span may differ from these values		

[1] The MAWP value of the pressure transmitter can be lower than the PN value of the mounting flange and vice versa. To determine the maximum permissible operating pressure and the maximum permissible test pressure, use the lowest value as reference.

Absolute pressure measuring limits with front-flush diaphragm	
Lower measuring limit	
• Measuring cell with silicone oil filling	0 mbar a/kPa a/psi a
Upper measuring limit	100% of max. range
Lower range value	Between the measuring limits (continuously adjustable)

8.1.6 Absolute pressure from the differential pressure series

Absolute pressure input from the differential pressure series			
Measured variable	Absolute pressure		
Measuring span (continuously adjustable) and maximum operating pressure (according to 2014/68/EU Pressure Equipment Directive)	Measuring span	Maximum permissible operating pressure MAWP (PS)	Max. permissible test pressure
	8.3 … 250 mbar a 0.83 ... 25 kPa a 3 … 100 inH_2O a	160 bar a 16 MPa a 2320 psi a	240 bar a 24 MPa a 3480 psi a
	43 … 1300 mbar a 4.3 ... 130 kPa a 17 … 525 inH_2O a	160 bar a 16 MPa a 2320 psi a	240 bar a 24 MPa a 3480 psi a
	166 … 5000 mbar a 16.6 ... 500 kPa a 2.41 … 72.5 psi a	160 bar a 16 MPa a 2320 psi a	240 bar a 24 MPa a 3480 psi a
	1 … 30 bar a 0.1 ... 3 MPa a 14.5 … 435 psi a	160 bar a 16 MPa a 2320 psi a	240 bar a 24 MPa a 3480 psi a
	5 … 100 bar a 0.5 ... 10 MPa a 76.9 … 1450 psi a	160 bar a 16 MPa a 2320 psi a	240 bar a 24 MPa a 3480 psi a

Absolute pressure measuring limits from differential pressure series	
Lower measuring limit	
• Measuring cell with silicone oil filling	0 mbar a/kPa a/psi a
• Measuring cell with inert liquid	
For process temperature -20 °C < ϑ ≤ 60 °C (-4 °F < ϑ ≤ +140 °F)	30 mbar a/3 kPa a/0.44 psi a
For process temperature 60 °C < ϑ ≤ 100 °C (max. 85 °C for measuring cell 30 bar) (140 °F < ϑ ≤ 212 °F (max. 185 °F for measuring cell 435 psi))	30 mbar a + 20 mbar a • (ϑ - 60 °C)/°C 3 kPa a + 2 kPa a • (ϑ - 60 °C)/°C 0.44 psi a + 0.29 psi a • (ϑ - 140 °F)/°F
Upper measuring limit	100% of max. range (for oxygen measurement: max. 100 bar/10 MPa/ 1450 psi and 60 °C ambient temperature/medium temperature)
Start of scale value	Between the measuring limits (continuously adjustable)

8.1.7 Differential pressure and flow

Differential pressure input and flow			
Measured variable	Differential pressure and flow		
Measuring span (continuously adjustable) and maximum operating pressure (according to 2014/68/EU Pressure Equipment Directive)	Measuring span	Maximum permissible operating pressure MAWP (PS)	Max. permissible test pressure
	1 ... 20 mbar 0.1 ... 2 kPa 0.4015 … 8.031 inH_2O	160 bar 16 MPa 2320 psi	240 bar 24 MPa 3480 psi
	1 ... 60 mbar 0.1 ... 6 kPa 0.4015 … 24.09 inH_2O	160 bar 16 MPa 2320 psi	240 bar 24 MPa 3480 psi
	2.5 ... 250 mbar 0.2 ... 25 kPa 1.004 … 100.4 inH_2O	160 bar 16 MPa 2320 psi	240 bar 24 MPa 3480 psi
	6 ... 600 mbar 0.6 ... 60 kPa 2.409 … 240.9 inH_2O	160 bar 16 MPa 2320 psi	240 bar 24 MPa 3480 psi
	16 ... 1600 mbar 1.6 ... 160 kPa 6.424 … 642.4 inH_2O	160 bar 16 MPa 2320 psi	240 bar 24 MPa 3480 psi
	50 ... 5000 mbar 5 ... 500 kPa 20.08 … 2008 inH_2O	160 bar 16 MPa 2320 psi	240 bar 24 MPa 3480 psi
	0.3 … 30 bar 0.03 ... 3 MPa 4.35 … 435 psi	160 bar 16 MPa 2320 psi	240 bar 24 MPa 3480 psi
	2.5 ... 250 mbar 0.25 ... 25 kPa 1.004 … 100.4 inH_2O	420 bar 42 MPa 6091 psi	630 bar 63 MPa 9137 psi
	6 ... 600 mbar 0.6 ... 60 kPa 2.409 … 240.9 inH_2O	420 bar 42 MPa 6091 psi	630 bar 63 MPa 9137 psi
	16 ... 1600 mbar 1.6 ... 160 kPa 6.424 … 642.4 inH_2O	420 bar 42 MPa 6091 psi	630 bar 63 MPa 9137 psi
	50 ... 5000 mbar 5 ... 500 kPa 20.08 … 2008 inH_2O	420 bar 42 MPa 6091 psi	630 bar 63 MPa 9137 psi
	0.3 … 30 bar 0.03 ... 3 MPa 4.35 … 435 psi	420 bar 42 MPa 6091 psi	630 bar 63 MPa 9137 psi

Differential pressure and flow measuring limits		
Lower measuring limit		
• Measuring cell with silicone oil filling	-100% of maximum measuring range or 30 mbar a /3 kPa a /0.44 psi a	
• Measuring cell with inert oil		
	For process temperature -20 °C < ϑ ≤ 60 °C (-4 °F < ϑ ≤ +140 °F)	-100% of maximum measuring range or 30 mbar a /3 kPa a /0.44 psi a
	For process temperature 60 °C < ϑ ≤ 100 °C (max. 85 °C for measuring cell 30 bar with PN420) (140 °F < ϑ ≤ 212 °F (max. 185 °F for measuring cell 435 psi))	-100% of maximum measuring range or 30 mbar a /3 kPa a /0.44 psi a 30 mbar a + 20 mbar a • (ϑ - 60 °C)/°C 3 kPa a + 2 kPa a • (ϑ - 60 °C)/°C 0.44 psi a + 0.29 psi a • (ϑ - 140 °F)/°F
• Measuring cell with FDA-compliant oil	For process temperature -10 °C < ϑ ≤ 100 °C (-14 °F < ϑ ≤ +212 °F)	-100% of maximum measuring range or 100 mbar a /10 kPa a / 14.5 psi a.
Upper measuring limit	100% of max. range (for oxygen measurement: max. 100 bar/10 MPa/1450 psi and 60 °C ambient temperature/medium temperature)	
Start of scale value	Between the measuring limits (continuously adjustable)	

8.1.8 Level

Level input			
Measured variable	Level		
Measuring span (continuously adjustable) and maximum operating pressure (according to 2014/68/EU Pressure Equipment Directive)	Measuring span	Maximum permissible operating pressure MAWP (PS)	Max. permissible test pressure
	25 ... 250 mbar 2.5 ... 25 kPa 10 … 100 inH_2O	See mounting flange	
	25 ... 600 mbar 2.5 ... 60 kPa 10 … 240 inH_2O		
	53 … 1600 mbar 5.3 ... 160 kPa 21 … 640 inH_2O		
	166 … 5000 mbar 16.6 ... 500 kPa 2.41 … 72.5 psi		

Level measuring limits		
Lower measuring limit		
	Measuring cell with silicone oil filling	-100% of max. measuring range or 30 mbar a/3 kPa a/0.44 psi a depending on the mounting flange
	Measuring cell with inert oil	-100% of max. measuring range or 30 mbar a/3 kPa a/0.44 psi a depending on the mounting flange
	Measuring cell with FDA-compliant oil	-100% of maximum measuring range or 100 mbar a /10 kPa a /1.45 psi a
Upper measuring limit		100% of max. range
Lower range value		Between the measuring limits (continuously adjustable)

8.2 Measuring accuracy of SITRANS P320

8.2.1 Reference conditions

- According to EN 60770-1/IEC 61298-1
- Rising characteristic curve
- Lower range value 0 bar/kPa/psi
- Seal diaphragm stainless steel
- Measuring cell with silicone oil filling
- Room temperature 25 °C (77 °F)

8.2.2 Effect of auxiliary power supply

0.005% per 1 V (in percent per change in voltage)

8.2.3 Gauge pressure

Conformity error at limit point setting, including hysteresis and repeatability - gauge pressure		
Measuring span ratio r (spread, Turn-Down)	r = max. measuring span/set measuring span and nominal measuring range	
• **Linear characteristic curve**	**r ≤ 1.25**	**1.25 < r ≤ 30**
250 mbar/25 kPa/3.6 psi	≤ 0.075%	≤ (0.008 • r + 0.055)%
• **Linear characteristic curve**	**r ≤ 5**	**5 < r ≤ 100**

Conformity error at limit point setting, including hysteresis and repeatability - gauge pressure			
	1 bar/100 kPa/14.5 psi 4 bar/400 kPa/58 psi 16 bar/1.6 MPa/232 psi 63 bar/6.3 MPa/914 psi 160 bar/16 MPa/12321 psi	≤ 0.065%	≤ (0.004 • r + 0.045)%
• **Linear characteristic curve**		**r ≤ 3**	**3 < r ≤ 100**
	400 bar/40 MPa/5802 psi 700 bar/70 MPa/10152 psi	≤ 0.075%	0.005 • r + 0.05

Effect of ambient temperature - gauge pressure	
In percent per 28 °C (50 °F)	
250 mbar/25 kPa/3.6 psi	≤ (0.16 • r + 0.1)%
1 bar/100 kPa/14.5 psi	≤ (0.05 • r + 0.1)%
4 bar/400 kPa/58 psi 16 bar/1.6 MPa/232 psi 63 bar/6.3 MPa/914 psi 160 bar/16 MPa/2321 psi 400 bar/40 MPa/5802 psi	≤ (0.025 • r + 0.125)%
700 bar/70 MPa/10152 psi	≤ (0.08 • r + 0.16)%

Long-term stability at ±30 °C (±54 °F) - gauge pressure	
250 mbar/25 kPa/3.6 psi	Per year ≤ (0.25 • r)%
1 bar/100 kPa/14.5 psi	In 5 years ≤ (0.25 • r)% In 10 years ≤ (0.35 • r)%
4 bar/400 kPa/58 psi 16 bar/1.6 MPa/232 psi 63 bar/6.3 MPa/914 psi 160 bar/16 MPa/2321 psi 400 bar/40 MPa/5802 psi	In 5 years ≤ (0.125 • r)% In 10 years ≤ (0.15 • r)%
700 bar/70 MPa/10152 psi	In 5 years ≤ (0.25 • r)% In 10 years ≤ (0.35 • r)%

Step response time T_{63} (without electrical damping) - gauge pressure
Approx. 0.105 s

Effect of mounting position - gauge pressure
≤ 0.05 mbar/0.005 kPa/0.000725 psi per 10° incline (correct the zero point with position error compensation)

8.2.4 Gauge pressure from the differential pressure series

Conformity error at limit point setting, including hysteresis and repeatability - gauge pressure from the differential pressure series			
Measuring span ratio r (spread, Turn-Down)		r = max. measuring span/set measuring span and nominal measuring range	
• **Linear characteristic curve**		**r ≤ 5**	**5 < r ≤ 20**
	20 mbar/2 kPa/8.031 inH_2O	≤ 0.075%	≤ (0.005 • r + 0.05)%
• **Linear characteristic curve**		**r ≤ 5**	**5 < r ≤ 60**
	60 mbar/6 kPa/24.09 inH_2O	≤ 0.075%	≤ (0.005 • r + 0.05)%
• **Linear characteristic curve**		**r ≤ 5**	**5 < r ≤ 100**
	250 mbar/25 kPa/3.6 psi 600 mbar/60 kPa/240.9 inH_2O 1600 mbar/160 kPa/642.4 inH_2O 5000 mbar/500 kPa/2008 inH_2O 30 bar/3 MPa/435 psi	≤ 0.065%	≤ (0.004 • r + 0.045)%
• **Linear characteristic curve**	100 bar/10 MPa/1450.3 psi	**r ≤ 10**	**10 < r ≤ 30**
		≤ 0.1%	≤ 0.2%

Effect of ambient temperature - gauge pressure from differential pressure series	
In percent per 28 °C (50 °F)	
20 mbar/2 kPa/8.031 inH_2O	≤ (0.15 • r + 0.1)%
60 mbar/6 kPa/24.09 inH_2O	≤ (0.075 • r + 0.1)%
250 mbar/25 kPa/3.6 psi 600 mbar/60 kPa/240.9 inH_2O 1600 mbar/160 kPa/642.4 inH_2O 5000 mbar/500 kPa/2008 inH_2O 30 bar/3 MPa/435 psi	≤ (0.025 • r + 0.125)%
100 bar/10 MPa/1450.3 psi	≤ (0.08 • r + 0.16)

Long-term stability at ±30 °C (±54 °F) - gauge pressure from differential pressure series	
20 mbar/2 kPa/8.031 inH_2O	Per year ≤ (0.2 • r)%
60 mbar/6 kPa/24.09 inH_2O	In 5 years ≤ (0.25 • r)%
250 mbar/25 kPa/3.6 psi 600 mbar/60 kPa/240.9 inH_2O 1600 mbar/160 kPa/642.4 inH_2O 5000 mbar/500 kPa/2008 inH_2O	In 5 years ≤ (0.125 • r)% In 10 years ≤ (0.15 • r)%
30 bar/3 MPa/435 psi	In 5 years ≤ (0.25 • r)% In 10 years ≤ (0.35 • r)%
100 bar/10 MPa/1450.3 psi	In 5 years ≤ (0.25 • r)%

Step response time T_{63} (without electrical damping) - gauge pressure from differential pressure series	
20 mbar/2 kPa/8.031 inH_2O	Approx. 0.160 s
60 mbar/6 kPa/24.09 inH2O	Approx. 0.150 s
250 mbar/25 kPa/3.6 psi 600 mbar/60 kPa/240.9 inH_2O 1600 mbar/160 kPa/642.4 inH_2O 5000 mbar/500 kPa/2008 inH_2O 30 bar/3 MPa/435 psi	Approx. 0.135 s
100 bar/10 MPa/1450.3 psi	Approx. 0.145 s

Effect of mounting position - gauge pressure from differential pressure series
≤ 0.7 mbar/0.007 kPa/0.01015266 psi per 10° incline (correct the zero point with position error compensation)

8.2.5 Absolute pressure from gauge and differential pressure series

Conformity error at limit point setting, including hysteresis and repeatability - absolute pressure from gauge and differential pressure series		
Measuring span ratio r (spread, Turn-Down)	r = max. measuring span/set measuring span and nominal measuring range	
• **Linear characteristic curve**	**r ≤ 10**	**10 < r ≤ 30**
All measuring cells	≤ 0.1%	≤ 0.2%

Effect of ambient temperature - absolute pressure from gauge and differential pressure series	
In percent per 28 °C (50 °F)	
250 mbar/25 kPa/3.6 psi	≤ (0.15 • r + 0.1)
1300 mbar a/130 kPa a/18.8 psi a 5 bar a/500 kPa a/72.5 psi a 30 bar a/3000 kPa a/435 psi a 100 bar a/10 MPa a/1450.3 psi a 160 bar a/16 MPa a/2321 psi a 400 bar a/40 MPa a/5802 psi a 700 bar a/70 MPa a/10152.6 psi a	≤ (0.08 • r + 0.16)

Long-term stability at ±30 °C (±54 °F) - absolute pressure from gauge and differential pressure series
In 5 years ≤ (0.25 • r)%

Step response time T_{63} (without electrical damping) - absolute pressure from gauge and differential pressure series	
Gauge pressure series	
All measuring cells	Approx. 0.105 s
Differential pressure series	
250 mbar/25 kPa/3.6 psi	Approx. 0.195 s
1300 mbar a/130 kPa a/18.8 psi a 5 bar a/500 kPa a/72.5 psi a 30 bar a/3000 kPa a/435 psi a 100 bar a/10 MPa a/1450.3 psi a	Approx. 0.145 s

Effect of mounting position - absolute pressure from gauge and differential pressure series
In pressure per change of angle • For absolute pressure (from the gauge pressure series): ≤ 0.05 mbar/0.005 kPa/ 0.000725 psi per 10° incline • For absolute pressure (from the differential pressure series): 0.7 mbar/0.07 kPa/ 0.001015 psi per 10° incline (zero-point correction is possible using the zero point adjustment)

8.2.6 Absolute pressure with front-flush diaphragm

Conformity error at limit point setting, including hysteresis and repeatability		
Measuring span ratio r (spread, Turn-Down)	r = max. measuring span/set measuring span and nominal measuring range	
Linear characteristic curve	r ≤ 10	10 < r ≤ 30
All measuring cells	≤ 0.2%	≤ 0.4%

Effect of ambient temperature	
In percent per 28 °C (50 °F)	
All measuring cells	≤ (0.16 • r + 0.24)

Long-term stability at ±30 °C (±54 °F)	
All measuring cells	In 5 years ≤ (0.25 • r)%

Step response time T_{63} (without electrical damping)
Approx. 0.105 s

Effect of mounting position
In pressure per change of angle 0.04 kPa/0.4 mbar/0.006 psi per 10° incline (zero-point correction is possible with position error compensation)

8.2.7 Gauge pressure with front-flush diaphragm

Conformity error at limit point setting, including hysteresis and repeatability - gauge pressure with front-flush diaphragm			
Measuring span ratio r (spread, Turn-Down)		r = max. measuring span/set measuring span and nominal measuring range	
• Linear characteristic curve		r ≤ 5	5 < r ≤ 100
	1 bar/100 kPa/14.5 psi 4 bar/400 kPa/58 psi 16 bar/1.6 MPa/232 psi 63 bar/6.3 MPa/914 psi	≤ 0.075%	≤ (0.005 • r + 0.05)%

Effect of ambient temperature - gauge pressure with front-flush diaphragm		
In percent per 28 °C (50 °F)		
	1 bar/100 kPa/14.5 psi 4 bar/400 kPa/58 psi 16 bar/1.6 MPa/232 psi 63 bar/6.3 MPa/914 psi	≤ (0.08 • r + 0.16)%

Long-term stability at ±30 °C (±54 °F) - gauge pressure with front-flush diaphragm	
1 bar/100 kPa/14.5 psi 4 bar/400 kPa/58 psi	In 5 years ≤ (0.25 • r)%
16 bar/1.6 MPa/232 psi 63 bar/6.3 MPa/914 psi	In 5 years ≤ (0.125 • r)%

Step response time T_{63} (without electrical damping) - gauge pressure with front-flush diaphragm
Approx. 0.105 s

Effect of mounting position - gauge pressure with front-flush diaphragm
≤ 0.4 mbar/0.04 kPa/0.006 psi per 10° incline (zero-point correction is possible with position error compensation)

8.2.8 Differential pressure and flow

Conformity error at limit point setting, including hysteresis and repeatability - differential pressure and flow			
Measuring span ratio r (spread, Turn-Down)		r = max. measuring span/set measuring span and nominal measuring range	
Linear characteristic curve		**r ≤ 5**	**5 < r ≤ 20**
	20 mbar/2 kPa/0.29 psi	≤ 0.075%	≤ (0.005 • r + 0.05)%
Linear characteristic curve		**r ≤ 5**	**5 < r ≤ 60**
	60 mbar/6 kPa/0.87 psi	≤ 0.075%	≤ (0.005 • r + 0.05)%
Linear characteristic curve		**r ≤ 5**	**5 < r ≤ 100**
	250 mbar/25 kPa/3.63 psi 600 mbar/60 kPa/8.70 psi 1600 mbar/160 kPa/23.21 psi 5 bar/500 kPa/72.52 psi 30 bar/3 MPa/435.11 psi	≤ 0.065%	≤ (0.004 • r + 0.045)%
Root extraction characteristic		**r ≤ 5**	**5 < r ≤ 20**
	Flow > 50%		
	20 mbar/2 kPa/0.29 psi	≤ 0.075%	≤ (0.005 • r + 0.05)%
Root extraction characteristic		**r ≤ 5**	**5 < r ≤ 60**
	Flow > 50%		
	60 mbar/6 kPa/0.87 psi	≤ 0.075%	≤ (0.005 • r + 0.05)%
Root extraction characteristic		**r ≤ 5**	**5 < r ≤ 100**
	Flow > 50%		
	250 mbar/25 kPa/3.63 psi 600 mbar/60 kPa/8.70 psi 1600 mbar/160 kPa/23.21 psi 5 bar/500 kPa/72.52 psi 30 bar/3 MPa/435.11 psi	≤ 0.065%	≤ (0.004 • r + 0.045)%
Root extraction characteristic		**r ≤ 5**	**5 < r ≤ 20**
	Flow 25 ... 50%		
	20 mbar/2 kPa/0.29 psi	≤ 0.15%	≤ (0.01 • r + 0.1)%
Root extraction characteristic		**r ≤ 5**	**5 < r ≤ 60**
	Flow 25 ... 50%		
	60 mbar/6 kPa/0.87 psi	≤ 0.15%	≤ (0.01 • r + 0.1)%
Root extraction characteristic		**r ≤ 5**	**5 < r ≤ 100**

Conformity error at limit point setting, including hysteresis and repeatability - differential pressure and flow			
	Flow 25 ... 50%		
	250 mbar/25 kPa/3.63 psi 600 mbar/60 kPa/8.70 psi 1600 mbar/160 kPa/23.21 psi 5 bar/500 kPa/72.52 psi 30 bar/3 MPa/435.11 psi	≤ 0.13%	≤ (0.008 • r + 0.09)%

Effect of ambient temperature - differential pressure and flow	
In percent per 28 °C (50 °F)	
20 mbar/2 kPa/0.29 psi	≤ (0.15 • r + 0.1)%
60 mbar/6 kPa/0.87 psi	≤ (0.075 • r + 0.1)%
250 mbar/25 kPa/3.63 psi 600 mbar/60 kPa/8.70 psi 1600 mbar/160 kPa/23.21 psi 5 bar/500 kPa/72.52 psi 30 bar/3 MPa/435.11 psi	≤ (0.025 • r + 0.125)%

Effect of static pressure - differential pressure and flow		
• On the lower range value		
	20 mbar/2 kPa/0.29 psi	≤ (0.15 • r)% per 70 bar (zero-point correction is possible with position error compensation)
	60 mbar/6 kPa/0.87 psi 250 mbar/25 kPa/3.63 psi 600 mbar/60 kPa/8.70 psi 1600 mbar/160 kPa/23.21 psi 30 bar/3 MPa/435.11 psi	≤ (0.1 • r)% per 70 bar (zero-point correction is possible with position error compensation)
	5 bar/500 kPa/72.52 psi	≤ (0.15 • r)% per 70 bar (zero-point correction is possible with position error compensation)
• On the measuring span		
	20 mbar/2 kPa/0.29 psi	≤ 0.2% per 70 bar
	60 mbar/6 kPa/0.87 psi 250 mbar/25 kPa/3.63 psi 600 mbar/60 kPa/8.70 psi 1600 mbar/160 kPa/23.21 psi 5 bar/500 kPa/72.52 psi 30 bar/3 MPa/435.11 psi	≤ 0.1% per 70 bar

Long-term stability at ±30 °C (±54 °F) - differential pressure and flow	
Static pressure max. 70 bar/7 MPa/1015 psi	
20 mbar/2 kPa/0.29 psi	Per year ≤ (0.2 • r)%
60 mbar/6 kPa/0.87 psi	In 5 years ≤ (0.25 • r)%

Long-term stability at ±30 °C (±54 °F) - differential pressure and flow	
250 mbar/25 kPa/3.63 psi 600 mbar/60 kPa/8.70 psi 1600 mbar/160 kPa/23.21 psi 5 bar/500 kPa/72.52 psi	In 5 years ≤ (0.125 • r)% In 10 years ≤ (0.15 • r)%
30 bar/3 MPa/435.11 psi	In 5 years ≤ (0.25 • r)% In 10 years ≤ (0.35 • r)%

Step response time T_{63} (without electrical damping) - - differential pressure and flow (PN160)	
20 mbar/2 kPa/0.29 psi	Approx. 0.160 s
60 mbar/6 kPa/0.87 psi	Approx. 0.150 s
250 mbar/25 kPa/3.63 ps 600 mbar/60 kPa/8.70 psi 1600 mbar/160 kPa/23.21 psi 5 bar/500 kPa/72.52 psi 30 bar/3 MPa/435.11 psi	Approx. 0.135 s

Step response time T_{63} (without electrical damping) - - differential pressure and flow (PN420)	
250 mbar/25 kPa/3.63 psi	Approx. 0.25 s
600 mbar/60 kPa/8.70 psi 1600 mbar/160 kPa/23.21 psi 5 bar/500 kPa/72.52 psi 30 bar/3 MPa/435.11 psi	Approx. 0.2 s

Effect of mounting position - differential pressure and flow	
Effect of mounting position	In pressure per change of angle ≤ 0.7 mbar/0.07 kPa/0.028 inH_2O per 10° incline (zero-point correction is possible with position error compensation)

8.2.9 Level

Conformity error at limit point setting, including hysteresis and repeatability - level			
Measuring span ratio r (spread, Turn-Down)	r = max. measuring span/set measuring span and nominal measuring range		
• Linear characteristic curve		r ≤ 5	5 < r ≤ 10
	250 mbar/25 kPa/3.63 psi 600 mbar/60 kPa/8.70 psi 1600 mbar/160 kPa/23.21 psi 5 bar/500 kPa/72.52 psi	≤ 0.065%	≤ (0.004 • r + 0.045)%

Effect of ambient temperature[1] - level	
In percent per 28 °C (50 °F)	
250 mbar/25 kPa/3.63 psi 600 mbar/60 kPa/8.70 psi 1600 mbar/160 kPa/23.21 psi 5 bar/500 kPa/72.52 psi	≤ (0.025 • r + 0.125)%

[1] Data only applies to the basic unit. The error of the remote seal must be considered additively.

Effect of static pressure - level	
• On the lower range value	
250 mbar/25 kPa/3.63 psi 600 mbar/60 kPa/8.70 psi 1600 mbar/160 kPa/23.21 psi	≤ (0.1 • r)% per 70 bar (zero-point correction is possible with position error compensation)
5 bar/500 kPa/72.52 psi	≤ (0.15 • r)% per 70 bar (zero-point correction is possible with position error compensation)
• On the measuring span	≤ (0.1 • r)% per 70 bar

Long-term stability at ±30 °C (±54 °F) - level	
All measuring cells	In 5 years ≤ (0.25 • r)% static pressure max. 70 bar/7 MPa/ 1015 psi

Effect of mounting position - level
Depends on the fill fluid in the mounting flange

8.3 Measuring accuracy of SITRANS P420

8.3.1 Reference conditions

- According to EN 60770-1/IEC 61298-1
- Rising characteristic curve
- Lower range value 0 bar/kPa/psi
- Seal diaphragm stainless steel
- Measuring cell with silicone oil filling
- Room temperature 25 °C (77 °F)

8.3.2 Effect of auxiliary power supply

0.005% per 1 V (in percent per change in voltage)

8.3.3 Gauge pressure

Conformity error at limit point setting, including hysteresis and repeatability - gauge pressure			
Measuring span ratio r (spread, Turn-Down)		r = max. measuring span/set measuring span and nominal measuring range	
• Linear characteristic curve		r ≤ 1.25	1.25 < r ≤ 30
	250 mbar/25 kPa/3.6 psi	≤ 0.065%	≤ (0.008 • r + 0.055)%
• Linear characteristic curve		r ≤ 5	5 < r ≤ 100
	1 bar/100 kPa/14.5 psi 4 bar/400 kPa/58 psi 16 bar/1.6 MPa/232 psi 63 bar/6.3 MPa/914 psi 160 bar/16 MPa/12321 psi	≤ 0.04%	≤ (0.004 • r + 0.045)%
• Linear characteristic curve		r ≤ 5	5 < r ≤ 100
	400 bar/40 MPa/5802 psi 700 bar/70 MPa/10152 psi	≤ 0.075%	≤ (0.005 • r + 0.05)%

Effect of ambient temperature - gauge pressure	
In percent per 28 °C (50 °F)	
250 mbar/25 kPa/3.6 psi	≤ (0.16 • r + 0.1)%
1 bar/100 kPa/14.5 psi	≤ (0.05 • r + 0.1)%

Effect of ambient temperature - gauge pressure	
4 bar/400 kPa/58 psi 16 bar/1.6 MPa/232 psi 63 bar/6.3 MPa/914 psi 160 bar/16 MPa/2321 psi 400 bar/40 MPa/5802 psi	≤ (0.025 • r + 0.125)%
700 bar/70 MPa/10152 psi	≤ (0.08 • r + 0.16)%

Long-term stability at ±30 °C (±54 °F) - gauge pressure	
250 mbar/25 kPa/3.6 psi	Per year ≤ (0.25 • r)%
1 bar/100 kPa/14.5 psi	In 5 years ≤ (0.25 • r)% In 10 years ≤ (0.35 • r)%
4 bar/400 kPa/58 psi 16 bar/1.6 MPa/232 psi 63 bar/6.3 MPa/914 psi 160 bar/16 MPa/2321 psi 400 bar/40 MPa/5802 psi	In 5 years ≤ (0.125 • r)% In 10 years ≤ (0.15 • r)%
700 bar/70 MPa/10152 psi	In 5 years ≤ (0.25 • r)% In 10 years ≤ (0.35 • r)%

Step response time T_{63} (without electrical damping) - gauge pressure
Approx. 0.105 s

Effect of mounting position - gauge pressure
≤ 0.05 mbar/0.005 kPa/0.000725 psi per 10° incline (zero-point correction is possible with position error compensation)

8.3.4 Gauge pressure from the differential pressure series

Conformity error at limit point setting, including hysteresis and repeatability - gauge pressure from differential pressure series		
Measuring span ratio r (spread, Turn-Down)	r = max. measuring span/set measuring span and nominal measuring range	
• **Linear characteristic curve**	**r ≤ 5**	**5 < r ≤ 20**
20 mbar/2 kPa/8.031 inH_2O	≤ 0.075%	≤ (0.005 • r + 0.05)%
• **Linear characteristic curve**	**r ≤ 5**	**5 < r ≤ 60**
60 mbar/6 kPa/24.09 inH_2O	≤ 0.075%	≤ (0.005 • r + 0.05)%
• **Linear characteristic curve**	**r ≤ 5**	**5 < r ≤ 100**

Conformity error at limit point setting, including hysteresis and repeatability - gauge pressure from differential pressure series			
	250 mbar/25 kPa/3.6 psi 600 mbar/60 kPa/240.9 inH_2O 1600 mbar/160 kPa/642.4 inH_2O 5000 mbar/500 kPa/2008 inH_2O 30 bar/3 MPa/435 psi	≤ 0.04%	≤ (0.004 • r + 0.045)%
• **Linear characteristic curve**	100 bar/10 MPa/1450.3 psi	**r ≤ 10**	**10 < r ≤ 30**
		≤ 0.1%	≤ 0.2%

Effect of ambient temperature - gauge pressure from differential pressure series	
In percent per 28 °C (50 °F)	
20 mbar/2 kPa/8.031 inH_2O	≤ (0.15 • r + 0.1)%
60 mbar/6 kPa/24.09 inH_2O	≤ (0.075 • r + 0.1)%
250 mbar/25 kPa/3.6 psi 5000 mbar/500 kPa/2008 inH_2O	≤ (0.025 • r + 0.0625)%
600 mbar/60 kPa/240.9 inH_2O 1600 mbar/160 kPa/642.4 inH_2O 30 bar/3 MPa/435 psi	≤ (0.0125 • r + 0.0625)%
100 bar/10 MPa/1450.3 psi	≤ (0.08 • r + 0.16)%

Long-term stability at ±30 °C (±54 °F) - gauge pressure from differential pressure series	
20 mbar/2 kPa/8.031 inH_2O	Per year ≤ (0.2 • r)%
60 mbar/6 kPa/24.09 inH_2O	In 5 years ≤ (0.25 • r)%
250 mbar/25 kPa/3.6 psi 600 mbar/60 kPa/240.9 inH_2O 1600 mbar/160 kPa/642.4 inH_2O 5000 mbar/500 kPa/2008 inH_2O	In 5 years ≤ (0.125 • r)% In 10 years ≤ (0.15 • r)%
30 bar/3 MPa/435 psi	In 5 years ≤ (0.25 • r)% In 10 years ≤ (0.35 • r)%
100 bar/10 MPa/1450.3 psi	In 5 years ≤ (0.25 • r)%

Step response time T_{63} (without electrical damping) - gauge pressure from differential pressure series	
20 mbar/2 kPa/8.031 inH_2O	Approx. 0.160 s
60 mbar/6 kPa/24.09 inH2O	Approx. 0.150 s
250 mbar/25 kPa/3.6 psi 600 mbar/60 kPa/240.9 inH_2O 1600 mbar/160 kPa/642.4 inH_2O 5000 mbar/500 kPa/2008 inH_2O 30 bar/3 MPa/435 psi	Approx. 0.135 s
100 bar/10 MPa/1450.3 psi	Approx. 0.145 s

Effect of mounting position
≤ 0.7 mbar/0.007 kPa/0.01015266 psi per 10° incline (zero-point correction is possible with position error compen- sation)

8.3.5 Absolute pressure from gauge and differential pressure series

Conformity error at limit point setting, including hysteresis and repeatability - absolute pressure from gauge and differential pressure series		
Measuring span ratio r (spread, Turn-Down)	r = max. measuring span/set measuring span and nominal measuring range	
• **Linear characteristic curve**	**r ≤ 10**	**10 < r ≤ 30**
All measuring cells	≤ 0.1%	≤ 0.2%

Effect of ambient temperature - absolute pressure from gauge and differential pressure series	
In percent per 28 °C (50 °F)	
250 mbar/25 kPa/3.6 psi	≤ (0.15 • r + 0.1)
1300 mbar a/130 kPa a/18.8 psi a 5 bar a/500 kPa a/72.5 psi a 30 bar a/3000 kPa a/435 psi a 100 bar a/10 MPa a/1450.3 psi a 160 bar a/16 MPa a/2321 psi a 400 bar a/40 MPa a/5802 psi a 700 bar a/70 MPa a/10152.6 psi a	≤ (0.08 • r + 0.16)

Long-term stability at ±30 °C (±54 °F) - absolute pressure from gauge and differential pressure series
In 5 years ≤ (0.25 • r)%

Step response time T_{63} (without electrical damping) - absolute pressure from gauge and differential pressure series	
Gauge pressure series	
All measuring cells	Approx. 0.105 s
Differential pressure series	
250 mbar/25 kPa/3.6 psi	Approx. 0.195 s
1300 mbar a/130 kPa a/18.8 psi a 5 bar a/500 kPa a/72.5 psi a 30 bar a/3000 kPa a/435 psi a 100 bar a/10 MPa a/1450.3 psi a	Approx. 0.145 s

Effect of mounting position - absolute pressure from gauge and differential pressure series
In pressure per change of angle • For absolute pressure (from the gauge pressure series): ≤ 0.05 mbar/0.005 kPa/0.000725 psi per 10° incline • For absolute pressure (from the differential pressure series): 0.7 mbar/0.07 kPa/0.001015 psi per 10° incline (zero-point correction is possible with position error compensation)

8.3.6 Absolute pressure with front-flush diaphragm

Conformity error at limit point setting, including hysteresis and repeatability		
Measuring span ratio r (spread, Turn-Down)	r = max. measuring span/set measuring span and nominal measuring range	
Linear characteristic curve	r ≤ 10	10 < r ≤ 30
All measuring cells	≤ 0.2%	≤ 0.4%

Effect of ambient temperature	
In percent per 28 °C (50 °F)	
All measuring cells	≤ (0.16 • r + 0.24)

Long-term stability at ±30 °C (±54 °F)	
All measuring cells	In 5 years ≤ (0.25 • r)%

Step response time T_{63} (without electrical damping)
Approx. 0.105 s

Effect of mounting position
In pressure per change of angle 0.04 kPa/0.4 mbar/0.006 psi per 10° incline (zero-point correction is possible with position error compensation)

8.3.7 Gauge pressure with front-flush diaphragm

Conformity error at limit point setting, including hysteresis and repeatability - gauge pressure with front-flush diaphragm			
Measuring span ratio r (spread, Turn-Down)		r = max. measuring span/set measuring span and nominal measuring range	
• Linear characteristic curve		r ≤ 5	5 < r ≤ 100
	1 bar/100 kPa/14.5 psi 4 bar/400 kPa/58 psi 16 bar/1.6 MPa/232 psi 63 bar/6.3 MPa/914 psi	≤ 0.075%	≤ (0.005 • r + 0.05)%

Effect of ambient temperature - gauge pressure with front-flush diaphragm		
In percent per 28 °C (50 °F)		
	1 bar/100 kPa/14.5 psi 4 bar/400 kPa/58 psi 16 bar/1.6 MPa/232 psi 63 bar/6.3 MPa/914 psi	≤ (0.08 • r + 0.16)%

Long-term stability at ±30 °C (±54 °F) - gauge pressure with front-flush diaphragm	
1 bar/100 kPa/14.5 psi 4 bar/400 kPa/58 psi	In 5 years ≤ (0.25 • r)%
16 bar/1.6 MPa/232 psi 63 bar/6.3 MPa/914 psi	In 5 years ≤ (0.125 • r)%

Step response time T_{63} (without electrical damping) - gauge pressure with front-flush diaphragm
Approx. 0.105 s

Effect of mounting position - gauge pressure with front-flush diaphragm
≤ 0.4 mbar/0.04 kPa/0.006 psi per 10° incline (zero-point correction is possible with position error compensation)

8.3.8 Differential pressure and flow

Conformity error at limit point setting, including hysteresis and repeatability - differential pressure and flow			
Measuring span ratio r (spread, Turn-Down)		r = max. measuring span/set measuring span and nominal measuring range	
Linear characteristic curve		r ≤ 5	5 < r ≤ 20
	20 mbar/2 kPa/0.29 psi	≤ 0.075%	≤ (0.005 • r + 0.05)%

Conformity error at limit point setting, including hysteresis and repeatability - differential pressure and flow			
Linear characteristic curve		**r ≤ 5**	**5 < r ≤ 60**
	60 mbar/6 kPa/0.87 psi	≤ 0.075%	≤ (0.005 • r + 0.05)%
Linear characteristic curve		**r ≤ 5**	**5 < r ≤ 100**
	250 mbar/25 kPa/3.63 psi (PN160) 600 mbar/60 kPa/8.70 psi 1600 mbar/160 kPa/23.21 psi 5 bar/500 kPa/72.52 psi 30 bar/3 MPa/435.11 psi	≤ 0.04%	≤ (0.004 • r + 0.045)%
	250 mbar/25 kPa/3.63 psi (PN420) 600 mbar/60 kPa/8.70 psi 1600 mbar/160 kPa/23.21 psi 5 bar/500 kPa/72.52 psi 30 bar/3 MPa/435.11 psi	≤ 0.065%	
Root extraction characteristic		**r ≤ 5**	**5 < r ≤ 20**
	Flow > 50%		
	• 20 mbar/2 kPa/0.29 psi	≤ 0.075%	≤ (0.005 • r + 0.05)%
Root extraction characteristic		**r ≤ 5**	**5 < r ≤ 60**
	Flow > 50%		
	• 60 mbar/6 kPa/0.87 psi	≤ 0.075%	≤ (0.005 • r + 0.05)%
Root extraction characteristic		**r ≤ 5**	**5 < r ≤ 100**
	Flow > 50%		
	• 250 mbar/25 kPa/3.63 psi 600 mbar/60 kPa/8.70 psi 1600 mbar/160 kPa/23.21 psi 5 bar/500 kPa/72.52 psi 30 bar/3 MPa/435.11 psi	≤ 0.04%	≤ (0.004 • r + 0.045)%
Root extraction characteristic		**r ≤ 5**	**5 < r ≤ 20**
	Flow 25 ... 50%		
	• 20 mbar/2 kPa/0.29 psi	≤ 0.15%	≤ (0.01 • r + 0.1)%
Root extraction characteristic		**r ≤ 5**	**5 < r ≤ 60**
	Flow 25 ... 50%		
	• 60 mbar/6 kPa/0.87 psi	≤ 0.15%	≤ (0.01 • r + 0.1)%
Root extraction characteristic		**r ≤ 5**	**5 < r ≤ 100**

Conformity error at limit point setting, including hysteresis and repeatability - differential pressure and flow			
	Flow 25 ... 50%		
	• 250 mbar/25 kPa/3.63 psi 600 mbar/60 kPa/8.70 psi 1600 mbar/160 kPa/23.21 psi 5 bar/500 kPa/72.52 psi 30 bar/3 MPa/435.11 psi	≤ 0.08%	≤ (0.008 • r + 0.09)%

Effect of ambient temperature - differential pressure and flow	
In percent per 28 °C (50 °F)	
20 mbar/2 kPa/0.29 psi	≤ (0.15 • r + 0.1)%
60 mbar/6 kPa/0.87 psi	≤ (0.075 • r + 0.1)%
250 mbar/25 kPa/3.63 psi	≤ (0.025 • r + 0.0625)%
600 mbar/60 kPa/8.70 psi 1600 mbar/160 kPa/23.21 psi	≤ (0.0125 • r+0.0625)%
5 bar/500 kPa/72.52 psi	≤ (0.025 • r + 0.0625)%
30 bar/3 MPa/435.11 psi	≤ (0.0125 • r+0.0625)%

Effect of static pressure - differential pressure and flow		
• On the lower range value		
	20 mbar/2 kPa/0.29 psi	≤ (0.15 • r)% per 70 bar (zero-point correction is possible with position error compensation)
	60 mbar/6 kPa/0.87 psi 250 mbar/25 kPa/3.63 psi 600 mbar/60 kPa/8.70 psi 1600 mbar/160 kPa/23.21 psi 30 bar/3 MPa/435.11 psi	≤ (0.1 • r)% per 70 bar (zero-point correction is possible with position error compensation)
	5 bar/500 kPa/72.52 psi	≤ (0.15 • r)% per 70 bar (zero-point correction is possible with position error compensation)
• On the measuring span		
	20 mbar/2 kPa/0.29 psi	≤ 0.2% per 70 bar
	60 mbar/6 kPa/0.87 psi 250 mbar/25 kPa/3.63 psi 600 mbar/60 kPa/8.70 psi 1600 mbar/160 kPa/23.21 psi 5 bar/500 kPa/72.52 psi 30 bar/3 MPa/435.11 psi	≤ 0.1% per 70 bar

Long-term stability at ±30 °C (±54 °F) - differential pressure and flow	
Static pressure max. 70 bar/7 MPa/1015 psi	
20 mbar/2 kPa/0.29 psi	Per year ≤ (0.2 • r)%
60 mbar/6 kPa/0.87 psi	In 5 years ≤ (0.25 • r)%

Long-term stability at ±30 °C (±54 °F) - differential pressure and flow	
250 mbar/25 kPa/3.63 psi 600 mbar/60 kPa/8.70 psi 1600 mbar/160 kPa/23.21 psi 5 bar/500 kPa/72.52 psi	In 5 years ≤ (0.125 • r)% In 10 years ≤ (0.15 • r)%
30 bar/3 MPa/435.11 psi	In 5 years ≤ (0.25 • r)% In 10 years ≤ (0.35 • r)%

Step response time T_{63} (without electrical damping) - - differential pressure and flow (PN160)	
20 mbar/2 kPa/0.29 psi	Approx. 0.160 s
60 mbar/6 kPa/0.87 psi	Approx. 0.150 s
250 mbar/25 kPa/3.63 ps 600 mbar/60 kPa/8.70 psi 1600 mbar/160 kPa/23.21 psi 5 bar/500 kPa/72.52 psi 30 bar/3 MPa/435.11 psi	Approx. 0.135 s

Step response time T_{63} (without electrical damping) - - differential pressure and flow (PN420)	
250 mbar/25 kPa/3.63 psi	Approx. 0.25 s
600 mbar/60 kPa/8.70 psi 1600 mbar/160 kPa/23.21 psi 5 bar/500 kPa/72.52 psi 30 bar/3 MPa/435.11 psi	Approx. 0.2 s

Effect of mounting position - differential pressure and flow	
Effect of mounting position	In pressure per change of angle ≤ 0.7 mbar/0.07 kPa/0.028 inH_2O per 10° incline (zero-point correction is possible with position error compensation)

8.3.9 Level

Conformity error at limit point setting, including hysteresis and repeatability - level			
Measuring span ratio r (spread, Turn-Down)	r = max. measuring span/set measuring span and nominal measuring range		
• Linear characteristic curve		r ≤ 5	5 < r ≤ 10
	250 mbar/25 kPa/3.63 psi 600 mbar/60 kPa/8.70 psi 1600 mbar/160 kPa/23.21 psi 5 bar/500 kPa/72.52 psi	≤ 0.04%	≤ (0.004 • r + 0.045)%

Effect of ambient temperature[1] - level	
In percent per 28 °C (50 °F)	
250 mbar/25 kPa/3.63 psi 5 bar/500 kPa/72.52 psi	≤ (0.025 • r + 0.0625)%
600 mbar/60 kPa/8.70 psi 1600 mbar/160 kPa/23.21 psi	≤ (0.125 • r + 0.0625)%

[1] Data only applies to the basic unit. The error of the remote seal must be considered additively.

Effect of static pressure - level	
• On the lower range value	
50 mbar/25 kPa/3.63 psi 600 mbar/60 kPa/8.70 psi 600 mbar/160 kPa/23.21 psi	≤ (0.1 • r)% per 70 bar (zero-point correction is possible with position error compensation)
5 bar/500 kPa/72.52 psi	≤ (0.15 • r)% per 70 bar (zero-point correction is possible with position error compensation)
• On the measuring span	≤ (0.1 • r)% per 70 bar

Long-term stability at ±30 °C (±54 °F) - level	
All measuring cells	In 5 years ≤ (0.25 • r)% static pressure max. 70 bar/7 MPa/1015 psi

Effect of mounting position - level
Depends on the fill fluid in the mounting flange

8.4 Operating conditions

Operating conditions for gauge pressure and absolute pressure (from the gauge pressure series)		
Ambient conditions		
• Ambient temperature		
Note	Observe the temperature class in hazardous areas.	
Enclosure		
Measuring cell with silicone oil filling	-40 … +85 °C (-40 … +185 °F)	
Measuring cell with inert oil for gauge pressure measuring cells 1, 4, 16 and 63 bar	-40 ... +85 °C (-40 ...+185 °F)	
Measuring cell with inert oil	-20 … +85 °C (-4 … +185 °F)	
Measuring cell with FDA-compliant oil	-10 ...+85 °C (14 ... +185 °F)	
Display	-20 … +80 °C (-4 … +185 °F)	
• Storage temperature	-50 … +85 °C (-58 … +185 °F) (for FDA-compliant oil: -20 ... + 85 °C (-4 ... +185 °F))	
Climate class in accordance with IEC 60721-3-4	4K4H	
Degree of protection according to IEC/EN 60529/UL50-E	Enclosure with appropriate cable gland	IP66/Type 4X IP68 (2 hours at 1.5 m)
	Enclosure with mounted M12 connector and/or lightning protection	IP66/Type 4X
	Enclosure with mounted HAN connector	IP65
Electromagnetic compatibility		
Interference emission and interference immunity	In accordance with EN 61326 and NAMUR NE 21	
Process medium conditions		
• Process temperature		

Operating conditions for gauge pressure and absolute pressure (from the gauge pressure series)		
Cell	*Pressure*	*Temperature range*
Measuring cell with silicone oil filling		-40 … +100 °C (-40 … +212 °F)
Measuring cell with inert oil	1 bar/100 kPa/3.6 psi	-40 … +100 °C (-40 … +212 °F)
	4 bar/400 kPa/58 psi	-40 … +100 °C (-40 … +212 °F)
	16 bar/1.6 MPa/232 psi	-40 … +100 °C (-40 … +212 °F)
	63 bar/6.3 MPa/914 psi	-40 … +100 °C (-40 … +212 °F)
	160 bar/16 MPa/2321 psi	-20 … +100 °C (-4 … +212 °F)
	400 bar/40 MPa/5802 psi	-20 … +100 °C (-4 … +212 °F)
	700 bar/70 MPa/10152 psi	-20 … +100 °C (-4 … +212 °F)
Measuring cell with FDA-compliant oil		-10 ... +100 °C (14 ... +212 °F)

Operating conditions for gauge pressure and absolute pressure with flush-mounted diaphragm		
Ambient conditions		
• Ambient temperature		
Note	Observe the temperature class in hazardous areas.	
Enclosure		
Measuring cell with silicone oil filling	-40 … +85 °C (-40 … +185 °F)	
Measuring cell with inert oil (different pressure classes)	1 bar/100 kPa/3.6 psi	-40 … +100 °C (-40 … +212 °F)
	4 bar/400 kPa/58 psi	-40 … +100 °C (-40 … +212 °F)
	16 bar/1.6 MPa/232 psi	-40 … +100 °C (-40 … +212 °F)
	63 bar/6.3 MPa/914 psi	-40 … +100 °C (-40 … +212 °F)
	160 bar/16 MPa/2321 psi	-20 … +100 °C (-4 … +212 °F)
	400 bar/40 MPa/5802 psi	-20 … +100 °C (-4 … +212 °F)
	700 bar/70 MPa/10152 psi	-20 … +100 °C (-4 … +212 °F)
Measuring cell with FDA-compliant oil	-10 … +85 °C (14 … 185 °F)	
Display	-20 … +80 °C (-4 … +176 °F)	
• Storage temperature	-50 … +85 °C (-58 … +185 °F) (with FDA-compliant oil: -20 ... + 85 °C (-4 ... +185 °F))	
Climate class in accordance with IEC 60721-3-4	4K4H	
Degree of protection according to IEC/EN 60529/UL50-E	Enclosure with appropriate cable gland	IP66/Type 4X IP68 (2 hours at 1.5 m)
	Enclosure with mounted M12 connector and/or lightning protection	IP66/Type 4X
	Enclosure with mounted HAN connector	IP65

Operating conditions for gauge pressure and absolute pressure with flush-mounted diaphragm	
Electromagnetic compatibility	
• Interference emission and interference immunity	In accordance with EN 61326 and NAMUR NE 21
Process medium conditions	
Process temperature[1)]	
• Measuring cell with silicone oil filling	-40 … +150°C (-40 … +302 °F) -40 … +200°C (-40 … +392 °F) with cooling extension
• Measuring cell with inert oil	-20 … +100 °C (-4 … +212 °F)
• Measuring cell with FDA-compliant oil	-10 … +150°C (14 … 302 °F) -10 … +200°C (14 … 392 °F) with cooling extension

1) Observe the temperature limits in the process connection standards (e.g. DIN 32676 and DIN 11851) for the maximum process temperature for flush-mounted process connections.

Operating conditions for gauge pressure and absolute pressure (from the differential pressure series), differential pressure and flow rate		
Installation conditions		
• Installation instruction	Any	
Ambient conditions		
• Ambient temperature		
Note	Observe the temperature class in hazardous areas.	
Enclosure		
Measuring cell with silicone oil filling	-40 … +85 °C (-40 … +185 °F)	
• Measuring cell 30 bar (435 psi), PN420	• -20 … +85 °C (-4 … +185 °F) • For flow: -20 … +85 °C (-4 … +185 °F)	
Measuring cell with inert oil	-20 … +85 °C (-4 … +185 °F)	
Measuring cell with FDA-compliant oil	-10 … +85 °C (14 … 185 °F)	
Display	-20 … +80 °C (-4 … +185 °F)	
• Storage temperature	-50 … +85 °C (-58 … +185 °F) (with FDA-compliant oil: -20 ... + 85 °C (-4 ... +185 °F))	
Climate class in accordance with IEC 60721-3-4	4K4H	
Degree of protection according to IEC/EN 60529/UL50-E	Enclosure with appropriate cable gland	IP66/Type 4X IP68 (2 hours at 1.5 m)
	Enclosure with mounted M12 connector and/or lightning protection	IP66/Type 4X

Operating conditions for gauge pressure and absolute pressure (from the differential pressure series), differential pressure and flow rate		
	Enclosure with mounted HAN connector	IP65
Electromagnetic compatibility		
Interference emission and interference immunity	In accordance with EN 61326 and NAMUR NE 21	
Process medium conditions		
• Process temperature		
Measuring cell with silicone oil filling	-40 … +100 °C (-40 … +212 °F)	
• Measuring cell 30 bar (435 psi), PN420	-20 … +85 °C (-4 … +185 °F)	
Measuring cell with inert oil	-20 … +100 °C (-4 … +212 °F)	
• Measuring cell 30 bar (435 psi), PN420	-20 … +85 °C (-4 … +185 °F)	
Measuring cell with FDA-compliant oil	-10 ... +100°C (14 ...+212°F)	
In conjunction with dust explosion protection	-40 … +85 °C (-4 … +185 °F)	

Operating conditions for level		
Installation conditions		
• Installation instruction	Specified by the flange	
Ambient conditions		
• Ambient temperature		
Note	Observe the allocation of the max. permissible operating temperature to the max. permissible operating pressure of the relevant flange connection.	
Enclosure		
Measuring cell with silicone oil filling	-40 … +85 °C (-40 … +185 °F)	
Display	-20 … +80 °C (-4 … +185 °F)	
• Storage temperature	-50 … +85 °C (-58 … +185 °F)	
Climate class in accordance with IEC 60721-3-4	4K4H	
Degree of protection according to IEC/EN 60529/UL50-E	Enclosure with appropriate cable gland	IP66/Type 4X IP68 (2 hours at 1.5 m)
	Enclosure with mounted M12 connector and/or lightning protection	IP66/Type 4X

Operating conditions for level		
	Enclosure with mounted HAN connector	IP65
Electromagnetic compatibility		
Interference emission and interference immunity	In accordance with EN 61326 and NAMUR NE 21	
Process medium conditions		
• Process temperature		
Measuring cell with silicone oil filling	• Plus side: See mounting flange • Minus side: -40 … +100 °C (-40 … +212 °F)	

8.5 Vibration resistance

General operating conditions	Gauge pressure series[2)] Aluminum and stainless steel enclosure	Differential pressure series[1)] Aluminum and stainless steel enclosure
Vibrations (sine) IEC 60068-2-6	2 ... 9 Hz at 0.3 mm 9 ... 200 Hz at 5 m/s² 1 octave/min 5 cycles/axis	
Continuous shocks (half-sine) IEC 60068-2-27	70 m/s² 30 ms 6 shocks/axis	
Continuous shocks (half-sine) IEC 60068-2-27	250 m/s² 6 ms 1000 shocks/axis	

1) Without mounting bracket
2) With mounting bracket

Operating conditions according to KTA 3503	Gauge pressure series[2)] Aluminum and stainless steel enclosure	Differential pressure series[2)] Aluminum and stainless steel enclosure
Vibrations (sine) IEC 60068-2-6	9 ... 35 Hz at 10 m/s² 1 octave/min 1 cycle/axis	
Vibrations (sine) IEC 60068-2-6	5 ... 7 Hz at 20 mm 9 ... 100 Hz at 20 m/s² 10 octave/min 1 cycle/axis	
Continuous shocks (half-sine) IEC 60068-2-27	300 m/s² 11 ms 6 shocks/axis	

2) With mounting bracket

Operating conditions according to IEC 61298-3 (2g normal)	Gauge pressure series[2)] Aluminum and stainless steel enclosure	Differential pressure series[1)2)] Aluminum and stainless steel enclosure
Vibrations (sine) IEC 60068-2-6	10 ... 58 Hz at 0.3 mm 58 ... 1000 Hz at 20 m/s² 1 octave/min 20 cycles/axis	

1) Without mounting bracket
2) With mounting bracket

Operating conditions according to IEC 61298-3 (5g enhanced)	Differential pressure series[1)] Aluminum and stainless steel enclosure
Vibrations (sine) IEC 60068-2-6	10 ... 58 Hz at 0.7 mm 58 ... 1000 Hz at 50 m/s² 1 octave/min 20 cycles/axis

1) Without mounting bracket

Operating conditions for marine (only in combination with order option E):	Gauge pressure series[1)2)]	Differential pressure series[3)]
DNV-GL (Det Norske Veritas/Germanischer Lloyd) Lloyd's Register Bureau Veritas ABS (American Bureau of Shipping) RINA (Registro Italiano Navale) CCS (China Classification Society)	2 ... 25 Hz at 3.2 mm 25 ... 100 Hz at 40 m/s² 0.5 octave/min 1 frequency sweep/axis Amplification factor (Q) < 2, 30 Hz/90 min Amplification factor (Q) > 2, resonant frequency/90 min	

1) Without bracket and aluminum enclosure
2) With mounting bracket, aluminum and stainless steel enclosure
3) Without mounting bracket, aluminum and stainless steel enclosure

8.6 Construction

Construction for gauge pressure and absolute pressure (from the gauge pressure series)	
Weight	Approx. 1.8 kg (3.9 lb) with aluminum enclosure Approx. 3.8 kg (8.3 lb) with stainless steel enclosure
Material	
• Wetted parts materials	
Process connection	Stainless steel, material no. 1.4404/316L or Alloy C22, material no. 2.4602
Oval flange	Stainless steel, mat. no. 1.4404/316L
Seal diaphragm	Stainless steel, material no. 1.4404/316L or Alloy C276, material no. 2.4819
• Non-wetted parts materials	
Electronics housing	• Low-copper die-cast aluminum GD-AlSi 12 or stainless steel precision casting, mat. no. 1.4409/ CF-3M • Standard: Powder coating with polyurethane Option: 2 coats: Coat 1: epoxy-based; coat 2: Polyurethane • Stainless steel nameplate (1.4404/316L)
Mounting bracket	Steel, galvanized, stainless steel 1.4301/304, stainless steel 1.4404/316L

Construction for gauge pressure and absolute pressure (from the gauge pressure series)	
Process connection	• Connection pin G$^1/_2$A in accordance with DIN EN 837-1 • Female thread $^1/_2$-14 NPT • Oval flange (PN 160 (MAWP 2320 psi g)) with fastening screw thread: – $^7/_{16}$-20 UNF in accordance with EN 61518 – M10 in accordance with DIN 19213 • Oval flange (PN 420 (MAWP 2320 psi g)) with fastening screw thread: – $^7/_{16}$-20 UNF in accordance with EN 61518 – M12 in accordance with DIN 19213 • Male thread M20 x 1.5 and $^1/_2$-14 NPT
Electrical connection	Cable inlet using the following screwed joints: • M20 x 1.5 • ½-14 NPT • Han 7D/Han 8D connector[1)] • M12 connector

[1)] Han 8D is identical to Han 8U.

Construction for gauge pressure, with flush mounted diaphragm	
Weight (pressure transmitter without mounting flange)	Approx. 1.8 kg (3.9 lb) with aluminum enclosure Approx. 3.8 kg (8.3 lb) with stainless steel enclosure
Material	
• Wetted parts materials	
Process connection	Stainless steel, mat. no. 1.4404/316L
Seal diaphragm	Stainless steel, material no. 1.4404/316L or Alloy C276, material no. 2.4819
• Non-wetted parts materials	
Electronics housing	• Low-copper die-cast aluminum GD-AlSi 12 or stainless steel precision casting, mat. no. 1.4409/CF-3M • Standard: Powder coating with polyurethane D20 option: 2 coats: Coat 1: epoxy-based; coat 2: Polyurethane • Stainless steel nameplate (1.4404/316L)
Mounting bracket	Steel, galvanized, stainless steel 1.4301/304, stainless steel 1.4404/316L
Process connection	• Flanges as per EN and ASME • F&B and Pharma flange • BioConnect/BioControl • PMC style
Electrical connection	Cable inlet using the following screwed joints: • M20x1.5 • ½-14 NPTM • Han 7D/Han 8D connector[1)] • M12 connector

[1)] Han 8D is identical to Han 8U.

Construction for gauge pressure and absolute pressure (from the differential pressure series), differential pressure and flow rate	
Weight	Approx. 3.9 kg (8.5 lb) with aluminum enclosure Approx. 5.9 kg (13 lb) with stainless steel enclosure
Material	
• Wetted parts materials	
Seal diaphragm	Stainless steel, mat. no. 1.4404/316L, Alloy C276, mat. no. 2.4819, Monel 400, mat. no. 2.4360, tantalum or gold
Pressure caps and vents	Stainless steel, mat. no. 1.4408 to PN 160, mat. no. 1.4571/316Ti for PN 420, Alloy C22, 2.4602 or Monel 400, mat. no. 2.4360
O-ring	FKM (Viton) or optionally: PTFE, FEP, FEPM and NBR
• Non-wetted parts materials	
Electronics housing	• Low-copper die-cast aluminum GD-AlSi 12 or stainless steel precision casting, mat. no. 1.4409/CF-3M • Standard: Powder coating with polyurethane D20 option: 2 coats: Coat 1: epoxy-based; coat 2: Polyurethane • Stainless steel nameplate (1.4404/316L)
Pressure cap screws	Stainless steel ISO 3506-1 A4-70
Mounting bracket	Steel, galvanized, stainless steel 1.4301/304, stainless steel 1.4404/316L
Process connection	$^{1}/_{4}$-18 NPT female thread and flange connection with $^{7}/_{16}$-20 UNF fastening screw thread in accordance with EN 61518 or M10 fastening screw thread in accordance with DIN 19213 (M12 for PN 420 (MAWP 6092 psi))
Electrical connection	Screw terminals Cable inlet using the following screwed joints: • M20 x 1.5 • ½-14 NPT • Han 7D/Han 8D connector[1)] • M12 connector

[1)] Han 8D is identical to Han 8U.

Construction for level	
Weight	
• In accordance with EN (pressure transmitter with mounting flange, without tube)	Approx. 11 … 13 kg (24.2 … 28.7 lb) with aluminum enclosure Approx. 13 ... 15 kg (28.7 ... 33 lb) with stainless steel enclosure
• In accordance with ASME (pressure transmitter with mounting flange, without tube)	Approx. 11 … 18 kg (24.2 … 39.7 lb) with aluminum enclosure Approx. 13 ... 20 kg (28.7 ... 44 lb) with stainless steel enclosure
Material	
• Wetted parts materials	
Plus side	

Construction for level	
• Seal diaphragm on the mounting flange	Stainless steel, mat. no. 1.4404/316L, Monel 400, mat. no. 2.4360, Alloy B2, mat. no. 2.4617, Alloy C276, mat. no. 2.4819, Alloy C22, mat. no. 2.4602, tantalum, PTFE
• Sealing surface	Smooth as per EN 1092-1, form B1 or ASME B16.5 RF 125 … 250 AA for stainless steel 316L, EN 2092-1 form B2 or ASME B16.5 RFSF for the remaining materials
Sealing material in the pressure caps	
• For standard applications	FKM (Viton)
• For underpressure applications on the mounting flange	Copper
Minus side	
• Seal diaphragm	Stainless steel, mat. no. 1.4404/316L
• Pressure caps locking screws	Stainless steel, mat. no. 1.4408
• Locking screw	Stainless steel ISO 3506-1 A4-70
• O-ring	FKM (FKM (Viton))
• Non-wetted parts materials	
Electronics housing	• Low-copper die-cast aluminum GD-AlSi 12 or stainless steel precision casting, mat. no. 1.4409/CF-3M • Standard: Powder coating with polyurethane D20 option: 2 coats: Coat 1: epoxy-based; coat 2: Polyurethane • Stainless steel nameplate (1.4404/316L)
Pressure cap screws	Stainless steel ISO 3506-1 A4-70
Measuring cell filling	Silicone oil
• Mounting flange fill fluid	Silicon oil or a different design
Process connection	
• Plus side	Flange as per EN and ASME
• Minus side	$^{1}/_{4}$-18 NPT female thread and flange connection with M10 fastening screw thread in accordance with DIN 19213 (M12 for PN 420 (MAWP 6092 psi)) or $^{7}/_{16}$-20 UNF in accordance with EN 61518
Electrical connection	Screw terminals Cable inlet using the following screwed joints: • M20 x 1.5 • ½-14 NPT • Han 7D/Han 8D connector[1)] • M12 connector

[1)] Han 8D is identical to Han 8U.

8.7 Torques

Torques	
Terminal compartment	
• Connecting terminals	0.4 to 0.8 Nm (0.3 to 0.6 ft lb)
Cable glands/blanking plugs	
• Screw-in torque for plastic gland in all enclosures	4 Nm (3 ft lb)
• Screw-in torque for metal/stainless steel glands in aluminum/stainless steel enclosure	6 Nm (4.4 ft lb)
• Screw-in torque for NPT adapter made of metal/stainless steel in aluminum/stainless steel enclosure	15 Nm (11.1 ft lb)
• Tightening torque for union nut made of plastic	2.5 Nm (1.8 ft lb)
• Tightening torque for union nut made of metal/stainless steel	4 Nm (3 ft lb)
Screws for mounting bracket (option)	
• Tightening torque for thread M8 or $^{5}/_{16}$-24 UNF	18 Nm (13.2 ft lb)
• Tightening torque for thread M10 or $^{7}/_{16}$-20 UNF	36 Nm (26.5 ft lb)
Retaining screws for rotation of the enclosure	
• Tightening torque for aluminum enclosure	3.8 Nm (2.8 ft lb)
• Tightening torque for stainless steel enclosure	3.5 Nm (2.5 ft lb)

8.8 Display, keyboard and auxiliary power

Display and user interface	
Buttons	4 buttons for operation directly on the device
Display	• With or without integrated display (optional) • Cover with inspection window (optional)

Auxiliary power U_H	
	HART
Terminal voltage on pressure transmitter	• DC 10.5 V … 45 V • In the case of intrinsically safe operation 10.5 V … 30 V DC
Ripple	U_{SS} ≤ 0.2 V (47 … 125 Hz)
Noise	U_{eff} ≤ 1.2 mV (0.5 … 10 kHz)
Auxiliary power	–
Separate supply voltage	–

8.9 Certificates and approvals

Certificates and approvals	
Classification according to pressure equipment directive (PED 2014/68/EU)	• For gases of fluid group 1 and liquids of fluid group 1; complies with requirements of article 4, paragraph 3 (sound engineering practice) • Only for flow rate: For gases of Fluid Group 1 and liquids of Fluid Group 1; fulfills the basic safety requirements as per article 3, Para 1 (appendix 1); classified as category III, module H conformity evaluation by TÜV Nord
Drinking water	Available soon
• WRAS (England) • ACS (France) • DVGW (Germany) • NSF (USA)	
CRN (Canada)	Available soon
Explosion protection in accordance with NEPSI (China)	Available soon
Explosion protection in accordance with INMETRO (Brazil)	Available soon
BAM (Germany), oxygen expenditures	Available soon
Explosion protection	
• Intrinsic safety "i"	
Designation	Ex II 1/2 G Ex ia/ib IIC T4/T6 Ga/Gb
Permissible ambient temperature	-40 … +80 °C (-40 … +176 °F) Temperature class T4 -40 … +55 °C (-40 … +158 °F) Temperature class T6
Permissible temperature of medium	-40 … +100 °C (-40 … +212 °F) temperature class T4 -40 … +70 °C (-40 … +158 °F) temperature class T6
Connection	To a certified intrinsically safe circuit with the max. values: U_i = 30 V, I_i = 101 mA, P_i = 760 mW U_i = 29 V, I_i = 110 mA, P_i = 800 mW
Effective inner capacitance	C_i = 3.29 nF
Effective inner inductance	Li = 0.24 µH
• Flameproof enclosure encapsulation "d"	
Designation	Ex II 1/2G Ex ia/db IIC T4/T6 Ga/Gb
Permissible ambient temperature	-40 … +80 °C (-40 … +176 °F) temperature class T4 -40 … +70 °C (-40 … +158 °F) temperature class T6
Permissible temperature of medium	-40 … +100 °C (-40 … +212 °F) temperature class T4 -40 … +70 °C (-40 … +158 °F) temperature class T6
Connection	To a circuit with the operating values: U_H = 10.5 … 45 V DC, 4 ... 20 mA
• Dust explosion protection for zones 21, 22	

Certificates and approvals	
Designation	II 2D Ex tb IIIC T120 °C Db II 3D Ex tc IIIC T120 °C Dc
Permissible ambient temperature	-40 ... +80 °C (-40 ... +176 °F)
Permissible temperature of medium	-40 … +100 °C (-40 … +212 °F)
Max. surface temperature	120°C (248°F)
Connection	To a circuit with the operating values: U_H = 10.5 … 45 V DC, 4 ... 20 mA
• Dust explosion protection for Zone 20, 21, 22	
Designation	II 1D Ex ia IIIC T120 °C Da II 2D Ex ib IIIC T120 °C Db II 3D Ex ic IIIC T120 °C Dc
Permissible ambient temperature	-40 ... +80 °C (-40 ... +176 °F)
Permissible temperature of medium	-40 … +100 °C (-40 … +212 °F)
Connection	To a certified intrinsically safe circuit with the max. values: U_i = 30 V, I_i = 101 mA, P_i = 760 mW U_i = 29 V, I_i = 110 mA, P_i = 800 mW
Effective inner capacitance	C_i = 3.29 nF
Effective inner inductance	Li = 0.24 µH
• Type of protection for Zone 2 A power supply unit of intrinsically safe protection type "Ex ia" in zone 2 is sufficient to connect devices of intrinsically safe protection type [Ex ic].	
Designation	II 3G Ex ec IIC T4/T6 Gc
Permissible ambient temperature "ec"	-40 … +80 °C (-40 … +176 °F) temperature class T4 -40 … +40 °C (-40 … +104 °F) temperature class T6
Permissible temperature of medium	-40 … +100 °C (-40 … +212 °F) temperature class T4 -40 … +70 °C (-40 … +158 °F) temperature class T6
Connection "ec"	To a circuit with the operating values: U_n = 10.5 to 30 V, 4 ... 20 mA
• Explosion protection in accordance with FM	Available soon
Designation (XP/DIP) or IS; NI; S	CL I, DIV 1, GP ABCD T4 ... T6; CL II, DIV 1, GP EFG; CL III; CL I, ZN 0/1 AEx ia IIC T4 ... T6; CL I, DIV 2, GP ABCD T4 ... T6; CL II, DIV 2, GP FG; CL III
• Explosion protection as per CSA	Available soon
Designation (XP/DIP) or (IS)	CL I, DIV 1, GP ABCD T4 ... T6; CL II, DIV 1, GP EFG; CL III; Ex ia IIC T4 ... T6: CL I, DIV 2, GP ABCD T4 ... T6; CL II, DIV 2, GP FG; CL III

Appendix A

A

A.1 Technical support

Technical Support

If this documentation does not provide complete answers to any technical questions you may have, contact Technical Support at:

- Support request (http://www.siemens.com/automation/support-request)
- More information about our Technical Support is available at Technical support (http://www.siemens.com/automation/csi/service)

Internet Service & Support

In addition to our documentation, Siemens provides a comprehensive support solution at:

- Service&Support (http://www.siemens.com/automation/service&support)

Personal contact

If you have additional questions about the device, please contact your Siemens personal contact at:

- Partner (http://www.automation.siemens.com/partner)

To find the personal contact for your product, go to "All Products and Branches" and select "Products & Services > Industrial Automation > Process Instrumentation".

Documentation

You can find documentation on various products and systems at:

- Instructions and manuals (http://www.siemens.com/processinstrumentation/documentation)

See also

E-mail (mailto:support.automation@siemens.com)

Product information on SITRANS P in the Internet (http://www.siemens.com/sitransp)

Process instrumentation catalog (http://www.siemens.com/processinstrumentation/catalogs)

A.2 Certificates

You can find certificates on the Internet at Certificates (http://www.siemens.com/processinstrumentation/certificates) or on an included DVD.

Index

A

Ambient temperature, 89, 90, 91, 92
    Effect, 73, 83

B

Blowout valve, 46
Blowout valves, 49

C

Certificates, 17, 104
Cleaning, 56
Compact Operating Instructions, 103
Customer Support, (Refer to Technical Support)

D

Direct sunlight, 24
Disassembly, 33
Disposal, 59
Document history, 11
Documentation, 103

E

Electromagnetic compatibility, 89, 91, 92, 93
EMC, 89, 91, 92, 93

F

Flange, 29

H

Hazardous area
    Laws and directives, 17
    Qualified personnel, 19
Hotlline, (Refer to Support request)

I

Installation, 25
Instuctions and manuals, 103

L

Laws and directives
    Disassembly, 17
    Personell, 17
Layout of nameplate with general information, 13

M

Maintenance, 55
Manuals, 103
Modifications
    correct usage, 18
    improper, 18

N

Nameplate, 13

O

Operating Instructions, 103
Order supplement, 13

Q

Qualified personnel, 19

R

Remote seal
    Maintenance, 56
Return procedure, 59

S

Scope of delivery, 15
Service, 103
Service & Support, 103
    Internet, 103
Shut-off valve, 47, 48, 51, 52
Stabilizing valve, 49, 51, 52
Support, 103
Support request, 103

T

Technical Support, 103
    Partner,
    Personal contact, 103
Test certificates, 17

V

Vent valve, 51, 52

W

Warranty, 16