SIEMENS

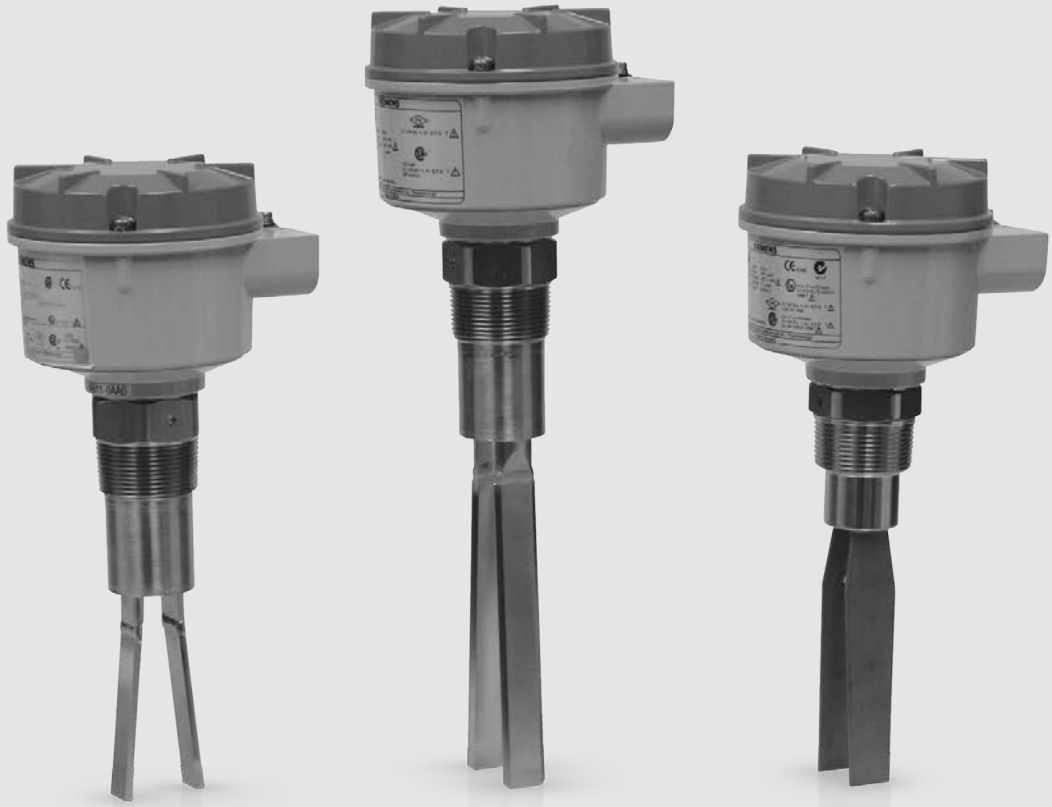

Operating instructions

SITRANS L

Point level switches

LVS100/LVS200

Edition 01/2019

www.siemens.com/processautomation

SIEMENS

SITRANS L

Point Level Switches SITRANS LVS100/200

Operating Instructions

Introduction 1

Description 2

Operating 3

Installation 4

Connecting 5

Maintenance 6

Technical data 7

Dimension drawings 8

Certificates and support A

7ML5735 (SITRANS LVS100 Standard)
7ML5731 (SITRANS LVS200 Standard)
7ML5732 (SITRANS LVS200 Short fork)
7ML5733 (SITRANS LVS200 Pipe extension)
7ML5734 (SITRANS LVS200 Cable extended)

01/2019

A5E44839609-AA

Legal information

Warning notice system

This manual contains notices you have to observe in order to ensure your personal safety, as well as to prevent damage to property. The notices referring to your personal safety are highlighted in the manual by a safety alert symbol, notices referring only to property damage have no safety alert symbol. These notices shown below are graded according to the degree of danger.

⚠ DANGER
indicates that death or severe personal injury **will** result if proper precautions are not taken.

⚠ WARNING
indicates that death or severe personal injury **may** result if proper precautions are not taken.

⚠ CAUTION
indicates that minor personal injury can result if proper precautions are not taken.

NOTICE
indicates that property damage can result if proper precautions are not taken.

If more than one degree of danger is present, the warning notice representing the highest degree of danger will be used. A notice warning of injury to persons with a safety alert symbol may also include a warning relating to property damage.

Qualified Personnel

The product/system described in this documentation may be operated only by **personnel qualified** for the specific task in accordance with the relevant documentation, in particular its warning notices and safety instructions. Qualified personnel are those who, based on their training and experience, are capable of identifying risks and avoiding potential hazards when working with these products/systems.

Proper use of Siemens products

Note the following:

⚠ WARNING
Siemens products may only be used for the applications described in the catalog and in the relevant technical documentation. If products and components from other manufacturers are used, these must be recommended or approved by Siemens. Proper transport, storage, installation, assembly, commissioning, operation and maintenance are required to ensure that the products operate safely and without any problems. The permissible ambient conditions must be complied with. The information in the relevant documentation must be observed.

Trademarks

All names identified by ® are registered trademarks of Siemens AG. The remaining trademarks in this publication may be trademarks whose use by third parties for their own purposes could violate the rights of the owner.

Disclaimer of Liability

We have reviewed the contents of this publication to ensure consistency with the hardware and software described. Since variance cannot be precluded entirely, we cannot guarantee full consistency. However, the information in this publication is reviewed regularly and any necessary corrections are included in subsequent editions.

Siemens AG
Division Process Industries and Drives
Postfach 48 48
90026 NÜRNBERG
GERMANY

Document order number: A5E44839609
Ⓟ 01/2019 Subject to change

Copyright © Siemens AG 2012.
All rights reserved

Table of contents

1 Introduction 5
1.1 Purpose of this documentation 5
2 Description 6
2.1 SITRANS LVS100, SITRANS LVS200 - standard version 6
2.2 SITRANS LVS200 - liquid/solid interface version 6
2.3 SITRANS LVS200 - pipe extension version 6
2.4 Product features 7
2.5 Product applications 7
2.6 Principle of operation 7
3 Operating 9
3.1 Signal output delay 9
3.2 Test function 9
3.3 Vibration amplitude diagnosis 12
3.4 Current output setting 12
3.5 Buildup detection (8/16 mA or 4 to 20 mA version) 13
4 Installation 14
4.1 Mounting 14
4.2 Process cautions 17
4.3 Temperature isolator option (LVS100/200) 18
5 Connecting 20
5.1 Connection recommendations 21
5.2 Precautions 21
5.3 Power supply specifications 26
5.4 Sensitivity 27
5.5 Switching logic 28
5.6 SITRANS LVS200 Pipe extension version 30
5.6.1 Extension tube manufacture 30
5.6.2 Extension tube dimensions 31
5.6.3 Assembly 33
5.6.4 Assembly overview drawing 36
6 Maintenance 37
6.1 Unit repair and excluded liability 37

7 Technical data 38
8 Dimension drawings 42
8.1 SITRANS LVS100 42
8.2 Zone classification 43
8.3 SITRANS LVS200 44
8.4 Zone classification 45
8.5 SITRANS LVS200 Forks 46
A Certificates and support 47
A.1 Technical support 47
A.2 Certificates 47
Index 48

Introduction 1

1.1 Purpose of this documentation

These instructions contain all information required to commission and use the device. Read the instructions carefully prior to installation and commissioning. In order to use the device correctly, first review its principle of operation.

The instructions are aimed at persons mechanically installing the device, connecting it electronically, configuring the parameters and commissioning it, as well as service and maintenance engineers.

Note

- This manual applies to SITRANS LVS100 and SITRANS LVS200 only.
- Product details and instructions in this manual relate to both SITRANS LVS100 and SITRANS LVS200 unless otherwise stated.
- This product is intended for use in industrial areas. Operation of this equipment in a residential area can cause interference to several frequency based communications.

Description 2

The SITRANS LVS100 and SITRANS LVS200 are available in a standard version, with the SITRANS LVS200 offering two additional versions.

2.1 SITRANS LVS100, SITRANS LVS200 - standard version

SITRANS LVS100/200 standard version is a vibrating level switch that detects high or low levels of dry bulk solids in bins, silos, or hoppers. It has a compact design that allows it to be top or side mounted and the vibrating fork ensures that the tines are kept clean.

- SITRANS LVS100 is an entry level solids fork with a bulk density limit starting at 30 g/l (3.8 lb/ft^3). The LVS100 is available with rigid extension options to 4 000 mm (157").
- SITRANS LVS200 provides several output options for indication of point level with products such as lime, styrofoam, flour, and plastic granules, starting at 20 g/l (1.2 lb/ft^3). It handles a broader range of applications and is able to measure bulk densities of less than 5g/l. In addition, the LVS200 has a wider range of process configurations. SITRANS LVS200 standard length fork is available with variable cable extension lengths to a maximum of 20 000 mm (787") (cable extensions for top mount applications only). An optional longer fork is available for increased sensitivity.

2.2 SITRANS LVS200 - liquid/solid interface version

The SITRANS LVS200, liquid/solid interface version, is a vibrating level switch that can also detect settled solids within liquids, or solids within confined spaces such as feed pipes. This version is designed to ignore liquids in order to detect the interface between a solid and a liquid. The design incorporates a short fork, and is also available with variable cable extension lengths to a maximum of 7000 mm (275.59"), for top mount applications only.

2.3 SITRANS LVS200 - pipe extension version

The SITRANS LVS200, pipe extension version, is a vibrating level switch that incorporates a customer supplied pipe extension [maximum length 3800 mm (150")] with the standard or liquid/solid (short) LVS200 fork and electronics. This allows for separation of the electronics and tuning fork for applications requiring a rigid extension. See SITRANS LVS200 Pipe Extended Version (Page 30) for information on assembly.

2.4 Product features

- High resistance to mechanical forces
- Strong vibration resistance to high bulk material loads
- Rotatable enclosure
- LVS100: R 1½" (BSPT); 1¼" NPT (Taper) threaded connection
- LVS200: Stainless steel 1½” NPT or R 1½” (BSPT) threaded connection, or R 2" (BSPT) or NPT sliding sleeve. DN 100 and 2, 3, 4" ASME flange and Triclamp 2" options available.
- Suitable for high or low density material

LVS100 standard version	30 g/l (1.9 lb/ft ^{3}) min.
LVS200 standard version	20 g/l (1.2 lb/ft ^{3}) min.
LVS200 standard version with low density fork	5 g/l (0.3 lb/ft ^{3}) min.
LVS200 liquid/solid interface version	50 g/l (3.0 lb/ft ^{3}) min.

2.5 Product applications

- Dry lime, Styrofoam, flour, plastic granules
- High or low density, dry bulk materials
- Interface detection of a solid within a liquid (filter beds)
- Flow or no flow detection in pipe using liquid/solid LVS200 version

2.6 Principle of operation

A signal from the electronic circuit excites a crystal in the probe, causing the fork to vibrate. If the fork is covered by material, the change in vibration is detected by electronic circuitry which causes the relay to change state after a one second delay. When the material no longer reaches the tines, full vibration resumes and the relay reverts to its normal state.

WARNING

Do not use as a safety device

This product is designed as a Pressure Accessory per Directive 2014/68/EU and is not intended for use as a safety device.

WARNING

Chemical compatibility

Materials of construction are chosen based on their chemical compatibility (or inertness) for general purposes. For exposure to specific environments, check with chemical compatibility charts before installing.

Operating

3

Note

The signal output and test options listed below apply only to specific power supply options.

3.1 Signal output delay

Universal voltage (DPDT) model

The signal output can be delayed and is adjustable from 0 to 30 seconds. Turn the potentiometer clockwise to increase the delay time.

Potentiometer T1: Delay when output switches from fork covered to uncovered.

Potentiometer T2: Delay when output switches from fork uncovered to covered.

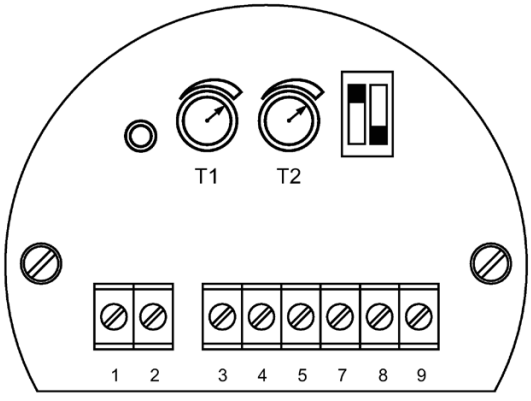

3.2 Test function

NAMUR model (IEC 60947-5-6) and 8/16 mA or 4 to 20 mA model

If the fork is uncovered, pressing this button will stop the vibration and the signal output will switch to indicate a covered fork. You can test the vibration and the electronics without removing the LVS200 from the vessel. If the fork is covered, pressing the button has no effect.

NAMUR model

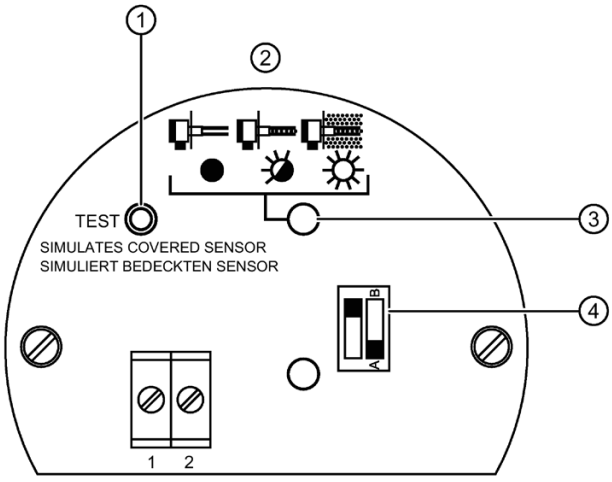

① Test button
② Electronic module
③ Diagnostic LED
④ Sensitivity adjustment:
B = factory setting
A = decreased sensitivity

8/16 or 4 to 20 mA model

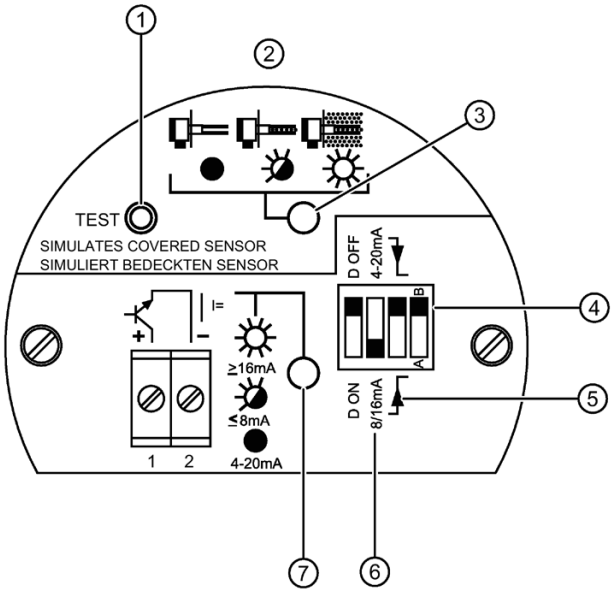

① Test button

② Sensor switches at high level

Fail-safe function will default to full signal

Sensor switches at low level

Fail-safe function will default to empty signal

③ Diagnostic LED

④ Sensitivity adjustment:

B = factory setting

A = decreased sensitivity

⑤ Filling or emptying

⑥ Output setting

⑦ Signal output LED

3.3 Vibration amplitude diagnosis

NAMUR module (IEC 60947-5-6) and 8/16 mA or 4 to 20 mA model

Measurement quality is related to the vibration amplitude of the fork. The diagnostic LED indicates the quality of the vibration being sent to the LVS200 electronics.

- Diagnostic LED off: measurement quality is good. The vibration amplitude is strong.
- Diagnostic LED blinking: measurement quality is poor and vibration amplitude is decreasing as fork becomes encrusted. When this happens, set the sensitivity switch to decreased sensitivity.
- Diagnostic LED on: vibration has stopped and fork is fully encrusted with material.

3.4 Current output setting

8/16 mA

The chart below illustrates the output current when:

- Fork is clean
- Fork is encrusted: weak vibration amplitude is shown
- Fork is fully encrusted and vibration has stopped.

Diagno-sis Set-ting	D Off	I = 16 mA	I = 8 mA	I = 16 mA	I = 8 mA	I = 8 mA	I = 16 mA
	D On			I = 20 mA	I = 6 mA		
	Signal output LED						
	Diagnosis LED						

The output current can indicate weak vibration amplitude with the diagnosis setting **D ON.** If the diagnosis is set to **D OFF**, the output will be either 8 mA or 16 mA depending on high or low level settings.

If the diagnosis is set to **D ON**, the output will change from 16 to 20 mA and from 8 to 6 mA if the vibration is weak. This output can be passed to an external 4 to 20 mA output. There is an internal delay of 10 seconds before the change happens, so that the external output does not indicate a weak vibration when the vibration is stopped and started during normal measurement operation.

3.5 Buildup detection (8/16 mA or 4 to 20 mA version)

With the 4 to 20 mA setting, you can recognize material buildup on the fork using a PLC or data logger. In this mode, the Diagnostic setting has no influence. The LED showing signal output is off.

- **20 mA:** The fork is clean.
- **<20 mA and >12/12.5 mA:** The vibration amplitude is decreased by the material buildup.
- **<12/12.5 mA and >7/8 mA:** This range indicates a weak vibration. The internal LED showing diagnosis begins blinking to indicate a weak signal. If you are using a PLC to evaluate the echo, delay the response time to this indicator for approximately 10 seconds. A hysteresis of 0.5 mA (between 12 and 12.5 mA) is recommended.
- **7/8 mA:** This point indicates that the fork is mostly encrusted.
- **6 mA:** This point indicates that the fork is fully encrusted.

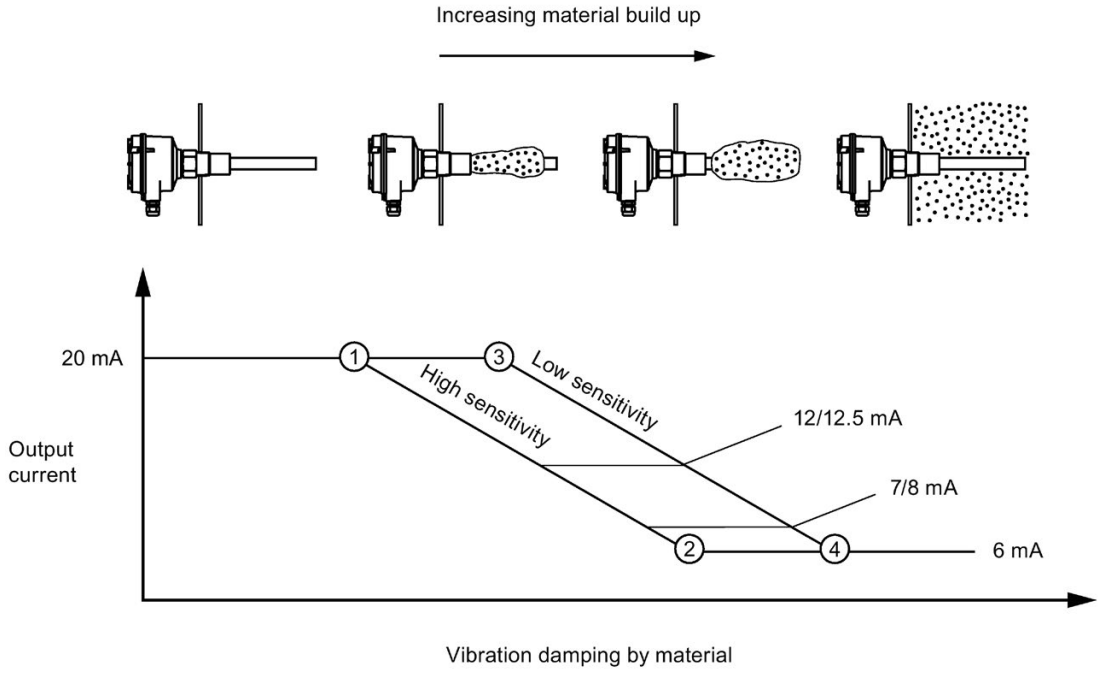

With setting "high sensitivity"

① Amplitude is 100%

② Amplitude is 0%

With setting "low sensitivity"

③ Amplitude is 100%

④ Amplitude is 0%

Installation

4

4.1 Mounting

- Installation shall be performed by qualified personnel and in accordance with local governing regulations.
- Do not bend, shorten or extend the tines.
- Position the tines using a 50 mm open-end wrench when installing the process connection (do not turn the housing). When side mounting SITRANS LVS100/200, position the tines vertically, with the tine orientation marking facing up or down.
- In pressure applications, use PTFE tape or other appropriate sealant to seal tapered threaded connections.
- After mounting, ensure the cable entries point downward to prevent water entering the housing.
- For the SITRANS LVS100/200 extended model, the torque due to material loading at the mounting point may not exceed 250 Nm.
- Mounting torque for the 1½" thread connection may not exceed 80 Nm.

WARNING

LVS100 and LVS200

- This product is designated as a Pressure Accessory per Directive 2014/68/EU and is not intended for use as a safety device.
- Improper installation may result in loss of process pressure.
- To install devices in hazardous locations, observe all valid installation regulations.
- For Dust Ex installations: Before opening the device lid, ensure there are no deposits present.
- Do not remove lid while circuits are live.
- Install the SITRANS LVS100/200 so mechanical friction or impact does not cause sparks between the aluminum enclosure and steel vessel.

WARNING

LVS200

- Installation in Zone 0 (electronics: NAMUR): The intrinsic safe supply circuit must have galvanic isolation to a non- intrinsically safe area. Otherwise, provide protection for the device against lightning strikes (see EN 60079-14).
- Power supply (electronics: NAMUR): Intrinsically safe protection is only valid when connected to a certified intrinsically safe power supply.
- For the LVS Pipe extended and cable extended models with Namur electronics for gas hazardous approvals: When mounting the units on a vessel lid that separates Zone 0 (Cat. 1G) from Zone 1 (Cat 2G), the units have no safe separation between Zone 0 and Zone 1. Gas can pass from Zone 0 through the unit to Zone 1.

SITRANS LVS100/200 is normally mounted into the vessel top for full detection, or through the tank wall at the detection level, for full, demand, or empty detection.

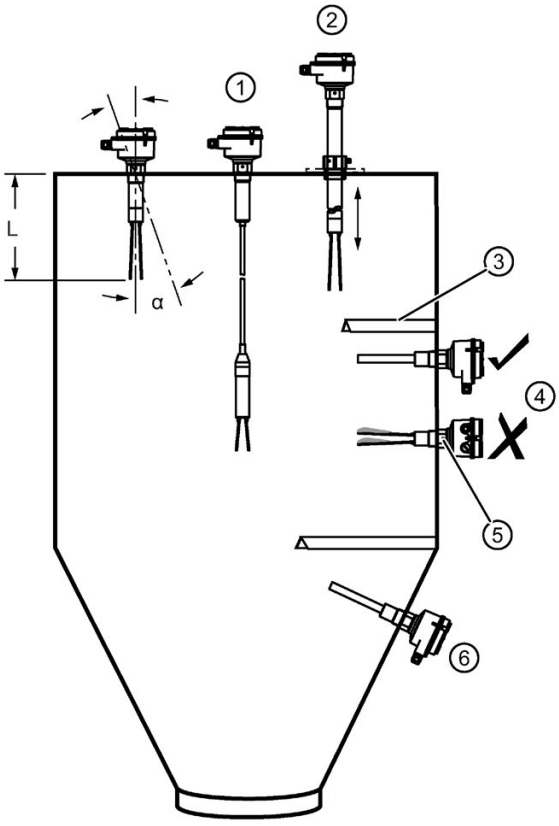

Position tines vertically to avoid product buildup: use a 50 mm open-end wrench to turn the process connection until the tine orientation marking faces up or down.

Use angle mounting for flowing material only. If angle mounting is required with high material loading, customer-supplied protection from falling material must be in place.

① Cable extension version

② Rigid extension with sliding sleeve

③ Protection in case of high material loading.

④ Cable gland faces downward to avoid water penetration.

⑤ Tine orientation marking facing sideways.

⑥ Angle mounting

max. deviation from vertical α	max. length L
5°	4 m
45°	1.2 m
>45°	0.6 m

4.2 Process cautions

CAUTION
Falling material Locate SITRANS LVS100/200 out of path of falling material OR Protect shaft and tines from falling material

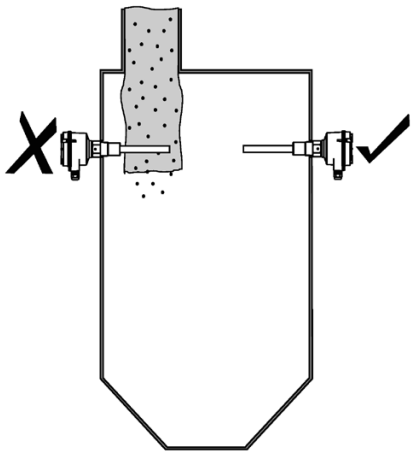

OR

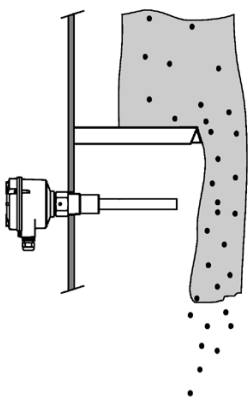

4.3 Temperature isolator option (LVS100/200)

When installed with the temperature isolator option, SITRANS LVS100/200 can operate in higher ambient temperatures.

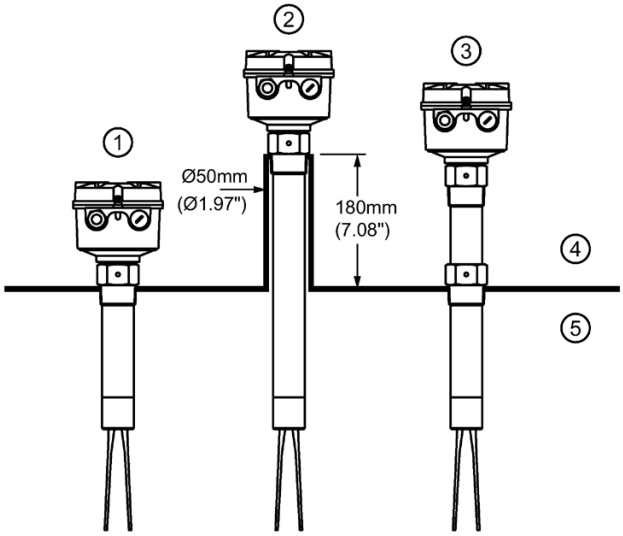

① Installed without temperature isolator, process connection at surface
② Installed without temperature isolator, process connection above surface
③ Installed with temperature isolator option
④ $T_{amb.}$
⑤ $T_{process}$

Installing SITRANS LVS100/200 with the temperature extension allows the device to be operated at higher ambient temperatures, ③, than would be possible otherwise, ①.

Process temperature (LVS100)

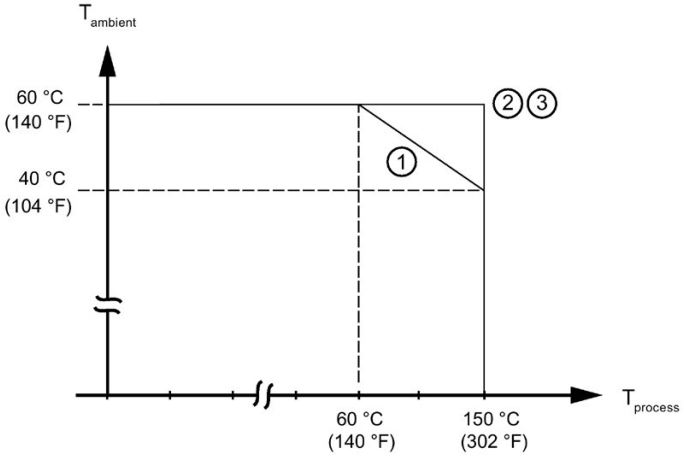

① Installed without temperature isolator, process connection at surface
② Installed without temperature isolator, process connection above surface
③ Installed with temperature isolator option

Process temperature (LVS200)

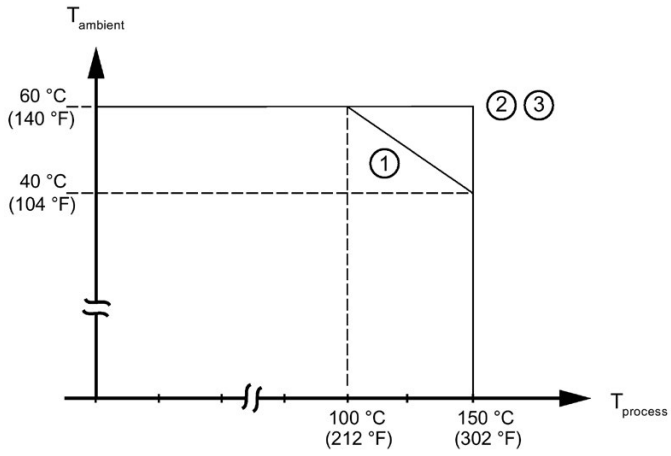

① Installed without temperature isolator, process connection at surface
② Installed without temperature isolator, process connection above surface
③ Installed with temperature isolator option

Connecting

5

WARNING

Wiring safety precautions

- Open SITRANS LVS100/200 only when supply voltage is switched off.
- All field wiring must have insulation suitable for at least 250 V AC.
- A disconnect switch must be in close proximity to the equipment and within easy reach of the operator.
- Unused cable conduit fittings must be locked with a closing element or plug.
- Observe all pertinent rules and regulations in the country of installation.

European requirements

Cable gland/closing element: The screwed cable gland and closing element must have the following specifications: Ingress protection IP66, temperature range from -40 to 70 °C (-40 to 158 °F), UL or VDE certified (depending on the country where the unit is installed), pull relief.

- Make sure the screwed cable gland safely seals the cable and that it is tight (danger of water intrusion). Cable glands that are not used have to be locked with a closing element.

Conduit system: In case of using a conduit system (with NPT thread) instead of a cable gland, the regulations of the country where the unit is installed must be observed. The conduit must have a tapered thread either 1/2" NPT or 3/4" NPT in accordance with the unit and ANSI B 1.20.1. Not used inlets must be closed tight with a metal closing element.

Cable glands and conduit system for ATEX/IECEx (Dust and Gas Hazardous Locations): Installation according to the regulations of the country where the unit is installed.

- Not used entries have to be closed with blanking elements certified for this purpose. Where available, the factory provided parts must be used. A strain relief must be provided for the field wiring cables, when the device is installed with the factory provided cable glands.
- The diameter of the field wiring cable must match to the clamping range of the cable clamp.
- If other than the factory provided parts are used, the following must be ensured:
  - The parts must have an approval adequate to the approval of the level sensor (certificate and type of protection).
  - The approved temperature range must be from the min. ambient temperature of the level sensor to the max. ambient temperature of the level sensor increased by 10K.
  - The parts must be mounted according to the instructions of the supplier.

Conduit systems for FM and CSA (Dust and Gas Hazardous Locations)

General requirements: In addition the regulations of the country must be observed. The used flameproof seals and blanking elements must have an adequate type approval and a temperature range of at least -40 to 80 °C (-40 to 176 °F). In addition, they shall be suitable for the conditions and correctly installed. Where available, the provided original parts of the manufacturer must be used.

5.1 Connection recommendations

- Use a fuse for the signal output (max. 10 A).
- Provide protection for relay contacts to protect the device against spikes if inductive loads are connected.

5.2 Precautions

- Before opening the lid, ensure there are no dust deposits around SITRANS LVS100/200, and that the atmosphere around the instrument is settled.
- Make sure the main voltage does not exceed the maximum voltage listed on the product label.
- Ensure that no more than 8 mm of each wire is stripped (to avoid danger of contact with live parts).
- Ensure the boots for protecting cable terminations are no longer than 8 mm (to avoid danger of contact with live parts).
- For installation of the 3-wire PNP electronics (Protection Class III), the insulation of the connected power supply and output load must meet the relevant standards.

Universal voltage (DPDT relay) (LVS100)

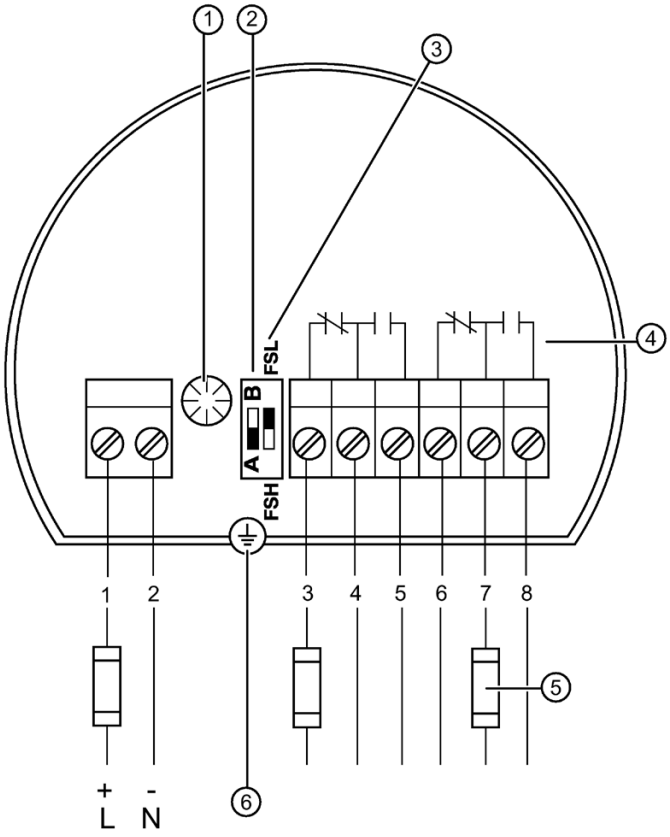

① LED

② sensitivity adjustment
B = factory setting,
A = decreased sensitivity

③ FSH/FSL adjustment

④ alarm output relays

⑤ fuses: max. 10 A, fast or slow, HBC, 250 V

⑥ protective earth terminal

Universal voltage (SPDT relay) (LVS200)

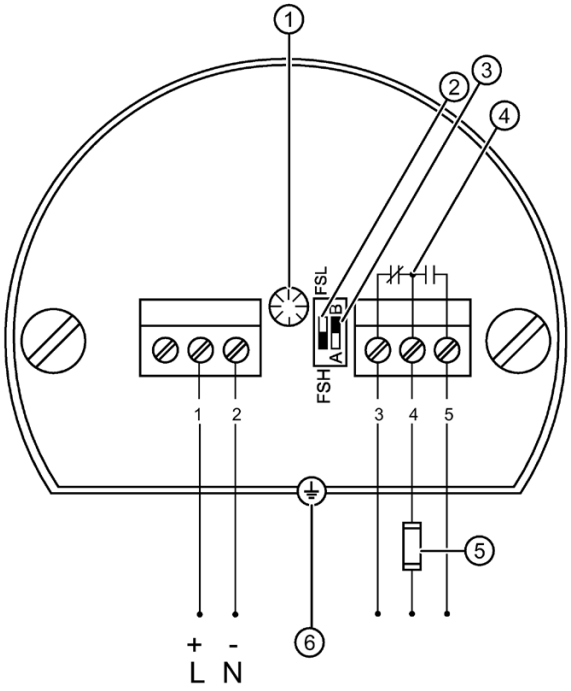

① LED
② FSH/FSL adjustment
③ sensitivity adjustment
B = factory setting,
A = decreased sensitivity
④ alarm output relay
⑤ fuses: max. 10 A, fast or slow, HBC, 250 V
⑥ protective earth terminal

Universal voltage (DPDT relay) (LVS200)

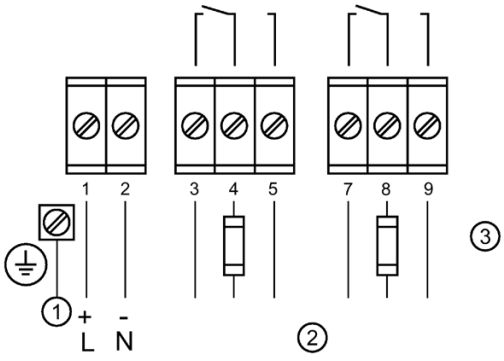

① PE
② alarm output relays
③ fuses: max. 10 A, fast or slow, HBC, 250 V

3-wire PNP (LVS200)

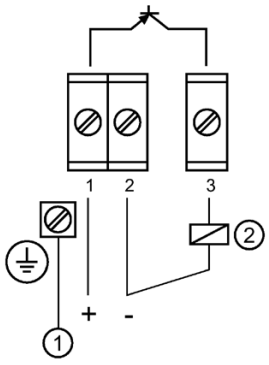

① PE
② load

2-wire (LVS200)

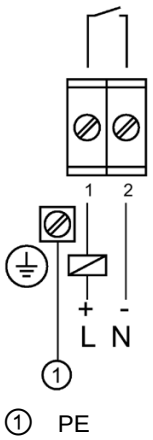

① PE

NAMUR IEC 60947-5-6 (LVS200)

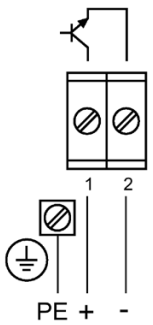

8/16 mA or 4 to 20 mA (LVS200)

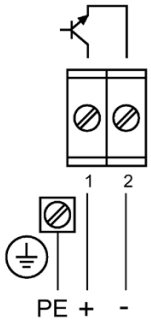

5.3 Power supply specifications

Universal voltage (DPDT relay) (LVS100)	AC: terminal 1: L terminal 2: N 19 to 230 V AC, ± 10 %, 50 to 60 Hz, 22 VA DC: terminal 1: + terminal 2: - 19 to 40 V DC, ± 10 %, 2 W
Universal voltage (SPDT relay) (LVS200)	AC: terminal 1: L terminal 2: N 19 to 230 V AC, + 10 %, 50 to 60 Hz, 8 VA DC: terminal 1: + terminal 2: - 19 to 55 V DC, + 10 %, 1.5 W
Universal voltage (DPDT relay) (LVS200)	AC: terminal 1: L terminal 2: N 19 to 230 V AC, + 10 %, 50 to 60 Hz, 18 VA DC: terminal 1: + terminal 2: - 19 to 55 V DC, + 10 %, 2 W
3-wire PNP (LVS200)	DC: terminal 1: + terminal 2: - 18 to 50 V DC, + 10 %, 1.5 W
2-wire (LVS200)	AC: terminal 1: L terminal 2: N 19 to 230 V AC, + 10 %, 50 to 60 Hz, 1.5 VA DC: terminal 1: + terminal 2: - 19 to 230 V DC, + 10 %, 1 W
NAMUR IEC 60947-5-6 (LVS200)	ca. 7 to 9 V DC
8/16 mA or 4 to 20 mA (LVS200)	DC: terminal 1: + terminal 2: - 12.5 to 36 V DC, + 0 %

5.4 Sensitivity

If the measured material tends to cake or build up, the sensitivity adjustment switch can be set to position A to decrease the sensitivity of the probe (factory setting is position B).

The sensitivity for interface applications should be set to position B, while the setting for high-flow applications should be position A.

LVS100

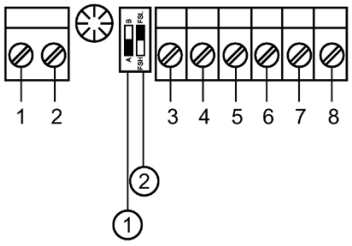

① sensitivity adjustment:
B = factory setting
A = decreased sensitivity

② FSH/FSL adjustment or High/Low Alarm setting

LVS200

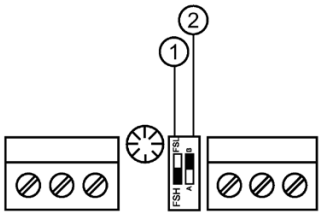

① FSH/FSL adjustment or High/Low Alarm setting (NAMUR)
② sensitivity adjustment:
B = factory setting
A = decreased sensitivity

5.5 Switching logic

Probe uncovered

Model	Signal output failsafe - low	Signal output failsafe - high
LVS100		
DPDT relay	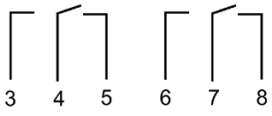	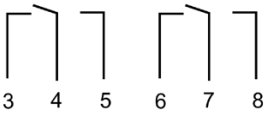
LVS200		
SPDT relay	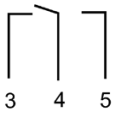	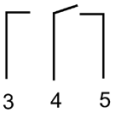
LVS200		
DPDT relay	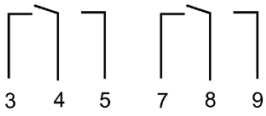	
3-wire PNP		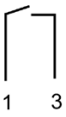
2-wire		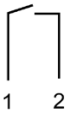

Model	Signal output failsafe - low	Signal output failsafe - high
8/16 mA	I = 16 mA	I = 8 mA
Signal Output LED		
	Low alarm setting	High alarm setting
NAMUR IEC 60947-5-6	I < 1 mA 1 2	I > 2.2 mA 1 2
Signal Output LED		

Probe covered

Model	Signal output failsafe - low	Signal output failsafe - high
LVS100		
DPDT relay	3 4 5 6 7 8	3 4 5 6 7 8
LVS200		
SPDT relay	3 4 5	3 4 5
LVS200		
DPDT relay	3 4 5 7 8 9	3 4 5 7 8 9
3-wire PNP	1 3	1 3

Model	Signal output failsafe - low	Signal output failsafe - high
2-wire		
8/16 mA	I = 8 mA	I = 16 mA
Signal Output LED		
	Low alarm setting	High alarm setting
NAMUR IEC 60947-5-6	I > 2.2 mA 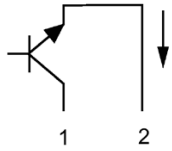	I < 1 mA 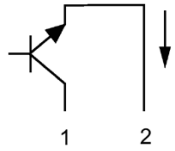
Signal Output LED		

5.6 SITRANS LVS200 Pipe extension version

5.6.1 Extension tube manufacture

Requirements for the extension tube

- Material: stainless steel 1.4301 (SS304) or 1.4305 (SS301) or 1.4571 (SS316Ti) or 1.4404 (SS316L)
- The tube must be manufactured from one single piece. It is not recommended to weld two or more pieces together.
- Carefully observe max. length, diameter, wall thickness, thread, tolerances as specified in the drawing.
- All sharp edges must be removed to protect the cable and sealing rings.

Thread testing

Each thread must be tested with no-go ring gauge according to standard DIN ISO 228-1 (G1“) (G-version) or ANSI B 1.20.1 (NPT 1“) (NPT version)

5.6.2 Extension tube dimensions

Version with G1" (DIN ISO 228-1) thread

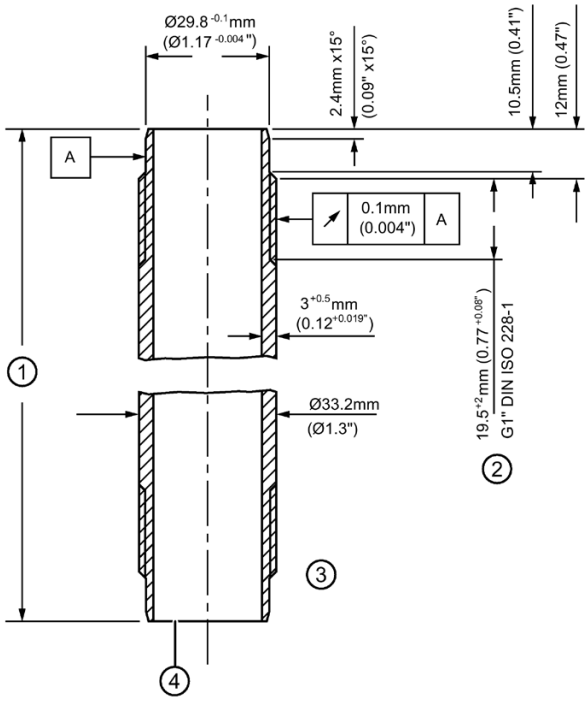

① Pipe length x

LVS200 (7ML5733 with short fork, application type 2, liquids/solids interface): X = L - 180 mm (X = L - 7.1")

LVS200 (7ML5733 with standard fork, application type 1): X = L - 250 mm (X = L - 9.8")

LVS200 (7ML5733 with standard fork, application type 1 and z option K05 or G01, enhanced sensitivity): X = L - 275 mm (X = L - 10.8")

Note: L is the total extension length

② Effective thread length

③ Same as other end

④ Free from burrs

Version with 1" (ANSI B 1.20.1.) NPT thread

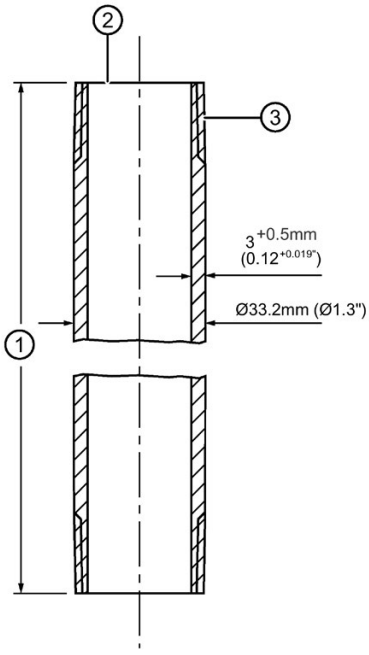

① Pipe length x

LVS200 (7ML5733 with short fork, application type 2, liquids/solids interface): X = L - 190 mm (X = L - 7.5")

LVS200 (7ML5733 with standard fork, application type 1): X = L - 260 mm (X = L - 10.2")

LVS200 (7ML5733 with standard fork, application type 1 and z option K05 or G01, enhanced sensitivity): X = L - 285 mm (X = L - 11.2")

Note: L is the total extension length

② Free from burrs

③ Thread 1” NPT ANSI B 1.20.1

Effective thread length: 17.3 +2 mm (0.68 +0.08") (dimension L2 according to standard ANSI B 1.20.1)

5.6.3 Assembly

Suggested tools:

- medium Phillips or 6 to 8 mm (¼”) flat screwdriver
- 3 mm (1/8”) flat screwdriver
- wire cutters
- wire strippers
- terminal crimper
- 36 mm open end wrench
- pipe wrench

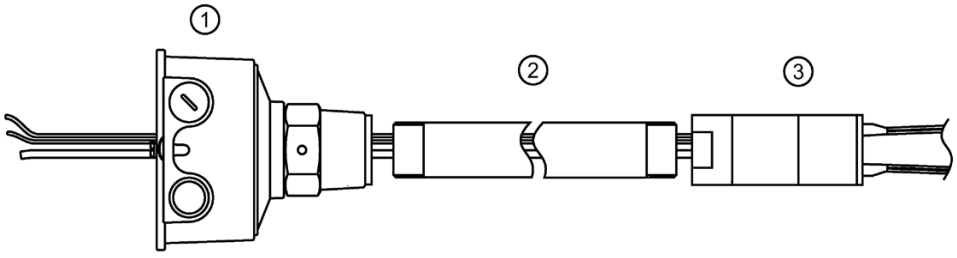

① Enclosure
② Customer supplied pipe extension
③ Fork assembly

1. Open the enclosure lid; remove electronics module.
2. Lead the sensor cable through the customer supplied 1" tube and enclosure.
3. Assemble the fork assembly, the pipe extension, and the enclosure using the 36 mm open end wrench. Seal the pipe threads with an appropriate sealant.

Note

Do not turn fork assembly. Do not bend the fork during assembly.

4. Line up the fork and the tine orientation marking as shown in dimension drawing. (The tine orientation marking on the process connection is to identify the vertical orientation of the fork.)

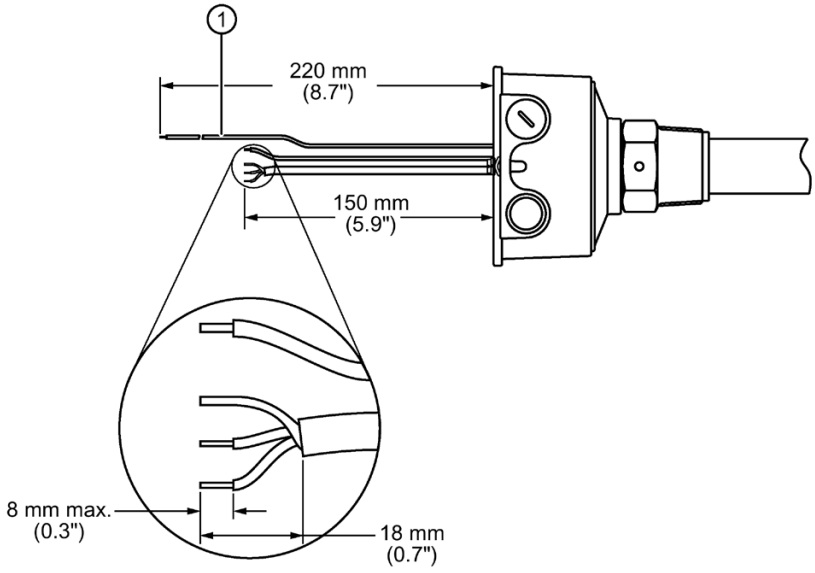

① Earth cable (green/yellow)

5. Shorten sensor cable to a free length of 150 mm (5.9").
6. Shorten earth cable to a free length of 220 mm (8.7").
7. Prepare sensor cable as shown above, stripping a maximum of 8 mm from each wire.

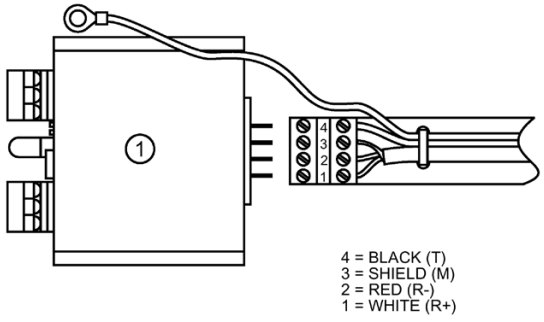

① Electronics module, flat side up

8. Connect the sensor cable to the terminal connection board shown above.
9. Secure the sensor cable with cable ties.

10. Crimp the ring terminal 4 mm (0.19") to sensor earth cable.

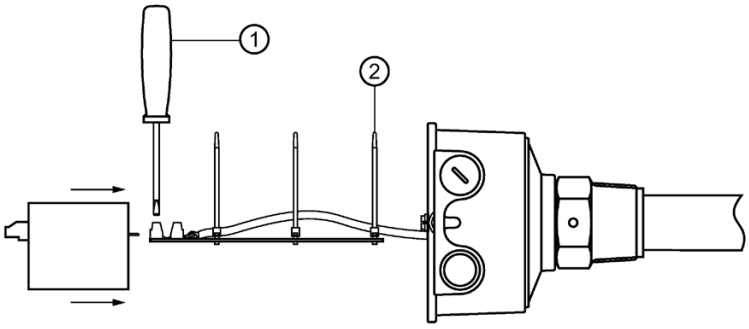

① 3 mm (1/8”) screw driver
② Cable ties

11. Connect electronics module and terminal connection board. Be sure that all terminals are tight.

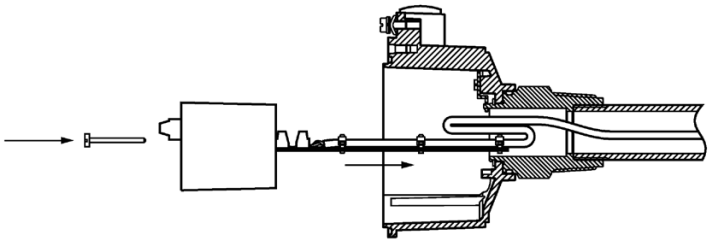

12. Insert the electronics module into the housing. The terminal connection board is used to guide the cable into the extension tube.
13. Fold cable as shown in diagram above.
14. Secure the electronics module as shown in diagram below.

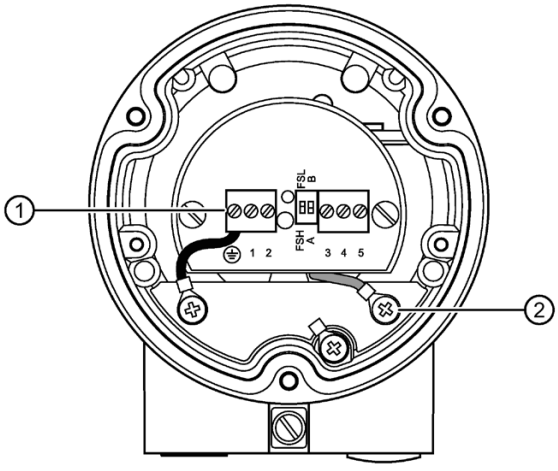

① Connect protection earth of the enclosure to terminal of the electronics module.
② Connect earth cable of the fork to the electronics earth terminal.

5.6.4 Assembly overview drawing

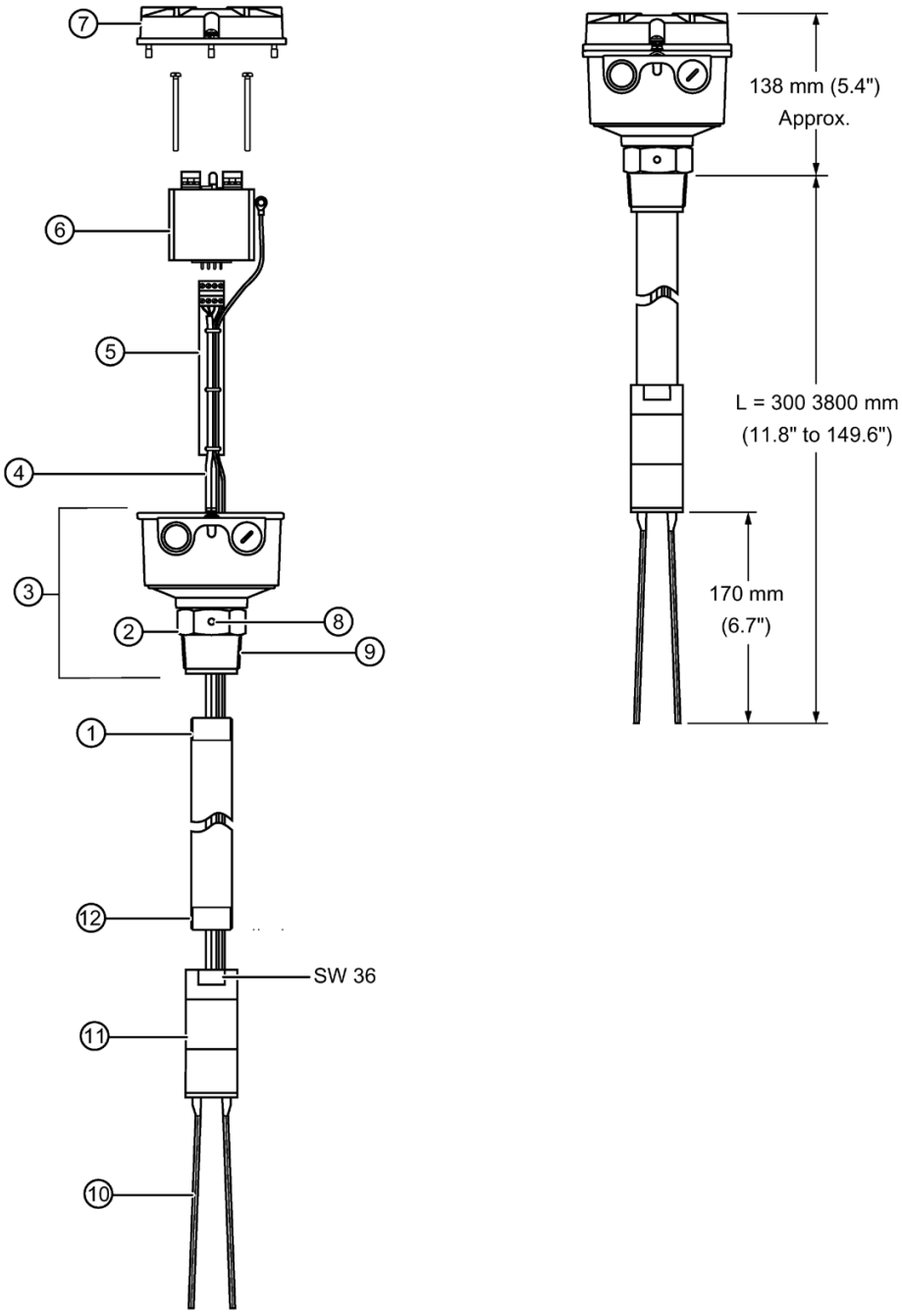

① Thread G1” or 1" NPT (use appropriate thread sealant)
② Process connection
③ Enclosure assembly
④ Sensor cable
⑤ Terminal connection board
⑥ Electronics module
⑦ Lid
⑧ Tine orientation marking
⑨ Process thread 1 ½” NPT (taper) or R 1 ½” (BSPT)
⑩ Fork
⑪ Fork assembly
⑫ Thread G1” or 1" NPT (use appropriate thread sealant)

Maintenance 6

SITRANS LVS100/200 require no maintenance or cleaning under normal operating conditions. Under severe operating conditions, the tines may require periodic cleaning. Brush off any accumulated deposits, taking care not to bend the tines.

6.1 Unit repair and excluded liability

All changes and repairs must be done by qualified personnel, and applicable safety regulations must be followed. Please note the following:

- The user is responsible for all changes and repairs made to the device.
- All new components must be provided by Siemens.
- Restrict repair to faulty components only.
- Do not re-use faulty components.

Technical data

7

Note

Device specifications

Siemens makes every attempt to ensure the accuracy of these specifications but reserves the right to change them at any time.

Power	LVS100	19 to 230 V AC, ±10 %, 50 to 60 Hz, 22 VA / 19 to 40 V DC, ±10 %, 2 W	
	LVS200	19 to 230 V AC, +10 %, 50 to 60 Hz, 1.8 VA / 19 to 55 V DC, +10 %, 1.5 W	
		18 to 50 V DC 3-wire PNP	
		7 to 9 V DC (requires NAMUR switch amplifier) NAMUR IEC 60947-506, 2-wire	
		8/16 mA or 4 to 20 mA; 12.5 to 35 V DC, 2-wire	
Performance	Measuring frequency		
	LVS100	standard	approx. 200 Hz
	LVS200	standard	approx. 125 Hz
		liquid/solid interface version	approx. 350 Hz
		enhanced sensitivity option	approx. 90 Hz
	Signal delay	probe uncovered to covered	approx. 1 second
		probe covered to un-covered	approx. 1 to 2 seconds
	Relay delay (DPDT version) (LVS200)	adjustable up to 30 seconds	
	Sensitivity	high or low, switch selectable	
	Minimum material density		
	LVS100	standard version	approx. 30 g/l (1.9 lb/ft³)
	LVS200	standard version	approx. 20 g/l (1.2 lb/ft³)
		standard version with low density fork	approx. 5 g/l (0.3 lb/ft³)
		liquid/solid interface version	approx. 50 g/l (3 lb/ft³)
	Maximum particle size	LVS100	8 mm (0.32")
		LVS200	10 mm (0.39")

Alarm output	LVS100	version with 2 relays	DPDT relay fail-safe: high or low, switch selectable relay 8 A at 250 V AC, non-inductive / relay 5 A at 30 V DC, non-inductive
	LVS200	version with 1 relay	SPDT relay fail-safe: high or low, switch selectable relay 8 A at 250 V AC, non-inductive / relay 5 A at 30 V DC, non-inductive
		version with 2 relays	DPDT relay fail-safe: high or low, switch selectable relay 8 A at 250 V AC, non-inductive / relay 5 A at 30 V DC, non-inductive
		3-wire PNP	open collector: permanent load maximum 0.4 A, short circuit and overload protected; turn-on voltage: max. 50 V (reverse protection)
		mA output (build-up detection)	8/16 mA or 4 to 20 mA; resolution 4 to 20 mA, ±0.1 mA
Mechanical	Process Connection		
	LVS100	thread	R 1½" (BSPT); 1¼" NPT (Taper) ANSI B 1.20.1
		thread material	stainless steel 316 Ti (1.4581) or 304 (1.4301) for specific configurations
	LVS200	thread	1½” NPT (Taper), R 1½” (BSPT)
		thread material	stainless steel 304 (1.4301) or optional stainless steel 316 Ti (1.4571)/ 316L (1.4404)
		flanges	DN 100 PN6, DN 100 PN16, 2", 3", 4" ASME 150 lb flanges
		optional sliding bushing	with R 2" (BSPT) or NPT (Taper) thread
		Tri-clamp	2" (DN50) ISO 2852
	Tines	tine material (PTFE[1] coated tines are available upon special request. Contact your local Siemens representative for ordering information.)	stainless steel 316Ti (1.4571)/ 316L (1.4581)
	Enclosure	construction	epoxy-coated aluminum
		conduit entry	2 x M20x1.5, or 2 x ½” NPT
		ingress protection	Type 4X/NEMA 4X/IP66
	Weight	standard version, no extensions	2.0 kg (4.4 lb)
		solids/liquids, no extensions	1.9 kg (4.2 lb)

Environmental	location	indoor/outdoor
	altitude	max. 2000 m (6562 ft)
	ambient temperature	–40 to +60 °C (–40 to +140 °F)
	relative humidity	0 to 100% (suitable for outdoor: ingress protection: Type 4X/NEMA 4X/IP66)
	overvoltage category	II
	pollution degree	2
Process	Temperature	
	All approvals except CSA Class II, Group G:	–40 to +150 °C (–40 to +302 °F)
	CSA Class II, Group G:	–40 to +140 °C (–40 to +284 °F), CSA temperature code T3B
	For applications with process temperature greater than +80 °C (+176 °F), the maximum threaded bushing surface temperature must not exceed +80 °C (+176 °F)	
	Maximum enclosure surface temperature (Category 2D): +120 °C (+248 °F) (ATEX relevant)	
	Maximum extension surface temperature (Category 1D): +150 °C (+302 °F) (ATEX relevant)	
	Pressure	• 7ML5731 max 30 bar, gauge (435 psi, gauge) • 7ML5732 max 30 bar, gauge (435 psi, gauge) • 7ML5733 max 10 bar, gauge (145 psi, gauge) • 7ML5734 max 10 bar, gauge (145 psi, gauge) • 7ML5735 max 10 bar, gauge (145 psi, gauge)
Approvals	LVS100	CE
		ATEX II 1/2D
		IECEx t IIIC Da/Db
		CSA/FM Class II, III, Div. 1, Groups E, F, G
		C-TICK
	LVS200	FM/$_C$CSA$_{us}$ General Purpose
		CE
		CSA/FM Dust Ignition Proof
		ATEX II 1/2D
		IECEx t IIIC Da/Db
		CSA/FM IS Class I, II, III, Div. 1, Groups A to G,
		FM Class I, AEx ia IIC, CSA Class 1, Ex ia IIC, available only with 7 to 9 V DC power supply with NAMUR switch amplifier
		ATEX II 1G and 1/2G EEx ia IIC; ATEX II 1D and 1/2D, available only with 7 to 9 V DC power supply with NAMUR switch amplifier
		C-TICK

[1] Polytetrafluoroethylene

Note

SITRANS LVS200 can be installed with an optional temperature isolator extension. The isolator increases the distance of the electronics from the process surface, thus allowing for a higher ambient temperature. See “Temperature Isolator Option (LVS100/200) (Page 18)” for more information

Note

Pressure information for hazardous areas

The device construction allows over-pressure up to 30 bar. This pressure is allowed for test purposes. The ATEX approval applies to over-pressure between –0.2 and 0.1 bar in hazardous areas. For higher or lower pressures, the approval is not valid.

Dimension drawings

8

8.1 SITRANS LVS100

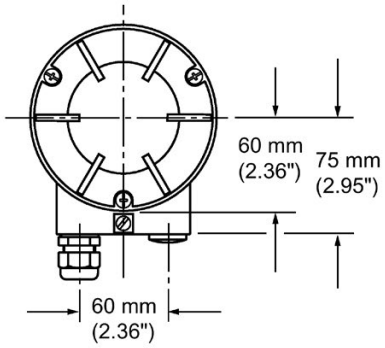

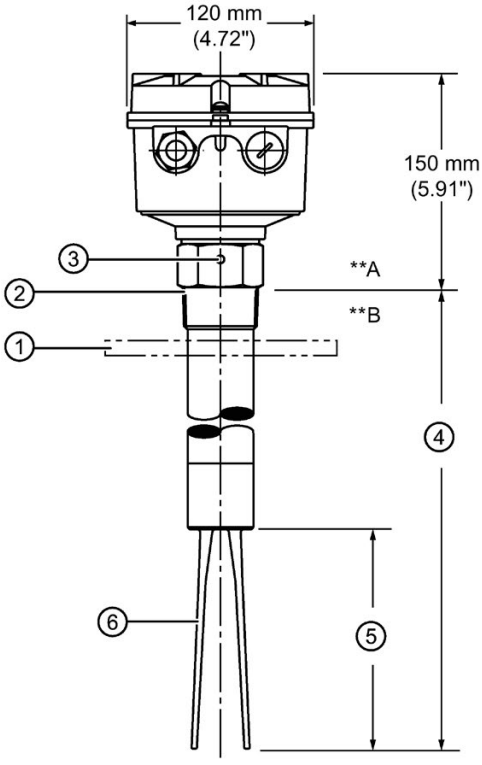

① Customer supplied process flange

② Threaded bushing [max. temp. +80°C(+176°F)]

③ Tine orientation marking

④ 170 to 4000 mm (6.69 to 157"): customer-specified rigid extension

⑤ 125 mm (4.92"): standard fork

⑥ Tine

8.2 Zone classification

**A	EPL (IEC-Ex)	Db
	Category (ATEX)	2D
	Zone	21
**B	EPL (IEC-Ex)	Da
	Category (ATEX)	1D
	Zone	20

8.3 SITRANS LVS200

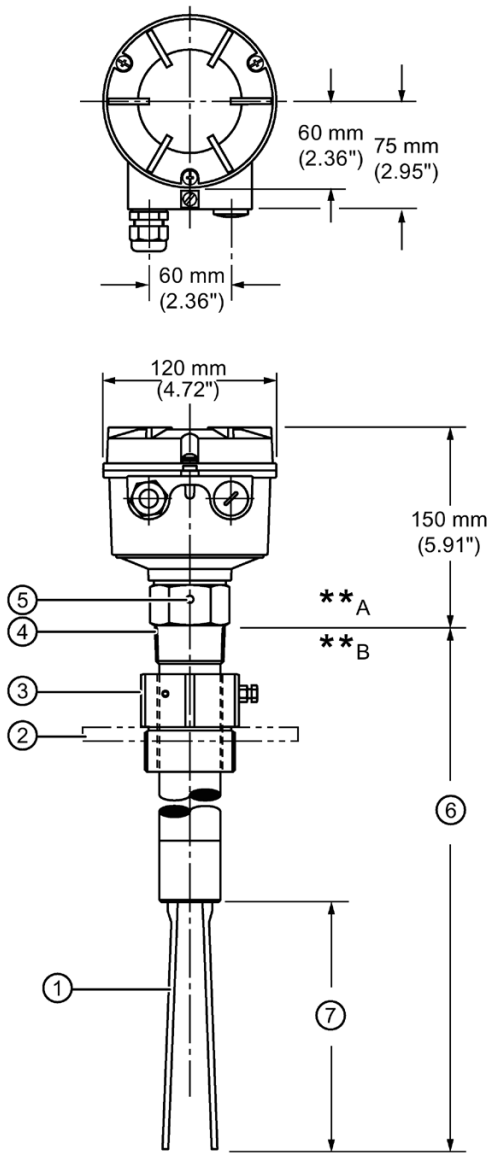

① Tine
② Customer supplied process flange
③ Optional sliding bushing*
④ Threaded bushing [max. temp. +80°C (+176°F)]
⑤ Tine orientation marking
⑥ Compact solids/liquids interface model: 165 mm (6.5"):
Compact standard version: 230 mm (9.0")
Customer-specified rigid extension: 300 to 4000 mm (11.81 to 157")
⑦ Standard fork: 170 mm (6.69")
Low density fork: 195 mm (7.68")
Liquid/solid (short) fork: 100 mm (3.94")

Note

The clamping screws of the sliding bushing must be tightened to 10 Nm.

8.4 Zone classification

		Universal voltage Relay SPDT Universal Voltage Relay DPDT 3-wire PNP 2 wire without contact 8/16 mA or 4-20 mA (Non-intrinsically safe)		NAMUR IEC 60945-5-6 (Intrinsically Safe) 8/16 mA or 4-20 mA (Intrinsically Safe)			
**A	EPL (IECEx)	Da	Db	Da	Db	Ga	Gb
	Category (ATEX)	1D	2D	1D	2D	1G	2G
	Zone	20	21	20	21	0	1
**B	EPL (IECEx)	Da	Da	Da	Da	Ga	Ga
	Category (ATEX)	1D	1D	1D	1D	1G	1G
	Zone	20	20	20	20	0	0

8.5 SITRANS LVS200 Forks

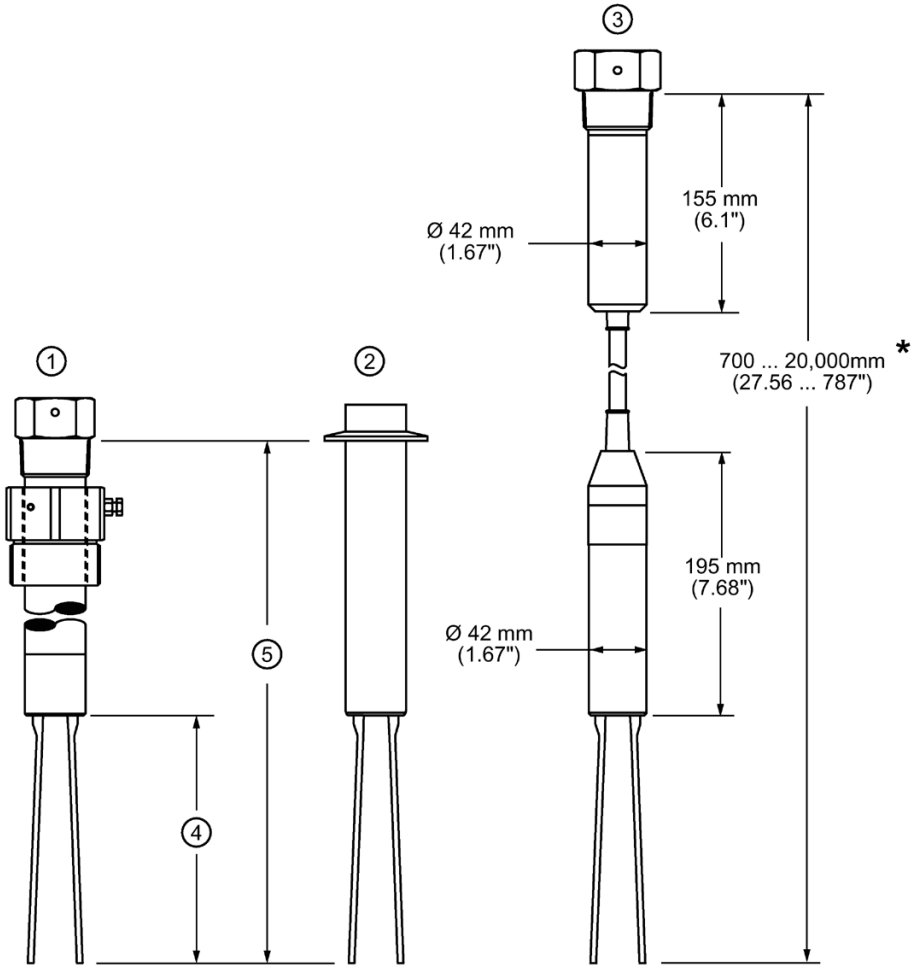

① Standard version
② TriClamp version
③ Cable version
④ Standard fork: 170 mm (6.69")
Low density fork: 195 mm (7.68")
Liquid/solid (short) fork: 100 mm (3.94")
⑤ Compact solids/liquids interface model: 165 mm (6.5")
Compact standard version: 230 mm (9.0")
Customer-specified rigid extension: 300 to 4000 mm (11.81 to 157")

Note

Cable version with Liquids/solids interface model option length to 7000 mm (275.59")
Cable version with NAMUR electronics length to 10 000 mm (393.7")

Certificates and support

A

A.1 Technical support

Technical support

If this documentation does not provide complete answers to any technical questions you may have, contact Technical Support at:

- Instructions and manuals (http://www.siemens.com/processinstrumentation/documentation)
- More information about our Technical Support is available at Technical Support (http://www.siemens.com/automation/csi/service)

Internet Service & Support

In addition to our documentation, Siemens provides a comprehensive support solution at:

- Partner (http://www.automation.siemens.com/partner)

Personal contact

If you have additional questions about the device, please contact your Siemens personal contact at:

- Support request (http://www.siemens.com/automation/support-request)

To find the personal contact for your product, go to "All Products and Branches" and select "Products & Services > Industrial Automation > Process Instrumentation".

Documentation

You can find documentation on various products and systems at:

- Services & Support (http://www.siemens.com/automation/service&support)

A.2 Certificates

You can find certificates on the Internet at Industry Online Support (https://support.industry.siemens.com/cs/products?dtp=Certificate&mfn=ps&pnid=17456&lc=en-WW) or on an included DVD.

Index

C

Certificates, 47
Compact Operating Instructions, 47
Customer Support, (Refer to Technical support)

D

Documentation, 47

H

Hotline, (Refer to Support request)

I

Instructions and manuals, 47

M

Manuals, 47

O

Operating Instructions, 47

S

Service, 47
Service & Support, 47
    Internet, 47
Support, 47
Support request, 47

T

Technical data, 38
Technical support, 47
    Partner, 47
    Personal contact, 47

For more information

Level measurement:
www.siemens.com/level

Weighing and batching systems:
www.siemens.com/weighing

Siemens AG
Process Industries and Drives
Process Automation
76181 Karlsruhe
Germany

© Siemens AG 2019
Subject to change without prior notice
Printed in Canada
A5E44839609-AA

A 5 E 4 4 8 3 9 6 0 9