SIEMENS

SITRANS L

Radar transmitters
SITRANS LR560 with Profibus PA

Operating Instructions

Introduction 1
Safety notes 2
Description 3
Installing/mounting 4
Connecting 5
Commissioning 6
Operating 7
Parameter Reference 8
Service and maintenance 9
Diagnosing and troubleshooting 10
Technical data 11
Dimension drawings 12
Technical reference A
PROFIBUS PA profile structure B
Communications via PROFIBUS PA C
Certificates and Support D
HMI menu structure E
List of abbreviations F

07/2019
A5E34648471-AF

Legal information

Warning notice system

This manual contains notices you have to observe in order to ensure your personal safety, as well as to prevent damage to property. The notices referring to your personal safety are highlighted in the manual by a safety alert symbol, notices referring only to property damage have no safety alert symbol. These notices shown below are graded according to the degree of danger.

⚠ DANGER
indicates that death or severe personal injury **will** result if proper precautions are not taken.

⚠ WARNING
indicates that death or severe personal injury **may** result if proper precautions are not taken.

⚠ CAUTION
indicates that minor personal injury can result if proper precautions are not taken.

NOTICE
indicates that property damage can result if proper precautions are not taken.

If more than one degree of danger is present, the warning notice representing the highest degree of danger will be used. A notice warning of injury to persons with a safety alert symbol may also include a warning relating to property damage.

Qualified Personnel

The product/system described in this documentation may be operated only by **personnel qualified** for the specific task in accordance with the relevant documentation, in particular its warning notices and safety instructions. Qualified personnel are those who, based on their training and experience, are capable of identifying risks and avoiding potential hazards when working with these products/systems.

Proper use of Siemens products

Note the following:

⚠ WARNING
Siemens products may only be used for the applications described in the catalog and in the relevant technical documentation. If products and components from other manufacturers are used, these must be recommended or approved by Siemens. Proper transport, storage, installation, assembly, commissioning, operation and maintenance are required to ensure that the products operate safely and without any problems. The permissible ambient conditions must be complied with. The information in the relevant documentation must be observed.

Trademarks

All names identified by ® are registered trademarks of Siemens AG. The remaining trademarks in this publication may be trademarks whose use by third parties for their own purposes could violate the rights of the owner.

Disclaimer of Liability

We have reviewed the contents of this publication to ensure consistency with the hardware and software described. Since variance cannot be precluded entirely, we cannot guarantee full consistency. However, the information in this publication is reviewed regularly and any necessary corrections are included in subsequent editions.

Siemens AG
Division Process Industries and Drives
Postfach 48 48
90026 NÜRNBERG
GERMANY

Document order number: A5E34648471
Ⓟ 10/2019 Subject to change

Copyright © Siemens AG 2019.
All rights reserved

Table of contents

1 Introduction 11

1.1 Purpose of this documentation 11

1.2 Security information 11

1.3 Checking the consignment 12

1.4 Transportation and storage 12

1.5 Notes on warranty 12

1.6 Firmware revision history 13

2 Safety notes 14

2.1 Preconditions for use 14
2.1.1 Safety marking symbols 14
2.1.2 Improper device modifications 14
2.1.3 Laws and directives 15
2.1.4 Conformity with European directives 15
2.1.5 Radio Equipment Directive (RED) compliance (Europe) 15
2.1.6 Federal Communications Commission (FCC) conformity (US) 16
2.1.7 Industry Canada 17

2.2 Use in hazardous areas 17

2.3 Requirements for special applications 18

3 Description 19

3.1 SITRANS LR560 overview 19

4 Installing/mounting 20

4.1 Basic safety instructions 20
4.1.1 Installation location requirements 21
4.1.2 Proper mounting 22
4.1.2.1 Incorrect mounting 22

4.2 Installation instructions 23
4.2.1 Pressure equipment directive (PED, 2014/68/EU) 23
4.2.2 Nozzle location 24
4.2.3 Environment 24
4.2.4 Sunshield 25
4.2.5 Aimer adjustment 26
4.2.6 Air purging system 27
4.2.7 Removable display 28
4.2.8 Basic PLC configuration with PROFIBUS PA 28

4.3 Disassembly 29

5 Connecting 30

5.1 Basic safety information 30

5.1.1 Incorrect connection to power source ... 31
5.2 Connecting SITRANS LR560 ... 32
5.3 Basic PLC configuration ... 33
5.4 PLC configuration for hazardous areas ... 34
5.5 Nameplates for hazardous area installations ... 34
5.5.1 PROFIBUS PA Non-Sparking/Energy Limited wiring (Europe) and Dust Ignition Proof wiring (Europe/International) ... 35
5.5.2 FM/CSA Class 1, Div 2 installation and connection drawing ... 35
5.6 Instructions specific to hazardous area installations ... 35
5.6.1 (Reference European ATEX Directive 2014/34/EU, Annex II, 1.0.6) ... 35
5.6.2 Special conditions for safe use ... 36
6 Commissioning ... 37
6.1 Basic safety notes ... 37
6.2 Activating the LR560 note ... 39
6.3 Activating the radar device ... 39
6.4 The LCD display ... 39
6.5 Device Address ... 41
6.6 Commissioning via local display ... 41
6.6.1 Quick Start Wizard via the local display push buttons ... 42
6.7 Commissioning via handheld programmer ... 43
6.7.1 Handheld programmer (Part No. 7ML1930-1BK) ... 43
6.7.2 Lithium batteries ... 43
6.7.3 Key functions in measurement mode ... 44
6.7.4 Programming ... 44
6.7.4.1 Parameter menus ... 45
6.7.4.2 Quick Start Wizard via the handheld programmer ... 48
6.7.4.3 Requesting an Echo Profile ... 51
6.8 Application example ... 52
6.8.1 Level application example ... 52
7 Operating ... 53
7.1 Remote operation ... 53
7.1.1 Operating via SIMATIC PDM ... 53
7.1.1.1 PDM function overview ... 53
7.1.1.2 SIMATIC PDM Version ... 53
7.1.1.3 Updating the Electronic Device Description (EDD) ... 53
7.1.1.4 Configuring a new device ... 54
7.1.1.5 Quick Start wizard via SIMATIC PDM ... 55
7.1.1.6 Changing parameter settings using SIMATIC PDM ... 60
7.1.2 Operating via FDT (field device tool) ... 74
8 Parameter Reference ... 76
8.1 QUICK START (1.) ... 76
8.1.1 QUICK START WIZARD (1.1.) ... 77
8.1.2 AFES WIZARD (1.2.) ... 77

8.1.3 COPY PARAMETERS TO DISPLAY (1.3.) 79
8.1.4 COPY PARAMETERS FROM DISPLAY (1.4.) 79
8.1.5 COPY FIRMWARE TO DISPLAY (1.5.) 80
8.1.6 COPY FIRMWARE FROM DISPLAY (1.6.) 80

8.2 SETUP (2.) 81
8.2.1 IDENTIFICATION (2.1) 81
8.2.1.1 TAG (2.1.1.) 81
8.2.1.2 DESCRIPTOR (2.1.2.) 81
8.2.1.3 MESSAGE (2.1.3.) 81
8.2.1.4 INSTALLATION DATE (2.1.4.) 81
8.2.2 DEVICE (2.2.) 81
8.2.2.1 HARDWARE REVISION (2.2.1.) 81
8.2.2.2 FIRMWARE REVISION (2.2.2.) 81
8.2.2.3 LOADER REVISION (2.2.3.) 82
8.2.2.4 MENU TIMEOUT (2.2.4.) 82
8.2.2.5 MANUFACTURE DATE (2.2.5.) 82
8.2.3 SENSOR (2.3.) 82
8.2.3.1 UNIT (2.3.1.) 82
8.2.3.2 LEVEL UNIT (2.3.2.) 83
8.2.3.3 LOE TIMER (2.3.3.) 83
8.2.3.4 TEMP UNITS (2.3.4.) 83
8.2.3.5 CALIBRATION (2.3.5.) 84
8.2.3.6 RATE (2.3.6.) 85
8.2.4 SIGNAL PROCESSING (2.4.) 87
8.2.4.1 NEAR RANGE (2.4.1.) 87
8.2.4.2 FAR RANGE (2.4.2.) 87
8.2.4.3 MINIMUM SENSOR VALUE (2.4.3.) 87
8.2.4.4 MAXIMUM SENSOR VALUE (2.4.4.) 88
8.2.4.5 ECHO SELECT (2.4.5.) 88
8.2.4.6 SAMPLING (2.4.6.) 90
8.2.4.7 ECHO LOCK (2.4.6.1.) 90
8.2.4.8 UP SAMPLING (2.4.6.2.) 90
8.2.4.9 DOWN SAMPLING (2.4.6.3.) 90
8.2.4.10 ECHO LOCK WINDOW (2.4.6.4.) 91
8.2.4.11 ECHO QUALITY (2.4.7.) 91
8.2.4.12 TVT SETUP (2.4.8.) 92
8.2.4.13 TVT SHAPER (2.4.9.) 93
8.2.5 AIFB1 94
8.2.5.1 STATIC REVISION NO. (2.5.1.) 94
8.2.5.2 MODE (2.5.2.) 94
8.2.5.3 CHANNEL (2.5.3.) 94
8.2.5.4 LABEL (2.5.4.) 95
8.2.5.5 INPUT SCALING (2.5.5.) 95
8.2.5.6 OUTPUT SCALING (2.5.6.) 96
8.2.5.7 ALARMS AND WARNINGS (2.5.7.) 96
8.2.5.8 DISPLAY (2.5.8.) 97
8.2.5.9 FAIL-SAFE (2.5.9.) 98
8.2.6 AIFB2 99
8.2.7 MEASURED VALUES (2.7.) 99
8.2.7.1 MEASURED VALUES (2.7.) 99
8.2.7.2 MAIN OUTPUT (2.7.1.) 99
8.2.7.3 OUTPUT NO LINEARIZATION (2.7.2.) 99

8.2.7.4 OUTPUT NO OFFSETS (2.7.3.) ... 99
8.2.8 FILTERING (2.8.) ... 100
8.2.8.1 NARROW ECHO FILTER (2.8.1.) ... 100
8.2.8.2 REFORM ECHO (2.8.2.) ... 100
8.2.8.3 AVERAGE AMOUNT (2.8.3.) ... 100

8.3 DIAGNOSTICS (3.) ... 101
8.3.1 ECHO PROFILE (3.1.) ... 101
8.3.2 FAULT RESET (3.2.) ... 102
8.3.3 TREND (3.3.) ... 102
8.3.4 MINIMUM VALUE (3.4.1.) ... 103
8.3.5 MAXIMUM VALUE (3.4.2.) ... 103
8.3.6 INTERNAL TEMPERATURE (3.4.3.) ... 103
8.3.7 CONDENSED STATUS (3.5.) ... 103
8.3.7.1 ENABLE (3.5.1.) ... 103
8.3.7.2 FEATURE SUPPORTED (3.5.2.) ... 104
8.3.7.3 FEATURE ENABLED (3.5.3.) ... 104
8.3.8 EVENT INDEX (3.6.1.) ... 104
8.3.9 EVENT STATUS (3.6.2.) ... 105
8.3.10 EVENT DIAGNOSIS (3.6.3.) ... 106
8.3.11 PEAK VALUES (3.7.) ... 106
8.3.12 MINIMUM MEASURED VALUE (3.7.1.) ... 107
8.3.13 MAXIMUM MEASURED VALUE (3.7.2.) ... 107

8.4 SERVICE (4.) ... 107
8.4.1 DEMO MODE (4.1.) ... 107
8.4.2 MASTER RESET (4.2.) ... 108
8.4.3 POWERED HOURS (4.3.) ... 108
8.4.4 POWERON RESETS (4.4.) ... 109
8.4.5 LCD BACKLIGHT (4.5.) ... 109
8.4.6 LCD CONTRAST (4.6.) ... 109
8.4.7 REMAINING DEVICE LIFETIME (4.7.) ... 110
8.4.7.1 LIFETIME EXPECTED (4.7.1.) ... 110
8.4.7.2 TIME IN OPERATION (4.7.2.) ... 110
8.4.7.3 REMAINING LIFETIME (4.7.3.) ... 111
8.4.7.4 REMINDER ACTIVATION (4.7.4.) ... 111
8.4.7.5 REMINDER 1 (REQUIRED) (4.7.5.) ... 111
8.4.7.6 REMINDER 2 (DEMANDED) (4.7.6.) ... 111
8.4.7.7 MAINTENANCE STATUS (4.7.7.) ... 111
8.4.7.8 ACKNOWLEDGE STATUS (4.7.8.) ... 111
8.4.7.9 ACKNOWLEDGE (4.7.9.) ... 112
8.4.8 REMAINING SENSOR LIFETIME (4.8.) ... 112
8.4.8.1 REMAINING SENSOR LIFE (4.8.) ... 112
8.4.8.2 LIFETIME EXPECTED (4.8.1.) ... 113
8.4.8.3 TIME IN OPERATION (4.8.2.) ... 113
8.4.8.4 REMAINING LIFETIME (4.8.3.) ... 113
8.4.8.5 REMINDER ACTIVATION (4.8.4.) ... 113
8.4.8.6 REMINDER 1 (REQUIRED) (4.8.5.) ... 113
8.4.8.7 REMINDER 2 (DEMANDED) (4.8.6.) ... 114
8.4.8.8 MAINTENANCE STATUS (4.8.7.) ... 114
8.4.8.9 ACKNOWLEDGE STATUS (4.8.8.) ... 114
8.4.8.10 ACKNOWLEDGE (4.8.9.) ... 114
8.4.9 SERVICE SCHEDULE (4.9.) ... 115

8.4.9.1 SERVICE SCHEDULE (4.9.) 115
8.4.9.2 SERVICE INTERVAL (4.9.1.) 115
8.4.9.3 TIME SINCE LAST SERVICE (4.9.2.) 116
8.4.9.4 TIME UNTIL NEXT SERVICE (4.9.3.) 116
8.4.9.5 REMINDER ACTIVATION (4.9.4.) 116
8.4.9.6 REMINDER 1 (REQUIRED) (4.9.5.) 116
8.4.9.7 REMINDER 2 (DEMANDED) (4.9.6.) 117
8.4.9.8 MAINTENANCE STATUS (4.9.7.) 117
8.4.9.9 ACKNOWLEDGE STATUS (4.9.8.) 117
8.4.9.10 ACKNOWLEDGE (4.9.9.) 117
8.4.10 CALIBRATION SCHEDULE (4.10.) 118
8.4.10.1 CALIBRATION SCHEDULE (4.10.) 118
8.4.10.2 CALIBRATION INTERVAL (4.10.1.) 118
8.4.10.3 TIME SINCE LAST CALIBRATION (4.10.2.) 119
8.4.10.4 TIME UNTIL NEXT CALIBRATION (4.10.3.) 119
8.4.10.5 REMINDER ACTIVATION (4.10.4.) 119
8.4.10.6 REMINDER 1 (REQUIRED) (4.10.5.) 119
8.4.10.7 REMINDER 2 (DEMANDED) (4.10.6.) 120
8.4.10.8 MAINTENANCE STATUS (4.10.7.) 120
8.4.10.9 ACKNOWLEDGE STATUS (4.10.8) 120
8.4.10.10 ACKNOWLEDGE (4.10.9.) 120
8.4.11 STORED SOFTWARE VERSION (4.11.) 120

8.5 COMMUNICATION (5.) 121
8.5.1 DEVICE ADDRESS (5.1.) 121
8.5.2 PROFIBUS IDENTIFICATION (5.2.) 121

8.6 SECURITY (6.) 122
8.6.1 REMOTE LOCKOUT (6.1.1.) 122
8.6.2 WRITE PROTECT (6.2.1.) 122

8.7 LANGUAGE (7.) 122
8.7.1 LANGUAGE (7.) 122

9 Service and maintenance 123

9.1 Basic safety notes 123
9.1.1 Maintenance 123

9.2 Cleaning 124

9.3 Maintenance and repair work 124

9.4 Return procedure 126

9.5 Disposal 127

10 Diagnosing and troubleshooting 128

10.1 Device status icons 128

10.2 General fault codes 129

10.3 Operation troubleshooting 132

10.4 Communication troubleshooting 133

11 Technical data 134

11.1 POWER 134

11.2 Performance ... 134
11.3 Construction ... 135
11.4 Operating conditions ... 135
11.5 Process ... 136
11.6 Communication: Profibus PA ... 136
11.7 Approvals data ... 137
11.8 Programmer (infrared keypad) ... 138

12 Dimension drawings ... 139

12.1 SITRANS LR560 with stainless steel universal flat-faced flange ... 139
12.2 SITRANS LR560 with 3" aimer flange ... 140
12.3 SITRANS LR560 with 4" and 6" aimer flange ... 141
12.4 SITRANS LR560 with stamped flange ... 142
12.5 Universal slotted flange ... 143
12.6 Stamped flange ... 145
12.7 Process connection label (pressure rated versions) ... 146

A Technical reference ... 147

A.1 Technical reference ... 147
A.2 Principles of operation ... 147
A.3 Process variables ... 147
A.4 Echo processing ... 148
A.4.1 Process Intelligence ... 148
A.4.2 Echo selection ... 148
A.4.3 CLEF RANGE (2.4.5.4.) ... 151
A.4.4 ECHO THRESHOLD (2.4.5.3.) ... 151
A.4.5 ECHO LOCK (2.4.6.1.) ... 151
A.4.6 AUTO FALSE ECHO SUPPRESSION (2.4.8.1.) ... 151
A.4.7 Measurement range ... 153
A.5 Measurement response ... 154
A.6 Damping ... 154
A.7 Loss of Echo (LOE) ... 155
A.7.1 Loss of Echo (LOE) ... 155
A.7.2 Fail-safe Behavior ... 155
A.7.3 Mode ... 155
A.7.4 Value ... 156
A.8 Loop power ... 156
A.8.1 Temperature De-Rating ... 156

B PROFIBUS PA profile structure ... 158

B.1 PROFIBUS Level Device Design ... 158
B.2 Block Model ... 158

B.3 Transducer Block function groups 159
B.4 How the transducer block works: 159
B.5 Analog Input Function Blocks 1 and 2 160
B.6 Output conversion 160
B.7 Device/input simulation 161
B.8 Analog Input Function Block function groups (simulation, mode and status) 161
B.9 How an Analog Input Function Block works 162
B.10 AIFB function groups 162
C Communications via PROFIBUS PA 163
C.1 Device configuration tool 163
C.2 SIMATIC PDM 163
C.3 Electronic Device Description 163
C.4 Network configuration 163
C.5 The GSD file 163
C.6 Bus termination 164
C.7 Power demands 164
C.8 PROFIBUS address 164
C.9 Operating as a profile device 165
C.10 Configuring a new device 165
C.11 Configuring PROFIBUS PA with an S7-300/ 400 PLC 165
C.12 Cyclic versus acyclic data 165
C.13 Cyclic data 166
C.14 Status byte 166
C.15 Condensed status 167
C.16 Diagnostics 169
C.17 Diagnosis reply (available cyclically) 169
C.18 Diagnosis object (available cyclically or acyclically) 170
C.19 Extended mode diagnosis 170
C.20 Condensed mode diagnosis 171
C.21 Acyclic extended diagnostics (general fault codes) 172
C.22 Acyclic data 174
D Certificates and Support 175
D.1 Technical support 175
D.2 QR code label 175
D.3 Certificates 176

E HMI menu structure 177

E.1 HMI menu 177

F List of abbreviations 182

F.1 List of abbreviations 182

Glossary 183

Index 188

Introduction 1

Note

This manual applies to the SITRANS LR560 (PROFIBUS PA) version only.

1.1 Purpose of this documentation

These instructions contain all information required to commission and use the device. Read the instructions carefully prior to installation and commissioning. In order to use the device correctly, first review its principle of operation.

The instructions are aimed at persons mechanically installing the device, connecting it electronically, configuring the parameters and commissioning it, as well as service and maintenance engineers.

1.2 Security information

Siemens provides products and solutions with industrial security functions that support the secure operation of plants, systems, machines and networks.

In order to protect plants, systems, machines and networks against cyber threats, it is necessary to implement – and continuously maintain – a holistic, state-of-the-art industrial security concept. Siemens' products and solutions constitute one element of such a concept.

Customers are responsible for preventing unauthorized access to their plants, systems, machines and networks. Such systems, machines and components should only be connected to an enterprise network or the internet if and to the extent such a connection is necessary and only when appropriate security measures (e.g. firewalls and/or network segmentation) are in place.

For additional information on industrial security measures that may be implemented, please visit
https://www.siemens.com/industrialsecurity.

Siemens' products and solutions undergo continuous development to make them more secure. Siemens strongly recommends that product updates are applied as soon as they are available and that the latest product versions are used. Use of product versions that are no longer supported, and failure to apply the latest updates may increase customer's exposure to cyber threats.

To stay informed about product updates, subscribe to the Siemens Industrial Security RSS Feed under
https://www.siemens.com/industrialsecurity.

1.3 Checking the consignment

1. Check the packaging and the delivered items for visible damages.
2. Report any claims for damages immediately to the shipping company.
3. Retain damaged parts for clarification.
4. Check the scope of delivery by comparing your order to the shipping documents for correctness and completeness.

⚠ WARNING
Using a damaged or incomplete device Risk of explosion in hazardous areas. • Do not use damaged or incomplete devices.

1.4 Transportation and storage

To guarantee sufficient protection during transport and storage, observe the following:

- Keep the original packaging for subsequent transportation.
- Devices/replacement parts should be returned in their original packaging.
- If the original packaging is no longer available, ensure that all shipments are properly packaged to provide sufficient protection during transport. Siemens cannot assume liability for any costs associated with transportation damages.

NOTICE
Insufficient protection during storage The packaging only provides limited protection against moisture and infiltration. • Provide additional packaging as necessary.

Special conditions for storage and transportation of the device are listed in Technical data (Page 134).

1.5 Notes on warranty

The contents of this manual shall not become part of or modify any prior or existing agreement, commitment or legal relationship. The sales contract contains all obligations on the part of Siemens as well as the complete and solely applicable warranty conditions. Any statements regarding device versions described in the manual do not create new warranties or modify the existing warranty.

The content reflects the technical status at the time of publishing. Siemens reserves the right to make technical changes in the course of further development.

1.6 Firmware revision history

Firmware version	Hardware version	EDD version	Date (dd/mm/yyyy)	Changes
1.00.00	1.00.00	1.00.00	May 2010	Initial release
1.00.02-06	1.xx.xx	1.00.02-06	Nov 2011	Maintenance release
1.00.01-14	1.xx.xx	1.00.02-10	March 2012	Maintenance release
1.00.02-14	1.xx.xx	1.00.03-01	April 2015	Maintenance release
1.00.04-06	2.xx.xx	1.00.03-01	Dec 2018	Maintenance release

Note

Damage to the electronic module

On devices with hardware version 2.00.00 or subsequent versions, do not downgrade the firmware to any versions before 1.00.04-06. The electronic module will be damaged. New firmware versions are back compatible with older versions of the hardware; however, devices with new hardware versions are not compatible with older firmware versions.

Safety notes 2

2.1 Preconditions for use

This device left the factory in good working condition. In order to maintain this status and to ensure safe operation of the device, observe these instructions and all the specifications relevant to safety.

Observe the information and symbols on the device. Do not remove any information or symbols from the device. Always keep the information and symbols in a completely legible state.

2.1.1 Safety marking symbols

In manual	On product	Description
⚠	⚠ (Label on product: yellow back-ground.)	WARNING: refer to accompanying documents (manual) for details.

2.1.2 Improper device modifications

⚠ WARNING

Improper device modifications

Risk to personnel, system and environment can result from modifications to the device, particularly in hazardous areas.

- Only carry out modifications that are described in the instructions for the device. Failure to observe this requirement cancels the manufacturer's warranty and the product approvals.

2.1.3 Laws and directives

Observe the safety rules, provisions and laws applicable in your country during connection, assembly and operation. These include, for example:

- National Electrical Code (NEC - NFPA 70) (USA)
- Canadian Electrical Code (CEC) (Canada)

Further provisions for hazardous area applications are for example:

- IEC 60079-14 (international)
- EN 60079-14 (EU)

2.1.4 Conformity with European directives

The CE marking on the device symbolizes the conformity with the following European directives:

Electromagnetic compatibility EMC 2014/30/EU	Directive of the European Parliament and of the Council on the harmonisation of the laws of the Member States relating to electromagnetic compatibility
Low voltage directive LVD 2014/35/EU	Directive of the European Parliament and of the Council on the harmonisation of the laws of the Member States relating to the making available on the market of electrical equipment designed for use within certain voltage limits
Atmosphère explosible ATEX 2014/34/EU	Directive of the European Parliament and the Council on the harmonisation of the laws of the Member States relating to equipment and protective systems intended for use in potentially explosive atmospheres
Pressure equipment directive PED 2014/68/EU	Directive of the European Parliament and of the Council on the harmonisation of the laws of the Member States relating to the making available on the market of pressure equipment
RED 2014/53/EU	Directive of the European Parliament and of the Council on the harmonisation of the laws of the Member States relating to the making available on the market of radio equipment and repealing Directive 1999/5/EC

The applicable directives can be found in the EC conformity declaration of the specific device.

2.1.5 Radio Equipment Directive (RED) compliance (Europe)

Hereby, Siemens declares that the SITRANS LR560 is in compliance with the essential requirements and other relevant provisions of Directive 2014/53/EU.

The LR560 complies with EN 302 372 for use in closed storage vessels, when installed according to the installation requirements of EN 302 372, and may be used in all EU countries.

For the receiver test that covers the influence of an interferer signal to the device, the performance criterion has at least the following level of performance according to ETSI TS 103 361 [6]:

- Performance criterion: measurement value variation Δd over time during a distance measurement
- Level of performance: Δd ≤ ±50 mm

The LR560 complies with ETSI EN 302 729 for use outside of closed tanks in most EU countries. (For a list of exceptions, see the LR560 Declaration to EN 302 729, which can be accessed online here (www.siemens.com/LR560).) For open air installations, the following conditions must be observed:

- Installation and maintenance is performed by suitably qualified and trained personnel.
- The LR560 shall be installed only in a permanent fixed position pointing downwards. Its location shall comply with the following two restrictions:
  - It shall be installed with a minimum separation distance of 4 km from radio astronomy sites listed here (http://www.craf.eu/radio-observatories-in-europe/) unless special authorization has been provided by the responsible national regulatory authority.
  - If it is installed at a location between 4 and 40 km from any radio astronomy site listed here (http://www.craf.eu/radio-observatories-in-europe/), the LR560 shall be installed at a height not exceeding 15m from the ground.

2.1.6 Federal Communications Commission (FCC) conformity (US)

US Installations only: Federal Communications Commission (FCC) rules

- This device has been tested and found to comply with the limits for a Class B digital device, pursuant to Part 15 of the FCC Rules. These limits are designed to provide reasonable protection against harmful interference when the equipment is operated in a commercial environment.
- This device has also been tested and found to comply with the limits §15.256, Subpart C-Intentional radiators, pursuant to Part 15 of the FCC Rules. These limits are designed to provide reasonable protection against harmful interference when the equipment is operated in a commercial environment.
- This device generates, uses, and can radiate radio frequency energy and, if not installed and used in accordance with the instruction manual, may cause harmful interference to radio communications, in which case the user will be required to correct the interference at his/her own expense.
- This device may be used to measure levels in open air environments or outside enclosed tanks, subject to the following conditions:
  - Devices shall be installed and maintained to ensure a vertically downward orientation of the transmit antenna's main beam.
  - Devices shall be installed only at fixed locations. Devices shall not operate while being moved or while inside a moving container.
  - Hand-held applications and residential use are prohibited.

2.1.7 Industry Canada

The SITRANS LR560 complies with Industry Canada standard RSS211 (March 2015).

1. The installation of the SITRANS LR560 shall be done by trained installers, in strict compliance with the manufacturer's instructions.
2. The use of this device is on a “no-interference, no-protection” basis. That is, the user shall accept operations of high-powered radar in the same frequency band which may interfere with or damage this device. However, devices found to interfere with primary licensing operations will be required to be removed at the user’s expense.
3. The installer/user of this device shall ensure that it is at least 10 km from the Penticton radio astronomy station (British Columbia latitude: 49° 19' 12" N, longitude: 119° 37'12" W). For devices not meeting this 10 km separation (e.g. the Okanagan Valley, British Columbia) the installer/ user must coordinate with and obtain the written concurrence of the Director of the Penticton radio astronomy station before the equipment can be installed or operated. The Director of the DRAO may be contacted at 250-497-2300 or at NRC.DRAO-OFR.CNRC@nrc-cnrc.gc.ca. (Alternatively, the Manager, Regulatory Standards, Industry Canada, may be contacted.)

2.2 Use in hazardous areas

Qualified personnel for hazardous area applications

Persons who install, connect, commission, operate, and service the device in a hazardous area must have the following specific qualifications:

- They are authorized, trained or instructed in operating and maintaining devices and systems according to the safety regulations for electrical circuits, high pressures, aggressive, and hazardous media.
- They are authorized, trained, or instructed in carrying out work on electrical circuits for hazardous systems.
- They are trained or instructed in maintenance and use of appropriate safety equipment according to the pertinent safety regulations.

⚠ WARNING

Use in hazardous area

Risk of explosion.

- Only use equipment that is approved for use in the intended hazardous area and labeled accordingly.
- Do not use devices that have been operated outside the conditions specified for hazardous areas. If you have used the device outside the conditions for hazardous areas, make all Ex markings unrecognizable on the nameplate.

2.3 Requirements for special applications

Due to the large number of possible applications, each detail of the described device versions for each possible scenario during commissioning, operation, maintenance or operation in systems cannot be considered in the instructions. If you need additional information not covered by these instructions, contact your local Siemens office or company representative.

Note

Operation under special ambient conditions

We highly recommend that you contact your Siemens representative or our application department before you operate the device under special ambient conditions as can be encountered in nuclear power plants or when the device is used for research and development purposes.

Description

3

3.1 SITRANS LR560 overview

SITRANS LR560 is a 2-wire, 78 GHz FMCW radar level transmitter for continuous monitoring of solids and liquids in vessels to a range of 100 m (329 ft). The plug-and-play performance is ideal for all solids applications, including those with extreme dust and high temperatures to +200 °C (+392 °F). The device is an electronic circuit coupled to a lens antenna and flange for quick and easy positioning.

The main benefits of using 78 GHz over devices using lower frequency are:

- very narrow beam, so device is insensitive to mounting nozzle interference and vessel obstructions.
- short wavelength yields very good reflection properties on sloped solids, so aiming towards material angle of repose is usually not necessary.

The technology is very tolerant to buildup on the lens antenna, however an air purge inlet is provided for periodic cleaning if required.

Installing/mounting

4

4.1 Basic safety instructions

CAUTION

Hot surfaces resulting from hot process media

Risk of burns resulting from surface temperatures above 65 °C (149 °F).

- Take appropriate protective measures, for example contact protection.
- Make sure that protective measures do not cause the maximum permissible ambient temperature to be exceeded. Refer to the information in Technical data (Page 134).

Note

Material compatibility

Siemens can provide you with support concerning selection of sensor components wetted by process media. However, you are responsible for the selection of components. Siemens accepts no liability for faults or failures resulting from incompatible materials.

WARNING

Wetted parts unsuitable for the process media

Risk of injury or damage to device.

Hot, toxic and corrosive media could be released if the wetted parts are unsuitable for the process medium.

- Ensure that the material of the device parts wetted by the process medium is suitable for the medium. Refer to the information in Technical data (Page 134).

WARNING

Unsuitable connecting parts

Risk of injury or poisoning.

In case of improper mounting, hot, toxic, and corrosive process media could be released at the connections.

- Ensure that connecting parts (such as flange gaskets and bolts) are suitable for connection and process media.

WARNING

Exceeded maximum permissible operating pressure

Risk of injury or poisoning.

The maximum permissible operating pressure depends on the device version, pressure limit and temperature rating. The device can be damaged if the operating pressure is exceeded. Hot, toxic and corrosive process media could be released.

Ensure that maximum permissible operating pressure of the device is not exceeded. Refer to the information on the nameplate and/or in Technical data (Page 134).

WARNING

Pressure applications

Danger to personnel, system and environment can result from improper installation.

- Improper installation may result in loss of process pressure.

CAUTION

External stresses and loads

Damage to device by severe external stresses and loads (e.g. thermal expansion or pipe tension). Process media can be released.

- Prevent severe external stresses and loads from acting on the device.

4.1.1 Installation location requirements

NOTICE

Strong vibrations

Damage to device.

- In installations with strong vibrations, mount the transmitter in a low vibration environment.

NOTICE

Aggressive atmospheres

Damage to device through penetration of aggressive vapors.

- Ensure that the device is suitable for the application.

NOTICE

Direct sunlight

Device damage.

The device can overheat or materials become brittle due to UV exposure.

- Protect the device from direct sunlight.
- Make sure that the maximum permissible ambient temperature is not exceeded. Refer to the information in Technical data (Page 134).

WARNING

Insufficient air supply

The device may overheat if there is an insufficient supply of air.

- Install the device so that there is sufficient air supply in the room.
- Observe the maximum permissible ambient temperature. Refer to the information in the section Technical data (Page 134).

4.1.2 Proper mounting

4.1.2.1 Incorrect mounting

NOTICE

Incorrect mounting

The device can be damaged, destroyed, or its functionality impaired through improper mounting.

- Before installing ensure there is no visible damage to the device.
- Make sure that process connectors are clean, and suitable gaskets and glands are used.
- Mount the device using suitable tools.

WARNING

Loss of type of protection

Risk of explosion. Damage to device if the enclosure is open or not properly closed. The type of protection specified on the nameplate or in Approvals data (Page 137) is no longer guaranteed.

- Make sure that the device is securely closed.

4.2 Installation instructions

NOTICE
Damage to the flange If mating flange faces are not flat and free of distortion, then bolting the flanged process connection may produce a bending load on the device's flange. Cracking or other damage may occur. Use only 'full-face' flat gaskets surrounding the bolt holes. Ensure mating flange faces are flat and free of distortion.

4.2.1 Pressure equipment directive (PED, 2014/68/EU)

Note

Pressure-rated version only

- SITRANS LR560 units are pressure tested, meeting or exceeding the requirements of the ASME Boiler and Pressure Vessel Code and the European Pressure Equipment Directive.
- The serial numbers stamped in each process connection body provide a unique identification number indicating date of manufacture.
  Example: MMDDYY – XXX (where MM = month, DD = day, YY = year, and XXX= sequential unit produced)
- Further markings (space permitting) indicate flange configuration, size, pressure class, material, and material heat code.

SITRANS LR560 radar level measurement instrument falls below the limits of Article 4, sections 1&2 of the Pressure Equipment directive (2014/68/EU), as a category I pressure accessory. However, in accordance with PED, 2014/68/EU, Article 4, section 3, this equipment has been designed and manufactured in accordance with Sound Engineering Practice (SEP) (see EU Commission Guideline A-05).

4.2.2 Nozzle location

Note

False echoes

For details on avoiding false echoes, see AUTO ECHO SUPPRESSION (2.4.8.1.) (Page 92).

- Avoid central locations on tall, narrow vessels

Beam angle

- Beam angle is the width of the cone where the energy density is half of the peak energy density.
- The peak energy density is directly in front of and in line with the antenna.
- There is a signal transmitted outside the beam angle, therefore false targets may be detected.

Emission cone

- Keep emission cone free of interference from ladders, pipes, I-beams, or filling streams.

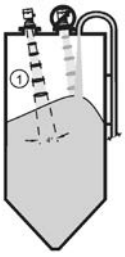

① Emission cone

4.2.3 Environment

- Provide easy access for viewing the display and programming via the local push buttons or the handheld programmer.
- Provide an environment suitable to the housing rating and materials of construction.

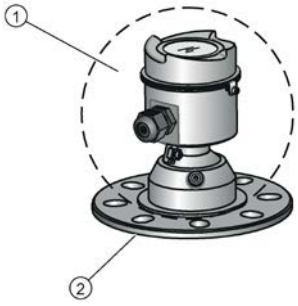

① ambient temperature: –40 °C to +80 °C (–40 °F to +176 °F)

② process temperature: –40 to +100 °C (–40 to +212 °F) or –40 to +200 °C (–40 to +392 °F) depending on the version

4.2.4 Sunshield

The LR560 display can be protected by an optional sun shield if the instrument will be mounted in direct sunlight.

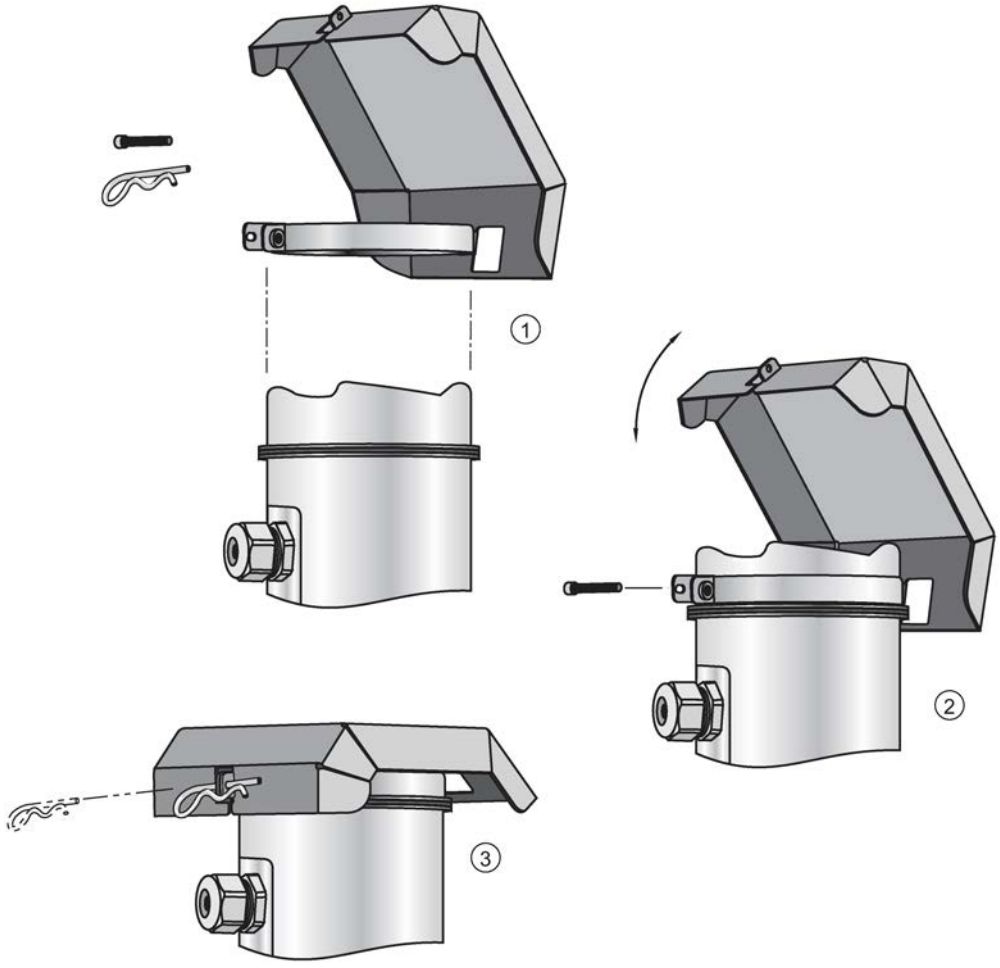

4.2.5 Aimer adjustment

Note

Measuring material in the cone

Aiming will assist in measuring material in the cone.

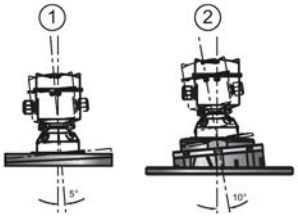

① 3" flange ② 4" and 6" flange

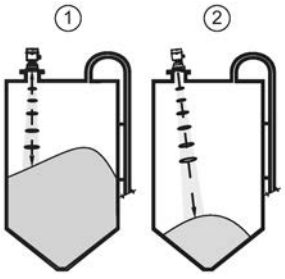

① Aiming is not required for signal optimization with 78 GHz frequency.

② Aiming will assist in measuring material in the cone.

1. For 4 and 6" Aimer: loosen the set screws in the locking ring.
   - Holding the electronics enclosure firmly, loosen the Aimer locking ring using the supplied C spanner, until the LR560 drops down slightly. The enclosure can then be turned freely.
2. Direct SITRANS LR560 so the antenna is pointed at an angle perpendicular to the material surface, if possible.
3. When the desired position is reached, re-tighten the locking ring using the C spanner, and tighten set screws.

4.2.6 Air purging system

For convenient cleaning, a purging inlet is provided above the antenna. The system provides a 1/8" inlet (female thread) above the antenna where clean, dry air passes to the face of the antenna lens to clean it. The customer will supply the purging air by a manual or automatic valve system.

Note

Air Purging considerations

- Purge duration, pressure, and interval, will vary with each application. It is the user's responsibility to determine the requirements depending on the application and cleaning required.
- Short duration bursts of high pressure provide more effective cleaning than continuous low pressure air.
- Some dust particles are highly abrasive and can cause wear on the lens face over time if continuous air purge is used, therefore short bursts are recommended.
- It is the customer's responsibility to ensure that any vacuum or pressure in the measured vessel is maintained, considering the hole that passes through the process connection and SITRANS LR560 antenna system.

Air Consumption (flow rate versus applied pressure)

Air pressure (psi)	Approx. inlet volume flow rate (SCFM)
20	5
40	10
50	15
80	20
100	25
110	30
Recommended 90 to 110 psi for effective cleaning[1)]	

[1)] Air pressure in vessel can affect purge operation.

Purge connection

- The purge connection is closed by the manufacturer, using a 1/8" plug.
- When the plug is removed to connect a purging system, the operator is responsible for ensuring that the purging circuit conforms to "Ex" requirements: for example, by fitting an NRV valve. Air pressure in vessel can affect purge operation.

① purge process connection with factory-installed 1/8" NPT plug

4.2.7 Removable display

The optional display can be rotated as required, to one of 4 positions, 90 degrees apart, see Connecting SITRANS LR560 (Page 32). It can also be used to transfer parameters from one device to another, see COPY PARAMETERS TO DISPLAY (1.3.) (Page 79).

Note

• PROFIBUS PA must be terminated at both extreme ends of the cable for it to work properly.

• Please refer to the PROFIBUS PA User and Installation Guidelines (order number 2.092), available from www.profibus.com, for information on installing PROFIBUSdevices.

• If a Weidmüller or other current limiting junction box is connected to this device, please ensure that the current limit is set to 40 mA or higher.

4.2.8 Basic PLC configuration with PROFIBUS PA

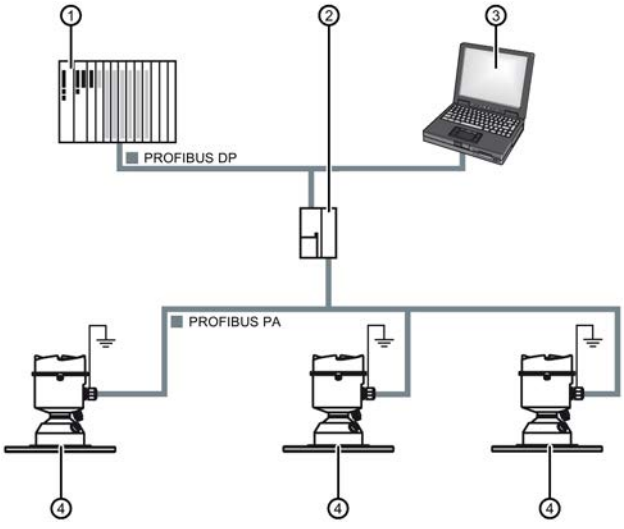

① active PLC
② DP/PA coupler
③ PC/laptop
④ SITRANS LR560 PA

4.3 Disassembly

WARNING

Incorrect disassembly

The following risks may result from incorrect disassembly:

- Injury through electric shock

- Risk through emerging media when connected to the process

- Risk of explosion in hazardous area

In order to disassemble correctly, observe the following:

- Before starting work, make sure that you have switched off all physical variables such as pressure, temperature, electricity etc. or that they have a harmless value.
- If the device contains hazardous media, it must be emptied prior to disassembly. Make sure that no environmentally hazardous media are released.
- Secure the remaining connections so that no damage can result if the process is started unintentionally.

DANGER

Pressure applications

Danger to personnel, system and environment will result from improper disassembly.

- Never attempt to loosen, remove, or disassemble process connection while vessel contents are under pressure.

Connecting 5

5.1 Basic safety information

WARNING

Unsuitable cables, cable glands and/or plugs

Risk of explosion in hazardous areas.

- Use only cable glands/plugs that comply with the requirements for the relevant type of protection.
- Tighten the cable glands in accordance with the torques specified in Technical data (Page 134).
- Close unused cable inlets for the electrical connections.
- When replacing cable glands, only use cable glands of the same type.
- After installation, check that the cables are seated firmly.

WARNING

Hazardous contact voltage

Risk of electric shock in case of incorrect connection.

- For the electrical connection specifications, refer to the information in Technical data (Page 134).
- At the mounting location of the device observe the applicable directives and laws for installation of electrical power installations with rated voltages below 1000 V.

NOTICE

Condensation in the device

Damage to device through formation of condensation if the temperature difference between transportation or storage and the mounting location exceeds 20 °C (36 °F).

- Before taking the device into operation, let the device adapt for several hours in the new environment.

WARNING

Missing PE/ground connection

Risk of electric shock.

Depending on the device version, connect the power supply as follows:

- **Power plug**: Ensure that the used socket has a PE/ground conductor connection. Check that the PE/ground conductor connection of the socket and power plug match each other.
- **Connecting terminals**: Connect the terminals according to the terminal connection diagram. First connect the PE/ground conductor.

5.1.1 Incorrect connection to power source

WARNING

Incorrect connection to power source

Risk to personnel, system and environment can result from improper power connection.

- The DC input terminals shall be supplied from a source providing electrical isolation between the input and output, in order to meet the applicable safety requirements of IEC 61010-1. For example, Class 2 or Limited Energy Source.
- All field wiring must have insulation suitable for rated voltages.

WARNING

Unprotected cable ends

Risk of explosion through unprotected cable ends in hazardous areas.

- Protect unused cable ends in accordance with IEC/EN 60079-14.

WARNING

Improper laying of shielded cables

Risk of explosion through compensating currents between hazardous area and the non-hazardous area.

- Shielded cables that cross into hazardous areas should be grounded only at one end.
- If grounding is required at both ends, use an equipotential bonding conductor.

WARNING

Incorrect selection of type of protection

Risk of explosion in areas subject to explosion hazard.

This device is approved for several types of protection.

1. Decide in favor of one type of protection.
2. Connect the device in accordance with the selected type of protection.
3. In order to avoid incorrect use at a later point, make the types of protection that are not used permanently unrecognizable on the nameplate.

Note

Electromagnetic compatibility (EMC)

You can use this device in industrial environments, households and small businesses.

For metal housings there is an increased electromagnetic compatibility compared to high-frequency radiation. This protection can be increased by grounding the housing, see Connecting (Page 30).

5.2 Connecting SITRANS LR560

Note

- Check the device label on your instrument, to verify the approval rating.
- Use appropriate conduit seals to maintain IP or NEMA rating.
- Use twisted pair cable: AWG 22 to 14 (0.34 mm² to 2.5 mm²).
- Separate cables and conduits may be required to conform to standard instrumentation wiring practices or electrical codes.

1. Loosen locking screw.
2. Remove LR560 lid.
3. Remove optional display by gently turning the display a quarter turn counter-clockwise until it is free.
4. Strip the cable jacket for approximately 70 mm (2.75") from the end of the cable, and thread the wires through the gland[1)].
5. Connect the wires to the terminals as shown: the polarity is identified on the terminal block.
6. Ground the instrument according to local regulations.
7. Tighten the gland to form a good seal.
8. Replace optional display and device lid.
9. Tighten locking screw.

[1)] If cable is routed through conduit, use only approved suitable-size hubs for waterproof applications.

Removing the lid and display

Terminal block

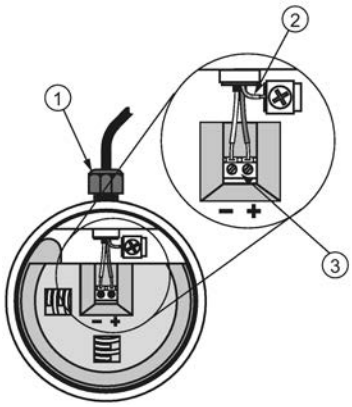

① cable gland (or NPT cable entry
② cable shield
③ instrument connection

5.3 Basic PLC configuration

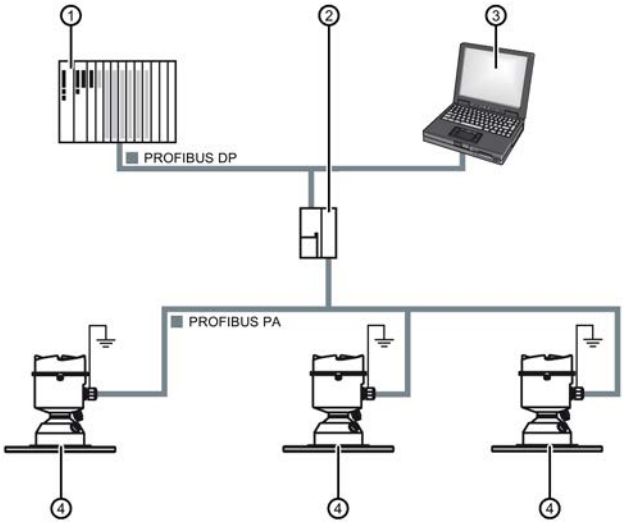

① active PLC
② DP/PA coupler
③ PC/laptop
④ SITRANS LR560 PA

5.4 PLC configuration for hazardous areas

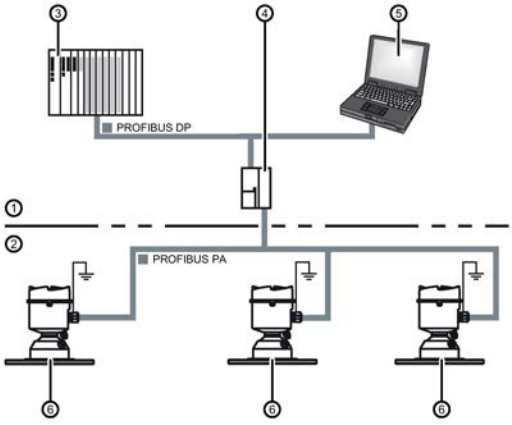

① Non-hazardous area
② Hazardous area
③ PLC (active)
④ DP/PA coupler
⑤ PDM
⑥ SITRANS LR560 PA

5.5 Nameplates for hazardous area installations

Note

Sample nameplate

The serial number and assembly location shown on the nameplate are given as examples only.

5.5.1 PROFIBUS PA Non-Sparking/Energy Limited wiring (Europe) and Dust Ignition Proof wiring (Europe/International)

PROFIBUS PA

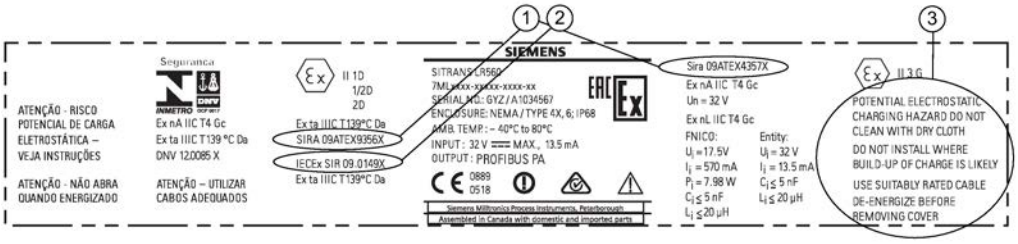

① ATEX certificate number	The ATEX certificates can be found on the product website. Go to LR560 (www.siemens.com/LR560) > **Support** > **Approvals/Certificates.** For more information on hazardous area approvals, see Technical data (Page 134).
② IECEx certificate number	The IECEx certificate can be found on the IECEx website. Go to IECEX (http://iecex.iec.ch) > **Certified Equipment** and enter the IECEx SIR number.
③ Safety notes	Potential electrostatic charging hazard. Do not clean with dry cloth. Do not install where build-up of charge is likely. Use suitably rated cable. De-energize before removing cover.

5.5.2 FM/CSA Class 1, Div 2 installation and connection drawing

The FM/CSA Class 1, Div 2 connection drawing (A5E02795836) listed on the device nameplate can be downloaded from the Siemens Industry Image Database:

FM/CSA Class 1, Div 2 connection drawing A5E02795836 (http://www.automation.siemens.com/bilddb/index.aspx?gridview=view2&objkey=G_FI01_XX_05528&showdetail=true&view=Search)

5.6 Instructions specific to hazardous area installations

5.6.1 (Reference European ATEX Directive 2014/34/EU, Annex II, 1.0.6)

The following instructions apply to equipment covered by certificate number SIRA 09ATEX9356X and Sira 09ATEX4357X.

1. For use and assembly and details of marking/coding, refer to the main instructions.
2. The equipment is certified for use as Category 1D, 1/2D and 2D equipment per certificate Sira 09ATEX9356X and may be used in hazardous zones 20, 21 and 22. The equipment is also certified for use as Category 3G equipment per certificate Sira 09ATEX4357X and may be used in hazardous zone 2.

3. This equipment has a maximum surface temperature of 139 °C (in an 80 °C ambient). Refer to the applicable code of practice for selection of this equipment with respect to specific dust ignition temperatures.
4. The equipment is certified for use in an ambient temperature range of -40 °C to 80 °C.
5. The equipment has not been assessed as a safety related device (as referred to by Directive 2014/34/EU Annex II, clause 1.5).
6. Installation and inspection of this equipment shall be carried out by suitably trained and authorized personnel in accordance with the applicable code of practice.
7. The equipment shall be installed such that the supply cable is protected from mechanical damage. The cable shall not be subjected to tension or torque. The equipment manufacturer is not responsible for providing the supply cable.
8. Repair of this equipment shall be carried out by suitably trained and authorized personnel in accordance with the applicable code of practice.

5.6.2 Special conditions for safe use

SPECIAL CONDITIONS FOR SAFE USE

The 'X' suffix to the certificate number relates to the following special condition(s) for safe use:

- Parts of the enclosure may be non-conducting and may generate an ignitioncapable level of electrostatic charge under certain extreme conditions. The user should ensure that the equipment is not installed in a location where it may be subjected to external conditions (such as high-pressure steam), which might cause a build-up of electrostatic charge on non-conducting surfaces.
- The end user must ensure that an ingress protection of at least IP65 is maintained at each entry to the enclosure by use of a blanking element or cable entry device that meets the requirements of the protection concepts type ‘n’ or increased safety ‘e’ or flameproof ‘d’.
- The supply to the equipment shall be rated for a prospective short-circuit current of not more than 10 kA and shall be protected by a suitably-rated fuse.

Commissioning 6

6.1 Basic safety notes

WARNING

Improper commissioning in hazardous areas

Device failure or risk of explosion in hazardous areas.

- Do not commission the device until it has been mounted completely and connected in accordance with the information in Installing/mounting (Page 20).
- Before commissioning take the effect on other devices in the system into account.

WARNING

Commissioning and operation with pending error

If an error message appears, correct operation in the process is no longer guaranteed.

- Check the gravity of the error.
- Correct the error.
- If the error still exists:
  - Take the device out of operation.
  - Prevent renewed commissioning.

WARNING

Hot surfaces

Risk of burns resulting from hot surfaces.

- Take corresponding protective measures, for example by wearing protective gloves.

WARNING

Loss of type of protection

Risk of explosion. Damage to device if the enclosure is open or not properly closed. The type of protection specified on the nameplate or in Technical data (Page 134) is no longer guaranteed.

- Make sure that the device is securely closed.

WARNING

Hazardous contact voltage

Risk of injury through hazardous contact voltage when the device is open or not completely closed.

The degree of protection specified on the nameplate or in Technical data (Page 134) is no longer guaranteed if the device is open or not properly closed.

- Make sure that the device is securely closed.

DANGER

Toxic gases and liquids

Danger of poisoning when venting the device: if toxic process media are measured, toxic gases and liquids can be released.

- Before venting ensure that there are no toxic gases or liquids in the device, or take the appropriate safety measures.

WARNING

Loss of explosion protection

Risk of explosion in hazardous areas if the device is open or not properly closed.

- Close the device as described in Installing/mounting (Page 20).

WARNING

Hazardous gases in the enclosure

Risk of explosion.

Hazardous gases are gases that can explode and have a gas concentration of more than 25% of the lower explosion limit (LEL). Under normal ambient conditions the LEL is the risk threshold when handling these gases. However, special operating conditions can lower the potential risk from these gases under the LEL. A value of 25% of the LEL is regarded as definitely safe.

- Do not introduce combustible or hazardous gases into a restricted-breathing enclosure (type of protection Ex nR).

6.2 Activating the LR560 note

Note

Toggling between *Program* and *Measurement* modes

- To enter Program mode using the device buttons, press RIGHT ▶. Press LEFT ◀ to return to Measurement mode.
- To toggle between Measurement and Program Mode using the handheld programmer, press Mode.

6.3 Activating the radar device

Power up the instrument. A transition screen showing first the Siemens logo and then the current firmware revision is displayed while the first measurement is being processed. The first time the device is configured, you will be prompted to select a language (English, German, French, Spanish or Chinese).

Press **Mode** to toggle between Measurement and Program mode.

6.4 The LCD display

Measurement mode display[1)2)]: Normal operation

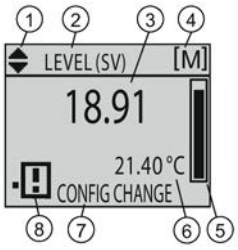

①	toggle indicator[1)] for PV or SV (primary or secondary values)	⑦	text area displays status messages	
②	selected operation: level, space, or distance	or		
③	measured value (level, space, or distance)	⑦	text area displays a fault code and an error message	
④	units	⑧	device status indicator	
⑤	bar graph indicates level	or		
⑥	secondary region indicates on request[2)] electronics temperature, echo confidence, loop current, or distance	⑧	service required icon appears	**Fault present:** S: 0 LOE

PROGRAM mode display

Navigation view

- A visible menu bar indicates the menu list is too long to display all items.
- The depth of the item band on the menu bar indicates the length of the menu list: a deeper band indicates fewer items.
- The position of the item band indicates the approximate position of the current item in the list. A band halfway down the menu bar indicates the current item is halfway down the list.

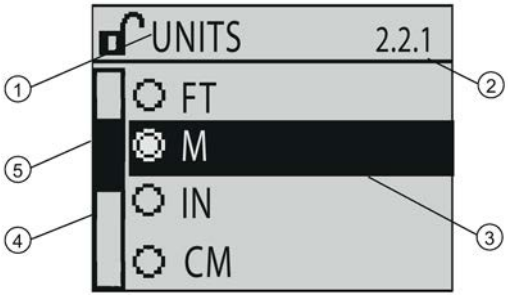

① current menu
② current item number
③ current item
④ menu bar
⑤ item band

Parameter view

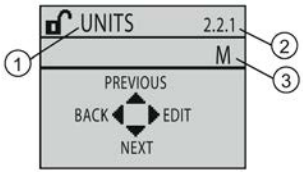

Edit view

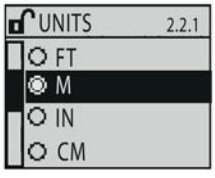

① parameter name

② parameter number

③ parameter value/selection

[1] Press UP or DOWN arrow to switch
[2] In response to a key press request. For details, see Key functions in measurement mode (Page 44).

6.5 Device Address

Note

See Master Reset (Page 70) to rest Device Address to 126.

The unique address of the device on the network (also called PROFIBUS address).

Values 0-126

Default 126

1. In PROGRAM mode, navigate to Level Meter > COMMUNICATION (5.)> DEVICE ADDRESS (5.1.).
2. Press **RIGHT arrow** twice to open parameter view and enable Edit mode.
3. If required, key in a new value and press **RIGHT arrow** to accept it. The LCD displays the new value.
4. Press **Mode** to return to Measurement mode.

6.6 Commissioning via local display

SITRANS LR560 carries out its level measurement tasks according to settings made via parameters. The settings can be modified locally via the optional local graphical display which consists of an LCD display with buttons. You can use either the push buttons or an infrared handheld programmer to make changes.

① push buttons

A Quick Start Wizard provides an easy step-by-step procedure to help you configure the device for a simple application. There are two ways to access the wizard:

- locally, see Quick Start Wizard via the local display push buttons (Page 42) or Quick Start Wizard via the handheld programmer (Page 48)
- from a remote location, see Operating via SIMATIC PDM (Page 53) or Operating via FDT (field device tool) (Page 74). For the complete list of parameters, see LANGUAGE (7.) (Page 122).

6.6.1 Quick Start Wizard via the local display push buttons

1. Press RIGHT ▶ to enter Program Mode.
2. Choose Quick Start (1.), and then Quick Start Wizard (1.1.).
3. Follow the steps then choose Finish to save Quick Start parameter changes and return to Program menu, or press LEFT ◀ to return to Measurement mode.

To add or delete digits using the push buttons:

When the enter icon ↵ is lit, press UP ▲ to insert a digit on the right, DOWN ▼ to delete the right-most digit, RIGHT ▶ to accept the value, or LEFT ◀ to cancel.

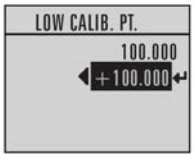

1. Navigate to the parameter you wish to modify and press RIGHT ▶ to edit it. The value will be highlighted.
2. Press UP ▲ or DOWN ▼ to delete the highlighted value, or LEFT ◀ to modify the value from the left-most digit, starting with the plus/minus sign.
3. With the plus or minus sign highlighted, press up or down arrow to change it. Press right arrow to highlight the next digit to the right.
4. Use UP ▲ or DOWN ▼ to modify the highlighted digit. Scroll past 9 to reach the decimal point.
5. When the value is complete, press RIGHT ▶ until the Enter icon is highlighted, then press RIGHT ▶ to accept the value.

To modify a text string:

1. Navigate to the parameter you wish to modify and press RIGHT ▶ to edit it. The string will be highlighted.
2. Follow the same steps as above, to add, delete, or modify characters.

6.7 Commissioning via handheld programmer

6.7.1 Handheld programmer (Part No. 7ML1930-1BK)

The programmer is ordered separately.

The handheld programmer used with this device contains lithium batteries that are non-replaceable.

6.7.2 Lithium batteries

Lithium batteries are primary power sources with high energy content designed to provide the highest possible degree of safety.

WARNING

Potential hazard

Lithium batteries may present a potential hazard if they are abused electrically or mechanically. Observe the following precautions when handling and using lithium batteries:

- Do not short-circuit, recharge or connect with false polarity.
- Do not expose to temperatures beyond the specified temperature range.
- Do not incinerate.
- Do not crush, puncture or open cells or disassemble.
- Do not weld or solder to the battery's body.
- Do not expose contents to water.

6.7.3 Key functions in measurement mode

Key functions in measurement mode

Key	Function	Result
5	Updates the loop current	New value is shown in secondary region of local display.
6	Updates internal enclosure temperature reading	
8	Updates echo confidence value	New value is shown in secondary region of local display.
	Updates distance measurement	
	Mode opens PROGRAM mode	Opens the menu level last displayed in this power cycle, unless power has been cycled since exiting PROGRAM mode or more than 10 minutes have elapsed since PROGRAM mode was used. Then top level menu will be displayed.
	Home toggles local display	Local display toggles between % or linear units
	RIGHT arrow opens PROGRAM mode	Opens the top level menu.
	UP or **DOWN arrow** toggles between linear units and percent	Local display shows measured value in either linear units or percent.

6.7.4 Programming

Note

- While the device is in PROGRAM mode the output remains fixed and does not respond to changes in the device.
- The device automatically returns to Measurement mode after a period of inactivity in PROGRAM mode (between 15 seconds and 2 minutes, depending on the menu level).

6.7.4.1 Parameter menus

Change parameter settings and set operating conditions to suit your specific application. For remote operation, see Operating via SIMATIC PDM (Page 53) or Operating via FDT (field device tool) (Page 74).

Parameter menus

Note

Parameters

For the complete list of parameters with instructions, see Parameter Reference (Page 76).

Parameters are identified by name and organized into function groups, then arranged in a 5-level menu structure, see HMI menu (Page 177).

2. SETUP
  2.4. SIGNAL PROCESSING
    2.4.5. ECHO SELECT
      2.4.5.1. ALGORITHM

1. Enter **PROGRAM** mode	Using local display buttons: • Press RIGHT ▶
	Using handheld programmer: 1. Point the programmer at the display from a maximum distance of 300 mm (1 ft). 2. RIGHT activates PROGRAM mode and opens menu level 1. 3. Mode opens the menu level last displayed in PROGRAM within the last 10 minutes, or menu level 1 if power has been cycled since then.
2. Editing in **PROGRAM** mode	To select a listed option: 1. Navigate to the desired parameter. 2. Press RIGHT to open parameter view. 3. Press RIGHT again to open Edit mode. The current selection is highlighted. Scroll to a new selection. 4. Press RIGHT to accept it. 5. The local display returns to parameter view and displays the new selection.
	To change a numeric value: 1. Navigate to the desired parameter. 2. Press RIGHT to open parameter view. 3. The current value is displayed. 4. Press RIGHT again to open Edit mode. The current value is highlighted. Key in a new value. Press RIGHT to accept it. 5. The local display returns to parameter view and displays the new selection.

Note

Navigation

- In Navigation mode, ARROW keys move to the next menu item in the direction of the arrow.
- For Quick Access to parameters via the handheld programmer, press Home , and then enter the menu number, for example: 3.2. Echo Profile.

Key functions in Navigation mode

Key	Name	Menu level	Function
	UP or DOWN arrow	menu or parameter	Scroll to previous or next menu or parameter.
	RIGHT arrow	menu	Go to first parameter in the selected menu, or open next menu.
		parameter	Open Edit mode.
	LEFT arrow	menu or parameter	Open parent menu.
	Mode	menu or parameter	Change to **MEASUREMENT** mode.
	Home	menu or parameter	Open top level menu: menu 1.

Key functions in Program mode

Key	Name		Function
	UP or DOWN arrow	Selecting options	Scrolls to item.
		Alphanumeric editing	• Increments or decrements digits • Toggles plus and minus sign
	RIGHT arrow	Selecting options	• Accepts the data (writes the parameter) • Changes from Edit to Navigation mode
		Numeric editing	• Moves cursor one space to the right • Or with cursor on Enter sign, accepts the data and changes from Edit to Navigation mode
	LEFT arrow	Selecting options	Cancels Edit mode without changing the parameter
		Numeric editing	• Moves cursor to plus/minus sign if this is the first key pressed • Or moves cursor one space to the left. • Or with cursor on Enter sign, cancels the entry
C	Clear	Numeric editing	Erases the display
•	Decimal point	Numeric editing	1. In Edit mode, enter a decimal point. 2. In Parameter View, press • to store menu path to that parameter, and create custom Secondary Value to be displayed in secondary region of LCD.
−/+	Plus or minus sign	Numeric editing	Changes the sign of the entered value.
0 to 9	Numeral	Numeric editing	Enters the corresponding character. Editing in **PROGRAM** mode

6.7.4.2 Quick Start Wizard via the handheld programmer

Note

- A reset to factory defaults should be performed before running the Quick Start Wizard if the device has been used in a previous application. See Quick Start Wizard via the local display push buttons (Page 42).
- The Quick Start wizard settings are inter-related and changes apply only after you select **Finish** in the Wizard Complete step.
- Do not use the Quick Start wizard to modify parameters: see instead Parameter Reference (Page 76). Perform customization for your application only after the Quick Start has been completed.

Quick Start Wizard

1. Point the programmer at the display from a maximum distance of 300 mm (1 ft.), then press RIGHT to activate PROGRAM mode and open menu level 1.
2. Press RIGHT twice to navigate to menu item 1.1 and open parameter view.
3. Press RIGHT to open Edit mode or DOWN to accept default values and move directly to the next item.
4. To change a setting, scroll to the desired item or key in a new value.
5. After modifying a value, press RIGHT to accept it and press DOWN to move to the next item.
6. At any time, you can press UP to go back, or LEFT to cancel and return to Measurement mode.

Vessel

Factory setting:	STEEL
Setting range:	STEEL or CONCRETE
Purpose:	Select vessel construction material.
Description:	• Selecting either STEEL or CONCRETE does a functional reset; see MASTER RESET (4.2.) (Page 108). • Selecting STEEL changes the setting for POSITION DETECT (2.4.5.2.) (Page 88) to Rising Edge and for ALGORITHM (2.4.5.1.) (Page 88) to F. • Selecting CONCRETE changes the setting for POSITION DETECT (2.4.5.2.) (Page 88) to Rising Edge and for ALGORITHM (2.4.5.1.) (Page 88) to ALF.

Parameter view

Edit mode

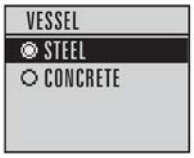

Response rate

Factory setting:	MED		
Setting range:	**Response rate**	**Fill rate per Minute/Empty rate per Minute**	**Damping Filter**
	SLOW	0.1 m/min (0.32 ft/min)	600 s
	MED	1.0 m/min (3.28 ft/min)	60 s
	FAST	10.0 m/min (32.8 ft/min)	0 s
Purpose:	Sets the reaction speed of the device to measurement changes in the target range. Selecting SLOW changes setting for AVERAGE AMOUNT (2.8.3.) (Page 100) to 0.9.		
Description:	Use a setting just faster than the maximum vessel filling or vessel emptying rate (whichever is greater).		

Parameter view

Edit mode

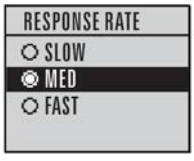

Units

Factory setting:	m
Setting range:	m, cm, mm, ft, in
Purpose:	Sensor measurement units.

Parameter view

Edit mode

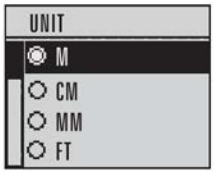

Operation

Factory setting:	LEVEL	
Setting range:	LEVEL	Distance to material surface referenced from Low calibration point
	SPACE	Distance to material surface referenced from High calibration point
	DISTANCE	Distance to material surface referenced from Sensor reference point
Purpose:	Sensor measurement units.	

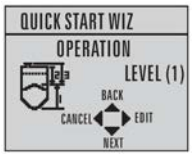

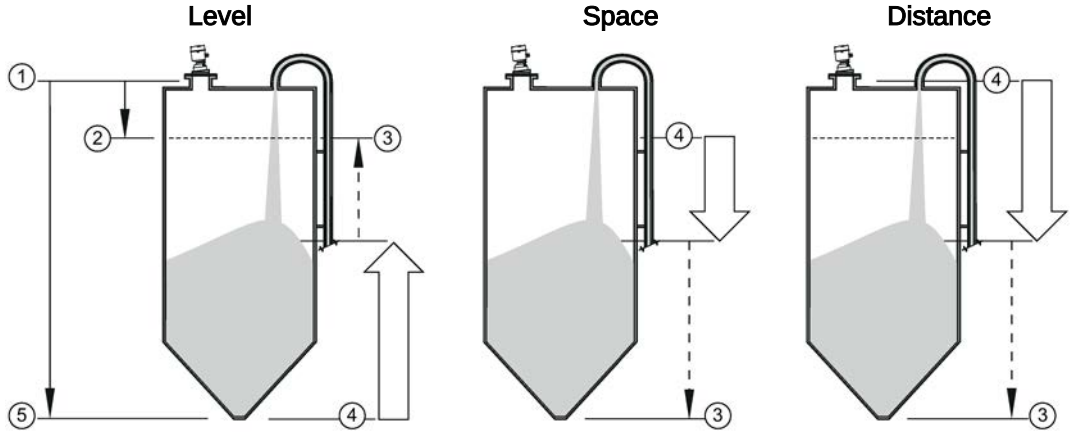

① sensor reference point
② high calibration point
③ 20 mA, 100%
④ 4 mA, 0%
⑤ low calibration point

Low calibration point

Factory setting:	40.000 m or 100.000 m
Setting range:	0.000 to 40.000 m or 0.000 to 100.000 m
Purpose:	Distance from Sensor Reference to Low Calibration Point: usually process empty level. See Dimension drawings (Page 139) for an illustration.

Parameter view

Edit mode

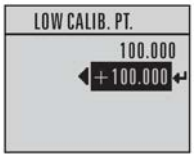

High calibration point

Factory setting:	0.000 m
Setting range:	0.000 to 40.000 m or 0.000 to 100.000 m
Purpose:	Distance from Sensor Reference Point to High Calibration Point: usually process full level. See Dimension drawings (Page 139) for an illustration.

Parameter view

Edit mode

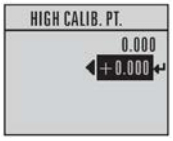

Wizard complete

Setting range:	BACK, CANCEL, FINISH (Display returns to 1.1 Quick Start Wizard menu when Quick Start is successfully completed.)
Description:	To transfer Quick Start values to the device and return to Program menu, press DOWN (Finish). Then press LEFT to return to Measurement mode.

6.7.4.3 Requesting an Echo Profile

1. Enter PROGRAM mode	Navigate to: **Level Meter > Diagnostics (3.) > Echo profile (3.1.)**.	
	Press RIGHT to request a profile.	
	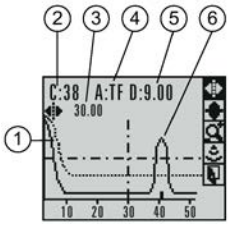 ① TVT ② Confidence ③ Distance from Low Calibration Point to vertical cross-hair ④ Algorithm: tF (trueFirst) ⑤ Distance from flange face to target ⑥ Echo	
2. Accessing features	Use UP or DOWN to scroll to an icon. When an icon is highlighted, that feature becomes active.	
	Move a cross-hair	Press RIGHT to increase the value, LEFT to decrease.
	Zoom into an area	Position the intersection of the cross-hairs at the center of that area, select Zoom, and press RIGHT. Press LEFT to Zoom out.
	Update the profile	Select Measure and press RIGHT.
	Return to the previous menu	Select Exit then press RIGHT.

6.8 Application example

6.8.1 Level application example

The application is a vessel that takes an average 3 hours (180 minutes) to fill and 3 weeks to empty.

Fill rate = 0.08 m/minute [(Low Cal Pt. minus High Cal Pt.) / fastest of fill or empty time]
= (15.5 m – 1 m) / 180 min.
= 14.5 m /180 min. = 0.08 m/min.

Therefore SLOW response rate (0.1 m/minute) can be selected.

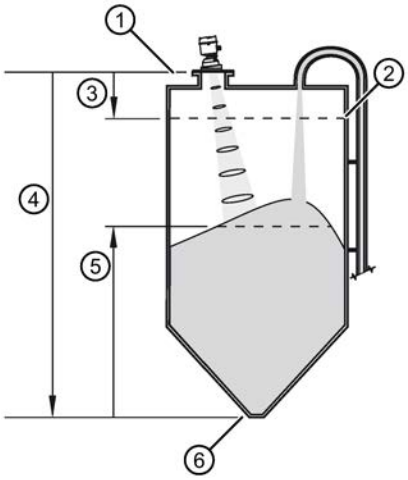

① sensor reference point
② high calibration point
③ 1.0 m
④ 15.5 m
⑤ level
⑥ low calibration point

Quick Start Parameter	Setting	Description
Vessel	STEEL	Selects vessel construction material.
Response Rate	SLOW	Resets fill rate and empty rate to 0.1 m/minute.
Units	m	Sensor measurement units.
Operation	LEVEL	Material level referenced from low calibration point
Low Calibration Point	15.5	Process empty level.
High Calibration Point	1.0	Process full level.
Wizard Complete	FINISH	Save new settings and exit Wizard

Operating 7

7.1 Remote operation

7.1.1 Operating via SIMATIC PDM

Note

- For a complete list of parameters, see Parameter Reference (Page 76).
- While the device is in **PROGRAM** mode the output remains fixed and does not respond to changes in the device.

SIMATIC PDM is a software package used to commission and maintain process devices. Please consult the operating instructions or online help for details on using SIMATIC PDM. You can find more information on versions and compatibility at our website.

7.1.1.1 PDM function overview

SIMATIC PDM monitors the process values, alarms and status signals of the device. It allows you to display, compare, adjust, verify, and simulate process device data; also to set schedules for calibration and maintenance.

Parameters are identified by name and organized into function groups. See LCD menu structure (Page 177) for a chart and Changing parameter settings using SIMATIC PDM (Page 60) for more details. The menu structure for SIMATIC PDM is almost identical to that for the LCD.

See Parameters accessed via pull-down menus (Page 61) for parameters that do not appear in the menu structure in SIMATIC PDM.

7.1.1.2 SIMATIC PDM Version

Check the support page of our website to make sure you have the latest version of SIMATIC PDM, the most recent Service Pack (SP) and the most recent hot fix (HF): Siemens Industry Online Support (https://support.industry.siemens.com/cs/?lc=en-WW) Browse to **Product Support > Automation Technology > Process control systems > SIMATIC PCS 7 > System components > Plant Device Management > SIMATIC PDM.**

7.1.1.3 Updating the Electronic Device Description (EDD)

You can locate the EDD in Device Catalog, under **Sensors/Level/Echo/Siemens AG/SITRANS LR560.** The EDD revision must match the Firmware revision in the device.

To install a new EDD:

1. Go to LR560 (www.siemens.com/LR560) > **Support** > **Software downloads** to download the most up-to-date EDD.
2. Save files to your computer, and extract the zipped file to an easily accessed location.
3. Launch **SIMATIC PDM – Manage Device Catalog**, browse to the unzipped EDD file and select it.

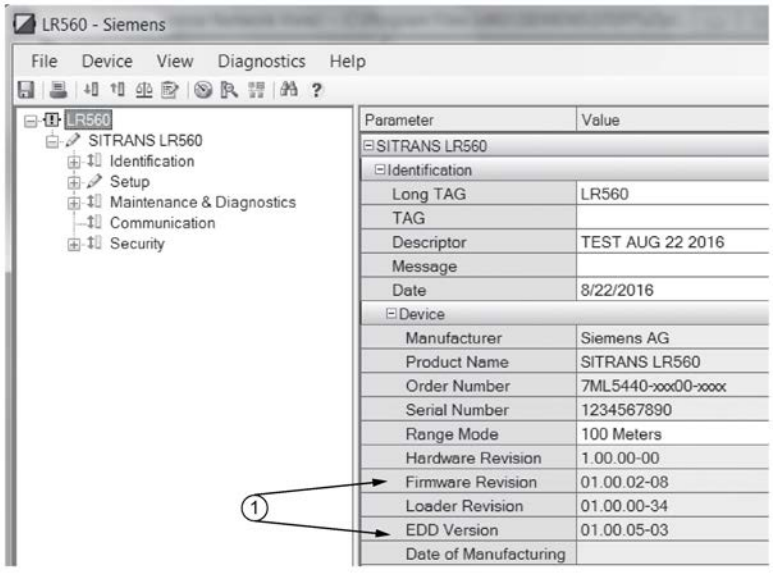

① Firmware and Electronic device description (EDD) revisions

7.1.1.4 Configuring a new device

Note

- Clicking on **Cancel** during an upload from device to SIMATIC PDM will result in some parameters being updated.
- Application Guides for setting up HART and Profibus PA devices with SIMATIC PDM can be downloaded from our website:
  LR560 (www.siemens.com/LR560).

---

1. Check that you have the most recent EDD, and if necessary update it. See Updating the Electronic Device Description (EDD) (Page 53).
2. Launch SIMATIC Manager and create a new project for the device.
3. Open the menu **Device – Master Reset** and click on **OK** to perform a reset to Factory Defaults.
4. After the reset is complete upload parameters to the PC/PG.
5. Configure the device via the Quick Start wizard.

Set Address

Open the menu **Device**>**Set Address,** enter a value for **New Address** and click on **Assign Address.**

7.1.1.5 Quick Start wizard via SIMATIC PDM

The graphic Quick Start Wizard provides an easy step-by-step procedure that configures the device for a simple application.

Please consult the operating instructions or online help for details on using SIMATIC PDM.

1. If you have not already done so, check that you have the most up-to-date Electronic Device Description (EDD) for your device. [See Configuring a new device (Page 54).]
2. Launch SIMATIC Manager and create a new project. Application Guides for setting up HART and PROFIBUS PA devices with SIMATIC PDM can be downloaded from the product page of our website:
   LR560 (www.siemens.com/LR560)

Quick start

Note

- A reset to **Factory Defaults** should be performed before running the Quick Start Wizard if device has been used in a previous application. See Master Reset via SIMATIC PDM (Page 70).
- The Quick Start wizard settings are inter-related and changes apply only after you click on **FINISH AND DOWNLOAD** at the end of the last step to save settings offline and transfer them to the device.
- Do not use the Quick Start Wizard to modify individual parameters: for quick access to echo profile parameters, see Echo Profile via SIMATIC PDM (Page 61) or see Parameter Reference (Page 76) for a complete list. (Perform customization only after the Quick Start has been completed.)
- Click on **BACK** to return and revise settings or **CANCEL** to exit the Quick Start.
- For a vessel with obstructions see Auto False Echo Suppression via SIMATIC PDM (Page 63).

Quick start menu and instruction

Launch SIMATIC PDM, open the menu **Device – Wizard - Quick Start**, and follow steps 1 to 4.

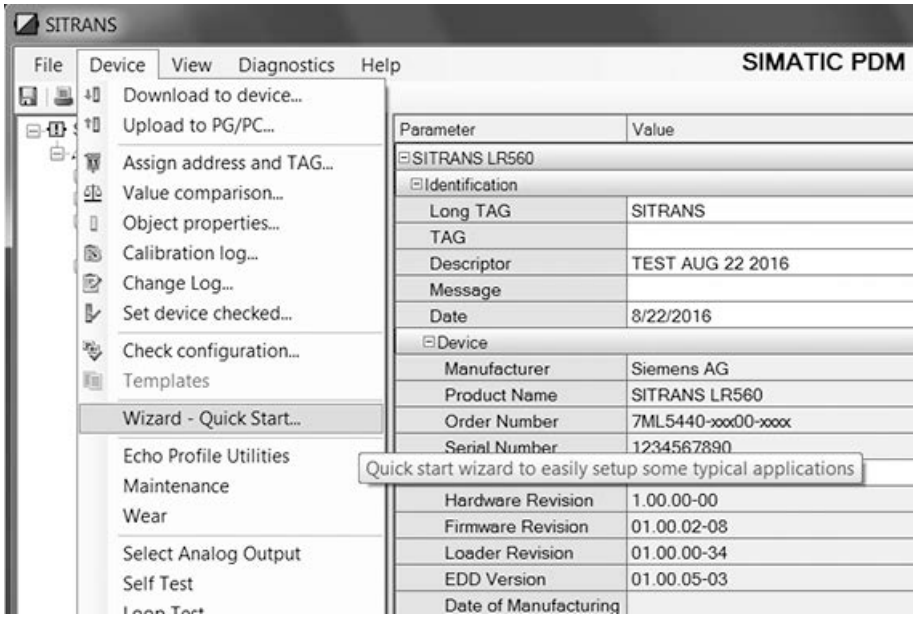

Quick start steps with images

Step 1 – Identification

Note

The layout of the dialog boxes shown may vary according to the resolution setting for your computer monitor.

1. Click on **Read Data from Device** to upload Quick Start parameter settings from the device to the PC/PG and ensure PDM is synchronized with the device.
2. If required, change the language for the local user interface.
3. Click on **NEXT** to accept the default values. (Description, Message, and Installation Date fields can be left blank.)

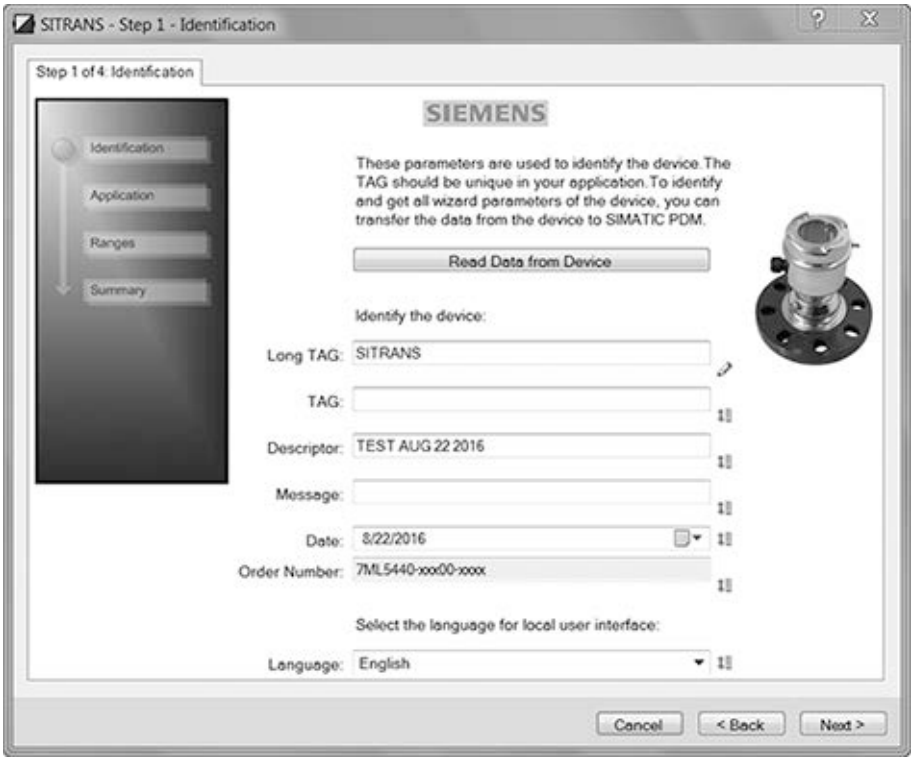

Step 2 – Application

Note

Application selection

- Selecting STEEL changes the setting for POSITION DETECT (2.4.5.2.) (Page 88) to Rising Edge. and for ALGORITHM (2.4.5.1.) (Page 88) to F.
- Selecting CONCRETE changes the setting for POSITION DETECT (2.4.5.2.) (Page 88) to Rising Edge and for ALGORITHM (2.4.5.1.) (Page 88) to ALF.

Select the application type (steel or concrete silo construction), operation type (level, space, or distance) and then click on **NEXT**.

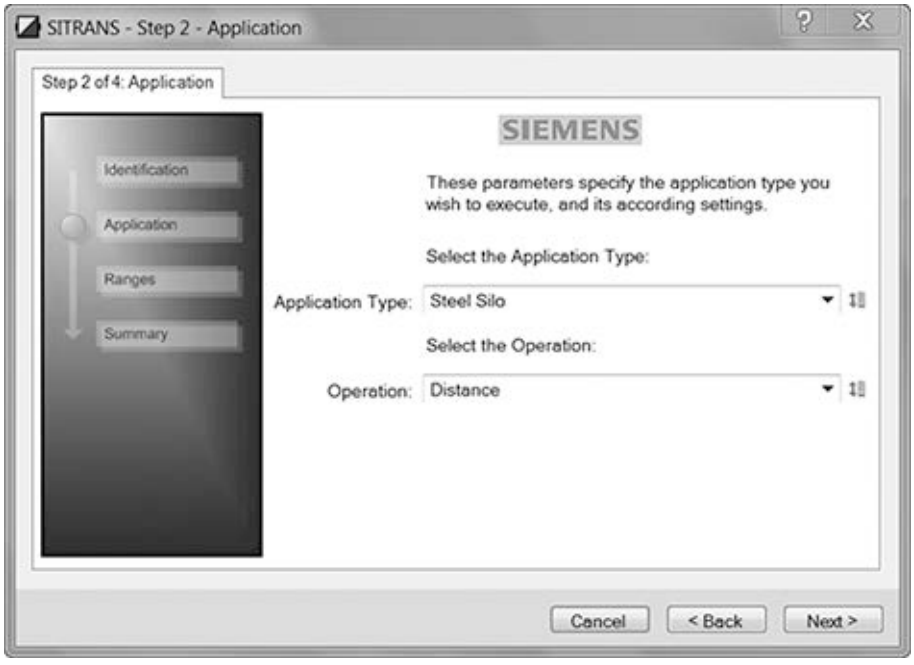

Step 3 – Ranges

Note

SLOW Response Rate

Selecting SLOW Response Rate changes setting for AVERAGE AMOUNT (2.8.3.) (Page 100) to 0.9.

Set the parameters, and click on **NEXT**.

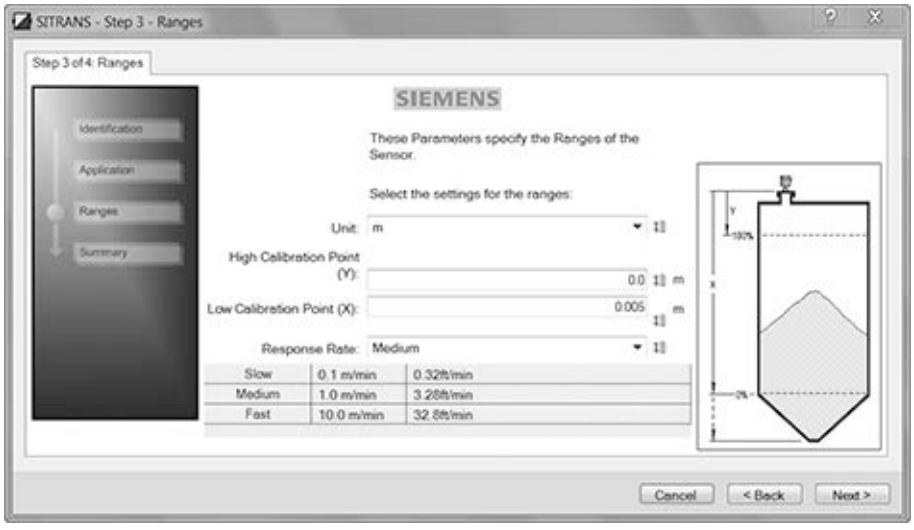

Step 4 – Summary

Check parameter settings, and click on **BACK** to return and revise values, **FINISH** to save settings offline, or **FINISH AND DOWNLOAD** to save settings offline and transfer them to the device.

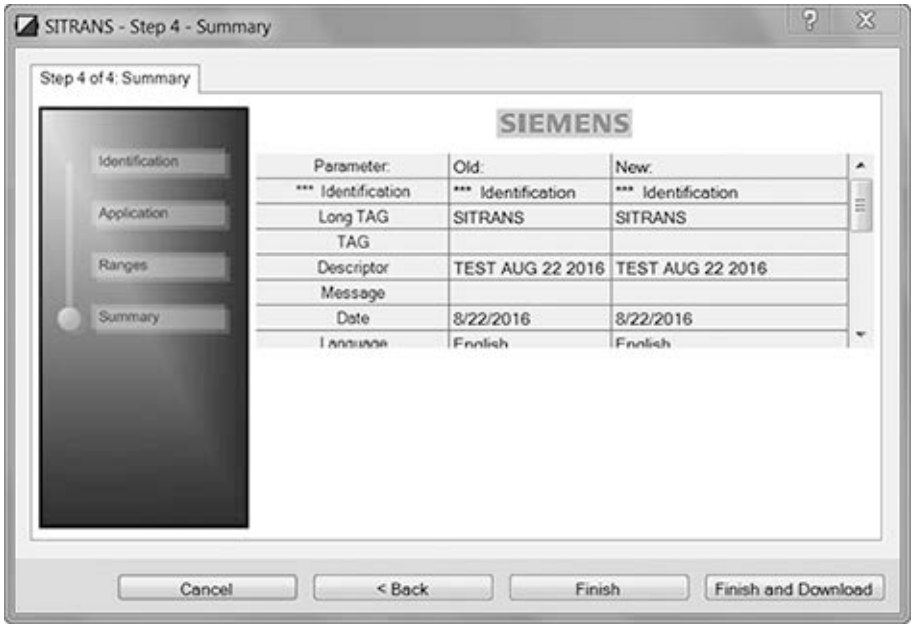

The message **Quick Start was successful** will appear. Click on **OK**.

7.1.1.6 Changing parameter settings using SIMATIC PDM

Changing parameter settings using SIMATIC PDM

Note

- For a complete list of parameters, see Parameter Reference (Page 76).
- Clicking on **Cancel** during an upload from device to SIMATIC PDM will result in some parameters being updated.

Many parameters are accessed via pull-down menus in PDM. See Parameters accessed via pull-down menus (Page 61) for others.

1. Launch SIMATIC PDM, connect to device, and upload data from device.
2. Adjust parameter values in the parameter value field then **Enter**. The status fields read **Changed**.
3. Open the Device menu, click on **Download to device**, then use **File - Save** to save settings offline. The status fields are cleared.

Parameters accessed via pull-down menus

Click on **Device** or **View** to open the associated pull-down menus.

Pull-down menus

Device menus	View menus
Communication path	Process variables (Page 72)
Download to device	Diagnostics (Page 74)
Upload to PC/PG	Toolbar
Update Diagnostic Status	Status bar
Set address	
Quick Start wizard via SIMATIC PDM (Page 55)	Update
Echo profile utilities (Page 61)	
Maintenance (Page 66)	
Acknowledge faults (Page 67)	
Wear (Page 67)	
Simulation (Page 68)	
Write Locking (Page 70)	
Master Reset (Page 70)	

Echo profile utilities

Open the menu **Device – Echo Profile Utilities** and click on the appropriate tab for easy access to:

- Echo profile (Page 61)
- View Saved Echo Profiles (Page 62)
- TVT Shaper (Page 62)
- Auto False Echo Suppression (Page 63)
- Echo Setup (Page 66)

Echo profile

Note

- Double click on each axis to see the Xscale and Data Scale values.
- To zoom in to a section of the profile, left-click and drag a marquee around it. Right click inside the window to zoom out.
- Expand or compress the x and/or y axes:
  - Left-click on the axis and drag in either direction to reposition the low end of the scale.
  - Right-click on the axis and drag in either direction to reposition the high end of the scale.
- After saving a profile click on **OK**, not the **x** button, to close the Echo Profile Utilities window, otherwise the profile will not be saved.

- In the **Echo Profile Utilities** window click the **Echo Profile** tab.
- Initial profile graph is blank upon entry to dialog. Click **Measure** to update the profile.
- It is recommended to use the **Detailed** resolution view of the echo profile for troubleshooting. For faster and more coarse views, the **Standard** resolution may be used.
- Click **Save** and in the new window enter a name and click **OK**.
- Click **OK** to exit.

View saved echo profiles

To view a saved profile, click on the tab **View Saved Echo Profiles**.

Echo profile data logging

You can store up to 60 profiles at a selected interval (maximum 60 minutes). Inside Echo Profile Utilities, in the **Echo Profile Time Based Storage** window:

- Enter the desired interval between stored profiles.
- Enter the maximum number of profiles to be stored (maximum 60).
- Click on **Start**. A message appears warning of the time delay and warning that all previous saved profiles will be overwritten. Click on **OK** to proceed. The new profiles will be saved with their date and time.
- Click on the tab **View Saved Echo Profiles** to view the stored profiles.

TVT Shaper

Note

Double click on each axis to see the X scale and data scale values. Right-click or Left-click on the axis and drag to reposition the scale.

This feature allows you to manually adjust the TVT to avoid false echoes caused by obstructions. For an explanation see Auto False Echo Suppression (Page 151).

Open the menu **Device – Echo Profile Utilities** and click the tab **TVT Shaper**.

- Turn Shaper Mode **On**.
- Initial profile graph is blank upon entry to dialog. Click on **Measure** to view and upload the current TVT from device.
- Change the position of the cursor on the TVT using the **Point+** and **Point–** buttons: raise and lower the TVT using **Offset+** and **Offset-**.
- Alternatively, enter values for **Point** and **Offset** directly into the dialog boxes.
- Click on **Transfer to Device**.

TVT shaper in PDM

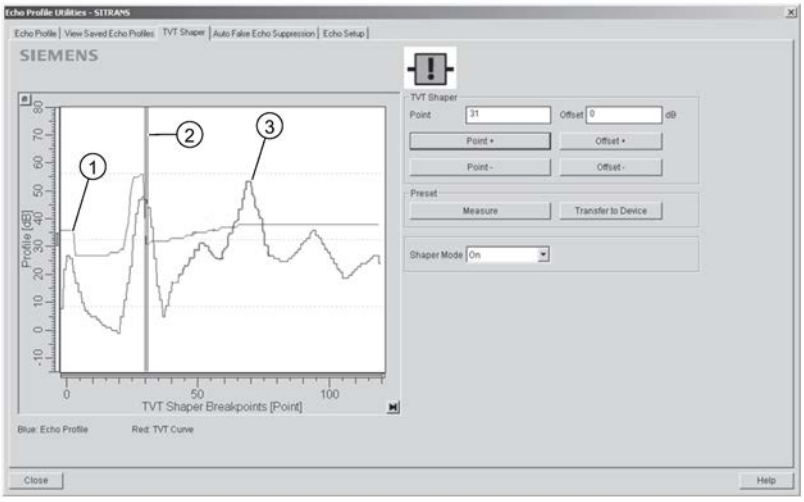

① TVT ② cursor ③ echo profile

Note

Transferring the new values to the device

If the TVT Shaper tab is closed without transferring new values to the device, the new values will appear in the PDM list even though they have not been transferred to the device.

Auto false echo suppression

Note

- Ensure material level is below all known obstructions when using Auto False Echo Suppression to learn the echo profile. An empty or almost empty vessel is recommended.
- Note the distance to material level when learning the echo profile, and set Auto False Echo Suppression Range to a shorter distance to avoid the material echo being screened out.
- Set Auto False Echo Suppression and Auto False Echo Suppression Range during startup, if possible.
- If the vessel contains an agitator it should be running.
- Before adjusting these parameters, rotate the device for best signal (lower false-echo amplitude).

If you have a vessel with known obstructions, use Auto False Echo Suppression to prevent false echo detection. This feature can also be used if the device displays a false high level, or the reading is fluctuating between the correct level and a false high level.

The device learns the echo profile over the whole measurement range and the TVT is shaped around all echoes present at that moment. See Auto False Echo Suppression (Page 148) for a more detailed explanation.

The learned TVT will be applied over a specified range. The default TVT is applied over the remainder of the measurement range.

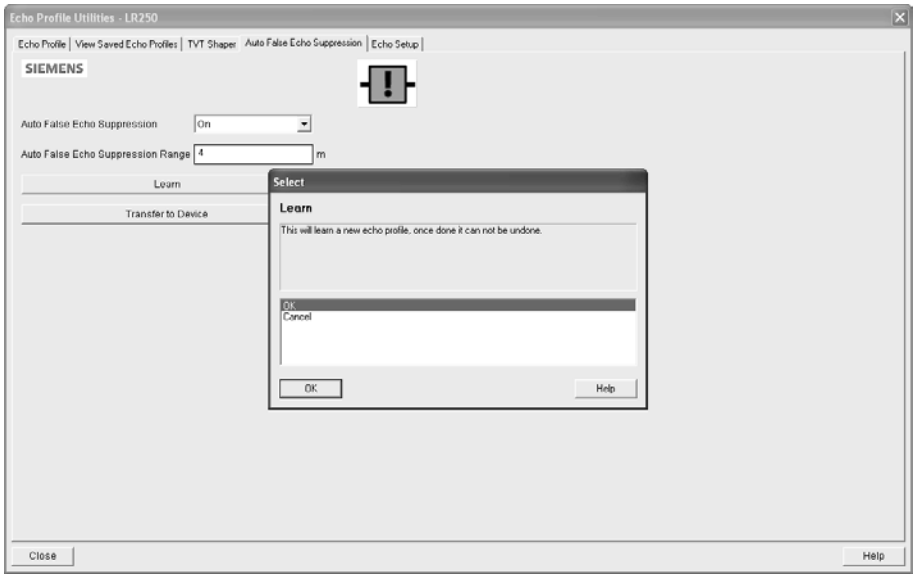

1. Make sure the material level is below all known obstructions.
2. Determine **Auto False Echo Suppression Range**. Measure the actual distance from the sensor reference point to the material surface using a rope or tape measure. Subtract 0.5 m (20") from this distance, and use the resulting value.
3. Open the menu **Device – Echo Profile Utilities** and click on the tab **Auto False Echo Suppression**.
4. Make sure **Auto False Echo Suppression Range** is **On**.
5. Enter the value for **Auto False Echo Suppression Range.**
6. Click **Learn**. The message appears: **'This will learn a new echo profile. Once done it cannot be undone'**. Click **OK**.
7. Once Auto TVT is complete click **Transfer to Device**. To exit click **Close**. Auto TVT is enabled and the learned TVT will be used.
8. To turn **Auto False Echo Suppression** off or on, reopen the **Auto False Echo Suppression** window, change the Auto False Echo Suppression to **Off** or **On**, click on **Transfer to Device.**

Before and after AFES example

Before Auto False Echo Suppression

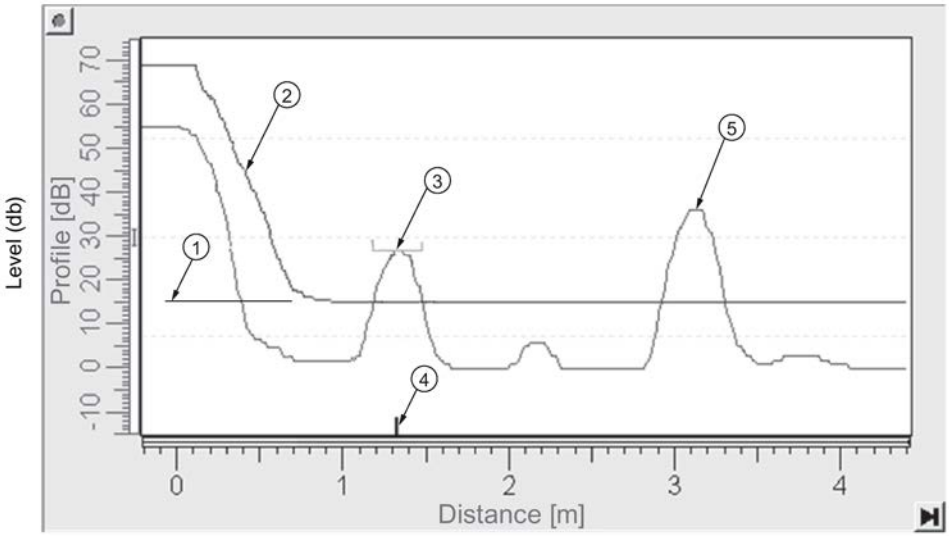

①	TVT Hover Level	④	Echo marker
②	Default TVT	⑤	Material level
③	False echo		

After Auto False Echo Suppression

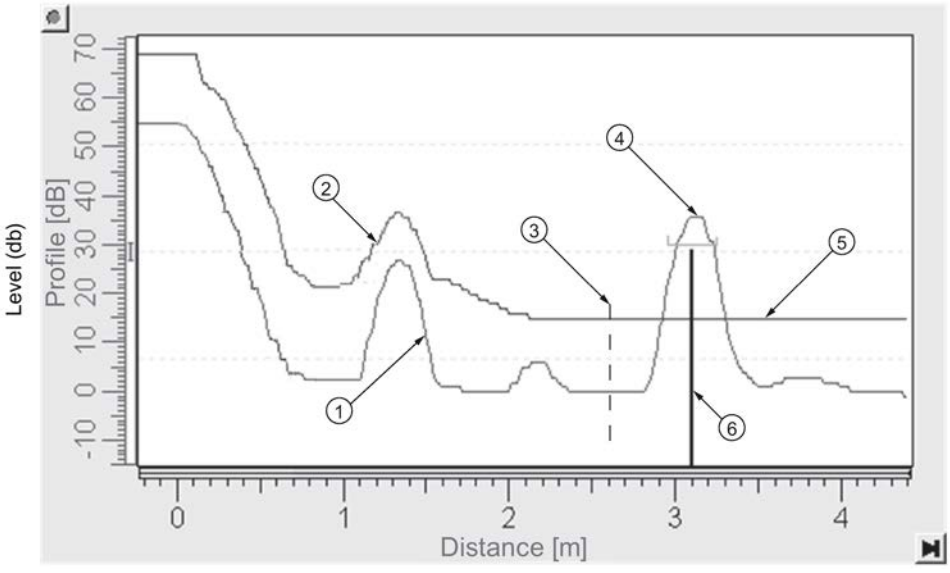

①	False echo	④	Material level
②	Learned TVT	⑤	Default TVT
③	Auto False Echo Suppression Range	⑥	Echo marker

Echo setup

Provides quick access to echo selection, filtering, and response rate parameters.

Open the menu **Device – Echo Profile Utilities** and click on **Echo Setup**.

Maintenance

You can set schedules and reminders for:

- device maintenance based on its projected lifetime
- sensor maintenance based on its projected lifetime
- service
- calibration

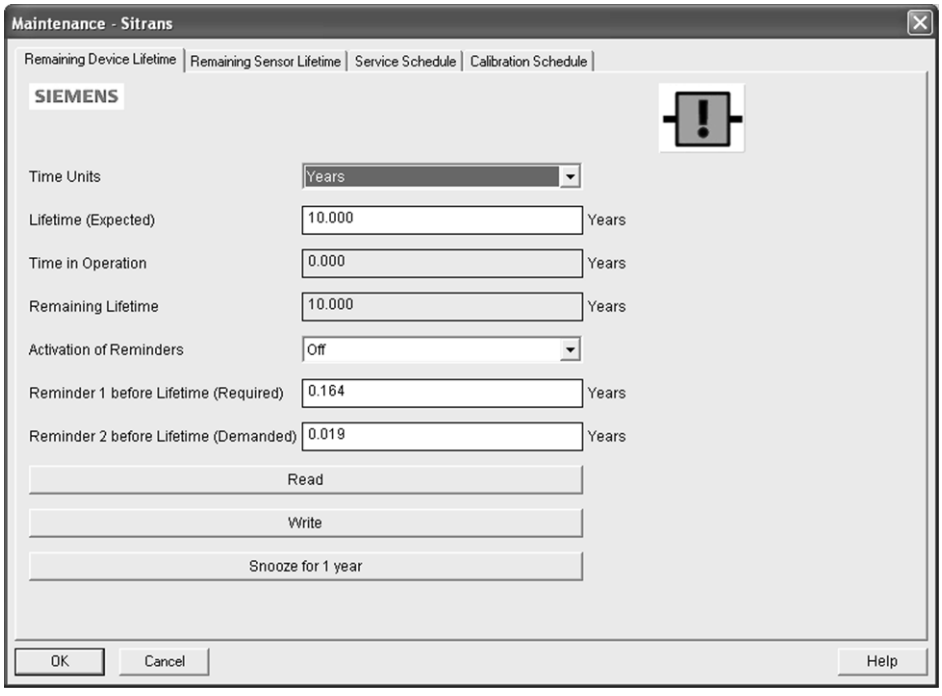

To set Device/Sensor Maintenance schedules:

1. Open the menu **Device – Maintenance**, and click on the **Remaining Device/Sensor Lifetime** tab.
2. Modify desired values, and if desired, set reminders for either or both of **Reminder 1 before Lifetime (Required)**/**Reminder 2 before Lifetime (Demanded)**.
3. Click **Write.**
4. Click **Read**, to see the effects of your modification.
5. Click **Snooze** to add a year to the Total Expected Device Life.

To set Service/Calibration schedules:

1. Open the menu **Device – Maintenance**, and click on the **Service/Calibration Schedule** tab.
2. Modify desired values and if desired, set reminders for either or both of **Reminder 1 before Lifetime (Required)**/**Reminder 2 before Lifetime (Demanded)**.
3. Click **Write.**
4. Click **Read**, to see the effects of your modification.
5. Click **Service/Calibration Performed** to reset the schedule.

Acknowledge faults

Open the menu **Device – Acknowledge Faults**, select the appropriate item from the Extended Diagnostics pull-down menu, and click **Transfer**.

Wear

Reports the number of days the device has been operating, and the number of times it has been powered up.

Open the menu **Device – Wear** to view:

- Powered Days
- Power-on Resets

Note

Powered days are whole days only. Fractional days are truncated.

Analog input function blocks

AIFB1 and AIFB2 Output Conversion

Two identical, independent Analog Input Function Blocks allow you to modify the output to the LCD and the control system by:

- input scaling
- output scaling
- setting alarms and warnings
- selecting display units, damping
- defining the response to a Fail-safe condition

Go to **Level Meter > Setup > Analog Input 1** (or **Analog Input 2**) for access to these parameters. (See Analog Input Function Block function groups (simulation, mode and status) (Page 161) for detailed explanations.)

You can also simulate input and output values, accessed via pull-down menus: see Simulation (Page 68).

Simulation

Note

- The Simulation parameter influences output to the control system.
- Make sure that simulation is disabled after simulation is complete.

For more details, see Analog Input Function Block function groups (simulation, mode and status) (Page 161).

Simulate Analog Input to AIFB1 or AIFB2

You can test your device configuration by simulating the sensor value and status being fed into the Analog Input Function Block, to ensure that your sensor calibration has been correctly carried out for your application.

1. Open the menu **Device – Simulation**, and select the desired function block.
2. Click on the tab **Simulation (Measured value).**

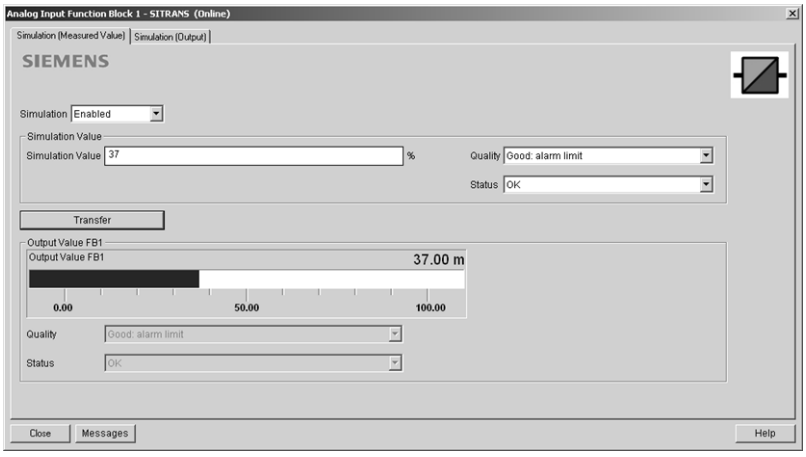

3. Enable simulation, enter a value in sensor units, set the desired quality and status [1] ,and click on **Transfer**.
4. The substitute Output value is displayed in PDM and on the LCD display, in units defined for the function block in question. See *Simulate Output* below, to set the output mode.
5. After simulation is complete, disable simulation and click on **Transfer**.

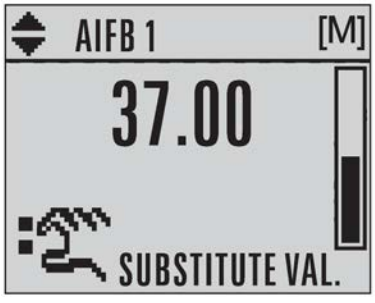

[1] See Status byte (Page 166) for more information on status and quality.

Simulate output

Manual (user-defined value)

1. Open the menu **Device – Simulation**, select function block 1 or 2, and click on the tab Simulation (Output).

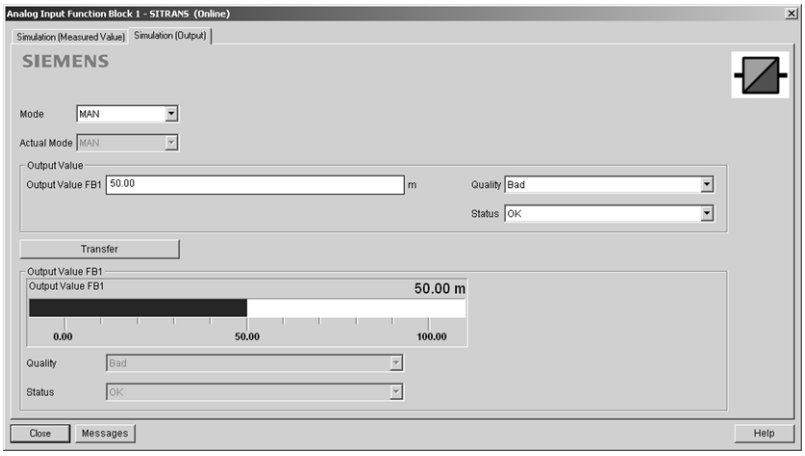

2. Select Manual Mode (from options AUTO, Manual, or Out of Service) and click on **Transfer**.
3. Enter simulated value and click on **Transfer**.
4. After simulation is complete, return to Simulate Output, reselect AUTO mode, and click on **Transfer**.

Out-of-Service

In Out of Service mode, an out of service status is associated with the value, telling the master that the value is invalid. This feature can be used during maintenance.

1. Open the menu **Device – Simulation**, select function block 1 or 2, and click on the tab Simulation (Output).
2. Select Out of Service Mode and click on **Transfer**.
3. After maintenance is complete, return to Simulate Output, reselect AUTO mode, and click on **Transfer**.

Simulate input

Simulate input

Allows you to simulate the sensor value which is input to the Level Transducer Block. This tests everything between the Level Transducer Block and Output.

Ramp start	Range: –999999 to 999999. Default: 0
Ramp end	Range: –999999 to 999999. Default: 0
Number of steps	Range: 1 to 100. Default: 10
Step length	Range: 1 to 60. Default: 5

1. Open the menu **Device – Simulation**, and select **Simulation (Input).**
2. To enable simulation, select **Fixed** or **Ramp**.
3. If you select Ramp, enter the step length and number of steps.
4. Enter the simulated value and click on **Transfer**.
5. After simulation is complete, disable simulation and click on **Transfer.**

Write Locking

Prevents any changes to parameters via PDM or the hand-held programmer. If Write Locking is enabled, the data can be viewed but not modified.

To enable/disable Write Protection:

1. Open the menu Device – Write Locking and turn Write Protection On or Off.
2. Click on Transfer.

Master Reset

Note

- Following a reset, some degree of reprogramming may be required, depending on the option chosen below.
- While performing any reset, a loss of communications can be expected.

Options	Result
Factory Defaults	Resets all parameters to the manufacturer's default settings, with certain exceptions. The list of exceptions includes, but is not limited to: • Message • Descriptor • Installation Date • Device Address • Write Protection • Auto False Echo Suppression Range • Learned TVT • Language
Standard Defaults	Resets all parameters, excluding device addresses and Language, tothe PROFIBUS default settings. NOTE: After initiating a reset to Standard Defaults via the local userinterface, allow 1-2 minutes before initiating a new command locally.
Informational	Resets parameters such as Tag.
Functional	Resets parameters that control device behavior, such as Low Calibration Pt.
Warm Start	Has the same effect as recycling power to the device
Device Address	• Resets the PROFIBUS device address to 126 • If the address lock was on, will disable the lock.

To perform a reset to Factory Defaults:

1. Open the menu **Device – Master Reset**, and click **Factory Defaults**.
2. After the reset is complete click **Close**, then upload parameters to the PC/PG.
   (If you are performing a reset after replacing the device with a different instrument, do not upload parameters to the PC/PG.)

To reset the PROFIBUS address to 126:

1. Open the menu **Device – Master Reset**, and click **Reset Address to '126'**.
2. Click **OK**.
   The address will be reset to 126, and if the address lock was on, it will be disabled.

Process variables

Process variables

To compare outputs in real time open the menu **View – Process Variables** and click on **Overview** to see reading (level, space, distance); analog output; device status; and current electronics temperature.

To see highest and lowest electronics temperatures, navigate to **Level Meter > Maintenance and Diagnostics > Electronics Temperature**.

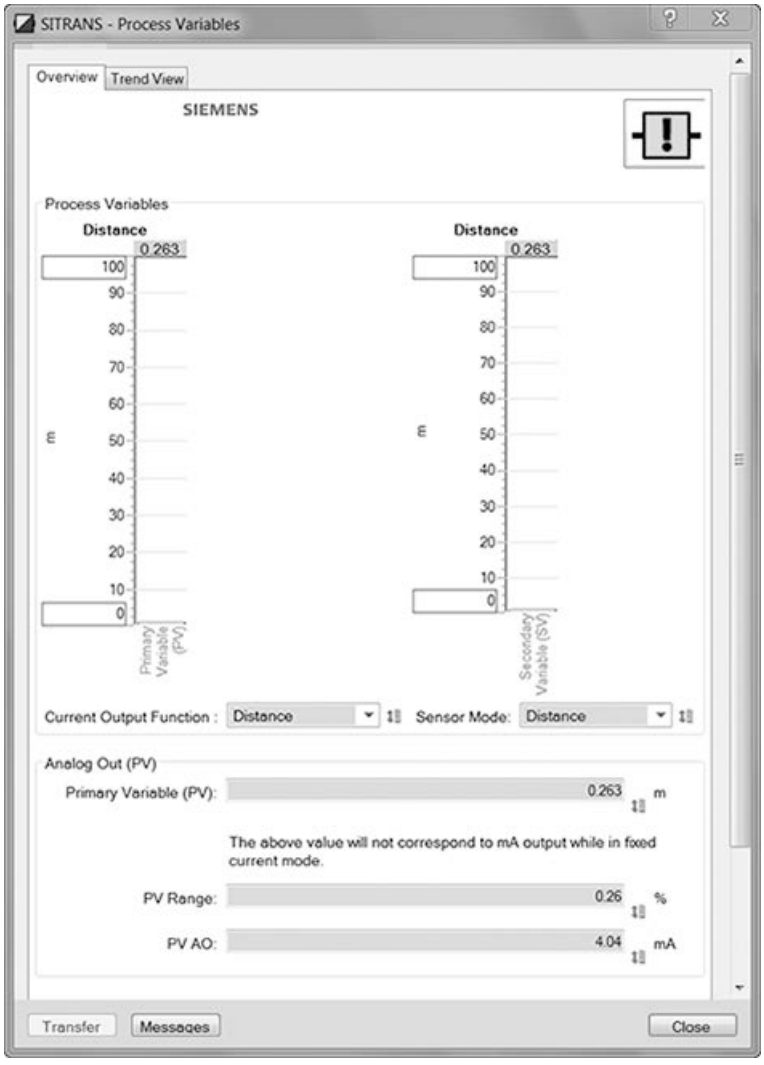

Function Blocks

Open the menu **View – Process Variables** and click on **Function Blocks** to view the channel (level or distance), operating mode (Auto, Manual, or Out of Service), quality, status, simulation setting, and summary of alarms.

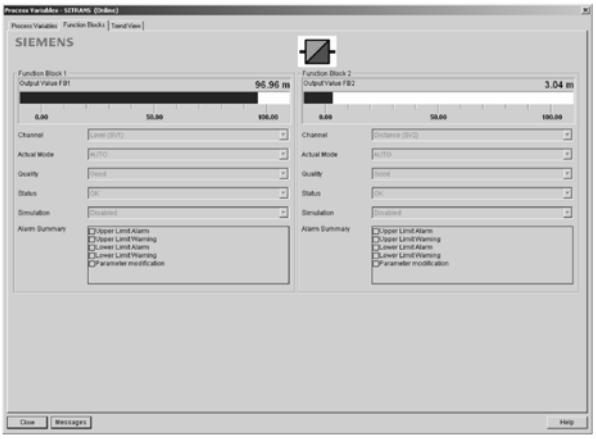

Trend View

Open the menu **View – Process Variables** and click on **Trend View** to monitor Sensor Value and values for AIFB1 and AIFB2.

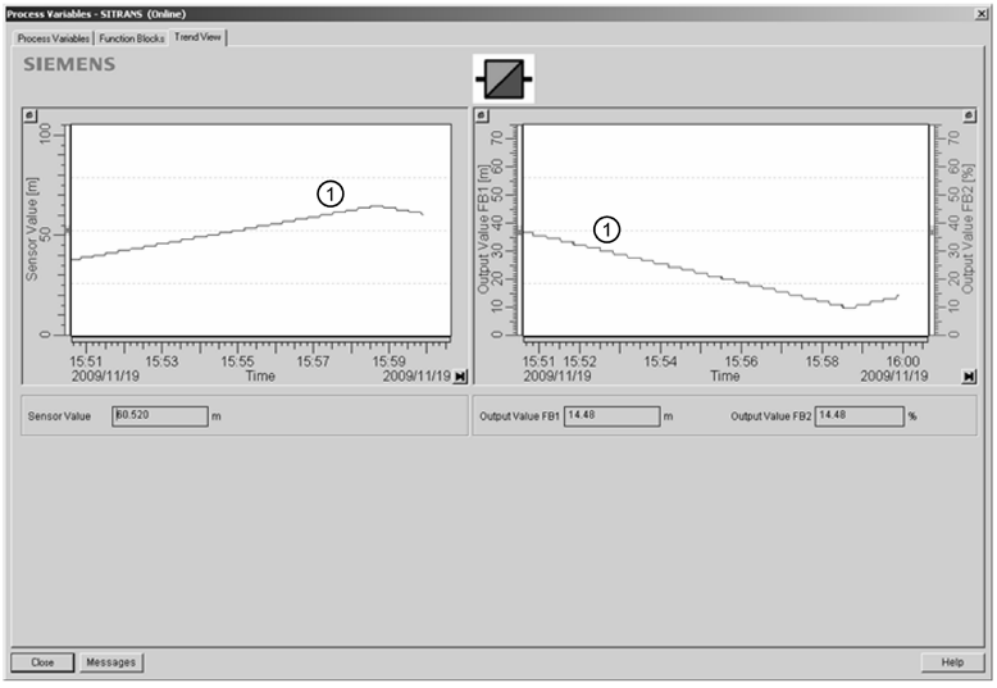

① Trend line

Diagnostics

Device status

Open the menu **View - Device Diagnostics** > **Device Status** to view Diagnostics, Device Status, Extended Diagnostics, and Maintenance

Diagnostics

In the Device Status window, click on the **Diagnostics** tab, then on **Update diagnostics** to update diagnostic information and refresh linked icons.

Status

Click on the **Device Status** tab to view peak sensor values, peak FB1 and FB2 values, and peak electronics temperatures.

Analog Input 1/Analog Input 2

Open the menu **View – Device Diagnostics** and go to **Analog Input 1/Analog Input 2**. Click on the tab **Overview** to see the status of all warnings and alarms. Click on the tab **Alarms and Warnings** for details.

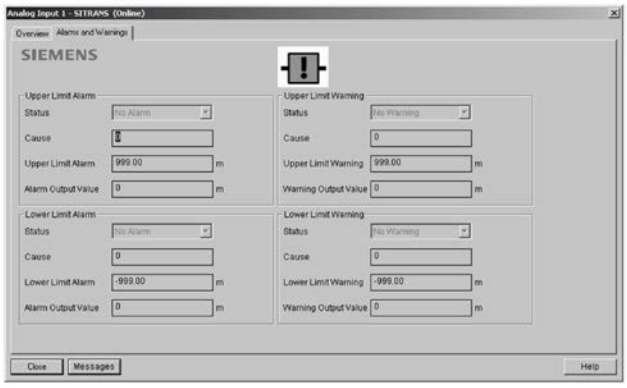

7.1.2 Operating via FDT (field device tool)

FDT is a standard used in several software packages designed to commission and maintain field devices such as SITRANS LR560. Two commercially available FDTs are PACTware and Fieldcare.

Functionally, FDT is very similar to PDM. See Operating via SIMATIC PDM (Page 53)

- To configure a field device via FDT, you need the DTM (Device Type Manager) for the device.
- To configure a field device via SIMATIC PDM, you need the EDD (Electronic Data Description) for the device.

Device Type Manager (DTM)

A DTM is a type of software that 'plugs into' FDT. It contains the same information as an EDD but an EDD is independent of the operating system.

SITRANS DTM

- SITRANS DTM is an EDDL interpreter developed by Siemens to interpret the EDD for that device.
- To use SITRANS DTM to connect to an instrument, you must first install SITRANS DTM on your system and then install the instrument EDD written for SITRANS DTM.
- You can download SITRANS DTM from the Siemens service and support website at: Services & Support (http://www.siemens.com/automation/service&support)
- Click on **Product Support**, then go to **Product Information** > **Automation Technology** > **Sensor systems** > **Process Instrumentation** > **Software & Communications**

The device EDD

The SITRANS LR560 HART and Profibus PA EDDs for SITRANS DTM can be downloaded from the product page of our website (www.siemens.com/LR560). Go to **Support** and click on **Software Downloads**.

Configuring a new device via FDT

The full process to configure a field device via FDT is outlined in an application guide which can be downloaded from the product page of our website (www.siemens.com/LR560). Go to **Support** and click on **Application Guides**.

Parameter Reference 8

Note

- Parameter names and menu structure are almost identical for SIMATIC PDM and the local display interface (LDI).
- To enter Program mode using the device buttons, press ▶. Press ◀ to return to Measurement mode.
- **Mode** toggles between **PROGRAM** and **Measurement** Modes via the handheld programmer.
- For Quick Access to parameters via the handheld programmer, press **Home**, then enter the menu number, for example: **2.2.1.**
- In Navigation mode**, ARROW keys (**◀ ▲ ▼ ▶**)** navigate the menu in the direction of the arrow.
- Press **RIGHT arrow** ▶ to open **Edit** Mode, or to save a modification.

Parameters are identified by name and organized into function groups. See HMI menu (Page 177) for a chart. For AMS Device Manager the structure varies slightly.

Parameters accessible via the handheld programmer are followed by the device menu number in parenthesis. Parameters not followed by a number are accessible only via remote operation.

For more details see:

- Operating via Operating via SIMATIC PDM (Page 53)
- Operating via Operating via FDT (field device tool) (Page 74)

8.1 QUICK START (1.)

Wizards provide step-by-step procedures to configure the device, filter out false echoes, and upload and download parameters and firmware to the optional display for easy configuration of multiple LR560s.

8.1.1 QUICK START WIZARD (1.1.)

The Quick Start wizard provides an easy step-by-step procedure to configure the device for a simple application.

From measurement screen, press RIGHT ▶ twice to open the Quick Start Wizard menu. Select a wizard, press RIGHT ▶ to open the first step, and follow the instructions.

Note

Do not use the Quick Start Wizard to modify individual parameters. Perform customization only after the Quick Start has been completed.

- See Quick Start Wizard via the local display push buttons (Page 42)
- See Quick Start Wizard via the handheld programmer (Page 48)
- See Quick Start wizard via SIMATIC PDM (Page 55)

8.1.2 AFES WIZARD (1.2.)

Note

Incorrect device settings

Before using AFES, configure the device via the Quick Start wizard.

If you have a vessel with known obstructions, we recommend using AFES to prevent false echo detection.

This feature can also be used if SITRANS LR560 displays a false high level, or the reading is fluctuating between the correct level and a false high level.

Make sure the material level is below all known obstructions.

1. Navigate to Level Meter >DIAGNOSTICS (3.) (Page 101)> ECHO PROFILE (3.1.) (Page 101).
2. Press RIGHT ▶ to request a profile.
3. Determine a range that includes the false echo but not the true echo: in the example, 3.3 m.

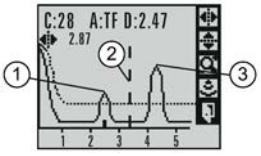

① false echo ② AFES range
③ true echo

4. Open the AFES wizard.
5. Press DOWN ▼ to continue and then RIGHT ▶ to edit Auto False Echo Suppression Range.

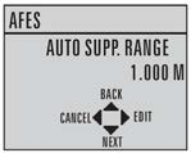

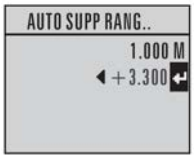

6. Enter the new range value and press RIGHT ▶ to transfer it. Press DOWN ▼ to initiate learn. A transition screen appears, followed by the message **Wizard Complete**.

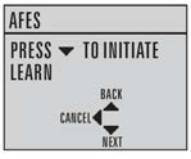

7. Press DOWN ▼ (Finish) to save AFES parameter changes and return to Program menu.
8. Press LEFT ◀ twice to return to Measurement mode.

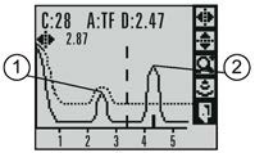

① false echo ② true echo

8.1.3 COPY PARAMETERS TO DISPLAY (1.3.)

Transfers parameter settings from a device to the local display interface.

See Connecting SITRANS LR560 (Page 32) for instructions on removing the local display interface.

1. Press RIGHT ▶ to edit.
2. Press DOWN ▼ to select Start and RIGHT ▶ to begin the transfer.

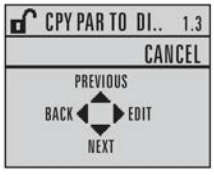

PARAM UPLOAD is displayed, then the device returns to Measurement mode.

8.1.4 COPY PARAMETERS FROM DISPLAY (1.4.)

Transfers parameter settings from the local display interface to a device.

1. Press RIGHT ▶ arrow to edit.
2. Press DOWN ▼ arrow to select Start and RIGHT ▶ arrow to begin the transfer.

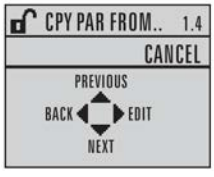

PARAM DOWNLOAD is displayed, then the device returns to Measurement mode.

8.1.5 COPY FIRMWARE TO DISPLAY (1.5.)

Transfers firmware from a device to the local display interface.

1. Press RIGHT ▶ to edit.
2. Press DOWN ▼ to select Start and RIGHT ▶ to begin the transfer.

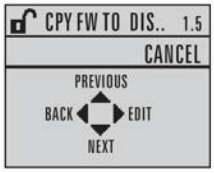

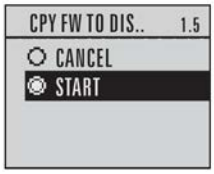

SW UPLOAD is displayed, then the device returns to Measurement mode.

8.1.6 COPY FIRMWARE FROM DISPLAY (1.6.)

Note

Incomplete transfer

Do not interrupt power supply during transfer.

Transfers firmware from the local display interface to a device.

1. Press RIGHT ▶ to edit.
2. Press DOWN ▼ to select Start and RIGHT ▶ to begin the transfer.

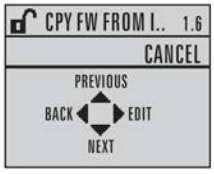

SW DOWNLOAD is displayed, then the device returns to Measurement mode.

8.2 SETUP (2.)

Note

Handheld programmer

Values shown in the following tables can be entered via handheld programmer.

8.2.1 IDENTIFICATION (2.1)

8.2.1.1 TAG (2.1.1.)

Text that can be used in any way. A recommended use is as a unique label for a field device in a plant. Limited to 8 ASCII characters. Read only on device, Read/Write using SIMATIC PDM and AMS.

8.2.1.2 DESCRIPTOR (2.1.2.)

Text that can be used in any way. Limited to 16 ASCII characters. No specific recommended use. Read only on device, Read/Write using SIMATIC PDM and AMS.

8.2.1.3 MESSAGE (2.1.3.)

Text that can be used in any way. Limited to 32 ASCII characters. No specific recommended use. Read only on device, Read/Write using SIMATIC PDM and AMS.

8.2.1.4 INSTALLATION DATE (2.1.4.)

Date the device was first commissioned. Read only locally. Can be written via HART (dd mm yyyy).

8.2.2 DEVICE (2.2.)

8.2.2.1 HARDWARE REVISION (2.2.1.)

Read only. Corresponds to the electronics hardware of the device.

8.2.2.2 FIRMWARE REVISION (2.2.2.)

Read only. Corresponds to the firmware that is embedded in the device.

8.2.2.3 LOADER REVISION (2.2.3.)

Read only. Corresponds to the software used to update the device.

8.2.2.4 MENU TIMEOUT (2.2.4.)

Factory setting:	120 s
Setting range:	15 to 65535 s
Purpose:	Time menu stays visible before switching back to Measurement view if no key is pressed.

8.2.2.5 MANUFACTURE DATE (2.2.5.)

The date of manufacture of the device (dd mm yyyy).

8.2.3 SENSOR (2.3.)

8.2.3.1 UNIT (2.3.1.)

Factory setting:	m
Setting range:	m, cm, mm, ft, in, %
Purpose:	PV (Primary Value) and SV (Secondary Sensor measurement units). Used in setting High/Low Calibration Point, and displayed on LCD and in PDM.
Description:	Changing units to % will update the mA setpoints.

8.2.3.2 LEVEL UNIT (2.3.2.)

The engineering unit used for Level. High Level Point corresponds to High Calibration Point and Low Level Point corresponds to Low Calibration Point.

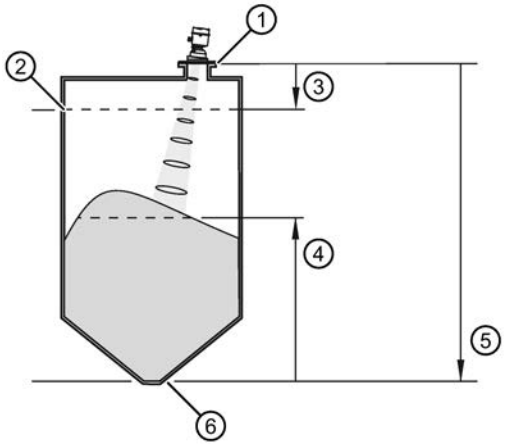

①	Sensor reference point[1)] (flange face)	②	High level point (default: 100%)
③	High calibration point	④	Level
⑤	Low calibration point	⑥	Low level point (default 0%)

[1)] The point on the sensor from which measurements are referenced (see Dimension drawings (Page 139)) .

Options		m, cm, mm, ft, in,%
	*	%

8.2.3.3 LOE TIMER (2.3.3.)

Note

When a loss of echo occurs, VALUE (2.5.9.2.) (Page 99) determines the material level to be reported when the fail-safe timer expires.

Factory setting:	100 s
Setting range:	0.00 to 7200 seconds
Purpose:	Sets the reaction speed of the device to measurement changes.

8.2.3.4 TEMP UNITS (2.3.4.)

Factory setting:	Degrees C
Setting range:	Degrees C, F, R, or K
Purpose:	Selects the engineering unit to be displayed with the value representing temperature.

8.2.3.5 CALIBRATION (2.3.5.)

LOW CALIBRATION POINT (2.3.5.1.)

Factory setting:	40.000 m or 100.000 m
Setting range:	0.000 to 40.000 m or 0.000 to 100.000 m.
Purpose:	Distance from sensor reference point[1)] to Low Calibration Point. Units are defined in UNIT (2.3.1.) (Page 82) and displayed on the LCD and in PDM.
Description:	Any change to Low Calibration Point will cause the mA setpoints to be updated.
Related parameters:	UNIT (2.3.1.) (Page 82) FAR RANGE (2.4.2.) (Page 87)

[1)] The point from which level measurement is referenced.

HIGH CALIBRATION POINT (2.3.5.2.)

Factory setting:	0.000 m
Setting range:	0.000 to 40.000 m or 0.000 to 100.000 m.
Purpose:	Distance from sensor reference point[1)] to High Calibration Point. Units are defined in UNIT (2.3.1.) (Page 82)
Description:	When setting the High Calibration Point value, note that echoes are ignored within NEAR RANGE (2.4.1.) (Page 87). Any change to High Calibration Point will cause the mA setpoints to be updated.
Related parameters:	NEAR RANGE (2.4.1.) (Page 87) UNIT (2.3.1.) (Page 82)

[1)] The point from which level measurement is referenced.

SENSOR OFFSET (2.3.5.3.)

Factory setting:	0.00 m
Setting range:	-100 to 100 m
Purpose:	A constant offset that can be added to or subtracted from the sensor value[1)] to compensate for a shifted sensor reference point. For example, when adding a thicker gasket or reducing the standoff/nozzle height. The units are defined in UNIT (2.3.1.) (Page 82).

[1)] The value produced by the echo processing which represents the distance from sensor reference point to the target.

LOW LEVEL POINT (2.3.5.4.)

The level when the material is at Low Calibration Point. The unit is defined in LEVEL UNIT (2.3.2.) (Page 83).

Values	Range: -999999 to 999999 Default: 0%

HI LEVEL POINT (2.3.5.5.)

The level when the material is at High Calibration Point. The unit is defined in LEVEL UNIT (2.3.2.) (Page 83).

Values	Range: -999999 to 999999 Default: 100%

LEVEL OFFSET (2.3.5.6.)

A constant offset that can be added to Level. The unit is defined in LEVEL UNIT (2.3.2.) (Page 83).

Values	Range: -999999 to 999999 Default: 0%

8.2.3.6 RATE (2.3.6.)

RESPONSE RATE (2.3.6.1.)

Changing Response Rate resets

FILL RATE/MIN (2.3.6.2.) (Page 86)
EMPTY RATE/MIN (2.3.6.3.) (Page 86)
FILTER TIME CONSTANT (2.5.8.1.) (Page 97)

Factory setting:	Medium			
Setting range:	Response rate	FILL RATE/MIN (2.3.6.2.) (Page 86)/EMPTY RATE/MIN (2.3.6.3.) (Page 86)	FILTER TIME CONSTANT (2.5.8.1.) (Page 97)	AVERAGE AMOUNT (2.8.3.) (Page 100)
	Slow	0.1 m/min (0.32 ft/min)	600 s	0.9
	Medium	1.0 m/min (3.28 ft/min)	60 s	0.75
	Fast	10.0 m/min (32.8 ft/min)	0 s	0.75[a)]
Purpose:	Sets the reaction speed of the device to measurement changes.			
Description:	Use a setting just faster than the maximum filling or emptying rate (whichever is faster).			
Related parameters:	FILL RATE/MIN (2.3.6.2.) (Page 86) EMPTY RATE/MIN (2.3.6.3.) (Page 86) FILTER TIME CONSTANT (2.5.8.1.) (Page 97) AVERAGE AMOUNT (2.8.3.) (Page 100)			

[a)] It may be necessary to reduce this further for FAST applications.

- Use a setting just faster than the maximum filling or emptying rate (whichever is faster).
- For the measurement value update time, see "Update time" in Performance (Page 134).

FILL RATE/MIN (2.3.6.2.)

Factory setting:	Medium	
Setting range:	0 to 999 999 m / min.(when using AMS, max. value is 99 999 m/min.)	
	RESPONSE RATE (2.3.6.1.) (Page 85)	Fill rate/min
	Slow	0.1 m/min (0.32 ft/min)
	Medium	1.0 m/min (3.28 ft/min)
	Fast	10.0 m/min (32.8 ft/min)
Purpose:	Defines the maximum rate at which the reported sensor value[1)] is allowed to increase. Allows you to adjust the SITRANS LR560 response to increases in the actual material level. Fill Rate is automatically updated whenever Response Rate is altered.	
Description:	Enter a value slightly greater than the maximum vessel-filling rate, in units per minute.	
Altered by:	RESPONSE RATE (2.3.6.1.) (Page 85)	
Related parameters:	LEVEL UNIT (2.3.2.) (Page 83)	

1) Sensor value is the value produced by the echo processing which represents the distance from sensor reference point to the target.

Note

The selected rate will also impact the AVERAGE AMOUNT (2.8.3.) (Page 100) parameter. For example, a SLOW setting will change it to 0.9, and a FAST setting may require it to be reduced to a very low value.

EMPTY RATE/MIN (2.3.6.3.)

Factory setting:	Medium	
Setting range:	Slow	0.1 m/min (0.32 ft/min)
	Medium	1.0 m/min (3.28 ft/min)
	Fast	10.0 m/min (32.8 ft/min)
Purpose:	Defines the maximum rate at which the reported sensor value[1)] is allowed to decrease. Adjusts the SITRANS LR560 response to decreases in the actual material level. Empty Rate is automatically updated whenever RESPONSE RATE (2.3.6.1.) (Page 85) is altered.	
Description:	Enter a value slightly greater than the vessel's maximum emptying rate, in units per minute.	
Altered by:	RESPONSE RATE (2.3.6.1.) (Page 85)	
Related parameters:	LEVEL UNIT (2.3.2.) (Page 83)	

1) Sensor value is the value produced by the echo processing which represents the distance from sensor reference point to the target. See Sensor Mode (2.2.2.).

Note

The selected rate will also impact the AVERAGE AMOUNT (2.8.3.) (Page 100) parameter. For example, a SLOW setting will change it to 0.9, and a FAST setting may require it to be reduced to a very low value.

8.2.4 SIGNAL PROCESSING (2.4.)

8.2.4.1 NEAR RANGE (2.4.1.)

Factory setting:	0.278 m (0.91 ft)
Setting range:	0 to 45 m (0 to 131.2 ft) for 40 m device 0 to 105 m (0 to 344.5 ft) for 100 m device
Purpose:	The range in front of the device (measured from the sensor reference point) within which any echoes will be ignored. This is sometimes referred to as blanking or a dead zone.
Related parameters:	UNIT (2.3.1.) (Page 82)

8.2.4.2 FAR RANGE (2.4.2.)

Note

Far Range can extend beyond the bottom of the vessel.

Factory setting:	Value for Low Calibration Pt. + 5 m (16.4 ft)
Setting range:	Min. = Low Cal. Pt. Max. = 40 m device: 45 m (131.2 ft), 100 m device: 105 m (344.5 ft)
Purpose:	Allows the material level to drop below Low Calibration Point without generating a Loss of Echo (LOE) state, see LOW CALIBRATION POINT (2.3.5.1.) (Page 84).
Description:	Use this feature if the measured surface can drop below the Low Cal. Point in normal operation.
Related parameters:	UNIT (2.3.1.) (Page 82) CLEF RANGE (2.4.5.4.) (Page 89)

8.2.4.3 MINIMUM SENSOR VALUE (2.4.3.)

Read only. Defines the minimum usable value for the measuring range, in units defined in UNIT (2.3.1.) (Page 82)*. (Default = 0.0 m)*

1. Open the menu **Diagnostics - Device Diagnostics** > **Device Status,** and click on the **Device** tab.
2. Check **Sensor Peak Values**.

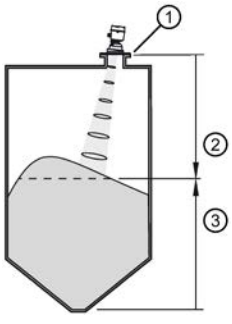

① sensor reference point (flange face)

② sensor value (distance from sensor reference point to target)

③ level

8.2.4.4 MAXIMUM SENSOR VALUE (2.4.4.)

Read only. Defines the maximum usable value for the measuring range, in units defined in UNIT (2.3.1.) (Page 82)*. Default depends on device: 40 m device default = 45.0 m; 100 m device default = 105 m.*

1. Open the menu **View - Device Diagnostics** > **Device Status,** and click on the **Device** tab.
2. Check **Sensor Peak Values**.

8.2.4.5 ECHO SELECT (2.4.5.)

ALGORITHM (2.4.5.1.)

Factory setting:	F: First Echo	
Setting range:	ALF	Area Largest First
	A	Echo Area
	L	Largest Echo
	F	First Echo
	AL	Echo Area Largest
	AF	Echo Area First
	LF	Echo Largest First
	BLF	Best of First and Largest echo
	BL	Best Largest Echo
	BF	Best First Echo
	LAST	Last
	TF	True First Echo
Purpose:	Selects the algorithm to be applied to the echo profile to extract the true echo.	

POSITION DETECT (2.4.5.2.)

Note

Vessel type

Selecting Steel or Concrete vessel type in the Quick Start wizard changes the setting for **Position Detect** to Rising Edge.

Factory setting:	RISING
Setting range:	RISING (yields highest stability on sloped targets)
	CENTER (yields higher accuracy on flat, non-sloped targets)
	HYBRID (CENTER and CLEF)
	CLEF (Constrained Leading Edge Fit)
Purpose:	Defines where on the echo the distance measurement is determined.
Description:	If the vessel bottom is being reported as the level instead of the actual material level (at low conditions), we recommend setting Position to Hybrid and using it in combination with CLEF Range.
Related parameters:	CLEF RANGE (2.4.5.4.) (Page 89)

ECHO THRESHOLD (2.4.5.3.)

Factory setting:	5
Setting range:	0 to 99
Purpose:	Sets the minimum echo confidence that the echo must meet in order to prevent a Loss of Echo condition and the expiration of the Fail-safe (LOE) timer. When CONFIDENCE (2.4.7.1.) (Page 91) exceeds **Echo Threshold**, the echo is accepted as a valid echo and is evaluated.
Description:	Use this feature when an incorrect material level is reported.
Related parameters:	LOE TIMER (2.3.3.) (Page 83)

CLEF RANGE (2.4.5.4.)

Note

CLEF range

- CLEF Range is referenced from Far Range.
- The value for CLEF Range must include the difference between Far Range and Low Calibration Point, plus any level above the Low Calibration Point to be managed by the CLEF algorithm.

Factory setting:	0.00 m
Setting range:	40 m device: 0 to 45 m 100 m device: 1 to 105 m
Purpose:	The CLEF algorithm is used mainly to allow correct level reporting for low dK materials which may otherwise cause an incorrect reading in an empty or almost empty vessel. It is used from Far Range up to the level defined by CLEF Range (see illustration below). Above that point, the Center algorithm is used.
Related parameters:	POSITION DETECT (2.4.5.2.) (Page 88) FAR RANGE (2.4.2.) (Page 87)

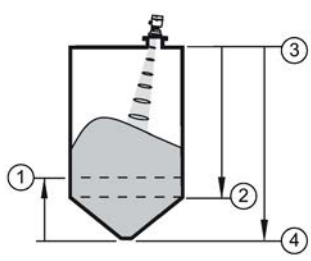

① CLEF Range ② Low calibration point
③ Sensor reference point ④ Far range

ECHO MARKER (2.4.5.5.)

Factory setting:	70%
Setting range:	5 to 95%
Purpose:	The point on the selected echo from which the measured value is taken.
Description:	Use this feature if the reported material level fluctuates slightly due to a variable rise in the leading edge of the true echo on the Echo Profile. Enter the value (in percent of echo height) to ensure the Echo Lock window intersects the Echo Profile at the sharpest rising portion of the Echo Profile representing the true echo. This value is preset to 70%.

8.2.4.6 SAMPLING (2.4.6.)

Provides a method of checking the reliability of a new echo before accepting it as the valid reading, based on numbers of samples above or below the currently selected echo.

8.2.4.7 ECHO LOCK (2.4.6.1.)

Factory setting:	Material Agitator
Setting range:	Lock Off
	Maximum Verification (not recommended for radar)
	Material Agitator
	Total Lock (not recommended for radar)
Purpose:	Selects the measurement verification process.
Related parameters:	FILL RATE/MIN (2.3.6.2.) (Page 86) EMPTY RATE/MIN (2.3.6.3.) (Page 86) UP SAMPLING (2.4.6.2.) (Page 90) DOWN SAMPLING (2.4.6.3.) (Page 90)

8.2.4.8 UP SAMPLING (2.4.6.2.)

Factory setting:	5
Setting range:	1 to 50
Purpose:	Specifies the number of consecutive echoes that must appear above the echo currently selected, before the measurement is accepted as valid.

8.2.4.9 DOWN SAMPLING (2.4.6.3.)

Factory setting:	2
Setting range:	1 to 50
Purpose:	Specifies the number of consecutive echoes that must appear below the echo currently selected, before the measurement is accepted as valid.

8.2.4.10 ECHO LOCK WINDOW (2.4.6.4.)

Factory setting:	0 m
Setting range:	40 m device: 0 to 45 m, 100 m device: 0 to 105 m
Purpose:	A “distance window” centered on the echo is used to derive the reading. When a new measurement is in the window, the window is re-centered and the reading is calculated.
Description:	When the value is 0, the window is automatically calculated after each measurement. • For slower Measurement Response values, the window grows at a slower rate. • For faster Measurement Response values, the window grows at a faster rate.

Note

Values in Echo Lock window

The Echo Lock window is stored as a standard sample, but displayed in sensor units. Any value entered for the Echo Lock window will be rounded to the nearest sample.

8.2.4.11 ECHO QUALITY (2.4.7.)

CONFIDENCE (2.4.7.1.)

Setting range (view only):	0 to 99	
	----	Shot not used
Purpose:	Indicates echo reliability: higher values represent better echo quality. The display shows the echo confidence of the last measurement. ECHO THRESHOLD (2.4.5.3.) (Page 89) defines the minimum criterion for echo confidence.	

ECHO STRENGTH (2.4.7.2.)

Setting range (view only):	–20 to 99
Purpose:	Displays the absolute strength (in dB above 1 µV rms) of the echo selected as the measurement echo.

8.2.4.12 TVT SETUP (2.4.8.)

AUTO ECHO SUPPRESSION (2.4.8.1.)

Note

AFES wizard

We recommend setting Auto False Echo Suppression either via SIMATIC PDM or via local operation using the Auto False Echo Suppression wizard.

Used together with AUTO SUPPRESSION RANGE (2.4.8.2.) (Page 92) to screen out false echoes in a vessel with known obstructions. A 'learned TVT' (time varying threshold) replaces the default TVT over a specified range.

- See Auto False Echo Suppression under CLEF RANGE (2.4.5.4.) (Page 151) for a more detailed explanation.
- To set via SIMATIC PDM, see Auto false echo suppression (Page 63)
- To set via local operation, see AFES WIZARD (1.2.) (Page 77)

AUTO SUPPRESSION RANGE (2.4.8.2.)

Factory setting:	1.00 m
Setting range:	0.00 to 45.00 m (or 105.00 m depending on model)
Purpose:	Defines the endpoint of the Learned TVT distance. Units are defined in UNIT (2.3.1.) (Page 82).
Description:	Used in combination with AUTO ECHO SUPPRESSION (2.4.8.1.) (Page 92).

HOVER LEVEL (2.4.8.3.)

Note

Changes take effect only at the next measurement.

Factory setting:	40%
Setting range:	0 to 100%
Purpose:	Defines how high the TVT (Time Varying Threshold) is placed above the noise floor of the echo profile, as a percentage of the difference between the peak of the largest echo in the profile and the noise floor.
Description:	When the device is located in the center of the vessel, the TVT hover level may be lowered to increase the confidence level of the largest echo.

SHAPER MODE (2.4.8.4.)

Factory setting:	OFF
Setting range:	ON, OFF
Purpose:	Enables/disables the TVT shaper.

8.2.4.13 TVT SHAPER (2.4.9.)

Note

- SHAPER MODE (2.4.8.4.) (Page 93) must be turned ON in order for TVT shaper points to be transferred
- We recommend using SIMATIC PDM to access this feature

Factory setting:	0 dB	
Setting range:	–50 to 50 dB	
Purpose:	Adjusts the TVT (Time Varying Threshold) at a specified range (breakpoint on the TVT). This allows you to reshape the TVT to avoid unwanted echoes. There are 120 breakpoints.	
Description:	**To use TVT shaper via SIMATIC PDM:** Open the menu **Device** – **Echo Profile Utilities** and click on **TVT Shaper**. For more detail see TVT Shaper (Page 62). **To use TVT shaper via LDI (local display interface):** 1. Go to SHAPER MODE (2.4.8.4.) (Page 93) and select **On**. 2. In TVT Shaper, go to Breakpoint 1-9 (2.4.9.1.) 3. Open Breakpoint 1 and enter the TVT Offset value (between –50 and 50). 4. Go to the next breakpoint and repeat step 3. until all desired breakpoint values have been entered.	
Breakpoint parameter references:	2.4.9.1.	Breakpoint 1-9
	2.4.9.2.	Breakpoint 10-18
	2.4.9.3.	Breakpoint 19-27
	2.4.9.4.	Breakpoint 28-36
	2.4.9.5.	Breakpoint 37-45
	2.4.9.6.	Breakpoint 46-54
	2.4.9.7.	Breakpoint 55-63
	2.4.9.8.	Breakpoint 64-72
	2.4.9.9.	Breakpoint 73-81
	2.4.9.10.	Breakpoint 82-90
	2.4.9.11.	Breakpoint 91-99
	2.4.9.12.	Breakpoint 100-108
	2.4.9.13.	Breakpoint 109-117
	2.4.9.14.	Breakpoint 118-120

8.2.5 AIFB1

8.2.5.1 STATIC REVISION NO. (2.5.1.)

Purpose:	The revision level of the static data associated with Analog Input Function Block 1.
Description:	The Static Revision No. is updated whenever a configuration parameter is changed.

8.2.5.2 MODE (2.5.2.)

Note

Ensure that Mode is returned to **AUTO** when simulation or maintenance are completed..

Factory setting:	O/S		
Setting range:	**Setting**	**Description**	**Output value**
	AUTO	automatic	the automatically-recorded measured value
	MAN	manual	a manually-set fixed simulation value
	O/S	function block disabled	the preset safety value
Purpose:	Used to request an operating mode from the Analog Input Function Block. Allows you to put SITRANS LR560 into Manual mode (used in conjunction with Simulation) or Out-of-Service mode for maintenance purposes.		

We recommend using this parameter only with SIMATIC PDM in order to benefit from all the features available.

For a detailed explanation, see Analog Input Function Block function groups (simulation, mode and status) (Page 161).

To use Mode via PDM see Simulation (Page 68).

8.2.5.3 CHANNEL (2.5.3.)

Factory setting:	Distance	
Setting range:	**Options**	**Reference point**
	Level/Volume (PV - Primary Value). Note: Volume is a standard option, but not supported by LR560.	Low Calibration Point
	Level (SV1 - Secondary Value 1)	Low Calibration Point
	Distance (SV2 - Secondary Value 2)	Sensor Reference Point
Purpose:	Used to select the Transducer Block output.	

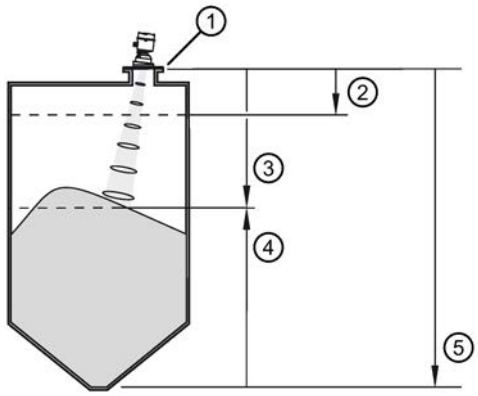

① Sensor reference point
② High calibration point (process full level)
③ Distance (SV2)
④ Level (SV1)
⑤ Low calibration point (process empty level)

8.2.5.4 LABEL (2.5.4.)

User defined label

8.2.5.5 INPUT SCALING (2.5.5.)

UPPER VALUE (2.5.5.1.)

Factory setting:	100%
Setting range:	Range: -999999 to 999999
Purpose:	Defines the operational upper range value of the input value (Process Value Scale) in PV (volume/level) Units. Process Value Scale normalizes the input value to a customer-defined range.

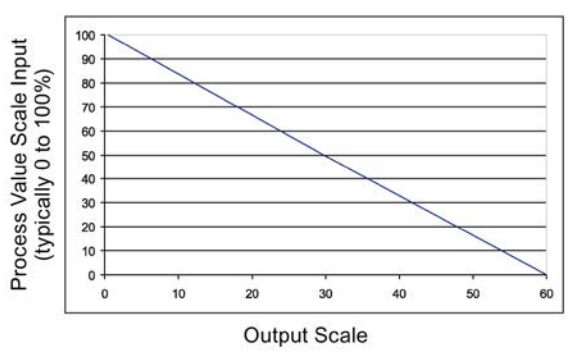

LOWER VALUE (2.5.5.2.)

Factory setting:	0%
Setting range:	Range: -999999 to 999999
Purpose:	Defines the operational lower range value of the input value (Process Value Scale) in PV (volume/level) Units. Process Value Scale normalizes the input value to a customer-defined range.

8.2.5.6 OUTPUT SCALING (2.5.6.)

Scales the Process Variable. The function block parameter OUT SCALE contains the values of the lower limit and upper limit effective range in AIFB1 units.

UPPER VALUE (2.5.6.1.)

Factory setting:	100%
Setting range:	Range: -999999 to 999999
Purpose:	Defines the operational upper range value of the output value in AIFB1 units.

LOWER VALUE (2.5.6.2.)

Factory setting:	0%
Setting range:	Range: -999999 to 999999
Purpose:	Defines the operational lower range value of the output value in AIFB1 units.

8.2.5.7 ALARMS AND WARNINGS (2.5.7.)

HI LIMIT ALARM (2.5.7.1.)

Factory setting:	999
Setting range:	Range: -999999 to 999999
Purpose:	The setting for the upper alarm limit in AIFB1 units.

HI LIMIT WARNING (2.5.7.2.)

Factory setting:	999
Setting range:	Range: -999999 to 999999
Purpose:	The setting for the upper warning limit in AIFB1 units.

LO LIMIT WARNING (2.5.7.3.)

Factory setting:	-999
Setting range:	Range: -999999 to 999999
Purpose:	The setting for the lower warning limit in AIFB1 units.

LO LIMIT ALARM (2.5.7.4.)

Factory setting:	-999
Setting range:	Range: -999999 to 999999
Purpose:	The setting for the lower alarm limit in AIFB1 units.

LIMIT HYSTERESIS (2.5.7.5.)

Factory setting:	0.20 for 40 m version 0.50 for 100 m version
Setting range:	Range: 0 to 999999.00
Purpose:	Hysteresis is used to adjust the sensitivity of the trigger for alarm messages. It is used to compensate when a process variable fluctuates around the same value as a limit. A high level alarm occurs when a value exceeds an upper limit. The alarm's status remains true until the value drops below the limit minus the alarm hysteresis. The directions are reversed for low limit detection.
Description:	Enter a value for the hysteresis here, to be used for all warnings and alarms. The units are the same as the Output scale, i.e. AIFB1 units.

8.2.5.8 DISPLAY (2.5.8.)

FILTER TIME CONSTANT (2.5.8.1.)

Factory setting:	60 s
Setting range:	Range: 0 to 1500 s
Purpose:	The time constant for the damping filter. The damping filter smooths out the response to a sudden change in level. This is an exponential filter and the engineering unit is always in seconds (see Damping (Page 154) for more details).

Note

For time constant values corresponding to response rate settings, see RESPONSE RATE (2.3.6.1.) (Page 85).

UNIT (2.5.8.2.)

Note

Additional units are available in SIMATIC PDM.

Factory setting:	m
Setting range [a]:	m, cm, mm, ft, in, %
Purpose:	Engineering unit to be displayed with the output value
Related Parameters:	OUT UNIT TEXT (2.5.8.3.) (Page 98)

[a] In PDM, 3 additional units are available: **Not Used, Unknown**, and **Special** (as permitted by PROFIBUS). In PDM the out unit text is displayed in the drop-down menu. On the display, the option is 'Follow out unit text'

OUT UNIT TEXT (2.5.8.3.)

If the desired unit is not listed in parameter UNIT (2.5.8.2.) (Page 98) you can define it in this parameter.

DECIMAL POINT (2.5.8.4.)

Factory setting:	2
Setting range:	Range: 0, 1, 2, 3, 4, 5, 6, 7
Purpose:	The number of digits to display after the decimal point. (The LCD is limited to displaying two decimal places in Measurement mode. In SIMATIC PDM, up to seven decimal places may be used to display measured values.)

8.2.5.9 FAIL-SAFE (2.5.9.)

MODE (2.5.9.1.)

Factory setting:	LAST VALUE	
Setting range:	SUB VALUE	Substitute value. VALUE (2.5.9.2.) (Page 99) used as output value.
	LAST VALUE	Last value. (Store last valid output value).
	USE BAD VALUE	Use bad value. (Calculated output value is incorrect).
Purpose:	Fail-safe Mode occurs if the status of the input value is bad, or if the device has been put into Fail-safe mode using Simulation. Mode defines the material level to be reported when the LOE (Loss of Echo) timer expires.	

VALUE (2.5.9.2.)

Note

FAIL-SAFE (2.5.9.) (Page 98) must be set to SUB VALUE before this parameter can be defined.

Factory setting:	0
Setting range:	Range: -999999 to 999999
Purpose:	User-defined default for the Output Value, if sensor or sensor electronic fault is detected. Units are defined in UNIT (2.5.8.2.) (Page 98).

8.2.6 AIFB2

See AIFB1 (Page 94): the parameters for AIFB2 are identical.

8.2.7 MEASURED VALUES (2.7.)

8.2.7.1 MEASURED VALUES (2.7.)

Purpose:	Read only. Allows you to view measured values for diagnostic purposes.	
Description:	To access measured values via **SIMATIC PDM**: • Open the menu **View** – **Process Variables**.	
Process variables:	MAIN OUTPUT (2.7.1.) (Page 99)	The value for Level/Volume, always displayed here in percent.
	OUTPUT NO LINEARIZATION (2.7.2.) (Page 99)	The value for Level, always displayed here in percent.
	OUTPUT NO OFFSETS (2.7.3.) (Page 99)	The value for distance, displayed in sensor units.

8.2.7.2 MAIN OUTPUT (2.7.1.)

The value for level/volume, always displayed here in percent.

8.2.7.3 OUTPUT NO LINEARIZATION (2.7.2.)

The value for level, always displayed here in percent.

8.2.7.4 OUTPUT NO OFFSETS (2.7.3.)

The value for distance, displayed in sensor units.

8.2.8 FILTERING (2.8.)

8.2.8.1 NARROW ECHO FILTER (2.8.1.)

Factory setting:	0 = OFF
Setting range:	0 to 255, greater = wider
Purpose:	Filters out echoes of a specific width.
Description:	To remove a false echo from the Echo Profile, take its width in mm and multiply it by 0.006. Enter the result. Example: to filter out a spike with 500 mm width, enter 6 or 7 (the closest integer product of 500 x 0.006). When a value is keyed in, the nearest acceptable value is entered.

8.2.8.2 REFORM ECHO (2.8.2.)

Factory setting:	0 = OFF
Setting range:	0 to 255 samples, greater = wider (recommended: 10 samples)
Purpose:	Smooths jagged peaks in the echo profile. Reforms fragmented echoes into one echo.

8.2.8.3 AVERAGE AMOUNT (2.8.3.)

Factory setting:	0.75
Setting range:	0.0 to 0.99
Purpose:	The fraction of the old shot data that is kept for averaging purposes. A higher value will give a smoother profile at the expense of a slower echo profile response.

8.3 DIAGNOSTICS (3.)

8.3.1 ECHO PROFILE (3.1.)

To request a profile via SIMATIC PDM:

Open the menu Device – Echo Profile Utilities. (See Echo profile (Page 61) for more detail.)

To request a profile via the handheld programmer:

Note

Selected icon is highlighted.

Navigate to this parameter and press RIGHT arrow. For more details, refer toRequesting an Echo Profile (Page 51).

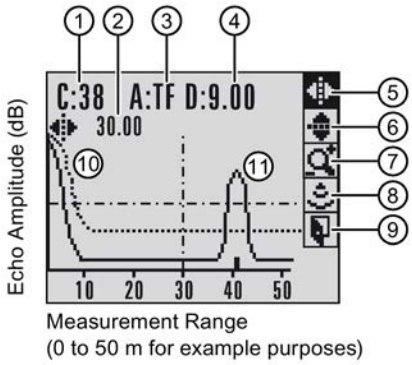

① confidence value

② distance from Low Calibration Point to vertical cross-hair

③ algorithm selection (trueFirst echo)

④ distance from flange face to target

⑤ pan left/right - selected/highlighted

⑥ pan up/down

⑦ zoom in/out

⑧ measure

⑨ exit

exit icon, deselected

exit icon selected /highlighted

8.3.2 FAULT RESET (3.2.)

Purpose:	Clears the following fault (**Acknowledge Fault**).	
Description:	Clearing a fault in one parameter of a "maintenance pair" automatically clears a fault in the second parameter of the pair. For example, entering S3 or S4 will clear a fault on Device (Maintenance Required), and on Device (Maintenance Demanded). This applies when clearing faults via the handheld programmer or 375 Field Communicator.	
	To clear a fault using the handheld programmer, enter the fault code number then press **RIGHT** arrow.	
	Internal Temperature High	
	To clear a fault via SIMATIC PDM: 1. Open the menu **Diagnostics** – **Device Diagnostics** and click on **Maintenance** tab. 2. Click on **Acknowledge Warnings** in the applicable box to clear the fault.	
Faults:	Device Lifetime Reminder 1	Maintenance Required
	Device Lifetime Reminder 2	Maintenance Demanded
	Sensor Lifetime Reminder 1	Maintenance Required
	Sensor Lifetime Reminder 2	Maintenance Demanded
	Service Schedule Reminder 1	Maintenance Required
	Service Schedule Reminder 2	Maintenance Demanded
	Calibration Schedule Reminder 1	Maintenance Required
	Calibration Schedule Reminder 2	Maintenance Demanded
	Internal Error	Maintenance Demanded

8.3.3 TREND (3.3.)

Displays the trend of the Process Variables: sensor value, and outputs from AIFB1/AIFB2. Samples are saved every minute up to 3200 samples. Once the maximum number is reached, saved data is overwritten from the beginning.

To view via SIMATIC PDM:

Open the menu **View – Process Variables** and click on the tab **Trend View.**

8.3.4 MINIMUM VALUE (3.4.1.)

Note

Read/write

Read only in PDM or AMS. Can be written via the handheld programmer.

Displays (in °C) the minimum temperature recorded by the internal electronics. The high and low values are maintained over a power cycle.

Via SIMATIC PDM navigate to **Maintenance and Diagnostics** > **Electronics Temperature**.

8.3.5 MAXIMUM VALUE (3.4.2.)

Note

Read/write

Read only in PDM or AMS. Can be written via the handheld programmer.

Displays (in °C) the maximum temperature recorded by the internal electronics. The high and low values are maintained over a power cycle.

Via SIMATIC PDM navigate to **Maintenance and Diagnostics** > **Electronics Temperature**.

8.3.6 INTERNAL TEMPERATURE (3.4.3.)

Read only. Displays (in °C) the current temperature on the circuit board recorded by the internal electronics.

For access via SIMATIC PDM open the menu **View** – **Process Variables** and check the field **Electronics Temperature**.

8.3.7 CONDENSED STATUS (3.5.)

When ENABLE (3.5.1.) (Page 103) is enabled, you can select the level of severity of errors, and tailor a device response appropriate for your particular process.

- In EVENT INDEX (3.6.1.) (Page 104), you can select a particular event or error by means of itsindex number.
- In EVENT STATUS (3.6.2.) (Page 105), you can assign a status to the selected event.
- In EVENT DIAGNOSIS (3.6.3.) (Page 106), you can assign a diagnosis to the selected event.

8.3.7.1 ENABLE (3.5.1.)

Note

When cyclic communication is in progress, Condensed Status Mode cannot be changed.

Factory setting:	YES	
Setting range:	NO	Disabled
	YES	Enabled
Description:	Select **Yes** or **No** to enable/disable Condensed Mode.	

8.3.7.2 FEATURE SUPPORTED (3.5.2.)

Read only. Features supported are:

- Condensed Diagnostics
- Extended Diagnostics
- Application Relationships

8.3.7.3 FEATURE ENABLED (3.5.3.)

Read only. Lists those features that have been enabled.

8.3.8 EVENT INDEX (3.6.1.)

Setting range:	Event Index	Event Code	Event Description [a)]
	0	S0	Loss of Echo
	2	S2	No Tech Power
	10	S10	Level Transducer Block (LTB) Scale
	11	S11	Internal Temperature Sensor
	12	S12	Internal Temperature High
	14	S14	AIFB1 PV Range
	15	S15	AIFB2 PV Range
	25	S25	Internal error
	28	S28	Memory RAM
	29	S29	Memory EEPROM
	30	S30	Memory EEPROM Flags
	31	S31	Memory Flash
	33	S33	Internal Temperature Calibration
	34	S34	Velocity Calibration
	35	S35	Receiver Init Calibration
	36	S36	Receiver Calibration
	37	S37	Technology Module Calibration
	38	S38	Technology Module Ramp
Purpose:	The numeric component of the Event Code for a Condensed Status event. Use the index number to identify a particular event in the list above.		

[a)] See General fault codes (Page 129) for the meaning of each event.

For example:

Event Code for Loss of Echo = S0
Event Index = 0

To select a particular event via the handheld programmer:

1. Go to ENABLE (3.5.1.) (Page 103) and select **Yes** to enable Condensed Mode.
2. Go to **Event Index (3.6.1.)** and enter the event index number corresponding to the event.

To select a particular event via SIMATIC PDM:

1. Go to **Maintenance & Diagnostics > Condensed Status > Enable** and select **Yes** to enable Condensed Mode.
2. Go to **Maintenance & Diagnostics > Allocation Level.**
3. For each event, you can select either the Status or the Diagnosis line, then choose a Status or Diagnosis option from the associated pull-down menu.

8.3.9 EVENT STATUS (3.6.2.)

Factory setting:	Bad: maintenance alarm
Setting range:	Good
	Good: maintenance required
	Good: maintenance demanded
	Uncertain: maintenance demanded
	Bad: maintenance alarm
	Uncertain: process related, no maintenance
	Bad: process related, no maintenance
	Bad: function check/local override
	Good: function check
Purpose:	Event Status allows you to assign one of the status options listed above, to anyof the events listed in EVENT INDEX (3.6.1.) (Page 104). This allows you to tailor a device response appropriate for your particular process. (Event Status affectsCondensed Status[1)]).

To assign a status to a particular event via the handheld programmer:

1. Go to ENABLE (3.5.1.) (Page 103) and select **Yes** to enable Condensed Mode.
2. Go to EVENT INDEX (3.6.1.) (Page 104) and enter the event index number corresponding to the event.
3. Go to Event Status (3.6.2) and choose a Status option from the table above.

To assign a status to a particular event via SIMATIC PDM:

1. Go to **Level Meter > Maintenance & Diagnostics > Condensed Status > Enable** and select **Yes** to enable Condensed Status Mode.
2. Go to **Level Meter > Maintenance & Diagnostics > Allocation Level.**
3. Select the Status line for the selected Event, then choose a Status option from the associated pull-down menu.

[1)] See Condensed status (Page 167) for more detail.

8.3.10 EVENT DIAGNOSIS (3.6.3.)

Factory setting:	Maintenance alarm
Setting range:	Status OK
	Maintenance required
	Maintenance demanded
	Maintenance alarm
	Invalid process conditions
	Function check or simulation
Purpose:	Allows you to assign one of the diagnostic options listed below to any of the events listed in EVENT INDEX (3.6.1.) (Page 104). This allows you to tailor a device response appropriate for your particular process.(Event Diagnosis affects Condensed Acyclic Diagnostics and Cyclic Extended Diagnostics[2)]).

To assign a diagnosis to a particular event via the handheld programmer:

1. Go to ENABLE (3.5.1.) (Page 103) and select **Yes** to enable Condensed Mode.
2. Go to EVENT INDEX (3.6.1.) (Page 104) and enter the event index number corresponding to the event.
3. Go to **Event Diagnosis (3.6.3)** and choose a Diagnosis option from the table above.

To assign a status to a particular event via SIMATIC PDM:

1. Go to **Level Meter > Maintenance & Diagnostics > Condensed Status > Enable** and select **Yes** to enable Condensed Status Mode.
2. Go to **Level Meter > Maintenance & Diagnostics > Allocation Level.**
3. Select the Diagnosis line for the selected Event, then choose a Diagnosis option from the associated pull-down menu.

[2)] See Condensed mode diagnosis (Page 171) for more detail.

8.3.11 PEAK VALUES (3.7.)

Description:	To view via **SIMATIC PDM**: • Open the menu View – Device Diagnostics, select Device Status, and click on the tab Device Status. For more details, see Diagnostics (Page 74).	
Peak value parameter references:	**3.7.1. Min. Measured Value**	The minimum recorded Sensor value, reported in units defined in UNIT (2.3.1.) (Page 82).
	3.7.2. Max. Measured Value	The maximum recorded Sensor value, reported in units defined in UNIT (2.3.1.) (Page 82).
	3.7.3. Minimum Output Value - AIFB1	The minimum recorded Output Value from the Analog Input Function Block 1.
	3.7.4. Maximum Output Value - AIFB1	The maximum recorded Output Value from the Analog Input Function Block 1.
	3.7.5 Minimum Output Value - AIFB2	The minimum recorded Output Value from the Analog Input Function Block 2.
	3.7.6. Maximum Output Value - AIFB2	The maximum recorded Output Value from the Analog Input Function Block 2.

8.3.12 MINIMUM MEASURED VALUE (3.7.1.)

The minimum recorded Sensor value, reported in units defined in UNIT (2.3.1.) (Page 82).

8.3.13 MAXIMUM MEASURED VALUE (3.7.2.)

The maximum recorded Sensor value, reported in units defined in UNIT (2.3.1.) (Page 82).

8.4 SERVICE (4.)

8.4.1 DEMO MODE (4.1.)

Factory setting:	OFF
Setting range:	ON or OFF
Purpose:	Used to set up for demonstrations: reduces the time between measurements and the accuracy for demonstration purposes.

8.4.2 MASTER RESET (4.2.)

Note

- Following a reset, some degree of reprogramming may be required, depending on the option chosen below.
- While performing any reset, a loss of communications can be expected.

Setting range:	Standard defaults	Resets all parameters, excluding device addresses and Language, to the PROFIBUS standard default settings. **NOTE:** After initiating a reset to Standard Defaults via the local user interface, allow 1-2 minutes before initiating a new command locally.
	Informational	Resets parameters such as Tag.
	Functional	Resets parameters that control device behavior and functionality(such as calibration points)
	Warm start	Has the same effect as recycling power to the device
	Reset Address to 126	• Resets the PROFIBUS device address to 126 • If the address lock was on, will disable the lock.
Purpose:	Resets all parameter to factory defaults, with certain exceptions. The list of exceptions includes, but is not limited to: • Message • Description • Installation Data • Device Address • Write Protection • Auto False Echo Suppression Range • Learned TVT • Language	
Description:	**To access via SIMATIC PDM:** Open the menu **Device – Master Reset.** **To perform a reset via the handheld programmer:** a) Press **RIGHT Arrow** to open Edit Mode then scroll down to the desired Reset option and press **RIGHT Arrow** to select it. b) Press **LEFT Arrow** to exit.	

8.4.3 POWERED HOURS (4.3.)

Read only unless WRITE PROTECT (6.2.1.) (Page 122) is set to Unlock (2457). Displays the number of hours the unit has been powered up since manufacture.

In SIMATIC PDM, open the menu **Device** – **Wear**.

8.4.4 POWERON RESETS (4.4.)

Read only unless WRITE PROTECT (6.2.1.) (Page 122) is set to Unlock (2457). The number of power cycles that have occurred since manufacture.

In SIMATIC PDM, open the menu **Device** > **Wear**.

8.4.5 LCD BACKLIGHT (4.5.)

Factory setting:	128 seconds
Setting range:	0 (backlight off) to 128 seconds (>120 means backlight always on)
Purpose:	Time the backlight remains on.

8.4.6 LCD CONTRAST (4.6.)

Factory setting:	8
Setting range:	0 to 20
Purpose:	The factory setting is for optimum visibility at room temperature and in average light conditions. Extremes of temperature will lessen the contrast.
Description:	Contrast setting will depend on ambient temperature. Adjust the value to improve visibility in different temperatures and light conditions. Change the value in small steps to ensure you can continue to read the display.

8.4.7 REMAINING DEVICE LIFETIME (4.7.)

Note

- Four sets of parameters allow you to monitor the Device/Sensor Lifetimes and set up Maintenance/Service schedules, based on operating hours instead of a calendar-based schedule, see REMAINING SENSOR LIFE (4.8.) (Page 112), SERVICE SCHEDULE (4.9.) (Page 115), and CALIBRATION SCHEDULE (4.10.) (Page 118).
- Performing a reset to Factory Defaults will reset all the Maintenance Schedule parameters to their factory defaults.
- The device operates in years. To view Remaining Device Lifetime parameters in hours or days (via SIMATIC PDM only) see LIFETIME EXPECTED (4.7.1.) (Page 110).

Factory setting:	years
Setting range[1]:	hours, days, years
Purpose:	The device tracks itself based on operating hours and monitors its predicted lifetime. You can modify the expected device lifetime, set up schedules for maintenance reminders, and acknowledge them.
Description:	The maintenance warnings and reminders are available through HART communications. This information can be integrated into an Asset Management system. For optimal use, we recommend that you use SIMATIC PCS7 Asset Management Software in conjunction with SIMATIC PDM. To access these parameters via SIMATIC PDM: 1. Open the menu **Device** – **Maintenance** and select the **Remaining Device Lifetime** tab. 2. After modifying values/units as required, click on **Write** to accept the change, and **Read** to view the effect of the change. 3. Click on **Snooze** to add a year to the **Total Expected Device Life**.

[1] Selectable only via SIMATIC PDM.

8.4.7.1 LIFETIME EXPECTED (4.7.1.)

Note

The device always operates in years. Changing the units affects only the parameter view of the Remaining Device Lifetime parameters in SIMATIC PDM.

Factory setting:	10.00 years
Setting range:	0 to 20 years
Purpose:	Allows you to override the factory default.
Description:	Units: hours, days, years, are selectable only via SIMATIC PDM.

8.4.7.2 TIME IN OPERATION (4.7.2.)

Read only. The amount of time the device has been operating.

8.4.7.3 REMAINING LIFETIME (4.7.3.)

Read only. LIFETIME EXPECTED (4.7.1.) (Page 110) less TIME IN OPERATION (4.7.2.) (Page 110).

8.4.7.4 REMINDER ACTIVATION (4.7.4.)

Factory setting:	OFF
Setting range:	Reminder 1 (Maintenance Required), Reminder 2 (Maintenance Demanded), Reminders 1 and 2, OFF
Purpose:	Allows you to enable a maintenance reminder.
Description:	To modify this parameter via SIMATIC PDM: • Go to menu **Device** – **Maintenance**.

8.4.7.5 REMINDER 1 (REQUIRED) (4.7.5.)

Factory setting:	0.164 years
Setting range:	0 to 20 years
Purpose:	If REMAINING LIFETIME (4.7.3.) (Page 111) is equal to or less than this value, the device generates a Maintenance Required reminder.
Description:	1) Modify values as required. 2) Set REMINDER ACTIVATION (4.7.4.) (Page 111).

8.4.7.6 REMINDER 2 (DEMANDED) (4.7.6.)

Factory setting:	0.019 years
Setting range:	0 to 20 years
Purpose:	If REMAINING LIFETIME (4.7.3.) (Page 111) is equal to or less than this value, the device generates a Maintenance Demanded reminder.
Description:	1) Modify values as required. 2) Set REMINDER ACTIVATION (4.7.4.) (Page 111).

8.4.7.7 MAINTENANCE STATUS (4.7.7.)

Indicates which level of maintenance reminder is active.

In SIMATIC PDM, open the menu **Diagnostics** > **Device Diagnostics**, click on the Maintenance tab, and check the Calibration Schedule Status window.

8.4.7.8 ACKNOWLEDGE STATUS (4.7.8.)

Indicates which level of maintenance reminder has been acknowledged.

In SIMATIC PDM, open the menu **Diagnostics** > **Device Diagnostics**, click on the Maintenance tab, and check the Calibration Schedule Status window.

8.4.7.9 ACKNOWLEDGE (4.7.9.)

Purpose:	Acknowledges the current maintenance reminder.
Description:	To acknowledge a reminder via SIMATIC PDM: • Open the menu **Diagnostics** > **Device Diagnostics** and click on the tab Maintenance. • In the Calibration Schedule section, click on Acknowledge Warnings. To acknowledge a reminder via the local control buttons or hand-held programmer: • Press **RIGHT** arrow twice to open parameter view and activate Edit Mode. • Press **RIGHT** arrow to acknowledge the reminder.

8.4.8 REMAINING SENSOR LIFETIME (4.8.)

8.4.8.1 REMAINING SENSOR LIFE (4.8.)

Note

- Four sets of parameters allow you to monitor the Device/Sensor Lifetimes and set up Maintenance/Service schedules, based on operating hours instead of a calendar-based schedule, see REMAINING DEVICE LIFETIME (4.7.) (Page 110), SERVICE SCHEDULE (4.9.) (Page 115), and CALIBRATION SCHEDULE (4.10.) (Page 118).
- Performing a reset to Factory Defaults will reset all the Maintenance Schedule parameters to their factory defaults.
- The device operates in years. To view Remaining Device Lifetime parameters in hours or days (via SIMATIC PDM only) see LIFETIME EXPECTED (4.8.1.) (Page 113).

Factory setting:	years
Setting range[1]:	hours, days, years
Purpose:	The device monitors the predicted lifetime of the sensor (the components exposed to the vessel environment). You can modify the expected sensor lifetime, set up schedules for maintenance reminders, and acknowledge them.
Description:	To access these parameters via SIMATIC PDM: 1. Open the menu **Device** – **Maintenance** and select the **Remaining Sensor Lifetime** tab. 2. After modifying values/units as required, click on **Write** to accept the change, and **Read** to view the effect of the change. 3. Click on **Snooze** to add a year to the **Total Expected Sensor Life**. 4. Click on **Sensor Replaced** to restart the timer and clear any fault messages.

[1] Selectable only via SIMATIC PDM.

8.4.8.2 LIFETIME EXPECTED (4.8.1.)

Note

The device always operates in years. Changing the units affects only the parameter view of the Remaining Sensor Lifetime parameters in SIMATIC PDM.

Factory setting:	10.00 years
Setting range:	0 to 20 years
Purpose:	Allows you to override the factory default.
Description:	Units: hours, days, years, are selectable only via SIMATIC PDM.

8.4.8.3 TIME IN OPERATION (4.8.2.)

Read only. The amount of time the sensor has been operating.

8.4.8.4 REMAINING LIFETIME (4.8.3.)

Read only. LIFETIME EXPECTED (4.8.1.) (Page 113) less TIME IN OPERATION (4.8.2.) (Page 113).

8.4.8.5 REMINDER ACTIVATION (4.8.4.)

Note

Access

To modify this parameter via SIMATIC PDM it must be accessed via the pull-down menu **Device** – **Maintenance**.

Factory setting:	OFF
Setting range:	Reminder 1 (Maintenance Required), Reminder 2 (Maintenance Demanded), Reminders 1 and 2, OFF
Purpose:	Allows you to enable a maintenance reminder.
Description:	1. First set the values in Reminder 1 (Required) (3.7.3.)/Reminder 2 (Demanded) (3.7.4.). 2. Select the desired Reminder Activation option.

8.4.8.6 REMINDER 1 (REQUIRED) (4.8.5.)

Factory setting:	0.164 years
Setting range:	0 to 20 years
Purpose:	If REMAINING LIFETIME (4.8.3.) (Page 113) is equal to or less than this value, the device generates a Maintenance Required reminder.
Description:	1. Modify values as required. 2. Set REMINDER ACTIVATION (4.8.4.) (Page 113) to the desired option.

8.4.8.7 REMINDER 2 (DEMANDED) (4.8.6.)

Factory setting:	0.019 years
Setting range:	0 to 20 years
Purpose:	If REMAINING LIFETIME (4.8.3.) (Page 113) is equal to or less than this value, the device generates a Maintenance Demanded reminder.
Description:	1. Modify values as required. 2. Set REMINDER ACTIVATION (4.8.4.) (Page 113) to the desired option.

8.4.8.8 MAINTENANCE STATUS (4.8.7.)

Indicates which level of maintenance reminder is active.

In SIMATIC PDM, open the menu **Diagnostics** > **Device Diagnostics**, click on the Maintenance tab, and check the Calibration Schedule Status window.

8.4.8.9 ACKNOWLEDGE STATUS (4.8.8.)

Indicates which level of maintenance reminder has been acknowledged.

In SIMATIC PDM, open the menu **Diagnostics** > **Device Diagnostics**, click on the Maintenance tab, and check the Calibration Schedule Status window.

8.4.8.10 ACKNOWLEDGE (4.8.9.)

Purpose:	Acknowledges the current maintenance reminder.
Description:	To acknowledge a reminder via SIMATIC PDM: • Open the menu **Diagnostics** > **Device Diagnostics** and click on the tab Maintenance. • In the Calibration Schedule section, click on Acknowledge Warnings. To acknowledge a reminder via the local control buttons or hand-held programmer: • Press **RIGHT** arrow twice to open parameter view and activate Edit Mode. • Press **RIGHT** arrow to acknowledge the reminder.

8.4.9 SERVICE SCHEDULE (4.9.)

8.4.9.1 SERVICE SCHEDULE (4.9.)

Note

- Four sets of parameters allow you to monitor the Device/Sensor Lifetimes and set up Maintenance/Service schedules, based on operating hours instead of a calendar-based schedule, see also REMAINING DEVICE LIFETIME (4.7.) (Page 110), REMAINING SENSOR LIFE (4.8.) (Page 112), and CALIBRATION SCHEDULE (4.10.) (Page 118).
- Performing a reset to Factory Defaults will reset all the Maintenance Schedule parameters to their factory defaults.
- The device operates in years. To view Service Interval parameters in hours or days (via SIMATIC PDM only) see SERVICE INTERVAL (4.9.1.) (Page 115).

Factory setting:	years
Setting range[1)]:	Hours, days, years
Purpose:	The device tracks service intervals based on operating hours and monitors the predicted lifetime to the next service. You can modify the Total Service Interval, set schedules for maintenance reminders, and acknowledge them. The maintenance warnings and reminders are communicated to the end user through status information. This information can be integrated into any Asset Management system. For optimal use, we recommend that you use SIMATIC PCS7 Asset Management Software in conjunction with SIMATIC PDM.
Description:	To access these parameters via SIMATIC PDM: • Open the menu **Device** – **Maintenance** and select the Service Schedule tab. • After modifying values/units as required, click on Write to accept the change, and Read to view the effect of the change. • Click on Service Performed to restart the timer and clear any fault messages.

1) Selectable only via SIMATIC PDM.

8.4.9.2 SERVICE INTERVAL (4.9.1.)

Note

The device always operates in years. Changing the units affects only the parameter view of the Remaining Sensor Lifetime parameters in SIMATIC PDM.

Factory setting:	1.0 year
Setting range:	0 to 20 years
Purpose:	User-configurable recommended time between product inspections.
Description:	Units: hours, days, years, are selectable only via SIMATIC PDM.

8.4.9.3 TIME SINCE LAST SERVICE (4.9.2.)

Time elapsed since last service. Can be reset to zero after performing a service. Can be reset locally by entering 0 in this parameter.

To reset to zero:

- In SIMATIC PDM, open the menu **Device** – **Maintenance**, click on the Service Schedule tab, and click on Service Performed to restart the timer and clear any fault messages.
- Via the handheld programmer, manually reset Time since Last Service to zero.

8.4.9.4 TIME UNTIL NEXT SERVICE (4.9.3.)

Read only. SERVICE INTERVAL (4.9.1.) (Page 115) less TIME SINCE LAST SERVICE (4.9.2.) (Page 116).

8.4.9.5 REMINDER ACTIVATION (4.9.4.)

Note

Modifications via SIMATIC PDM

Parameter is accessed via the menus **Device** – **Maintenance**.

Factory setting:	Timer OFF
Setting range:	Timer OFF
	ON NO LIMITS
	ON REMinders 1 and 2 checked
	ON REMinder 2 (Maintenance Demanded) checked
Purpose:	Allows you to enable a maintenance reminder.
Description:	1. First set the values in REMINDER 1 (REQUIRED) (4.9.5.) (Page 116) / REMINDER 2 (DEMANDED) (4.9.6.) (Page 117). 2. Select the desired Reminder Activation option.

8.4.9.6 REMINDER 1 (REQUIRED) (4.9.5.)

Factory setting:	0.164 years
Setting range:	0 to 20 years
Purpose:	If TIME UNTIL NEXT SERVICE (4.9.3.) (Page 116) is equal to or less than this value, the device generates a Maintenance Required reminder.
Description:	1. Modify values as required. 2. Set REMINDER ACTIVATION (4.9.4.) (Page 116) to the desired option.

8.4.9.7 REMINDER 2 (DEMANDED) (4.9.6.)

Factory setting:	0.019 years
Setting range:	0 to 20 years
Purpose:	If TIME UNTIL NEXT SERVICE (4.9.3.) (Page 116) is equal to or less than this value, the device generates a Maintenance Demanded reminder.
Description:	1. Modify values as required. 2. Set REMINDER ACTIVATION (4.9.4.) (Page 116) to the desired option.

8.4.9.8 MAINTENANCE STATUS (4.9.7.)

Indicates which level of maintenance reminder is active.

In SIMATIC PDM, open the menu **Diagnostics** > **Device Diagnostics**, click on the Maintenance tab, and check the Calibration Schedule Status window.

8.4.9.9 ACKNOWLEDGE STATUS (4.9.8.)

Indicates which level of maintenance reminder has been acknowledged.

In SIMATIC PDM, open the menu **Diagnostics** > **Device Diagnostics**, click on the Maintenance tab, and check the Calibration Schedule Status window.

8.4.9.10 ACKNOWLEDGE (4.9.9.)

Purpose:	Acknowledges the current maintenance reminder.
Description:	To acknowledge a reminder via SIMATIC PDM: • Open the menu **Diagnostics** > **Device Diagnostics** and click on the tab Maintenance. • In the Calibration Schedule section, click on Acknowledge Warnings. To acknowledge a reminder via the local control buttons or hand-held programmer: • Press **RIGHT** arrow twice to open parameter view and activate Edit Mode. • Press **RIGHT** arrow to acknowledge the reminder.

8.4.10 CALIBRATION SCHEDULE (4.10.)

8.4.10.1 CALIBRATION SCHEDULE (4.10.)

Note

- Four sets of parameters allow you to monitor the Device/Sensor Lifetimes and set up Maintenance/Service schedules, based on operating hours instead of a calendar-based schedule, see also REMAINING DEVICE LIFETIME (4.7.) (Page 110), REMAINING SENSOR LIFE (4.8.) (Page 112), and SERVICE SCHEDULE (4.9.) (Page 115).
- Performing a reset to Factory Defaults will reset all the Maintenance Schedule parameters to their factory defaults.
- The device operates in years. To view Calibration Interval parameters in hours or days (via SIMATIC PDM only) see CALIBRATION INTERVAL (4.10.1.) (Page 118).

Factory setting:	years
Setting range[1]:	Hours, days, years
Purpose:	The device tracks calibration intervals based on operating hours and monitors the predicted lifetime to the next calibration. You can modify the Total Calibration Interval, set schedules for maintenance reminders, and acknowledge them.
Description:	To access these parameters via SIMATIC PDM: • Open the menu **Device** – **Maintenance** and select the Calibration Schedule tab. • After modifying values/units as required, click on Write to accept the change, and Read to view the effect of the change. • Click on Calibration Performed to restart the timer and clear any fault messages.

[1] Selectable only via SIMATIC PDM.

8.4.10.2 CALIBRATION INTERVAL (4.10.1.)

Note

The device always operates in years. Changing the units affects only the parameter view of the Calibration Interval parameters in SIMATIC PDM.

Factory setting:	1.0 year
Setting range:	0 to 20 years
Purpose:	User-configurable recommended time between product inspections.
Description:	Units: hours, days, years, are selectable only via SIMATIC PDM.

8.4.10.3 TIME SINCE LAST CALIBRATION (4.10.2.)

Time elapsed since last calibration. Can be reset to zero after performing a calibration. Can be reset locally by entering 0 in this parameter.

To reset to zero:

- In SIMATIC PDM, open the menu Device – Maintenance, click on the Calibration Schedule tab, and click on Calibration Performed to restart the timer and clear any fault messages.
- Via the handheld programmer, manually reset **Time since Last Calibration (4.8.1.)** to zero.

8.4.10.4 TIME UNTIL NEXT CALIBRATION (4.10.3.)

Read only. CALIBRATION INTERVAL (4.10.1.) (Page 118) less TIME SINCE LAST CALIBRATION (4.10.2.) (Page 119).

8.4.10.5 REMINDER ACTIVATION (4.10.4.)

Note

Access

To modify this parameter via SIMATIC PDM it must be accessed via the pull-down menu **Device** > **Maintenance**.

Factory setting:	Timer OFF
Setting range:	Timer OFF
	ON NO LIMITS
	ON REMinders 1 and 2 checked
	ON REMinder 2 (Maintenance Demanded) checked
Purpose:	Allows you to enable a maintenance reminder.
Description:	1. First set the values in REMINDER 1 (REQUIRED) (4.10.5.) (Page 119) REMINDER 2 (DEMANDED) (4.10.6.) (Page 120). 2. Select the desired Reminder Activation option.

8.4.10.6 REMINDER 1 (REQUIRED) (4.10.5.)

Factory setting:	0.164 years
Setting range:	0 to 20 years
Purpose:	If TIME UNTIL NEXT CALIBRATION (4.10.3.) (Page 119) is equal to or less than this value, the device generates a Maintenance Required reminder.
Description:	1. Modify values as required. 2. Set REMINDER ACTIVATION (4.10.4.) (Page 119) to the desired option.

8.4.10.7 REMINDER 2 (DEMANDED) (4.10.6.)

Factory setting:	0.019 years
Setting range:	0 to 20 years
Purpose:	If TIME UNTIL NEXT CALIBRATION (4.10.3.) (Page 119) is equal to or less than this value, the device generates a Maintenance Demanded reminder.
Description:	1. Modify values as required. 2. Set Reminder Activation (4.8.5.) (Page 119) to the desired option.

8.4.10.8 MAINTENANCE STATUS (4.10.7.)

Indicates which level of maintenance reminder is active.

In SIMATIC PDM, open the menu **Diagnostics** > **Device Diagnostics**, click on the Maintenance tab, and check the Calibration Schedule Status window.

8.4.10.9 ACKNOWLEDGE STATUS (4.10.8)

Indicates which level of maintenance reminder has been acknowledged.

In SIMATIC PDM, open the menu **Diagnostics** > **Device Diagnostics**, click on the Maintenance tab, and check the Calibration Schedule Status window.

8.4.10.10 ACKNOWLEDGE (4.10.9.)

Purpose:	Acknowledges the current maintenance reminder.
Description:	To acknowledge a reminder via SIMATIC PDM: • Open the menu **Diagnostics** > **Device Diagnostics** and click on the tab Maintenance. • In the Calibration Schedule section, click on Acknowledge Warnings. To acknowledge a reminder via the local control buttons or hand-held programmer: • Press **RIGHT** arrow twice to open parameter view and activate Edit Mode. • Press **RIGHT** arrow to acknowledge the reminder.

8.4.11 STORED SOFTWARE VERSION (4.11.)

Displays the version string of the firmware previously uploaded to the local display (if any).

8.5 COMMUNICATION (5.)

8.5.1 DEVICE ADDRESS (5.1.)

Note

The address can be changed and locked from a remote master. See Quick Start Wizard via the handheld programmer (Page 48) for details on disabling the address lock and MASTER RESET (4.2.) (Page 108) to reset Device Address to 126.

Factory setting:	126
Setting range:	0 to 126
Purpose:	Sets the unique address of the device on the network (also called PROFIBUS address).
Description:	To reset Device Address via SIMATIC PDM: See Configuring a new device (Page 54). To change Device Address via the handheld programmer: See **Device Address** under Quick Start Wizard via the handheld programmer (Page 48).

8.5.2 PROFIBUS IDENTIFICATION (5.2.)

Factory setting:	MANUFACTURER	
Setting range:	STD PROFILE	Standard Profile (uses generic GSD for 2 AIFB) [ident # = 0x9701]
	MANUFACTURER	Manufacturer-specific (uses Siemens EDD andGSD file, which identifies the LR560 [PROFIBUSPA]) [ident # = 0x816B]
	STD – AIFB 1 ONL.	Standard Profile AIFB 1 only (uses generic GSD for1 AIFB) [ident # = 0x9700]
Purpose:	Identifies the device on the network. The Ident Number must match that in the GSD file (the GSD file provides information on the device to the master).	

8.6 SECURITY (6.)

8.6.1 REMOTE LOCKOUT (6.1.1.)

Factory setting:	OFF
Setting range:	OFF, ON
Purpose:	Enables/disables the read/write access to parameters via remote communications. If locked via the handheld programmer, it can be unlocked only via the handheld programmer. If locked via AMS, it can be reset via AMS.

8.6.2 WRITE PROTECT (6.2.1.)

Factory setting:	Unlock value (2457): Lock Off	
Setting range:	0 to 9999	
	Unlock value (2457)	Lock Off
	Any other value	Lock On
Purpose:	Prevents any changes to parameters.	
Description:	• To turn Lock On, key in any value other than the Unlock Value 2457. • To turn Lock Off, key in the Unlock Value 2457.	

8.7 LANGUAGE (7.)

8.7.1 LANGUAGE (7.)

Factory setting:	English
Setting range:	English, Deutsch, Français, Español, 简体中文
Purpose:	Selects the language to be used on the local display.

Service and maintenance

9

9.1 Basic safety notes

Note

The device is maintenance-free.

9.1.1 Maintenance

The device is maintenance-free. However, a periodic inspection according to pertinent directives and regulations must be carried out.

An inspection can include, for example, check of:

- Ambient conditions
- Seal integrity of the process connections, cable entries, and cover
- Reliability of power supply, lightning protection, and grounds

WARNING

Impermissible repair and maintenance of the device

- Repair and maintenance must be carried out by Siemens authorized personnel only.

WARNING

Impermissible repair of explosion protected devices

Risk of explosion in hazardous areas

- Repair must be carried out by Siemens authorized personnel only.

NOTICE

Penetration of moisture into the device

Device damage.

- Make sure when carrying out cleaning and maintenance work that no moisture penetrates the inside of the device.

WARNING

Leaks in the sample gas path

Risk of poisoning.

When measuring toxic process media, these can be released or collect in the device if there are leaks in the sample gas path.

- Purge the device as described in Commissioning (Page 37).
- Dispose of the toxic process media displaced by purging in an environmentally friendly manner.

9.2 Cleaning

Cleaning the enclosure

- Clean the outside of the enclosure with the inscriptions and the display window using a cloth moistened with water or a mild detergent.
- Do not use any aggressive cleansing agents or solvents, e.g. acetone. Plastic parts or the painted surface could be damaged. The inscriptions could become unreadable.

WARNING

Electrostatic charge

Risk of explosion in hazardous areas if electrostatic charges develop, for example, when cleaning plastic surfaces with a dry cloth.

- Prevent electrostatic charging in hazardous areas.

9.3 Maintenance and repair work

WARNING

Maintenance during continued operation in a hazardous area

There is a risk of explosion when carrying out repairs and maintenance on the device in a hazardous area.

- Isolate the device from power.

- or -

- Ensure that the atmosphere is explosion-free (hot work permit).

WARNING

Humid environment

Risk of electric shock.

- Avoid working on the device when it is energized.
- If working on an energized device is necessary, ensure that the environment is dry.
- Make sure when carrying out cleaning and maintenance work that no moisture penetrates the inside of the device.

CAUTION

Hot surfaces

Risk of burns during maintenance work on parts having surface temperatures exceeding 70 °C (158 °F).

- Take corresponding protective measures, for example by wearing protective gloves.
- After carrying out maintenance, remount touch protection measures.

WARNING

Enclosure open

Risk of explosion in hazardous areas as a result of hot components and/or charged capacitors inside the device.

To open the device in a hazardous area:

1. Isolate the device from power.
2. Observe the wait time specified in Technical data (Page 134) or on the warning sign before opening the device.
3. Visually inspect sensor inlet and outlet.

Exception: Devices exclusively having the type of protection "Intrinsic safety Ex i" may be opened in an energized state in hazardous areas.

CAUTION

Hazardous voltage at open device

Risk of electric shock when the enclosure is opened or enclosure parts are removed.

- Before you open the enclosure or remove enclosure parts, de-energize the device.
- If maintenance measures in an energized state are necessary, observe the particular precautionary measures. Have maintenance work carried out by qualified personnel.

WARNING

Hot, toxic or corrosive process media

Risk of injury during maintenance work.

When working on the process connection, hot, toxic or corrosive process media could be released.

- As long as the device is under pressure, do not loosen process connections and do not remove any parts that are pressurized.
- Before opening or removing the device ensure that process media cannot be released.

WARNING

Improper connection after maintenance

Risk of explosion in areas subject to explosion hazard.

- Connect the device correctly after maintenance.
- Close the device after maintenance work.

Refer to Connecting (Page 30).

9.4 Return procedure

Enclose the bill of lading, return document and decontamination certificate in a clear plastic pouch and attach it firmly to the outside of the packaging.

Required forms

- Delivery note
- Return goods delivery note (http://www.siemens.com/processinstrumentation/returngoodsnote)

  with the following information:

  – Product (item description)

  – Number of returned devices/replacement parts

  – Reason for returning the item(s)
- Decontamination declaration (http://www.siemens.com/sc/declarationofdecontamination)

  With this declaration you warrant "that the device/replacement part has been carefully cleaned and is free of residues. The device/replacement part does not pose a hazard for humans and the environment."

  If the returned device/replacement part has come into contact with poisonous, corrosive, flammable or water-contaminating substances, you must thoroughly clean and decontaminate the device/replacement part before returning it in order to ensure that all hollow areas are free from hazardous substances. Check the item after it has been cleaned.

  Any devices/replacement parts returned without a decontamination declaration will be cleaned at your expense before further processing.

Note

Return of products with lithium batteries

Lithium batteries are dangerous goods according to the Regulation of Dangerous Goods, UN 3090 and UN 3091.

- Remove lithium batteries prior to shipment.
- If the battery cannot be removed, return the product according to the Regulation of Dangerous Goods with special transport documentation.

9.5 Disposal

Devices described in this manual should be recycled. They may not be disposed of in the municipal waste disposal services according to the Directive 2012/19/EC on waste electronic and electrical equipment (WEEE).

Devices can be returned to the supplier within the EC, or to a locally approved disposal service for eco-friendly recycling. Observe the specific regulations valid in your country.

Further information about devices containing batteries can be found at: Information about battery / product return (WEEE) (https://support.industry.siemens.com/cs/document/109479891/)

Diagnosing and troubleshooting 10

10.1 Device status icons

Icon	Priority Level	Meaning
	1	• Maintenance alarm • Measurement values are not valid
	2	• Maintenance warning: maintenance demanded immediately • Measured signal still valid
	3	• Maintenance required • Measured signal still valid
	1	• Process value has reached an alarm limit
	2	• Process value has reached a warning limit
	3	• Process value has reached a tolerance limit
	1	• Configuration error • Device will not work because one or more parameters/components is incorrectly configured
	2	• Configuration warning • Device can work but one or more parameters/components is incorrectly configured
	3	• Configuration changed • Device parameterization not consistent with parameterization in project. Look for info text.
	1	• Manual operation (local override) • Communication is good; device is in manual mode.
	2	• Simulation or substitute value • Communication is good; device is in simulation mode or works with substitute values.
	3	• Out of operation • Communication is good; device is out of action.
		• No data exchange
		• Write access enabled
		• Write access disabled

10.2 General fault codes

Note

- The status icon shown associated with each fault is the default icon in Condensed Mode.
- If more than one fault is present, the device status indicator and text for each fault alternate at 2 second intervals.
- Some faults cause the device to go to Fail-safe mode (Fault 52). These are indicated with an asterisk (*).
- If you receive an LOE error communicated via the communications bus, double-check the local display prior to contacting the service department. Occasionally the device will show a hardware fault (S96) that is reported through the bus as an LOE. In such a case, the device electronics will need to be replaced.

Code/ Icon		Meaning	Corrective Action
S: 0	*	The device was unable to get a measurement within the Fail-safe LOE Timer period. Possible causes: faulty installation, antenna material buildup, foaming/other adverse process conditions, invalid configuration range.	• Ensure installation details are correct. • Ensure no antenna material buildup. Clean if necessary. • Adjust process conditions to minimize foam or other adverse conditions. • Correct configuration range. • If fault persists, contact your local Siemens representative.
S: 2	*	Unable to collect profile because of a power condition that is outside the operating range of the device.	Repair required: contact your local Siemens representative.
S: 3		Device is nearing its lifetime limit according to the value set in REMINDER 1 (REQUIRED) (4.7.5.) (Page 111).	Replacement is recommended.
S: 4		Device is nearing its lifetime limit according to the value set in REMINDER 2 (DEMANDED) (4.7.6.) (Page 111).	Replacement is recommended.
S: 6		Sensor is nearing its lifetime limit according to the value set inREMINDER 1 (REQUIRED) (4.8.5.) (Page 113).	Replacement is recommended.
S: 7		Sensor is nearing its lifetime limit according to the value set in REMINDER 2 (DEMANDED) (4.8.6.) (Page 114).	Replacement is recommended.
S: 8		Service interval as defined in REMINDER 1 (REQUIRED) (4.9.5.) (Page 116) has expired.	Perform service.

Code/ Icon		Meaning	Corrective Action
S: 9		Service interval as defined in REMINDER 2 (DEMANDED) (4.9.6.) (Page 117) has expired.	Perform service.
S: 10		Input parameters LOW CALIBRATION POINT (2.3.5.1.) (Page 84) and HIGH CALIBRATION POINT (2.3.5.2.) (Page 84) are the same.	• Check calibration settings of device. • Ensure settings for High Calibration Point and Low Calibration Point are different.
S: 11		Internal temperature sensor failure.	Repair required: contact your local Siemens representative.
S: 12		Internal temperature of device has exceeded specifications: it is operating outside its temperature range.	• Relocate device and/or lower process temperature enough to cool device. • Inspect for heat-related damage and contact your local Siemens representative if repair is required. • Fault code will persist until a manual reset is performed using SIMATIC PDM or the LCD interface.
S: 14		INPUT SCALING (2.5.5.) (Page 95) Upper and lower values for AIFB1 are the same.	• Check configuration for AIFB1. • Ensure that Upper Value and Lower Value (Input Scaling) are not the same.
S: 15		INPUT SCALING (2.5.5.) (Page 95) Upper and lower values for AIFB2 are the same.	• Check configuration for AIFB2. • Ensure that Upper Value and Lower Value (Input Scaling) are not the same.
S: 17		Calibration interval as defined in REMINDER 1 (REQUIRED) (4.10.5.) (Page 119) has expired.	Perform calibration.
S: 18		Calibration interval as defined in REMINDER 2 (DEMANDED) (4.10.6.) (Page 120) has expired.	Perform calibration.
S: 25		Internal error.	Reset power. If fault persists,contact your local Siemens representative.
S: 28	*	Internal device failure caused by a RAM memory error.	Repair required: contact your local Siemens representative.
S: 29	*	EEPROM damaged.	Repair required: contact your local Siemens representative.

Code/ Icon		Meaning	Corrective Action
S: 30		EEPROM corrupt.	Reset power. If fault persists, contact your local Siemens representative.
S: 31	*	Flash error.	Repair required: contact your local Siemens representative.
S: 32		IDENT number conflict.	Ensure value of the Ident number selector is correct for the network configuration. If it is correct, the device needs to be re parameterized by the PLC.
S: 33	*	Factory calibration for the internal temperature sensor has been lost.	Repair required: contact your local Siemens representative.
S: 34	*	Factory calibration for the device has been lost.	Repair required: contact your local Siemens representative.
S: 64 to S:83		Device error. NOTE: Fault text and icons appear only on LCD.	Repair required: contact your local Siemens representative.
S: 94 to S:112		Device error. NOTE: Fault text and icons appear only on LCD.	Repair required: contact your local Siemens representative.

10.3 Operation troubleshooting

Operating symptoms, probable causes, and resolutions.

Symptom	Cause	Action
Display shows S: 0 LOE	level or target is out of range	• check specifications • check LOW CALIBRATION POINT (2.3.5.1.) (Page 84). • increase CONFIDENCE (2.4.7.1.) (Page 91).
Display shows S: 0 LOE	material build-up on antenna	• Use the air purge feature to clean the antenna • re-locate SITRANS LR560.
Display shows S: 0 LOE	location or aiming: • poor installation • flange not level • Auto False Echo Suppression may be incorrectly applied	• check to ensure nozzle is vertical • ensure end of antenna protrudes from end of nozzle • review AUTO ECHO SUPPRESSION (2.4.8.1.) (Page 92) • ensure Auto False Echo Suppression Range is set correctly
Display shows S: 0 LOE	antenna malfunction: • temperature too high • physical damage	• check temperature in MAXIMUM VALUE (3.4.2.) (Page 103). • relocate
Reading does not change, but the level does	SITRANS LR560 processing wrong echo, for example, vessel wall, or structural member	• re-locate SITRANS LR560 • check nozzle for internal burrs or welds • rotate device 90° • use AUTO ECHO SUPPRESSION (2.4.8.1.) (Page 92) if necessary.
Measurement is consistently off by a constant amount	• setting for LOW CALIBRATION POINT (2.3.5.1.) (Page 84) not correct • setting for SENSOR OFFSET (2.3.5.3.) (Page 84) not correct	• check distance from sensor reference point to LOW CALIBRATION POINT (2.3.5.1.) (Page 84) • check SENSOR OFFSET (2.3.5.3.) (Page 84)
Screen blank	power error	• check nameplate rating against voltage supply • check power wiring or source
Reading erratic	echo confidence weak	• refer to CONFIDENCE (2.4.7.1.) (Page 91). • use AUTO ECHO SUPPRESSION (2.4.8.1.) (Page 92) and AUTO SUPPRESSION RANGE (2.4.8.2.) (Page 92) • use foam deflector or stillpipe
	material filling	• Re-locate SITRANS LR560.
Reading response slow	FILL RATE/MIN (2.3.6.2.) (Page 86) setting incorrect	• increase measurement response if possible

Symptom	Cause	Action
Reads correctly but occasionally reads high when vessel is not full	• detecting close range echo • build up near top of vessel or nozzle • nozzle problem	• Use the air purge feature to clean the antenna • use AUTO ECHO SUPPRESSION (2.4.8.1.) (Page 92) and AUTO SUPPRESSION RANGE (2.4.8.2.) (Page 92).
Level reading lower than material level	• material is within Near Range zone • multiple echoes processed	• decrease NEAR RANGE (2.4.1.) (Page 87) (minimum value depends on antenna type) • raise SITRANS LR560 • ensure ALGORITHM (2.4.5.1.) (Page 88) is set to **TF** (First echo)

10.4 Communication troubleshooting

1. Check the following:
   - There is power at the device.
   - The LCD shows the relevant data.
   - The device can be programmed using the handheld programmer.
   - If any fault codes are being displayed see Acyclic Extended Diagnostics (General Fault Codes) (Page 172) for a detailed list.
2. Verify that the wiring connections are correct.
3. Check the PROFIBUS address and make sure all devices are at unique PROFIBUS addresses.
4. See the table below for specific symptoms.

Symptom	Corrective action
The device cannot be programmed via the handheld programmer.	• Make sure WRITE PROTECT (6.2.1.) (Page 122) is set to the unlock value.
You try to set a parameter via remote communications but the parameter remains unchanged.	• Ensure REMOTE LOCKOUT (6.1.1.) (Page 122) is disabled. • Ensure WRITE PROTECT (6.2.1.) (Page 122) is set to the unlock value. • See **To reset the PROFIBUS address to 126** under Master Reset (Page 70) to disable an address lock.
The PLC value equals the display value but does not correspond to actual material level.	• Ensure Scaling in AIFB1 is correctly entered. • Ensure High Calibration Point is correctly entered. • View the echo profile to see if the wrong echo is being selected. If so, see Operation troubleshooting (Page 132) for possible causes and corrective action.
The PLC value is not equal to the displayed value (regardless of actual material level).	• Confirm you are looking at the right spot in the PLC. • Ensure scaling has not been programmed into the PLC: all scaling should be performed by the device. • Check the network to ensure the PLC is communicating with the device.

If you continue to experience problems, go to our website (www.siemens.com/LR560), and check the FAQs for SITRANS LR560, or contact your Siemens representative.

Technical data

11

Note

Device specifications

Siemens makes every attempt to ensure the accuracy of these specifications but reserves the right to change them at any time.

11.1 POWER

Bus powered	9 to 32 V DC, per IEC 61158-2 (PROFIBUS PA)
Current consumed	13.5 mA

11.2 Performance

Measurement Accuracy[1] (measured in accordance with IEC 60770-1)

Maximum measured error	5 mm (0.2") including hysteresis and non-repeatability[2]	
Frequency	78 to 79 GHz FMCW	
Maximum measurement range[3]	40 m version	40 m (131 ft)
	100 m version	100 m (328 ft)
Minimum detectable distance	400 mm (15.7") from sensor reference point[4]	
Update time[5]	maximum 10 seconds, depending on setting for RESPONSE RATE (2.3.6.1.) (Page 85)	
Influence of ambient temperature	< 0.003%/K (average over full temperature range, referenced to maximum range)	
Long-term stability	<0.1%/24 months	
Dielectric constant of material measured	for ranges up to 20 m (65.6 ft)	minimum dK = 1.6
	for ranges up to 100 m (328 ft)	minimum dK = 2.5
Memory	non-volatile EEPROM	
	no battery required	

[1] Reference conditions: POSITION DETECT (2.4.5.2.) (Page 88) set to Center and ALGORITHM (2.4.5.1.) (Page 88) set to True First Echo.

[2] Under severe EMI/EMC environments per IEC61326-1 or NAMUR NE21, the device error may increase to a maximum of 25mm (1").

[3] From sensor reference point.

[4] See Dimension drawings (Page 139).

[5] Reference conditions: RESPONSE RATE (2.3.6.1.) (Page 85) set to **FAST**

11.3 Construction

Process connection:	Universal flat-faced flange[1)]	3"/80 mm, 4"/100 mm, 6"/150 mm Material: 316L (1.4404 or 1.4435), or 304 stainless steel
	Aimer flange[1)]	3"/80 mm, 4"/100 mm, 6"/150 mm Material: Polyurethane powder-coated cast aluminum
	Universal stamped flange[1)]	3"/80 mm, 4"/100 mm, 6"/150 mm Material: 304 stainless steel
Enclosure	Construction	316L/1.4404 stainless steel
	Conduit entry	M20x1.5, or ½" NPT
	Conduit entry connector (optional)	M12 connector (shipped with M20 to M12 adaptor) or, 7/8" connector (shipped with 1/2" NPT to 7/8" adaptor)
	Ingress protection	Type 4X, Type 6, IP68
	Lid with window	Polycarbonate (window material)
	Sun shield (optional)	304 stainless steel
Lens antenna material	40 m version	PEI
	100 m version	PEEK
Air purge connection	equipped with female 1/8" NPT fitting	
Weight (excluding extensions):	3" stainless steel flange model	3.15 kg (6.94 lb)

[1)] Universal flange mates with EN 1092-1 (PN16)/ASME B16.5 (150 lb)/JIS 2220 (10K) bolt hole pattern.

11.4 Operating conditions

Note

- For the specific configuration you are about to use or install, check transmitter nameplate and see Technical data (Page 134).
- Use appropriate conduit seals to maintain IP or NEMA rating.

Location	indoor/outdoor
Altitude	5000 m (16,404 ft) max.
Ambient temperature	−40 to +80 °C (−40 to +176 °F)
Storage temperature	−40 to +80 °C (−40 to +176 °F)
Relative humidity	suitable for outdoor use Type 4X, Type 6, IP68 enclosure (see note above)
Installation category	I
Pollution degree	4

Reference operating conditions according to IEC 60770-1

Ambient temperature	15 to 25 °C (59 to 77 °F)
Humidity	45 to 75% relative humidity
Ambient pressure	860 to 1060 mbar a (86000 to 106000 N/m^2 g)

11.5 Process

Temperature and pressure[1)]

Note

Pressure

Universal stamped flanges are to be used for 0.5 bar max pressure only.

Version	Stainless steel flange	Aimer flange 0.5 bar max.	Aimer flange 3.0 bar max
40 m	–40 to +100 °C (–40 to +212 °F)	–40 to +100 °C (–40 to +212 °F)	–40 to +100 °C (–40 to +212 °F)
100 m	–40 to +200 °C (–40 to +392 °F)	–40 to +200 °C (–40 to +392 °F)	–40 to +120 °C (–40 to +248 °F)

[1)] Maximum and minimum temperatures are dependent on the process connection, antenna and O-ring materials. Use of the Easy Aimer limits maximum temperature.

11.6 Communication: Profibus PA

Communication: Profibus PA 3.01

11.7 Approvals data

Note

Approvals

The device label lists the approvals that apply to your device.

General			CSA$_{US/C}$, FM, CE, RCM
Radio			Europe (RED), FCC, Industry Canada
Hazardous	Non-sparking/Energy Limited	Eu-rope/International	ATEX II 3G Ex nA/nL IIC T4 Gc
		Brazil	INMETRO: DNV 12.0085 X Ex nA IIC T4 Gc -40 ºC ≤ Ta ≤ +80 ºC Un = 32 Vcc
		China	Ex nA IIC T4 Gc
	Dust Ignition Proof	Eu-rope/International	ATEX II 1D, 1/2D, 2D Ex ta IIIC T139 °C Da IP68 IECEx SIR 09.0149X
		Brazil	INMETRO: DNV 12.0085 X Ex ta IIIC T139 ºC Da IP68 -40 ºC ≤ Ta ≤ +80 ºC
		China	Ex tD A20 IP68 T139ºC
	Dust Ignition Proof	US/Canada	FM/CSA: Class II, Div. 1, Groups E, F, G Class III T4
	Non-incendive	US/Canada	FM/CSA Class I, Div. 2, Groups A, B, C, D, T4

CE Electromagnetic Compatibility (EMC) conformity	
Emission	EN 55011 / CISPR-11
Immunity	EN/IEC 61326-1 (Industry) NAMUR NE 21

11.8 Programmer (infrared keypad)

The battery is non-replaceable with a lifetime expectancy of 10 years in normal use. To estimate the lifetime expectancy, check the nameplate on the back for the serial number. The date of manufacture is encoded in the serial number. For example, the following was manufactured on March 5, 2016:

PBD/**H3050001**

H: year of manufacture (H is the alpha code referring to 2016; J refers to 2017 and so on).

3: month of manufacture

05: day of manufacture

0001: 4-digit sequential

Year 2010: Alpha code = A	Year 2016: Alpha code = H
Year 2011: Alpha code = B	Year 2017: Alpha code = J
Year 2012: Alpha code = C	Year 2018: Alpha code = K
Year 2013: Alpha code = D	Year 2019: Alpha code = L
Year 2014: Alpha code = E	Year 2020: Alpha code = M
Year 2015: Alpha code = F	

Siemens Milltronics Infrared IS (Intrinsically Safe) Handheld Programmer for hazardous and all other locations (battery is non-replaceable).

Approvals	CE FM/CSA Class I, II, III, Div. 1, Gr. A to G T6 ATEX 1 GD Ex ia op is IIC T4 Ga Ex ia op is IIIC T135°C Da IECEx Ex ia op is IIC T4 Ga Ex ia op is IIIC T135°C Da INMETRO Ex ia op is IIC T4 Ga Ex ia op is IIIC T135°C Da
Ambient temperature	−20 to +50 °C (−5 to +122 °F)
Interface	proprietary infrared pulse signal
Power	3 V non-replaceable lithium battery
Weight	150 g (0.3 lb)
Color	black
Part number	7ML1930-1BK

Dimension drawings

12

12.1 SITRANS LR560 with stainless steel universal flat-faced flange

Note

Bolt hole patterns and dimensions

Refer to Universal slotted flange (Page 143) for bolt hole patterns and dimensions.

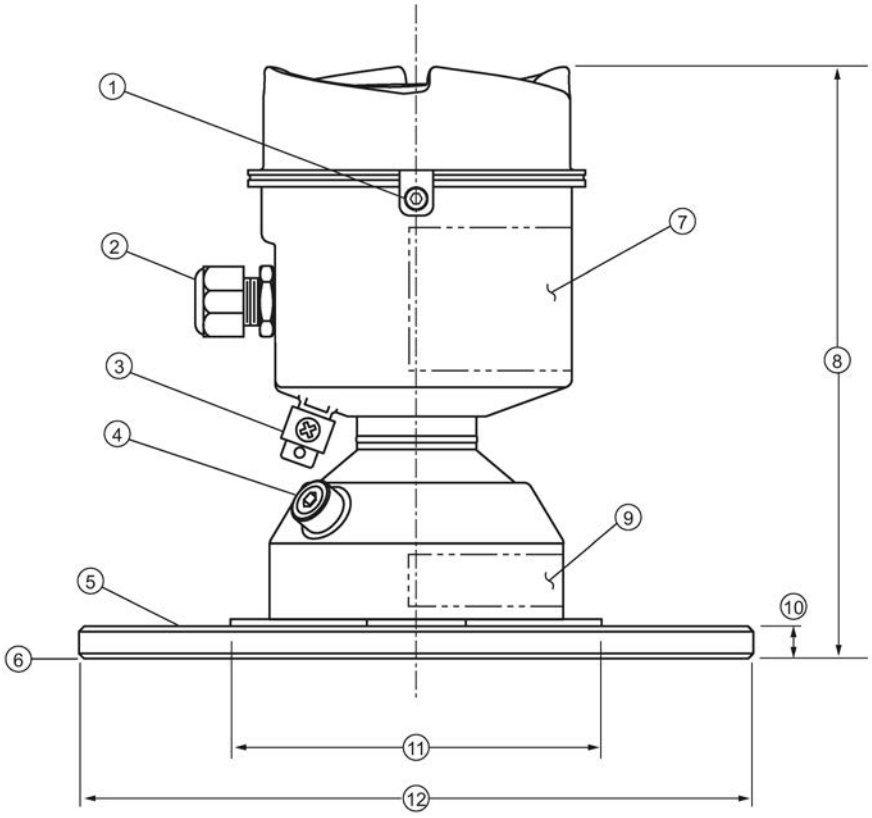

Dimensions are in mm (inch)

① lid lock
② cable gland [1)]
③ grounding lug
④ purge inlet
⑤ process connection, flange
⑥ sensor reference point
⑦ device label
⑧ height: 176 (6.93)
⑨ pressure/temperature related information
⑩ thickness: 9.6 (0.38)
⑪ 110 (4.33)
⑫ flange OD:
3": 200 (7.87)
4": 229 (9.02)
6": 285 (11.22)

[1)] Shipped with product, packed in a separate bag.

12.2 SITRANS LR560 with 3" aimer flange

Note

Bolt hole patterns and dimensions

Refer to Universal slotted flange (Page 143) for bolt hole patterns and dimensions.

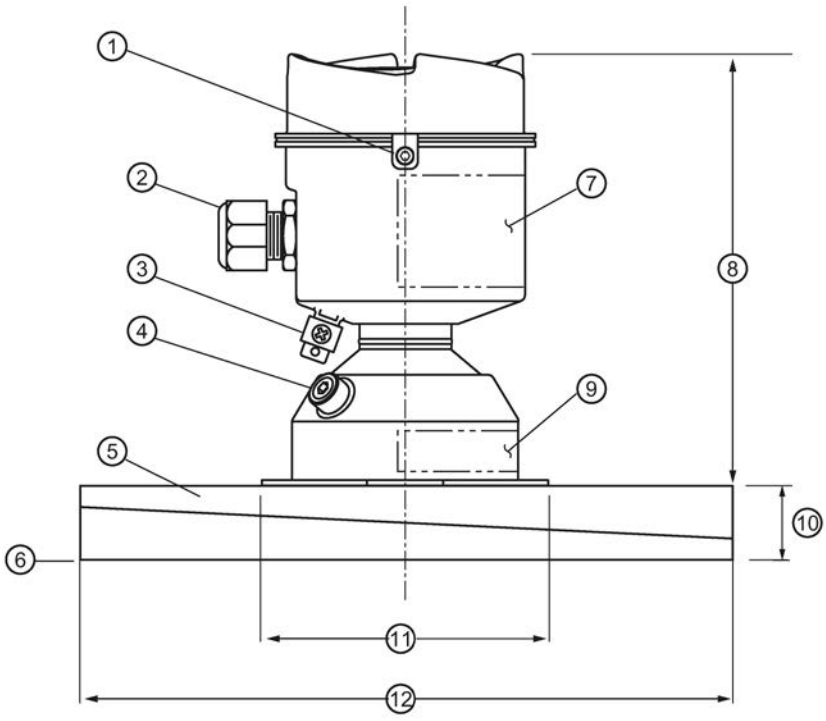

Dimensions are in mm (inch)

① lid lock
② cable gland[1)]
③ grounding lug
④ purge inlet
⑤ process connection, aimer flange
⑥ sensor reference point
⑦ device label
⑧ height: 166.1 (6.54)
⑨ pressure/temperature related information
⑩ thickness: 23.3 (0.92)
⑪ 110 (4.33)
⑫ flange OD: 200 (7.87)

[1)] Shipped with product, packed in a separate bag.

12.3 SITRANS LR560 with 4" and 6" aimer flange

Note

Bolt hole patterns and dimensions

Refer to Universal slotted flange (Page 143) for bolt hole patterns and dimensions.

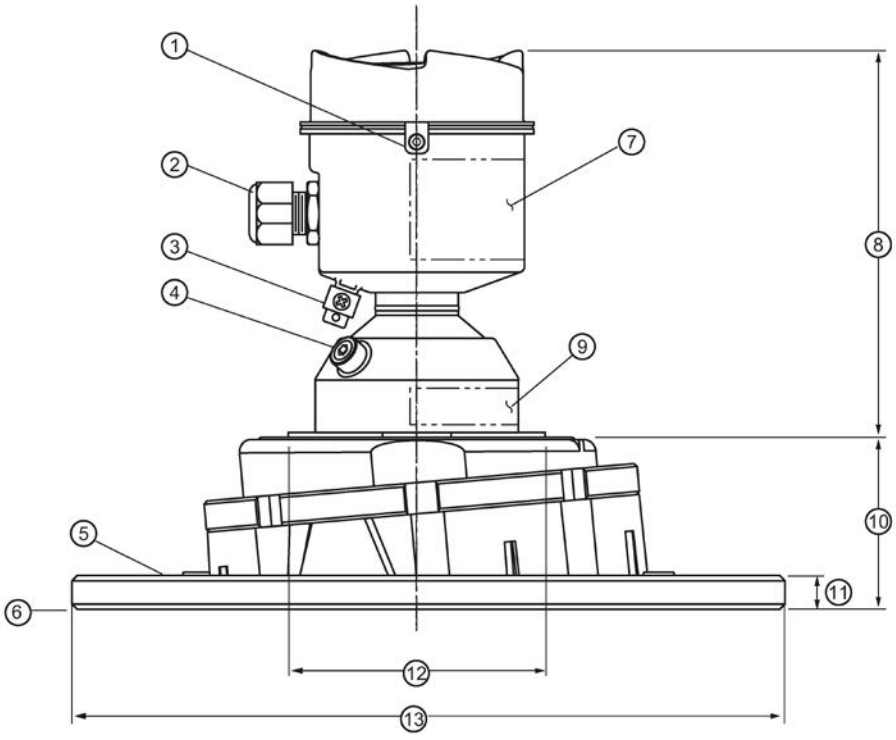

Dimensions are in mm (inch)

① lid lock	⑧ 166.1 (6.54)
② cable gland[1)]	⑨ pressure/temperature related information
③ grounding lug	⑩ 4": 53.2 (2.09) 6": 60.0 (2.36)
④ purge inlet	⑪ 9.6 (0.38)
⑤ process connection: aimer flange	⑫ 110 (4.33)
⑥ sensor reference point	⑬ 4": 229 (9.02) 6": 285 (11.22)
⑦ device label	

[1)] Shipped with product, packed in a separate bag.

C Spanner

A C spanner, used to loosen the aimer locking ring, is shipped with the device, packed separately.

12.4 SITRANS LR560 with stamped flange

Note

Bolt hole patterns and dimensions

Refer to Stamped flange (Page 145) for bolt hole patterns and dimensions.

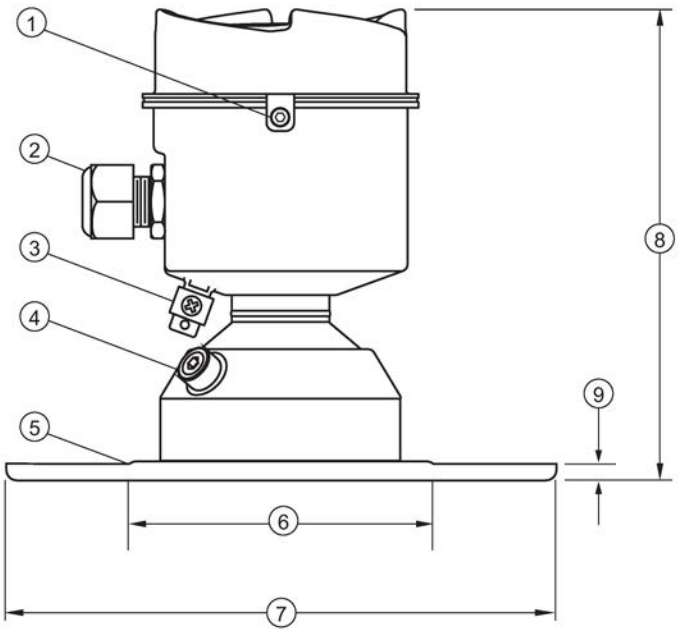

Dimensions in mm (inch)

① lid lock

② cable gland[1)]

③ grounding lug

④ purge inlet

⑤ process connection, stamped flange

⑥ 110 (4.33)

⑦ flange OD:
2": 200 (7.87)
3": 234 (9.21)
6": 290 (11.42)

⑧ height: 176 (6.93)

⑨ flange thickness: 6 (0.24)

[1)] Shipped with product, packed in a separate bag.

12.5 Universal slotted flange

Note

Bolting and gasket materials

The user is responsible for the selection of bolting and gasket materials which will fall within the limits of the flange and its intended use and which are suitable for the service conditions.

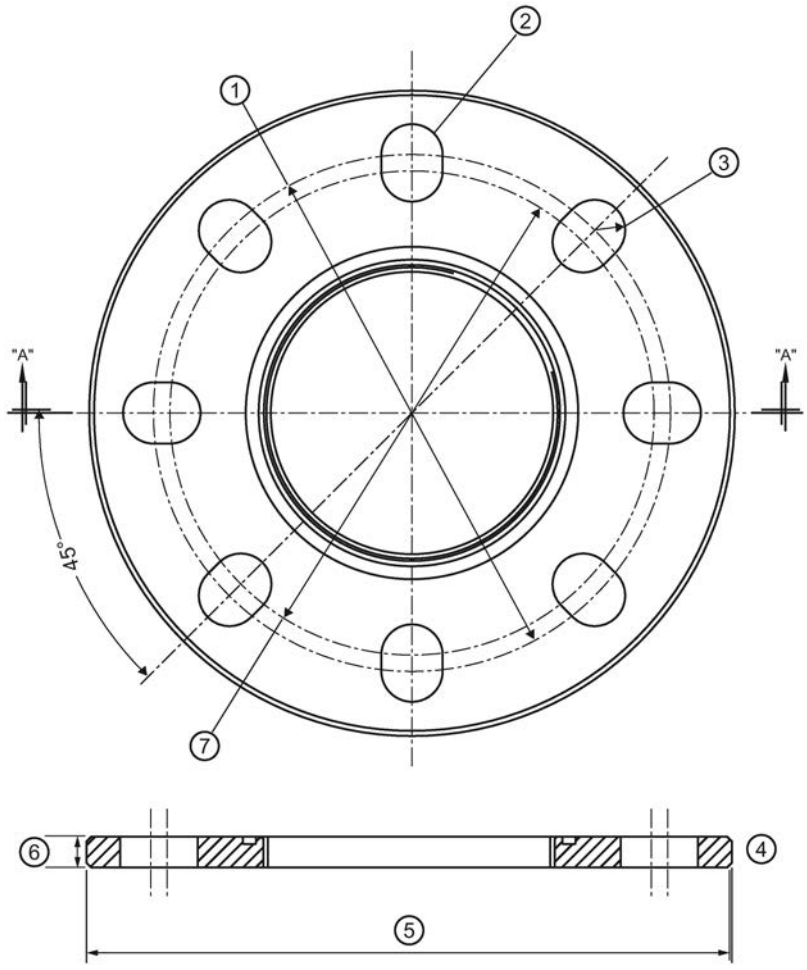

① bolt hole circle max. diameter
② number of slotted bolt holes
③ bolt hole radius
④ section A-A
⑤ flange O.D.
⑥ thickness
⑦ bolt hole circle min. diameter

Slotted flange dimensions and aimer[1)]

Pipe size	Flange O.D.	Thickness	Bolt hole circle max Ø	Bolt hole circle min Ø	Bolt hole radius	No. of slotted holes
3 (80)	7.87 (200)	0.38 (9.65)	6.30 (160)	5.91 (150)	0.37 (9.5)	8
4 (100)	9.00 (229)	0.38 (9.65)	7.52 (191)	6.89 (175)	0.37 (9.5)	8
6 (150)	11.22 (285)	0.38 (9.65)	9.53 (242)	9.45 (240)	0.45 (11.5)	8

Dimensions are in inch (mm)

[1)] Universal flange mates with EN 1092-1 (PN16)/ASME B16.5 (150 lb)/JIS 2220 (10K) bolt hole pattern.

12.6 Stamped flange

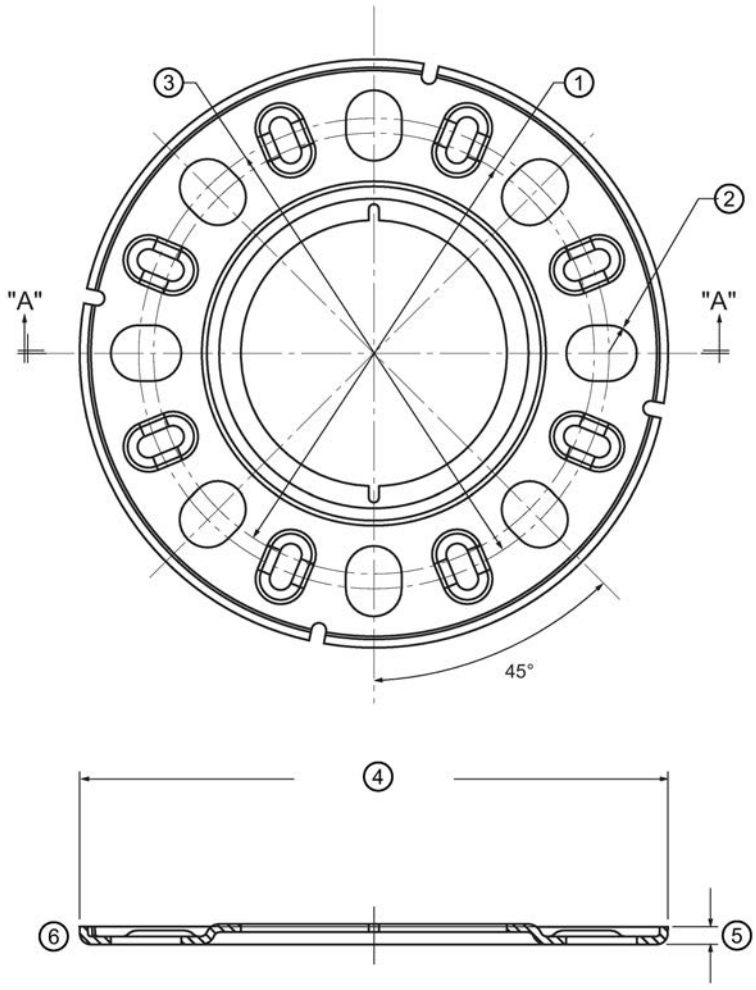

① bolt hole circle min. diameter
② bolt hole radius
③ bolt hole circle max. diameter
④ flange OD
⑤ thickness
⑥ section A-A

Stamped flange dimensions

Pipe size	Flange O.D.	Thickness	Bolt hole circle max Ø	Bolt hole circle min Ø	Bolt hole radius	No. of slotted holes
3 (80)	7.87 (200)	6.0 (0.24)	6.30 (160)	5.91 (150)	0.37 (9.5)	8
4 (100)	9.21 (234)	6.0 (0.24)	7.52 (191)	6.89 (175)	0.37 (9.5)	8
6 (150)	11.42 (290)	6.0 (0.24)	9.53 (242)	9.45 (240)	0.45 (11.5)	8

Dimensions in inch (mm)

12.7 Process connection label (pressure rated versions)

For pressure-rated versions only, the process connection label lists the following information:

Item	Sample Text	Comments/Explanation
CONNECTION SERIES	ASME B16.5 / EN 1092-1/ JIS B 2220	Flange Series: dimensional pattern based on ASME B16.5/EN 1092-1/JIS B 2 220 flange standards
NOM. PIPE SIZE (DN)	4 INCH / 100mm	Nominal Pipe Size: based on 150#/PN16/10K flange pressure classes
MAWP (PS)	3 BAR	Maximum Allowable Working Pressure at Design Temperature
DESIGN TEMP. (TS)	100 ºC	Maximum Allowable Working Temperature
MIN. PROCESS	3 BAR AT -40 ºC	Minimum Wetted Process Conditions
0F13589.5		Canadian Registration Number (CRN)
TEST PRESSURE (PT)	5.2 BAR	Production Test Pressure
TEST DATE	10/01/04	Date of Pressure Test (Year/Month/Day)
PROCESS SERIES	25785	Pressure Tag Family Series
WETTED NON-METALLIC	PEI	Sensor Lens Material
WETTED METALLICS	304L	Process Connection Material(s)
WETTED SEALS	FKM / VQM	Seal Material(s)

Technical reference

A

A.1 Technical reference

A.2 Principles of operation

SITRANS LR560 is a 2-wire, 78 GHz FMCW (Frequency Modulated Continuous Wave) radar level transmitter for continuous monitoring of solids and liquids in vessels to a range of 100 m (329 ft)[1]. Radar level measurement uses the time of flight principle to determine distance to a material surface.

FMCW radar transmits a continuous wave. The frequency of the wave is constantly increasing: this is known as the sweep. By the time the first part of the wave has been reflected off the target and returned to the device, the part of the wave that is just being emitted is at a higher frequency. The difference in frequency between the transmitted and received signals is proportional to time of flight.

Electromagnetic wave propagation is virtually unaffected by temperature or pressure changes, or by changes in the vapor levels inside a vessel. Electromagnetic waves are not attenuated by dust.

SITRANS LR560 consists of an enclosed electronic circuit coupled to an antenna and process connection. The electronic circuit generates a radar signal (78 GHz) that is directed to the lens antenna.

The signal is emitted from the lens antenna, and the reflected echoes are digitally converted to an echo profile. The profile is analyzed to determine the distance from the sensor reference point[2] to the material surface. This value (sensor value) is used as a basis for calculating the display of material level and mA output.

[1] The microwave output level is significantly less than that emitted from cellular phones.

[2] See Dimension drawings (Page 139)

A.3 Process variables

The Process Variables are sensor value and measured value. Sensor value is the distance from the sensor reference point (flange face) to the material surface. The measured value can be either Level (distance from low calibration point to material surface), Distance (distance from sensor reference point to the material surface), or Space (distance from high calibration point to the material surface).

A.4 Echo processing

A.4.1 Process Intelligence

The signal processing technology embedded in Siemens radar level devices is known as **Process Intelligence**.

Process intelligence provides high measurement reliability regardless of the dynamically changing conditions within the vessel being monitored. The embedded Process Intelligence dynamically adjusts to the constantly changing material surfaces within these vessels.

Process Intelligence is able to differentiate between the true microwave reflections from the surface of the material and unwanted reflections being returned from obstructions such as seam welds or supports within a vessel. The result is repeatable, fast and reliable measurement. This technology was developed as result of field data gained over some twenty years from more than 1,000,000 installations in many industries around the world.

Higher order mathematical techniques and algorithms are used to provide intelligent processing of microwave reflection profiles. This "knowledge based" technique produces superior performance and reliability.

A.4.2 Echo selection

Time Varying Threshold (TVT)

A Time Varying Threshold (TVT) hovers above the echo profile to screen out unwanted reflections (false echoes).

In most cases the material echo is the only one which rises above the default TVT.

In a vessel with obstructions, a false echo may occur, see AUTO FALSE ECHO SUPPRESSION (2.4.8.1.) (Page 151) for more details.

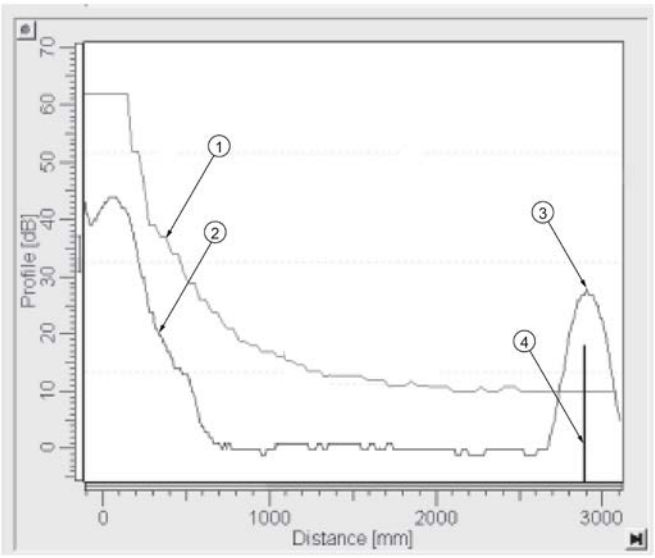

① default TVT
② echo profile
③ material level
④ echo marker

The device characterizes all echoes that rise above the TVT as potential good echoes. Each peak is assigned a rating based on its strength, area, height above the TVT, and reliability, amongst other characteristics.

ALGORITHM (2.4.5.1.) (Page 88)

The true echo is selected based on the setting for the Echo selection algorithm. For a list of options, see ALGORITHM (2.4.5.1.) (Page 88).

POSITION DETECT (2.4.5.2.) (Page 88)

The echo position detection algorithm determines which point on the echo will be used to calculate the precise time of flight, and calculates the range using the calibrated propagation velocity. The following options are available:

Rising: Uses rising edge of the echo.

Center: Uses center of the echo.

Hybrid: Uses the Center algorithm for the top part of the vessel, and the CLEF algorithm for the part nearest the vessel bottom, according to the setting for **CLEF range**.

CLEF (Constrained Leading Edge Fit)

- Uses the leading edge of the echo.
- Is used mainly to process the echo from materials with a low dK value.

In an almost empty flat-bottomed vessel, a low dK material may reflect an echo weaker than the echo from the vessel bottom. The echo profile shows these echoes merging. The device may then report a material level equal to or lower than empty.

The CLEF algorithm enables the device to report the level correctly.

Example: CLEF off: Position set to Hybrid

Vessel height: 1.5 m; CLEF range set to 0 (Center algorithm gives the same result.)

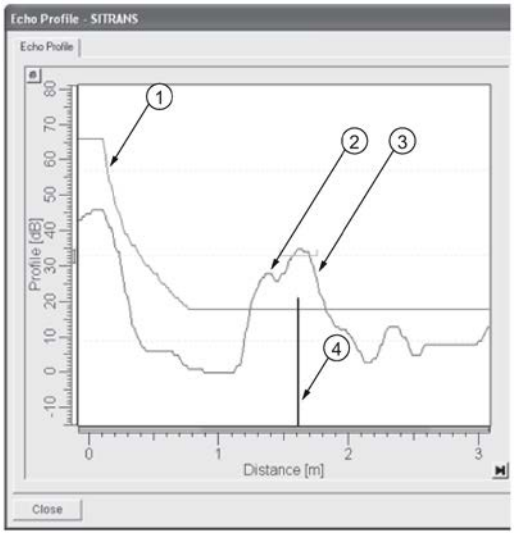

① default TVT
② material echo
③ vessel bottom echo selected
④ echo marker

Example: CLEF enabled

Vessel height: 1.5 m; CLEF range set to 0.5 m

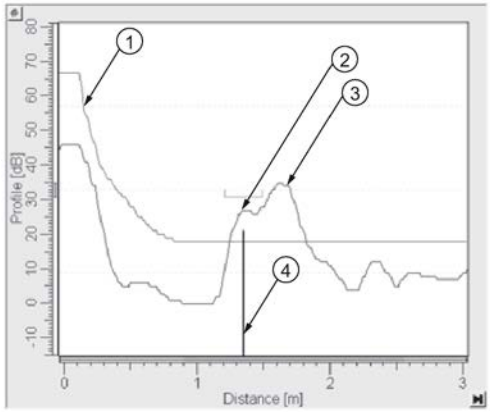

① default TVT
② material echo selected
③ vessel bottom echo
④ echo marker

A.4.3 CLEF RANGE (2.4.5.4.)

Determines the level below which the CLEF algorithm will be used. Above this level, the Center algorithm is used when Hybrid is selected in POSITION DETECT (2.4.5.2.) (Page 88). CLEF Range is referenced from FAR RANGE (2.4.2.) (Page 87).

A.4.4 ECHO THRESHOLD (2.4.5.3.)

CONFIDENCE (2.4.7.1.) (Page 91) describes the quality of an echo. Higher values represent higher quality. Echo Threshold defines the minimum confidence value required for an echo to be accepted as valid and evaluated.

A.4.5 ECHO LOCK (2.4.6.1.)

If the echo selected by ALGORITHM (2.4.5.1.) (Page 88) is within the Echo Lock window, the window is centered about the echo, which is used to derive the measurement. In radar applications, two measurement verification options are used:

Lock Off

SITRANS LR560 responds immediately to a new selected echo (within the restrictions set by the Maximum Fill / Empty Rate), but measurement reliability is affected.

Material Agitator

A new measurement outside the Echo Lock Window must meet the sampling criteria before the window will move to include it.
The other available options, **Maximum Verification** and **Total Lock** are not recommended for radar.

A.4.6 AUTO FALSE ECHO SUPPRESSION (2.4.8.1.)

Note

For detailed instructions on using this feature via the handheld programmer, see AFES WIZARD (1.2.) (Page 77).

Auto False Echo Suppression is designed to learn a specific environment (for example, a particular vessel with known obstructions), and in conjunction with Auto False Echo Suppression Range to remove false echoes appearing in front of the material echo.

The material level should be below all known obstructions at the moment when Auto False Echo Suppression learns the echo profile. Ideally the vessel should be empty or almost empty, and if an agitator is present, it should be running.

The device learns the echo profile over the whole measurement range and the TVT is shaped around all echoes present at that moment.

Auto False Echo Suppression Range

Auto False Echo Suppression Range specifies the range within which the learned TVT is applied. Default TVT is applied over the remainder of the range.

The learned TVT screens out the false echoes caused by obstructions. The default TVT allows the material echo to rise above it.

Auto False Echo Suppression Range must be set to a distance shorter than the distance to the material level when the environment was learned, to avoid the material echo being screened out.

Example before Auto False Echo Suppression

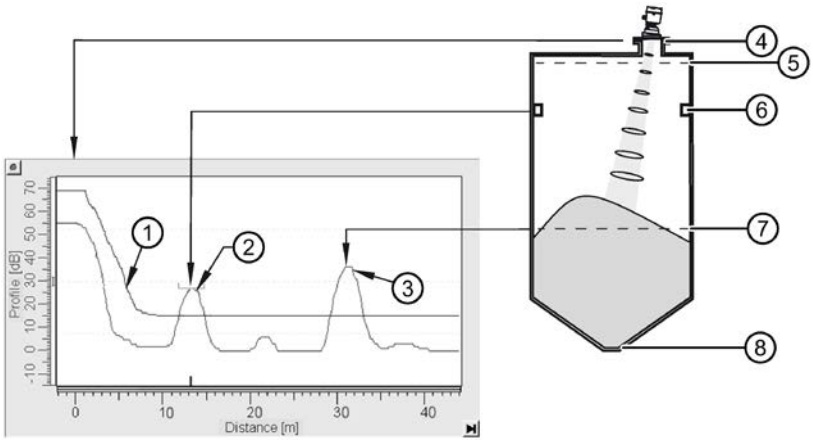

①	default TVT
②	false echo
③	material echo
④, ⑤	sensor reference point High Cal. Pt = 1 m
⑥	obstruction at 13 m
⑦	material level at 31 m
⑧	Low Cal. Pt. = 45 m

Example after Auto False Echo Suppression

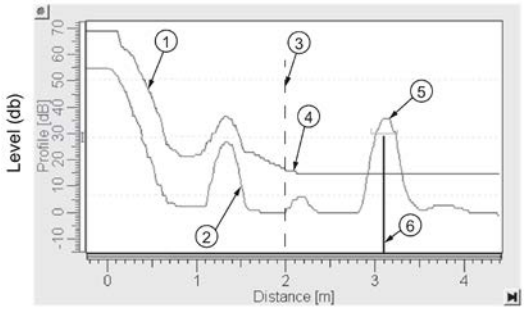

Auto False Echo Suppression Range set to 2 m

① Learned TVT

② False echo

③ Auto False Echo Suppression Range

A.4.7 Measurement range

NEAR RANGE (2.4.1.) (Page 87)

Near Range programs SITRANS LR560 to ignore the zone in front of the antenna. The default blanking distance is 27.8 cm (0.91 ft) from the sensor reference point.

Near Range allows you to increase the blanking value from its factory default. But AUTO ECHO SUPPRESSION (2.4.8.1.) (Page 92) is generally recommended in preference to extending the blanking distance from factory values.

FAR RANGE (2.4.2.) (Page 87)

Far Range can be used in applications where the base of the vessel is conical or parabolic. A reliable echo may be available below the vessel empty distance, due to an indirect reflection path.

Increasing Far Range to 30% or 40% can provide stable empty vessel readings.

A.5 Measurement response

Note

Units are defined in **Quick Start Wizard (1.1.)** and are in meters by default.

RESPONSE RATE (2.3.6.1.) (Page 85) limits the maximum rate at which the display and output respond to changes in the measurement. There are three preset options: slow, medium, and fast.

Once the real process fill/empty rate (m/s by default) is established, a response rate can be selected that is slightly higher than the application rate. Response Rate automatically adjusts the filters that affect the output response rate.

RESPONSE RATE (2.3.6.1.) (Page 85)		FILL RATE/MIN (2.3.6.2.) (Page 86)/EMPTY RATE/MIN (2.3.6.3.) (Page 86)	FILTER TIME CONSTANT (2.5.8.1.) (Page 97)
	Slow	0.1 m/min (0.32 ft/min)	600 s
Factory setting:	**Medium**	1.0 m/min (3.28 ft.min)	60 s
	Fast	10.0 m/min (32.8 ft/min)	0 s

A.6 Damping

FILTER TIME CONSTANT (2.5.8.1.) (Page 97) smooths out the response to a sudden change in level. This is an exponential filter and the engineering unit is always in seconds.

In 5 time constants the output rises exponentially: from 63.2% of the change in the first time constant, to almost 100% of the change by the end of the 5th time constant.

Damping example

time constant = 2 seconds

input (level) change = 2 m

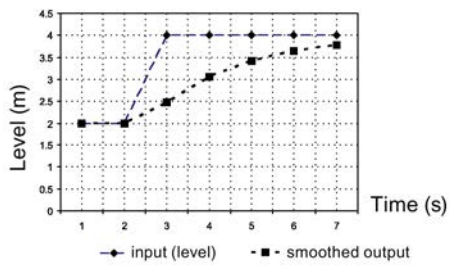

A.7 Loss of Echo (LOE)

A.7.1 Loss of Echo (LOE)

A loss of echo (LOE) occurs when the calculated measurement is judged to be unreliable because the echo confidence value has dropped below the echo confidence threshold.

CONFIDENCE (2.4.7.1.) (Page 91) describes the quality of an echo. Higher values represent higher quality.

ECHO THRESHOLD (2.4.5.3.) (Page 89) defines the minimum confidence value required for an echo to be accepted as valid and evaluated.

If the LOE condition persists beyond the time limit set in LOE TIMER (2.3.3.) (Page 83) the LCD displays the Service Required icon, and the text region displays the fault code **S: 0** and the text LOE.

If two faults are present at the same time, the fault code, error text, and error icon for each fault are displayed alternately. For example, Loss of Echo and Fail-safe.

S: 0 LOE

S: 52 Fail-safe

A.7.2 Fail-safe Behavior

The purpose of the Fail-safe setting is to put the process into a safe mode of operation in the event of a fault or failure. The value to be reported in the event of a fault is selected so that a loss of power or loss of signal triggers the same response as an unsafe level.

Fail-safe mode may be triggered by a loss of echo, a bad configuration, or certain device faults. You can select one of three possible values to be reported when a Fail-safe mode is activated.

A.7.3 Mode

MODE (2.5.9.1.) (Page 98) determines the material level to be reported when LOE TIMER (2.3.3.) (Page 83) expires.

MODE (2.5.9.1.) (Page 98)		
SUB VALUE		Use substitute value. VALUE (2.5.9.2.) (Page 99) used as output value.
LAST VALUE	*	Last value (Store last valid output value).
USE BAD VALUE		Use bad value (Calculated output value is incorrect).

A.7.4 Value

VALUE (2.5.9.2.) (Page 99) defines the material level to be reported if the option **Use substitute value** is selected in MODE (2.5.9.1.) (Page 98).

The two Analog Input Function blocks are set separately.

To set a user-defined value

- Navigate to **Level Meter > Setup > desired Analog Input (1 or 2).**
- Set MODE (2.5.9.1.) (Page 98) to **Use substitute value**.
- Go to **Value** and enter the desired value.

A.8 Loop power

A.8.1 Temperature De-Rating

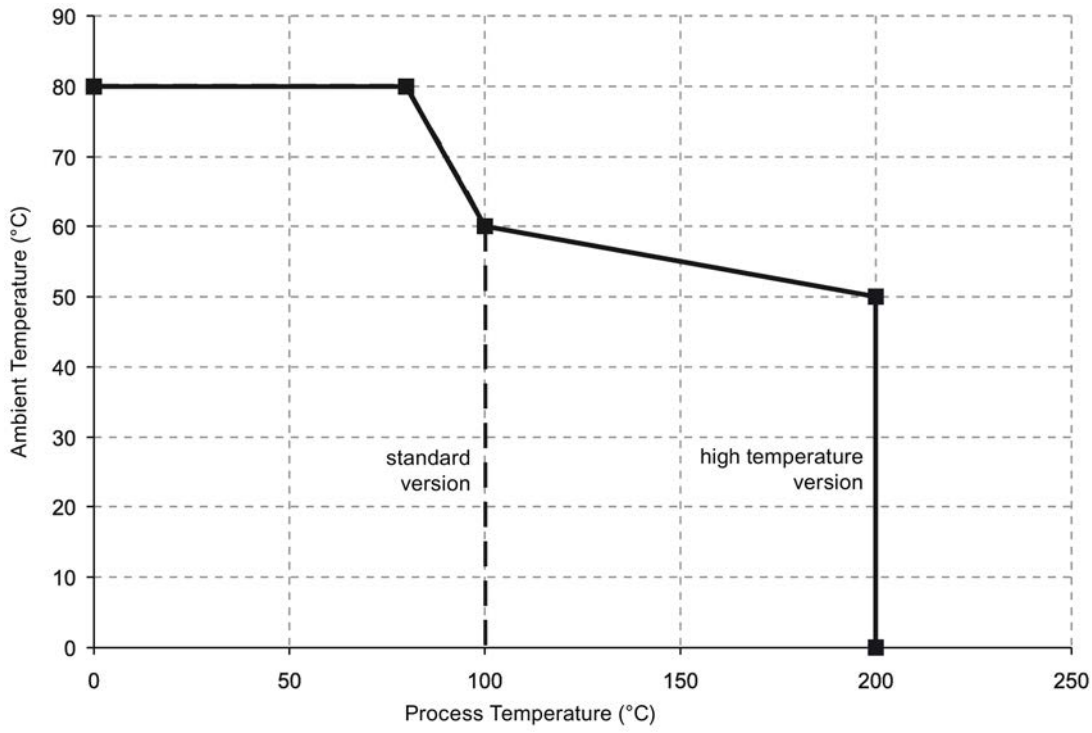

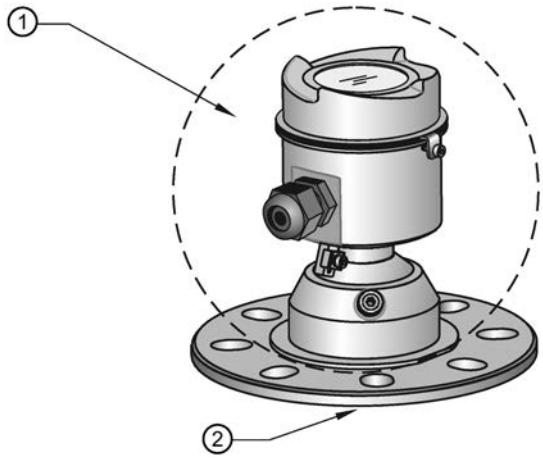

① ambient temperature
–40 °C to 80 °C
(–40 °F to 176 °F)

② process temperature:
–40 to +100 °C (–40 to +212 °F) or
–40 to +200 °C (–40 to +392 °F) depending on the version

PROFIBUS PA profile structure

B

B.1 PROFIBUS Level Device Design

The device follows the profile block model and is implemented as a Profile 3.01 PA device. Standard profile parameters are used to program the level transducer block.

B.2 Block Model

The Block Model represents how measured values are recorded and processed. All data is viewed from the perspective of the DCS or PLC, so information from the sensor is an input.

The functions of the device are divided into blocks with different areas of responsibility. The blocks are configured by parameters.

The device is implemented with one Physical Block, one Transducer Block (TB), and two Analog Input Function Blocks (AIFB1 and AIFB2).

Physical Block

The Physical Block handles functionality and descriptions relating to the device as a whole: for example, LCD Contrast (functionality) and Firmware Revision and Tag (descriptions).

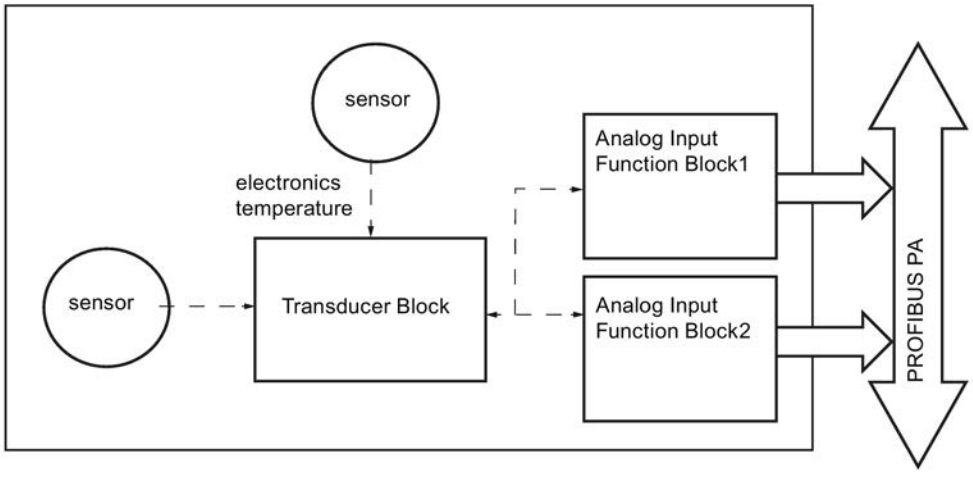

Transducer Block (TB)

The Transducer Block carries out adjustments to the sensor, such as level calibration and volume calibration. It supplies the measurement value [Primary Value (PV), Secondary Value 1 (SV1), or Secondary Value 2 (SV2)] utilized by either or both of the AIFBs.

Analog Input Function Blocks AIFB1 and AIFB2

The two AIFBs are completely independent of each other. They utilize the measurement value output from the Transducer Block [Primary Value (PV), Secondary Value 1 (SV1), or Secondary Value 2 (SV2)] and apply any required quality checks, scaling, and Fail-safe operation selections. The Analog Input Function Block output supplies the measured value and associated status information to the PROFIBUS PA network via cyclic data transfer.

B.3 Transducer Block function groups

The figure below shows the signal flow of measured values from the sensor through the Transducer Block into the output value:

- Primary Value (PV)[1]: Level or Volume
- Secondary Value 1 (SV1): Level
- Secondary Value 2 (SV2): Distance

The Transducer Block implements all of the basic parameters of the PROFIBUS profile standard (illustrated in step 2 below).

Transducer Block

[1] PV output is provided for PROFIBUS Profile for Process Devices 3.01 compatibility.

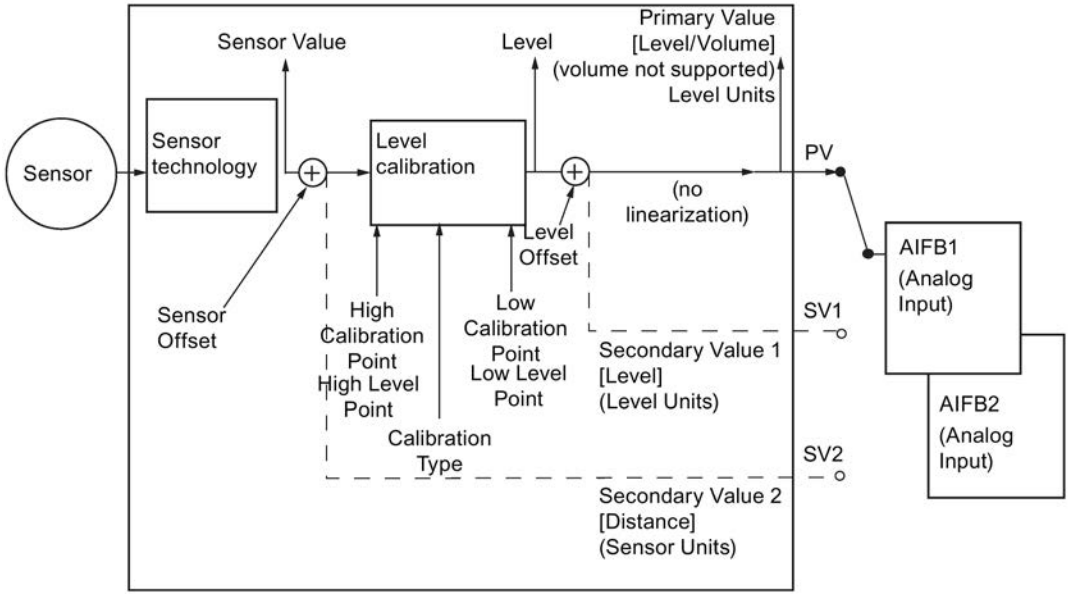

B.4 How the transducer block works:

The sensor technology sub-block selects the proper echo. For an explanation of sensor technology, see Technical reference (Page 147).

The sensor value (in sensor units) is checked to see if it is within its measuring limits. If the limit is exceeded, this results in a **Bad** status and the error message **Failure in measurement**. The sensor value is stored in Sensor Value.

The analog signal from the sensor is transformed into a digital representation.

A Sensor Offset (default 0) compensates for changes to the sensor reference point, if necessary.

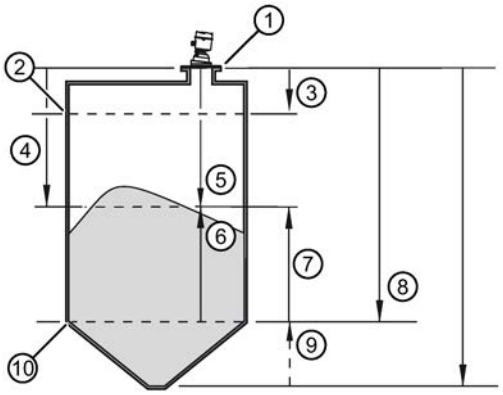

①	Sensor reference point (flange face)	②	High level point (default: 100%)
③	High calibration point	④	Distance/SV2
⑤	Sensor value [1]	⑥	Level/PV
⑦	Level /SV1	⑧	Low calibration point
⑨	Level offset [2](if used)	⑩	Low level point (default: 0%)

The Transducer Block provides three possible outputs:

- Primary Value (PV) / Level (level units)[3]
- Secondary Value 1 (SV1) / Level (level units)
- Secondary Value 2 (SV2) / Distance (sensor units)

[1] SENSOR OFFSET (2.3.5.3.) (Page 84) is a constant offset (negative or positive) that can be added to sensor value to compensate if the sensor has been changed.

[2] Level Offset (default O) can compensate for specific vessel configurations.

[3] LR560 PA does not support Volume.

B.5 Analog Input Function Blocks 1 and 2

The input to the AIFB is a value with a status. See Transducer Block function groups (Page 159) for a graphic representation.

B.6 Output conversion

The Analog Input Function Blocks can modify the output value.

Scaling

Output Scaling (2.6.6.) allows you to scale the output to any desired units.

Fail-safe

If the status of the input (TB output value or Simulation Value) is **bad**, the fault logic can output either the last usable measured value, or a given substitute value. Set **Fail-safe Mode (2.6.9.)** and, if desired, define a value in **Value (2.6.9.2.)**.

B.7 Device/input simulation

You can define a simulated value to be input to the AIFB instead of the output value from the Transducer Block. The simulated value allows the AIFB to be tested independently of the characteristics of the environment.

Actual Mode: Device / Output Simulation

Actual Mode allows you to select one of three possible outputs.

Actual Mode (2.6.2.)	Description	Output value
AUTO	automatic	the automatically-recorded measured value
MAN	manual	a manually-set fixed simulation value
O/S	function block disabled	the preset safety value.

B.8 Analog Input Function Block function groups (simulation, mode and status)

Measured values are processed within an Analog Input Function Block to produce the device output. See AIFB function groups (Page 162). The output is communicated via cyclic transfer to PROFIBUS PA and displayed on the LCD.

B.9 How an Analog Input Function Block works

The AIFB provides a linear conversion to any desired units.

1. The AIFB Input value is the processed output value of the Transducer Block, in Transducer Block units.
2. The user selects the desired AIFB output units and scaling is applied.

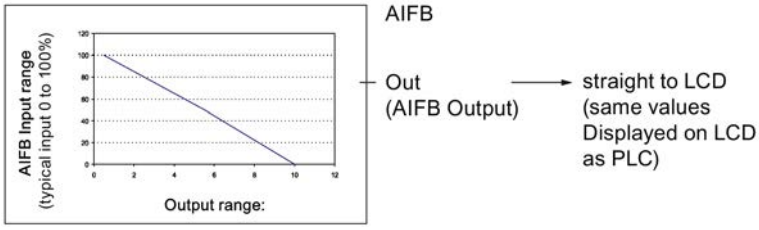

3. Damping may be applied based on a time constant provided by the user. See Damping (Page 154) for details.
4. The status of the input value from the Transducer Block is checked. If the status is Bad, a Fail-safe condition occurs. The output is determined by the setting for Failsafe Mode.
5. **Actual Mode (2.6.2.)** allows the entire AI block to be overridden by a Manual Output value. See **Actual Mode (2.6.2.)** for details.
6. The value is checked against the user-defined warning and alarm limits. The upper and lower limits are defined in units corresponding to the Output range, and a limit hysteresis can be used to adjust the sensitivity. See **Alarms and Warnings (2.6.7.)** for details.
7. The output value (OUT) is communicated via cyclic data transfer.

B.10 AIFB function groups

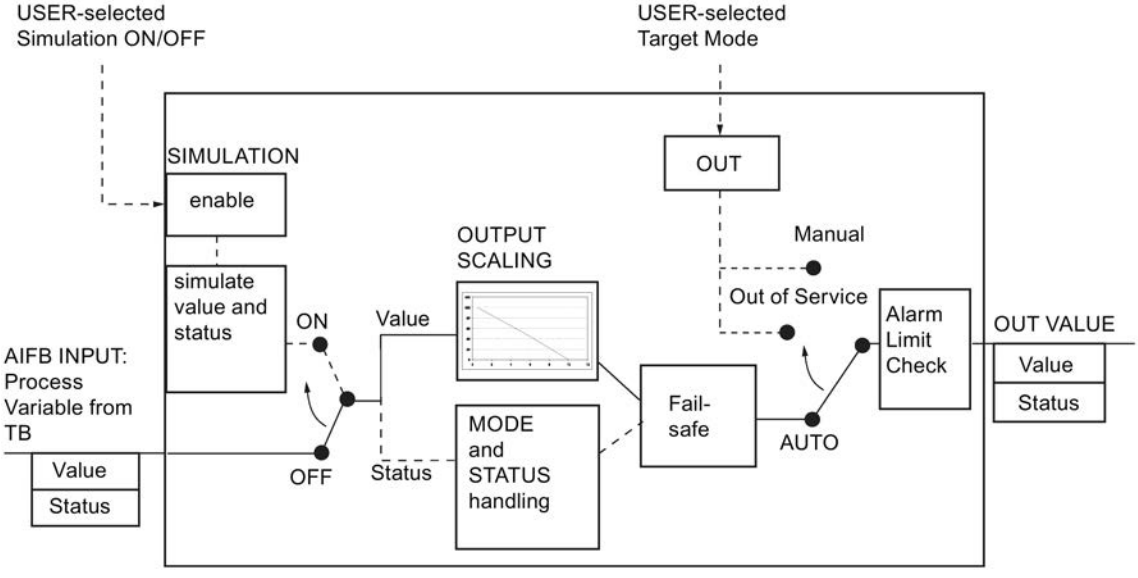

Communications via PROFIBUS PA

C

SITRANS LR560 (PROFIBUS PA) is a Profile Version 3.01, PA device. It supports Class 1 Master for cyclic and acyclic data exchange, and Class 2 for acyclic services. The full range of SITRANS LR560 functions is available only over a PROFIBUS PA network.

PROFIBUS PA is an open industrial protocol. Full details about PROFIBUS PA can be obtained from PROFIBUS International at www.profibus.com (www.profibus.com).

C.1 Device configuration tool

To use PROFIBUS PA, you will need a PC configuration tool: we recommend SIMATIC PDM. Please consult the operating instructions or online help for details on using SIMATIC PDM. You can find more information at:

www.fielddevices.com (www.fielddevices.com)

C.2 SIMATIC PDM

SIMATIC PDM is a software package used to commission and maintain SITRANS LR560 and other process devices. For more detail see Functions in SIMATIC PDM (Page 53).

C.3 Electronic Device Description

In order to use **Process Device Manager (PDM)** with PROFIBUS PA, you will need the Electronic Device Description for SITRANS LR560. For details see SIMATIC PDM Version (Page 53).

C.4 Network configuration

To configure a PROFIBUS PA Class 1 Master (for example, a PLC), you will need a **GSD** file.

C.5 The GSD file

The GSD file SIEM816B.gsd is available from the SITRANS LR560 product page on our website (www.siemens.com/LR560) under **Support > Software Downloads.**

C.6 Bus termination

Note

PROFIBUS PA cable shield MUST be terminated at both ends of the cable for it to work properly. Please refer to the PROFIBUS PA User and Installation Guidelines (order number 2.092), available from:

www.profibus.com (www.profibus.com)

C.7 Power demands

To determine how many devices can be connected to a bus line, calculate the combined maximum current consumption of all the connected devices: 13.5 mA for SITRANS LR560. Allow a current reserve for safety.

C.8 PROFIBUS address

A unique PROFIBUS address identifies each device on the network. To set the PROFIBUS address see DEVICE ADDRESS (5.1.) (Page 121).

Note

It is possible to change the device address via a Class 1 master (for example, a PLC) or via a Class 2 master (for example PDM).

Resetting the PROFIBUS address to 126

- Via SIMATIC PDM:

1. Open the menu **Device – Master Reset** and click on **Reset Address to 126**.
2. Click on OK: the address will be reset to 126, and if the address lock was on, it will be disabled.

- Via the handheld programmer:

1. Navigate to Service (4.) **>** Master Reset (4.1.) (You can enter the numeric value instead of navigating via the Arrow keys.)
2. Press **RIGHT Arrow** to open Edit Mode then scroll down to **DEV ADDRESS** and press **RIGHT Arrow** to select it. The address will be reset to 126, and if the address lock was on, it will be disabled.
3. Press **LEFT Arrow** to exit.

C.9 Operating as a profile device

Every manufactured PROFIBUS product has a unique PROFIBUS identification number which identifies it to the system. PROFIBUS Profile Standard version 3.01 also defines a Profile Model which can identify a product as a generic profile device on the network.

SITRANS LR560 can be identified in one of three ways:

	Device Identification	Profile Model
	STD PROFILE	Standard Profile (uses generic GSD for 2 AIFB [ident # = 0x9701]
*	MANUFACTURER	Manufacturer-specific (uses Siemens EDD and GSD file, which identifies the LR560 [PROFIBUS PA]) [ident # = 0x8150]
	STD – AIFB 1 ONLY	Standard Profile AIFB 1 only (uses generic GSD for 1 AIFB) [ident # = 0x9700]

Defining the device as Profile-specific as opposed to Manufacturer-specific makes it possible to exchange the device for any other device of the same profile type without changing the GSD file.

To set up SITRANS LR560 as a profile device see PROFIBUS IDENTIFICATION (5.2.) (Page 121).

C.10 Configuring a new device

See Configuring a new device (Page 54).

C.11 Configuring PROFIBUS PA with an S7-300/ 400 PLC

1. If SITRANS LR560 is not listed in the STEP 7 device catalog, you can download theGSD file from the Siemens Web site and import it into Step 7. Go to LR560 (www.siemens.com/LR560), and click Downloads.
2. Add the SITRANS LR560 "rack", click and drag the SITRANS LR560 folder from the hardware catalog.
3. Fill the rack with the necessary modules by dragging and dropping them from the hardware catalog.
4. After configuring PROFIBUS PA in steps 2 and 3, download it to the PLC.
5. Add code to the PLC program to read data consistently using the SFC14.

C.12 Cyclic versus acyclic data

When you request data from a device via PROFIBUS PA, you have two choices. Cyclic data is provided at every bus scan: acyclic data is requested and provided as needed.

Input information is always requested at every bus scan and is set up as cyclic data. Configuration information is only needed periodically and is set up as acyclic data.

C.13 Cyclic data

When you configure SITRANS LR560 on the PROFIBUS PA bus, there are two slots available for modules.

Note

Each of the slots has to have a module defined in it.

Slot 0 always transmits **AIFB1** information[1]. Slot 1 defaults to Free Place, but can be changed to **AIFB2** information. If you do not wish to have data transmitted, then you must use a **Free Place** module in that slot.

Each of the two Analog Input Function Blocks can be set up to return **Level,** or **Distance**. Within the function blocks, the values are scaled according to the user requirements, see Analog Input Function Blocks 1 and 2 (Page 160) for details.

AIFB1 and **AIFB2** return 5 bytes of data each:

	Floating Point				Status
AIFB1	byte 1	byte 2	byte 3	byte 4	byte 5
AIFB2	byte 6	byte 7	byte 8	byte 9	byte 10

The first 4 bytes are the floating point representation (IEEE) of the variable. The variables are the outputs of the function block. The 5th byte is the status word and the list of possible values is given in the chart below.

The 5 bytes must be read consistently, in a contiguous chunk: they cannot be read byte by byte, and cannot suffer an interrupt. If you are using an S7-300 / 400, you will need to use SFC14 DPRD_DAT: Read Consistent Data of a Standard PD Slave.

1) For more information, refer toAnalog Input Function Block function groups (simulation, mode and status) (Page 161).

C.14 Status byte

In PROFIBUS PA there are two possible types of status byte:

- **status byte**: originally defined in Profile Standard V3.0
- **condensed status**: an alternative status byte defined in Profile Standard V3.01

You can choose which type of status byte will be returned, by enabling or disabling **Condensed Status (3.4.)**: see **Enable (3.4.1.)** for details. When Condensed Status is disabled, Status Byte will be returned, and the following codes will be used.

Status Codes for good quality	
Values in hex notation	Description
0x80	Data is GOOD.
0x84	A parameter in the function block has been changed: status active for 10 s
0x89	Active low warning.

Status Codes for good quality	
Values in hex notation	Description
0x8A	Active high warning.
0x8D	Active low alarm.
0x8E	Active high alarm.

Status Codes for Uncertain Quality	
Values in hex notation	**Description**
0x4B	Value is a substituted value (normally used in Failsafe).
0x4C/0x4F	Initial value.
0x47	Last usable value.

Status Codes for Bad Quality	
Values in hex notation	Description
0x10	The LOE timer has expired: this could be caused by LOE or by a sensor malfunction: value is BAD.
0x01	There is an error in the configuration of the function blocks in PROFIBUS PA [a].
0X1F	The function block, or the transducer block, has been placed out of service.

[a] This could happen when a firmware download has been done, but a system reset has not been done. This could also happen if the function blocks are not configured properly using the handheld programmer, PDM or acyclic services.

C.15 Condensed status

These codes are available when Condensed Status is enabled. See **Condensed Status (3.4.)** for more details.

Condensed Status (GOOD)		
Hex value	Status - GOOD	Description
0x80	GOOD – ok	No error or special condition is associated with this value.
0x84	GOOD – update event	Set if the value is good and the block has an active Update event. (This status remains active for 20 seconds.)
0x86	GOOD – active advi-sory alarm	Set if the value is good and the block has an active Alarm.
0x80 ...0x8E	GOOD – limit check/ update event	See Status Codes for Good Quality (Page 166).

Condensed Status (GOOD)		
Hex value	Status - GOOD	Description
0xA0 ...0xA3	GOOD – initiate fail safe	This fault is not generated by the product, but can be simulated.
0xA4 ...0xA7	GOOD – maintenance required	Value is valid. Maintenance is recommended within a medium-term period.
0xA8 ...0xAB	GOOD – maintenance demanded	Value is valid. Maintenance is demanded within a short- term period.
0xBC ...0xBF	GOOD – function check	Device performs internal function check without influencing the process. Value is valid.

Condensed Status (UNCERTAIN)		
Hex value	Status - UNCERTAIN	Description
0x45	UNCERTAIN – substitute set	Output of Failsafe logic only.
0x4F	UNCERTAIN – initial value	Default value as long as no measured value is available or until a diagnosis is made that affects the value and the status accorded to it.
0x68 ...0x6B	UNCERTAIN – maintenance demanded	Usability of the process value depends on the application. Value is potentially invalid. Cause can be determined by reading the extended diagnostics [a)]. Maintenance is demanded within a short-term period.
0x73	UNCERTAIN – simulated value, start	Indicates the start of a simulation. Simulation of a measured value or Input FB mode changes from AUTO to MAN. • This status remains active for at least 10 seconds: – after enabling simulation – after setting the FB to MAN mode – after a restart (e.g. power down cycle) if the simulation is enabled or the FB is in MAN mode – after passivation is cleared if simulation is enabled or the FB is in MAN mode • In MAN mode the status remains until a subsequent write command overwrites the OUT value after the 10 seconds have expired. • In simulation mode the written status is buffered and appears in the value flow after 10 seconds. However the new written SIMULATE parameter with its status can be read before the 10 seconds have expired.
0x74 ...0x77	UNCERTAIN – simulated value, end	Indicates the end of a simulation. Simulation of a measured value is disabled or Input FB mode changes from MAN to AUTO. This Status remains active for 10 seconds after simulation ends. While this status is active there is no reliable process value. Measured values and their status are updated afterwards.

See Acyclic Extended Diagnostics (General Fault Codes) (Page 172).

Condensed Status (BAD)		
Hex value	Status - BAD	Description
0x00	BAD – non specific	Proxy determines that a device does not communicate.
0x23	BAD – passivated (diagnostics alerts disabled)	Configured failsafe value is used, accompanied by this status.
0x24 ...0x27	BAD – maintenance alarm, more diagnosis available	No measurement available because of a failure.
0x25	BAD – process related, no maintenance	No measurement available because of invalid process conditions.
0x3C ...0x3F	BAD – function check / local override, value not usable	Occurs during cleaning or calibration process.

C.16 Diagnostics

All diagnostic information shown below is viewable via PDM.

C.17 Diagnosis reply (available cyclically)

During DPV0 data exchange, the PROFIBUS PA slave will notify the Master when a serious error occurs. The Master will then send a Diagnosis request. The reply to this request is normally logged in the PLC and is referred to as the "Hex values."

The reply may contain two parts. The first part is 6 bytes long and is defined by the PROFIBUS standard. If there is a second part, it is called the ’extended cyclic diagnosis’ and it is 8 bytes long. The last 4 bytes of the extended diagnostic message give the error diagnosis, see Extended Mode Diagnosis (Page 170) and Condensed Mode Diagnosis (Page 171).

The same information is also available acyclically via the Diagnosis Object.

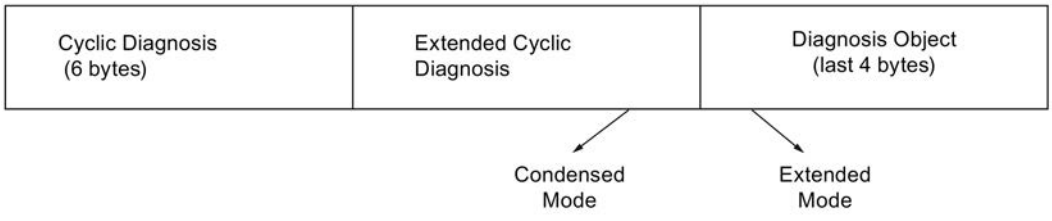

C.18 Diagnosis object (available cyclically or acyclically)

This consists of four bytes.

In PROFIBUS PA there are two options for the Diagnosis Object:

- Extended Mode Diagnosis (Page 170)
- Condensed Mode Diagnosis (Page 171)

You can choose which of these will be returned, by enabling or disabling Condensed Status. See **Enable (3.4.1.)**. When Condensed Status is disabled **Extended Mode Diagnosis** will be returned, and the following codes will be used.

C.19 Extended mode diagnosis

Extended Mode Diagnosis				
Hex values	Byte	Bit	Description	Indication class [a)]
0x01000000	0	0	Electronics failure	R
0x02000000		1	Mechanical failure	R
0x04000000		2	Motor Temperature too high	R
0x08000000		3	Electronics temperature too high	R
0x10000000		4	Memory error	R
0x20000000		5	Measurement failure	R
0x40000000		6	Device not initialized (no calibration)	R
0x80000000		7	Self calibration failed	R
0x00010000	1	0	Zero point error (limit position)	R
0x00020000		1	Power supply failure (electrical, pneumatic)	R
0x00040000		2	Configuration invalid	R
0x00080000		3	New startup carried out (Warm Start)	A
0x00100000		4	Restart carried out (Cold Start)	A
0x00200000		5	Maintenance required	R
0x00400000		6	Characterization invalid	R
0x00800000		7	Set to 1 (one), if the Ident_Number of the running cyclic data transfer and the value of Physical Block IDENT__NUMBER_SELECTOR parameter are different.	R
	2	0 to 7	Reserved for use within the PNO	
	3	0 to 6	Reserved for use within the PNO	
0x00000080		7	More diagnosis information is available	

[a)] **R** indicates the message remains active as long as the reason for the message exists.
A indicates the message will automatically reset after 10 seconds.

Values of the DIAGNOSIS bit: **0** = not set; **1** = set

C.20 Condensed mode diagnosis

Condensed Mode Diagnosis				
Hex values	Byte	Bit	Description	Indication class [a)]
0x01000000	0	0	Electronics failure	R
0x02000000		1	Mechanical failure	R
0x04000000		2	Motor Temperature too high	R
0x08000000		3	Electronics temperature too high	R
0x10000000		4	Memory error	R
0x20000000		5	Measurement failure	R
0x40000000		6	Device not initialized (no calibration)	R
0x80000000		7	Self calibration failed	R
0x00080000	2	3	New startup carried out (Warm Start)	R
0x00100000		4	Restart carried out (Cold Start)	R
0x00200000		5	Maintenance required	R
0x00400000		6	Reserved for use within the PNO	A
0x00800000		7	Set to 1 (one), if the Ident_Number of the running cyclic data transfer and the value of Physical Block IDENT__NUMBER_SELECTOR parameter are different.	A
0x00010000	3	0	Failure of the device or armature	R
0x00020000		1	Maintenance demanded	R
0x00040000		2	Device is in function check mode, or simulation, or under local control e.g. maintenance	R
0x00080000		3	The process conditions do not allow the return of valid values. (Set if a value has the quality Uncertain - Process related, no maintenance or Bad - Process related, no maintenance.)	R
		4 to 7	Reserved for use within the PNO	
	4	0 to 6	Reserved for use within the PNO	
0x80000000		7	0: There is no more information available 1: More diagnosis information is available in DIAGNOSIS_EXTENSION	

[a)] **R** indicates the message remains active as long as the reason for the message exists. **A** indicates the message will automatically reset after 10 seconds.

C.21 Acyclic extended diagnostics (general fault codes)

In addition to the extended diagnostics available by cyclic data exchange (shown above), further extended diagnostics are available via acyclic communications. This consists of six bytes. See Diagnosis reply (available cyclically) (Page 169) for information on the location of the **Extended Diagnostics.**

Note

Certain fault codes (identified by an asterisk [*] in the table below) will persist until a manual reset has been performed [see **Fault Reset (3.2.)**].

Acyclic Extended Diagnostics /General Fault Codes					
LCD display		Meaning	Corrective Action	Byte	Bit
S:0		The device was unable to get a measurement within the Failsafe LOE Timer period. Possible causes: faulty installation, antenna material buildup, foaming/other adverse process conditions, invalid calibration range.	• Ensure installation details are correct. • Ensure no antenna material buildup. Clean if necessary. • Adjust process conditions to minimize foam or other adverse conditions. • Correct range calibration. • If fault persists, contact your local Siemens representative.	0	0
S:2		Unable to collect profile because of a power condition that is outside the operating range of the device.	Repair required. Contact your local Siemens representative.		2
S:3		Device is nearing its lifetime limit according to the value set in Maintenance Required Limit.	Replacement is recommended.		3
S:4		Device is nearing its lifetime limit according to the value set in Maintenance Demanded Limit.	Replacement is recommended.		4
S:6		Sensor is nearing its lifetime limit according to the value set in Maintenance Required Limit.	Replacement is recommended.		6
S:7		Sensor is nearing its lifetime limit according to the value set in Maintenance Demanded Limit.	Replacement is recommended.		7
S:8		Service interval as defined in Maintenance Required Limit has expired.	Perform service	1	0
S:9		Service interval as defined in Maintenance Demanded Limit has expired.	Perform service.		1
S:10		Input parameters High Calibration Point and Low Calibration Point are the same.	• Check calibration settings of device. • Ensure settings for High Calibration Point and Low Calibration Point are different.		3
S:11		Internal temperature sensor failure.	Repair required. Contact your local Siemens representative.		4
S:12	*	Internal temperature of the device has exceeded specifications: it is operating outside its temperature range.	• Relocate device and/or lower process temperature enough to cool device. • Inspect for heat-related damage and contact your local Siemens representative if repair is required. • Fault code will persist until a manual reset is performed using PDM or the LCD interface.		5

S:14		Upper and lower input values (Process Value Scale) for AIFB1 are the same.	• Check configuration for AIFB1. • Ensure that Upper Value and Lower Value (Process Value Scale) are not the same.		6
S:15		Upper and lower input values (Process Value Scale) for AIFB2 are the same.	• Check configuration for AIFB2. • Ensure that Upper Value and Lower Value (Process Value Scale) are not the same.		7
S:17		Calibration interval as defined in Maintenance Required Limit has expired.	Perform calibration.	2	1
S:18		Calibration interval as defined in Maintenance Demanded Limit has expired.	Perform calibration.		2
S:28		Internal device failure caused by a RAM memory error.	Repair required: contact your local Siemens representative.	3	4
S:29		EEPROM damaged.	Repair required: contact your local Siemens representative.		5
S:31		Flash error.	Repair required: contact your local Siemens representative.		7
S:32		IDENT number conflict.	Ensure value of the Ident number selector is correct for the network configuration. If it is correct, the device needs to be re-parameterized by the PLC.	4	0
S:33		Factory calibration for the internal temperature sensor has been lost.	Repair required: contact your local Siemens representative.		1
S:34		Factory calibration for the device has been lost.	Repair required: contact your local Siemens representative.		2
S:35		Factory calibration for the device has been lost.	Repair required: contact your local Siemens representative.		3
S:36		Unable to start microwave module.	Cycle power. If fault persists, contact your local Siemens representative.		4
S:37		Measurement hardware problem.	Cycle power. If fault persists, contact your local Siemens representative.		5
S:38		Microwave module hardware failure: unable to calculate distance measurement.	Cycle power. If fault persists, contact your local Siemens representative.		6
S:43		Factory calibration for the radar receiver has been lost.	Repair required: contact your local Siemens representative.	5	3

C.22 Acyclic data

SITRANS LR560 supports up to four simultaneous connections by a Class 2 Master (C2 connection). It supports one connection by a Class 1 Master (C1 connection).

In order for a Class 1 Master to read parameters from a device, it needs to know the slot and absolute index of the parameter. You can download an application guide 'Reading acyclic data from a Siemens level measuring instrument' from our website (www.siemens.com/LR560) under **Support**.

Certificates and Support

D

D.1 Technical support

Technical support

If this documentation does not provide complete answers to any technical questions you may have, contact Technical Support at:

- Support request (http://www.siemens.com/automation/support-request)
- More information about our Technical Support is available at Technical Support (http://www.siemens.com/automation/csi/service)

Internet Service & Support

In addition to our documentation, Siemens provides a comprehensive support solution at:

- Services & Support (http://www.siemens.com/automation/service&support)

Personal contact

If you have additional questions about the device, please contact your Siemens personal contact at:

- Partner (http://www.automation.siemens.com/partner)

To find the personal contact for your product, go to "All Products and Branches" and select "Products & Services > Industrial Automation > Process Instrumentation".

Registered business address: Siemens AG, DE-76181, Karlsruhe, Germany

Documentation

You can find documentation on various products and systems at:

- Instructions and manuals (http://www.siemens.com/processinstrumentation/documentation)

D.2 QR code label

A QR code label can be found on the device. With the use of a smart phone, the QR code provides a direct link to a website with information specific to the device, such as manuals, FAQs, certificates, etc.

D.3 Certificates

You can find certificates on the Internet at LR560 (www.siemens.com/LR560) or on an included DVD.

HMI menu structure

E

E.1 HMI menu

- 1. QUICK START
  - 1.1 QUICK START WIZ.
  - 1.2 AFES WIZARD
  - 1.3 CPY PAR TO DISPL.
  - 1.4 CPY PAR FROM DIS.
  - 1.5 CPY FW TO DISPL.
  - 1.6 CPY FW FROM DIS.
- 2. SETUP
  - 2.1 IDENTIFICATION
    - 2.1.1 TAG
    - 2.1.2 DESCRIPTOR
    - 2.1.3 MESSAGE
    - 2.1.4 INSTAL. DATE
  - 2.2 DEVICE
    - 2.2.1 HARDWARE REV
    - 2.2.2. FIRMWARE REV
    - 2.2.3 LOADER REV
    - 2.2.4 MENU TIMEOUT
    - 2.2.5 MANUF. DATE
  - 2.3 SENSOR
    - 2.3.1 UNIT
    - 2.3.2 LEVEL UNIT
    - 2.3.3 LOE TIMER
    - 2.3.4 TEMP UNITS
    - 2.3.5 CALIBRATION
      - 2.3.5.1 LOW CALIB. PT.
      - 2.3.5.2 HIGH CALIB. PT.
      - 2.3.5.3 SENSOR OFFSET
      - 2.3.5.4 LOW LEVEL POINT
      - 2.3.5.5 HIGH LEVEL POINT
      - 2.3.5.6 LEVEL OFFSET
    - 2.3.6 RATE
      - 2.3.6.1 RESPONSE RATE
      - 2.3.6.2 FILL RATE/MIN

2.3.6.3 EMPTY RATE/MIN

2.4 SIGNAL PROC.

2.4.1 NEAR RANGE

2.4.2 FAR RANGE

2.4.3 MIN. SENSOR VAL.

2.4.4 MAX. SENSOR VAL.

2.4.5 ECHO SELECT

2.4.5.1 ALGORITHM

2.4.5.2 POS. DETECT

2.4.5.3 ECHO THRESHOLD

2.4.5.4 CLEF RANGE

2.4.5.5 ECHO MARKER

2.5 AIFB 1

2.5.1 STATIC REV. NO.

2.5.2 MODE

2.5.3 CHANNEL

2.5.4 LABEL

2.5.5 INPUT SCALING

2.5.5.1 UPPER VALUE

2.5.5.2 LOWER VALUE

2.5.6 OUTPUT SCALING

2.5.6.1 UPPER VALUE

2.5.6.2 LOWER VALUE

2.5.7 ALARMS & WARN..

2.5.7.1 HI LIMIT ALARM

2.5.7.2 HI LIMIT WARN

2.5.7.3 LO LIMIT WARN

2.5.7.4 LO LIMIT ALARM

2.5.7.5 LIMIT HYSTERESI.

2.5.8 DISPLAY

2.5.8.1 FILTER TIME CONS..

2.5.8.2 UNIT

2.5.8.3 OUT UNIT TEXT

2.5.8.4 DECIMAL POINT

2.5.9 FAIL-SAFE MODE

2.5.9.1 MODE

2.5.9.2 VALUE

2.6 AIFB2

2.6.1 STATIC REV. NO.

2.6.2 MODE

2.6.3 CHANNEL

2.6.4 LABEL
2.6.5 INPUT SCALING
2.6.6 OUTPUT SCALING
2.6.7 ALARMS & WARN..
2.6.8 DISPLAY
2.6.9 FAIL-SAFE MODE
2.7 MEAS. VALUES
2.7.1 MAIN OUTPUT
2.7.2 O/P NO LINEAR
2.7.3 O/P NO OFFSETS
2.8 FILTERING
2.8.1 NARROW ECHO FIL..
2.8.2 REFORM ECHO
2.8.3 AVG AMOUNT
3. DIAGNOSTICS
3.1 ECHO PROFILE
3.2 FAULT RESET
3.3 TREND
3.4 ELECT. TEMP.
3.4.1 MIN. VALUE
3.4.2 MAX. VALUE
3.4.3 INTERN. TEMP.
3.5 COND. STAT.
3.5.1 ENABLE
3.5.2 FEAT. SUPPORTED
3.5.3 FEAT. ENABLED
3.6 ALLOCATION
3.6.1 EVENT INDEX
3.6.2 EVENT STAT.
3.6.3 EVENT DIAG.
3.7 PEAK VALUES
3.7.1 MIN. MEAS. VALUE
3.7.2 MAX. MEAS. VALUE
3.7.3 MIN. OUTPUT FB1
3.7.4 MAX. OUTPUT FB1
3.7.5 MIN OUTPUT FB2
3.7.6 MAX. OUTPUT FB2
4. SERVICE
4.1 DEMO MODE
4.2 MASTER RESET
4.3 POWERED HOURS

4.4 POWERON RESETS
4.5 LCD BACKLIGHT
4.6 LCD CONTRAST
4.7 REMAIN. DEV. LIFE
    4.7.1 LIFETIME EXPECT.
    4.7.2 TIME IN OPER.
    4.7.3 REMAIN. LIFETIM.
    4.7.4 REMINDER ACTIV.
    4.7.5 REMIND. 1 (REQ)
    4.7.6 REMIND. 2 (DEM)
    4.7.7MAINT STAT
    4.7.8ACK STATUS
    4.7.9 ACK
4.8 REMAIN. SENS. LIFE
    4.8.1 LIFETIME EXPECT.
    4.8.2 TIME IN OPER.
    4.8.3 REMAIN. LIFETIM.
    4.8.4 REMINDER ACTIV.
    4.8.5 REMIND. 1 (REQ)
    4.8.6 REMIND. 2 (DEM)
    4.8.7 MAINT STAT
    4.8.8 ACK STATUS
    4.8.9ACK
4.9 SERVICE SCHED.
    4.9.1 SERV. INTERVAL
    4.9.2 TIME LAST SERV.
    4.9.3 TIME NEXT SERV.
    4.9.4 REMINDER ACTIV.
    4.9.5 REMIND. 1 (REQ)
    4.9.6 REMIND. 2 (DEM)
    4.9.7 MAINT STAT
    4.9.8 ACK STATUS
    4.9.9 ACK
4.10 CALIB. SCHED.
    4.10.1 CALIB. INTERVAL.
    4.10.2 TIME LAST CALIB.
    4.10.3 TIME NEXT CALIB.
    4.10.4 REMINDER ACTIV.
    4.10.5 REMIND. 1 (REQ)
    4.10.6 REMIND. 2 (DEM)
    4.10.7 MAINT STAT

4.10.8 ACK STATUS
4.10.9 ACK
4.11 STORED SW VER
5. COMMUNICATION
5.1 DEVICE ADDRESS
5.2 PROFIBUS IDENT
6. SECURITY
6.1 REMOTE ACCESS
6.1.1 REMOTE LOCKOUT
6.2 LOCAL ACCESS
6.2.1 WRITE PROTECTION
7. LANGUAGE

List of abbreviations

F

F.1 List of abbreviations

Short form	Long form	Description	Units
CE / FM / CSA	Conformité Européenne / Factory Mutual / Canadian Standards Association	safety approval	
DCS	Distributed Control System	control room apparatus	
dK	dielectric constant		
EDD	Electronic Device Description		
ESD	Electrostatic Discharge		
FMCW	Frequency Modulated Continuous Wave	radar principle	
HART	Highway Addressable Remote Transducer		
HMI	Human Machine Interface		
I_i	Input current		mA
I_o	Output current		mA
IS	Intrinsically Safe	safety approval	
LCD	Liquid Crystal Display		
µs	microsecond	10^{-6}	s
PA	Process Automation (PROFIBUS)		
PED	Pressure Equipment Directive	safety approval	
ppm	parts per million		
PV	Primary Variable	measured value	
SELV	Safety extra low voltage		
SV	Secondary Value	equivalent value	
TB	Transducer Block		
TVT	Time Varying Threshold	sensitivity threshold	
U_i	Input voltage		V
U_o	Output voltage		V

Glossary

accuracy

degree of conformity of a measure to a standard or a true value.

algorithm

a prescribed set of well-defined rules or processes for the solution of a problem in a finite number of steps.

ambient temperature

the temperature of the surrounding air that comes in contact with the enclosure of the device.

antenna

an aerial which sends out and receives a signal in a specific direction. There are four basic types of antenna in radar level measurement, horn, parabolic, rod, and waveguide.

Auto False-Echo Suppression

a technique used to adjust the level of a TVT to avoid the reading of false echoes. (See TVT.)

Auto-False Echo Suppression Range

defines the endpoint of the learned TVT distance. This is used in conjunction with auto false echo suppression.

beam angle

the angle diametrically subtended by the on-half power limits (-3 dB) of the microwave beam.

beam spreading

the divergence of a beam as it travels through a medium.

blanking

a blind zone extending away from the reference point plus any additional shield length.The device is programmed to ignore this zone.

capacitance

the property of a system of conductors and dielectrics that permits the storage of electricity when potential differences exist between the conductors. Its value is expressed as the ratio of a quantity of electricity to a potential difference, and the unit is a Farad.

confidence

see Echo Confidence.

damping

term applied to the performance of a device to denote the manner in which the measurement settles to its steady indication after a change in the value of the level.

dB (decibel)

a unit used to measure the amplitude of signals.

derating

to decrease a rating suitable for normal conditions according to guidelines specified for different conditions.

dielectric

a nonconductor of direct electric current. Many conductive liquids/electrolytes exhibit dielectric properties; the relative dielectric constant of water is 80.

dielectric constant (dK)

the ability of a dielectric to store electrical potential energy under the influence of an electric field. Also known as Relative Permittivity. An increase in the
dielectric constant is directly proportional to an increase in signal amplitude. The value is usually given relative to a vacuum /dry air: the dielectric constant of air is 1.

echo

a signal that has been reflected with sufficient magnitude and delay to be perceived in some manner as a signal distinct from that directly transmitted. Echoes are frequently measured in decibels relative to the directly transmitted signal.

Echo Confidence

describes the quality of an echo. Higher values represent higher quality. Echo Threshold defines the minimum value required for an echo to be accepted as valid and evaluated.

Echo Lock Window

a window centered on an echo in order to locate and display the echo's position and true reading. Echoes outside the window are not immediately processed.

Echo Marker

a marker that points to the processed echo.

Echo Processing

the process by which the radar unit determines echoes.

Echo Profile

a graphical display of a processed echo.

Echo Strength

describes the strength of the selected echo in dB referred to 1 µV rms.

false echo

any echo which is not the echo from the desired target. Generally, false echoes are created by vessel obstructions.

frequency

the number of periods occurring per unit time. Frequency may be stated in cycles per second.

HART

Highway **A**ddressable **R**emote **T**ransducer. An open communication protocol used to address field instruments.

Hertz (Hz):

unit of frequency, one cycle per second. 1 Gigahertz (GHz) is equal to 10^9 Hz.

inductance

the property of an electric circuit by virtue of which a varying current induces an electromotive force in that circuit or in a neighboring circuit. The unit is a Henry.

local display interface (LDI)

the removable LCD display with push buttons

microwaves

the term for the electromagnetic frequencies occupying the portion of the radio frequency spectrum from 1 GHz to 300 GHz.

Near Blanking

see Blanking.

nozzle

a length of pipe mounted onto a vessel that supports the flange.

parameters

in programming, variables that are given constant values for specific purposes or processes.

polarization

the property of a radiated electromagnetic wave describing the time-varying direction and amplitude of the electric field vector.

polarization error

the error arising from the transmission or reception of an electromagnetic wave having a polarization other than that intended for the system.

pulse radar

a radar type that directly measures distance using short microwave pulses. Distance is determined by the return transit time.

radar

radar is an acronym for **RA**dio **D**etection **A**nd **R**anging. A device that radiates electromagnetic waves and utilizes the reflection of such waves from distant objects to determine their existence or position.

range

distance between a transmitter and a target.

range extension

the distance below the zero percent or empty point in a vessel.

repeatability

the closeness of agreement among repeated measurements of the same variable under the same conditions.

shot

one transmit pulse or measurement.

TVT (Time Varying Threshold)

a time-varying curve that determines the threshold level above which echoes are determined to be valid.

Index

A

Abbreviations and identifications list, 182
Activating, 39
acyclic diagnostics
    fault codes, 170
Approvals
    hazardous area, 137
    radio, 137
Auto False Echo Suppression
    setup, 92
    TVT Shaper adjustment, 62
    via PDM, 61, 63

B

Blanking (see Near Range), 153
bus address (device address)
    resetting to 126, 164
bus termination, 164

C

calibration schedules via PDM, 66
Certificates, 15, 176
Cleaning, 124
CLEF (Constrained Leading Edge Fit)
    explanation, 149
Compact Operating Instructions, 175
Condensed Status
    explanation, 167
configuration
    network, 163
    Quick Start via local display, 48
Customer Support, (Refer to Technical support)
cyclic data
    versus acyclic data, 166

D

Damping
    explanation, 154
data logging
    time-based echo profile storage, 62
Device Address
    setting via LUI, 52
device description
    Electronic Device Description, 163
Device Description (DD)
    see EDD, 53
Device Status
    icons, 128
diagnosis reply, 169
Disassembly, 29
Disposal, 127
Documentation, 175

E

echo processing
    Process Intelligence, 148
Echo Profile
    data logging, 62
    view via loca display, 51
    view via PDM, 61
Echo Profile Utilities
    Auto False Echo Suppression, 61
    Echo Profile, 61
    TVT Shaper, 61
echo selection
    Algorithm, 149
    CLEF (Constrained Leading Edge Fit), 149
    Position algorithm, 149
Echo selection
    time varying threshold (TVT), 148
Echo Setup
    quick access via PDM, 66
EDD
    updating, 54
EDD (electronic device description), 163
Electronic Device Description (EDD)
    required for PROFIBUS PA, 53
    updating, 54

F

Fail-safe
    Behavior explanation, 155
    Mode explanation, 155
    Value explanation, 156

Far Range
explanation, 153
fault codes
acyclic diagnostics, 170
acyclic extended diagnostics, 172
general fault codes, 129

G

GSD file, 163

H

Hazardous area
Laws and directives, 15
Qualified personnel, 17
Hotline, (Refer to Support request)

I

Identifications and abbreviations
list, 182
Instructions and manuals, 175

L

Language, 122
Laws and directives
Disassembly, 15
Personell, 15
LCD display
echo profile viewing, 51
Lithium batteries
Return, 127
Safety, 43
loss of echo (LOE)
explanation, 155

M

maintenance
calibration schedules, 67
service schedules, 67
Maintenance, 123
Manuals, 175
measurement range
blanking via Near Range, 153
extension via Far Range, 153
Measurement Response
explanation, 154
Modifications
correct usage, 14
improper, 14
Mounting
beam angle, 24
nozzle location, 24

N

Near Range
explanation, 153
Nozzle location
Shaper Mode, 24

O

Operating Instructions, 175
operating principles, 147
Overview, 19

P

PDM
see SIMATIC PDM, 53
power consumption, 164
power source
requirements, 31
Process Intelligence, 148
PROFIBUS address 145, 164
programmer
handheld, 43
programming
adjust parameters via PDM, 60
via the handheld programmer, 44

Q

QR code label, 175
Qualified personnel, 17
Quick Start Wizard
via local display, 48
via SIMATIC PDM, 55

R

Reading erratic
troubleshooting, 132
Reading incorrect
troubleshooting, 133
Reading response slow, 132

Response Rate
    explanation, 154
Return procedure, 126

S

Scope of delivery, 12
Service, 175
Service & Support, 175
    Internet, 175
service schedules via PDM, 66
settings
    adjust parameters via PDM, 60
SIMATIC PDM
    functions and features, 53
    overview, 163
SITRANS LR560
    FMCW, 147
    operating principles, 147
startup
    transition screen, 39
status byte
    status codes, 166
status codes, 166
Support, 175
Support request, 175

T

Technical data, 134
    air purge connection, 135
    ambient temperature, 135
    enclosure, 135
    environmental, 135
    lens antenna material, 135
    process connections, 135
    process temperature, 136, 136
    weight, 135
Technical support, 175
    Partner, 175
    Personal contact, 175
Test certificates, 15
troubleshooting
    communication, 133
Troubleshooting
    operation, 132
TVT (time varying threshold)
    explanation, 148
TVT Shaper
    manual adjustment via PDM, 62
    via PDM, 61

W

Warranty, 12
wear
    view via PDM, 67