SIEMENS

SITRANS L

Radar transmitters
SITRANS LR560 with mA/HART

Operating Instructions

Introduction 1

Safety notes 2

Description 3

Installing/mounting 4

Connecting 5

Commissioning 6

Operating 7

Parameter Reference 8

Service and maintenance 9

Diagnosing and troubleshooting 10

Technical data 11

Dimension drawings 12

Technical reference A

HART communications B

Certificates and Support C

HMI menu structure D

List of abbreviations E

08/2019

A5E34647946-AF

Legal information

Warning notice system

This manual contains notices you have to observe in order to ensure your personal safety, as well as to prevent damage to property. The notices referring to your personal safety are highlighted in the manual by a safety alert symbol, notices referring only to property damage have no safety alert symbol. These notices shown below are graded according to the degree of danger.

⚠ DANGER
indicates that death or severe personal injury **will** result if proper precautions are not taken.

⚠ WARNING
indicates that death or severe personal injury **may** result if proper precautions are not taken.

⚠ CAUTION
indicates that minor personal injury can result if proper precautions are not taken.

NOTICE
indicates that property damage can result if proper precautions are not taken.

If more than one degree of danger is present, the warning notice representing the highest degree of danger will be used. A notice warning of injury to persons with a safety alert symbol may also include a warning relating to property damage.

Qualified Personnel

The product/system described in this documentation may be operated only by **personnel qualified** for the specific task in accordance with the relevant documentation, in particular its warning notices and safety instructions. Qualified personnel are those who, based on their training and experience, are capable of identifying risks and avoiding potential hazards when working with these products/systems.

Proper use of Siemens products

Note the following:

⚠ WARNING
Siemens products may only be used for the applications described in the catalog and in the relevant technical documentation. If products and components from other manufacturers are used, these must be recommended or approved by Siemens. Proper transport, storage, installation, assembly, commissioning, operation and maintenance are required to ensure that the products operate safely and without any problems. The permissible ambient conditions must be complied with. The information in the relevant documentation must be observed.

Trademarks

All names identified by ® are registered trademarks of Siemens AG. The remaining trademarks in this publication may be trademarks whose use by third parties for their own purposes could violate the rights of the owner.

Disclaimer of Liability

We have reviewed the contents of this publication to ensure consistency with the hardware and software described. Since variance cannot be precluded entirely, we cannot guarantee full consistency. However, the information in this publication is reviewed regularly and any necessary corrections are included in subsequent editions.

Siemens AG
Division Process Industries and Drives
Postfach 48 48
90026 NÜRNBERG
GERMANY

Document order number: A5E34647946
Ⓟ 10/2019 Subject to change

Copyright © Siemens AG 2019.
All rights reserved

Table of contents

1 Introduction 10

1.1 Purpose of this documentation 10

1.2 Security information 10

1.3 Checking the consignment 11

1.4 Transportation and storage 11

1.5 Notes on warranty 11

1.6 Firmware revision history 12

2 Safety notes 13

2.1 Preconditions for use 13
2.1.1 Safety marking symbols 13
2.1.2 Improper device modifications 13
2.1.3 Laws and directives 14
2.1.4 Conformity with European directives 14
2.1.5 Radio Equipment Directive (RED) compliance (Europe) 14
2.1.6 Federal Communications Commission (FCC) conformity (US) 15
2.1.7 Industry Canada 16

2.2 Use in hazardous areas 16

2.3 Requirements for special applications 17

3 Description 18

3.1 SITRANS LR560 overview 18

4 Installing/mounting 19

4.1 Basic safety instructions 19
4.1.1 Installation location requirements 20
4.1.2 Proper mounting 21
4.1.2.1 Incorrect mounting 21

4.2 Installation instructions 22
4.2.1 Pressure equipment directive (PED, 2014/68/EU) 22
4.2.2 Nozzle location 23
4.2.3 Environment 23
4.2.4 Sunshield 24
4.2.5 Aimer adjustment 25
4.2.6 Air purging system 26
4.2.7 Removable display 27

4.3 Disassembly 27

5 Connecting 28

5.1 Basic safety notes 28
5.1.1 Incorrect connection to power source 29

5.2 Connecting SITRANS LR560 ... 30
5.3 Basic PLC/mA configuration with HART ... 31
5.4 Nameplates for hazardous area installations ... 32
5.4.1 FM/CSA Class 1, Div 2 installation and connection drawing ... 32
5.5 Instructions specific to hazardous area installations ... 33
5.5.1 (Reference European ATEX Directive 2014/34/EU, Annex II, 1.0.6) ... 33
5.5.2 Special conditions for safe use ... 33
6 Commissioning ... 34
6.1 Basic safety notes ... 34
6.2 Activating the radar device ... 36
6.3 The LCD display ... 36
6.4 Commissioning via local display ... 38
6.4.1 Local operation ... 38
6.4.2 Quick Start Wizard via the local display push buttons ... 38
6.5 Commissioning via handheld programmer ... 39
6.5.1 Handheld programmer (Part No. 7ML1930-1BK) ... 39
6.5.2 Lithium batteries ... 40
6.5.3 Key functions in measurement mode ... 41
6.5.4 Programming ... 42
6.5.4.1 Quick Start Wizard via the handheld programmer ... 45
6.5.4.2 Requesting an Echo Profile ... 48
6.6 Application example ... 49
7 Operating ... 50
7.1 Remote operation ... 50
7.1.1 Operating via SIMATIC PDM ... 50
7.1.1.1 PDM function overview ... 50
7.1.1.2 SIMATIC PDM Version ... 50
7.1.1.3 Updating the Electronic Device Description (EDD) ... 50
7.1.1.4 Configuring a new device ... 51
7.1.1.5 Quick Start Wizard via SIMATIC PDM ... 52
7.1.1.6 Changing parameter settings using SIMATIC PDM ... 56
7.1.1.7 Parameters accessed via pull-down menus ... 57
7.1.2 Operating via FDT (field device tool) ... 67
7.1.3 Operating via AMS Device Manager ... 67
7.1.3.1 Functions in AMS Device Manager ... 68
7.1.3.2 Maintenance and diagnostics ... 81
7.1.3.3 Communication ... 83
7.1.3.4 Security ... 83
7.1.3.5 Device Diagnostics ... 84
7.1.3.6 AMS Device Menu Structure ... 87
8 Parameter Reference ... 94
8.1 WIZARDS (1.) ... 94
8.1.1 QUICK START (1.) ... 94
8.1.2 QUICK START WIZARD (1.1.) ... 95
8.1.3 AFES WIZARD (1.2.) ... 95

8.1.4 COPY PARAMETERS TO DISPLAY (1.3.) 97
8.1.5 COPY PARAMETERS FROM DISPLAY (1.4.) 97
8.1.6 COPY FIRMWARE TO DISPLAY (1.5.) 98
8.1.7 COPY FIRMWARE FROM DISPLAY (1.6.) 98

8.2 SETUP (2.) 99
8.2.1 DEVICE (2.1.) 99
8.2.1.1 LONG TAG (2.1.1.) 99
8.2.1.2 TAG (2.1.2.) 99
8.2.1.3 DESCRIPTOR (2.1.3.) 99
8.2.1.4 MESSAGE (2.1.4.) 99
8.2.1.5 INSTALLATION DATE (2.1.5.) 99
8.2.1.6 HARDWARE REVISION (2.1.6.) 99
8.2.1.7 FIRMWARE REVISION (2.1.7.) 99
8.2.1.8 LOADER REVISION (2.1.8.) 99
8.2.1.9 MENU TIMEOUT (2.1.9.) 100
8.2.1.10 MANUFACTURE DATE (2.1.10.) 100
8.2.2 SENSOR (2.2.) 100
8.2.2.1 UNITS (2.2.1.) 100
8.2.2.2 SENSOR MODE (2.2.2.) 100
8.2.2.3 DAMPING FILTER (2.2.3.) 101
8.2.2.4 TEMPERATURE UNITS (2.2.4.) 101
8.2.2.5 UNIT (2.2.5.) 101
8.2.3 CALIBRATION (2.3.) 101
8.2.3.1 LOW CALIBRATION POINT (2.3.1.) 101
8.2.3.2 HIGH CALIBRATION POINT (2.3.2.) 101
8.2.3.3 SENSOR OFFSET (2.3.3.) 102
8.2.4 RATE (2.4.) 102
8.2.4.1 RESPONSE RATE (2.4.1.) 102
8.2.4.2 FILL RATE/MIN (2.4.2.) 103
8.2.4.3 EMPTY RATE/MIN (2.4.3.) 103
8.2.5 FAIL-SAFE (2.5.) 104
8.2.5.1 MATERIAL LEVEL (2.5.1.) 104
8.2.5.2 TIMER (2.5.2.) 104
8.2.5.3 LEVEL (2.5.3.) 104
8.2.6 ANALOG OUTPUT SCALING (2.6.) 105
8.2.6.1 CURRENT OUTPUT FUNCTION (2.6.1.) 105
8.2.6.2 4 mA SETPOINT (2.6.2.) 106
8.2.6.3 20 mA SETPOINT (2.6.3.) 106
8.2.6.4 MIN. mA LIMIT (2.6.4.) 106
8.2.6.5 MAX. mA LIMIT (2.6.5.) 107
8.2.6.6 mA OUTPUT MODE (2.6.6.) 107
8.2.6.7 MANUAL VALUE (2.6.7.) 107
8.2.6.8 mA OUTPUT VALUE (2.6.8.) 108
8.2.7 SIGNAL PROCESSING (2.7.) 108
8.2.7.1 NEAR RANGE (2.7.1.) 108
8.2.7.2 FAR RANGE (2.7.2.) 108
8.2.7.3 ECHO SELECT (2.7.3.) 109
8.2.7.4 SAMPLING (2.7.4.) 110
8.2.7.5 ECHO LOCK (2.7.4.1.) 111
8.2.7.6 UP SAMPLING (2.7.4.2.) 111
8.2.7.7 DOWN SAMPLING (2.7.4.3.) 111
8.2.7.8 ECHO LOCK WINDOW (2.7.4.4.) 111

8.2.7.9 FILTERING (2.7.5.) ... 112
8.2.7.10 ECHO QUALITY (2.7.6.) ... 112
8.2.8 TVT SETUP (2.8.) ... 113
8.2.8.1 AUTO FALSE ECHO SUPPRESSION (2.8.1) ... 113
8.2.8.2 AUTO FALSE ECHO SUPPRESSION RANGE (2.8.2) ... 113
8.2.8.3 HOVER LEVEL (2.8.3) ... 113
8.2.8.4 SHAPER MODE (2.8.4) ... 114
8.2.9 TVT SHAPER (2.9.) ... 114
8.2.10 MEASURED VALUES (2.10.) ... 115
8.2.11 MAIN OUTPUT (2.10.1.) ... 115
8.2.12 OUTPUT NO LINEARIZATION (2.10.2.) ... 115
8.2.13 OUTPUT NO OFFSETS (2.10.3.) ... 115

8.3 DIAGNOSTICS (3.) ... 115
8.3.1 FAULT RESET (3.1.) ... 115
8.3.2 ECHO PROFILE (3.2.) ... 116
8.3.3 TREND (3.3.) ... 116
8.3.4 PEAK VALUES (3.4.) ... 116
8.3.5 MINIMUM MEASURED VALUE (3.4.1.) ... 116
8.3.6 MAXIMUM MEASURED VALUE (3.4.2.) ... 116
8.3.7 MINIMUM PRIMARY VALUE (3.4.3.) ... 117
8.3.8 MAXIMUM PRIMARY VALUE (3.4.4.) ... 117
8.3.9 MINIMUM SECONDARY VALUE (3.4.5.) ... 117
8.3.10 MAXIMUM SECONDARY VALUE (3.4.6.) ... 117
8.3.11 ELECTRONIC TEMPERATURE (3.5.) ... 117
8.3.11.1 MINIMUM VALUE (3.5.1) ... 117
8.3.11.2 MAXIMUM VALUE (3.5.2) ... 117
8.3.11.3 INTERNAL TEMPERATURE (3.5.3) ... 118
8.3.12 REMAINING DEVICE LIFETIME (3.6) ... 118
8.3.12.1 TIME IN OPERATION (3.6.1.) ... 118
8.3.12.2 REMAINING LIFETIME (3.6.2.) ... 118
8.3.12.3 REMIND. 1 (REQUIRED) (3.6.3.) ... 119
8.3.12.4 REMIND. 2 (DEMANDED) (3.6.4.) ... 119
8.3.12.5 REMINDER ACTIVATION (3.6.5.) ... 119
8.3.12.6 LIFETIME EXPECTED (3.6.6.) ... 119
8.3.12.7 MAINTENANCE STATUS (3.6.7.) ... 119
8.3.12.8 ACKNOWLEDGE STATUS (3.6.8.) ... 120
8.3.12.9 ACKNOWLEDGE (3.6.9.) ... 120
8.3.13 REMAINING SENSOR LIFETIME (3.7.) ... 120
8.3.13.1 TIME IN OPERATION (3.7.1.) ... 121
8.3.13.2 REMAINING LIFETIME (3.7.2.) ... 121
8.3.13.3 REMINDER 1 (REQUIRED) (3.7.3.) ... 121
8.3.13.4 REMINDER 2 (DEMANDED) (3.7.4.) ... 121
8.3.13.5 REMINDER ACTIVATION (3.7.5.) ... 121
8.3.13.6 LIFETIME EXPECTED (3.7.6.) ... 122
8.3.13.7 MAINTENANCE STATUS (3.7.7.) ... 122
8.3.13.8 ACKNOWLEDGE STATUS (3.7.8.) ... 122
8.3.13.9 ACKNOWLEDGE (3.7.9.) ... 122

8.4 SERVICE (4.) ... 123
8.4.1 DEMO MODE (4.1.) ... 123
8.4.2 MASTER RESET (4.2.) ... 123
8.4.3 POWERED HOURS (4.3.) ... 123

8.4.4 POWERON RESETS (4.4.) 123
8.4.5 LCD BACKLIGHT (4.5.) 124
8.4.6 LCD CONTRAST (4.6.) 124
8.4.7 SERVICE SCHEDULE (4.7.) 124
8.4.7.1 TIME SINCE LAST SERVICE (4.7.1.) 125
8.4.7.2 TIME UNTIL NEXT SERVICE (4.7.2.) 125
8.4.7.3 REMINDER 1 (REQUIRED) (4.7.3.) 125
8.4.7.4 REMINDER 2 (DEMANDED) (4.7.4.) 125
8.4.7.5 REMINDER ACTIVATION (4.7.5.) 125
8.4.7.6 SERVICE INTERVAL (4.7.6.) 126
8.4.7.7 MAINTENANCE STATUS (4.7.7.) 126
8.4.7.8 ACKNOWLEDGE STATUS (4.7.8.) 126
8.4.7.9 ACKNOWLEDGE (4.7.9.) 127
8.4.8 CALIBRATION SCHEDULE (4.8.) 127
8.4.8.1 TIME SINCE LAST CALIBRATION (4.8.1.) 128
8.4.8.2 TIME UNTIL NEXT CALIBRATION (4.8.2.) 128
8.4.8.3 REMINDER 1 (REQUIRED) (4.8.3.) 128
8.4.8.4 REMINDER 2 (DEMANDED) (4.8.4.) 128
8.4.8.5 REMINDER ACTIVATION (4.8.5.) 129
8.4.8.6 CALIBRATION INTERVAL (4.8.6.) 129
8.4.8.7 MAINTENANCE STATUS (4.8.7.) 129
8.4.8.8 ACKNOWLEDGE STATUS (4.8.8.) 129
8.4.8.9 ACKNOWLEDGE (4.8.9.) 130
8.4.9 STORED SOFTWARE VERSION (4.9.) 130

8.5 COMMUNICATION (5.) 130
8.5.1 DEVICE ADDRESS (5.1.) 130
8.5.2 REMOTE LOCKOUT (5.2.) 131

8.6 SECURITY (6.) 131
8.6.1 WRITE PROTECTION (6.1.) 131

8.7 LANGUAGE (7.) 131

9 Service and maintenance 132

9.1 Basic safety notes 132
9.1.1 Maintenance 132

9.2 Cleaning 133

9.3 Maintenance and repair work 133

9.4 Return procedure 136

9.5 Disposal 137

10 Diagnosing and troubleshooting 138

10.1 Device status icons 138

10.2 Fault codes 139

10.3 Operation troubleshooting 142

10.4 Communication troubleshooting 143

11 Technical data 144

11.1 Power 144

11.2 Performance ... 144
11.3 Construction ... 145
11.4 Operating conditions ... 145
11.5 Process ... 146
11.6 Approvals data ... 147
11.7 Communication: HART ... 147
11.8 Programmer (infrared keypad) ... 148

12 Dimension drawings ... 149

12.1 SITRANS LR560 with stainless steel universal flat-faced flange ... 149
12.2 SITRANS LR560 with 3" aimer flange ... 150
12.3 SITRANS LR560 with 4" and 6" aimer flange ... 151
12.4 SITRANS LR560 with stamped flange ... 152
12.5 Universal slotted flange ... 153
12.6 Stamped flange ... 155
12.7 Process connection label (pressure rated versions) ... 156

A Technical reference ... 157

A.1 Principles of operation ... 157
A.2 Process variables ... 157
A.3 Echo processing ... 157
A.3.1 Process Intelligence ... 157
A.3.2 Echo selection ... 158
A.3.3 CLEF RANGE (2.7.3.4.) ... 160
A.3.4 ECHO THRESHOLD (2.7.3.2.) ... 161
A.3.5 ECHO LOCK (2.7.4.1.) ... 161
A.3.6 SHAPER MODE (2.8.4.) ... 161
A.3.7 Measurement range ... 163
A.3.8 Measurement response ... 163
A.3.9 Damping ... 164
A.4 Analog output ... 164
A.4.1 Sensor Mode ... 164
A.4.2 Current Output Function ... 165
A.4.3 Loss of Echo (LOE) ... 165
A.4.4 Fail-safe Mode ... 166
A.5 Temperature De-Rating ... 166
A.6 Loop Power ... 167
A.6.1 Typical connection drawing ... 167
A.6.2 Startup behavior ... 168
A.6.3 Loop voltage versus loop resistance ... 168

B HART communications ... 169

B.1 SIMATIC PDM ... 169

B.2 HART Electronic Device Description (EDD) 169
B.3 HART Communicator 375 Menu Structure 170
B.4 HART version 176
B.4.1 Burst Mode 176
B.4.2 HART Multidrop Mode 176
C Certificates and Support 177
C.1 Technical support 177
C.2 QR code label 177
C.3 Certificates 178
D HMI menu structure 179
D.1 HMI menu 179
E List of abbreviations 184
E.1 List of abbreviations 184
Glossary 185
Index 190

Introduction 1

Note

This manual applies to the SITRANS LR560 mA/HART version only. HART is a registered trademark of the HART Communication Foundation.

1.1 Purpose of this documentation

These instructions contain all information required to commission and use the device. Read the instructions carefully prior to installation and commissioning. In order to use the device correctly, first review its principle of operation.

The instructions are aimed at persons mechanically installing the device, connecting it electronically, configuring the parameters and commissioning it, as well as service and maintenance engineers.

1.2 Security information

Siemens provides products and solutions with industrial security functions that support the secure operation of plants, systems, machines and networks.

In order to protect plants, systems, machines and networks against cyber threats, it is necessary to implement – and continuously maintain – a holistic, state-of-the-art industrial security concept. Siemens' products and solutions constitute one element of such a concept.

Customers are responsible for preventing unauthorized access to their plants, systems, machines and networks. Such systems, machines and components should only be connected to an enterprise network or the internet if and to the extent such a connection is necessary and only when appropriate security measures (e.g. firewalls and/or network segmentation) are in place.

For additional information on industrial security measures that may be implemented, please visit
https://www.siemens.com/industrialsecurity.

Siemens' products and solutions undergo continuous development to make them more secure. Siemens strongly recommends that product updates are applied as soon as they are available and that the latest product versions are used. Use of product versions that are no longer supported, and failure to apply the latest updates may increase customer's exposure to cyber threats.

To stay informed about product updates, subscribe to the Siemens Industrial Security RSS Feed under
https://www.siemens.com/industrialsecurity.

1.3 Checking the consignment

1. Check the packaging and the delivered items for visible damages.
2. Report any claims for damages immediately to the shipping company.
3. Retain damaged parts for clarification.
4. Check the scope of delivery by comparing your order to the shipping documents for correctness and completeness.

WARNING

Using a damaged or incomplete device

Risk of explosion in hazardous areas.

- Do not use damaged or incomplete devices.

1.4 Transportation and storage

To guarantee sufficient protection during transport and storage, observe the following:

- Keep the original packaging for subsequent transportation.
- Devices/replacement parts should be returned in their original packaging.
- If the original packaging is no longer available, ensure that all shipments are properly packaged to provide sufficient protection during transport. Siemens cannot assume liability for any costs associated with transportation damages.

NOTICE

Insufficient protection during storage

The packaging only provides limited protection against moisture and infiltration.

- Provide additional packaging as necessary.

Special conditions for storage and transportation of the device are listed in Technical data (Page 144).

1.5 Notes on warranty

The contents of this manual shall not become part of or modify any prior or existing agreement, commitment or legal relationship. The sales contract contains all obligations on the part of Siemens as well as the complete and solely applicable warranty conditions. Any statements regarding device versions described in the manual do not create new warranties or modify the existing warranty.

The content reflects the technical status at the time of publishing. Siemens reserves the right to make technical changes in the course of further development.

1.6 Firmware revision history

Firmware version	Hardware version	EDD version	Date (dd/mm/yyyy)	Changes
1.00.00	1.00.00	1.00.00	19 Oct.. 2010	Initial release
1.00.02-06	1.xx.xx	1.00.02-06	18 Nov. 2011	Maintenance release
1.00.02-08	1.xx.xx	1.00.02-08	07 Feb. 2012	Damping Filter Parameter default change to 60s
1.00.03	1.xx.xx	1.00.02-08	28 Oct. 2015	Maintenance release
1.00.03	1.xx.xx	1.00.05-03	19. Aug 2016	Maintenance release
1.00.04-06	2.xx.xx	1.00.05-03	18. Dec 2018	Maintenance release

Note

Damage to the electronic module

On devices with hardware version 2.00.00 or subsequent versions, do not downgrade the firmware to any versions before 1.00.04-06. The electronic module will be damaged. New firmware versions are back compatible with older versions of the hardware; however, devices with new hardware versions are not compatible with older firmware versions.

Safety notes

2

2.1 Preconditions for use

This device left the factory in good working condition. In order to maintain this status and to ensure safe operation of the device, observe these instructions and all the specifications relevant to safety.

Observe the information and symbols on the device. Do not remove any information or symbols from the device. Always keep the information and symbols in a completely legible state.

2.1.1 Safety marking symbols

In manual	On product	Description
⚠	⚠ (Label on product: yellow back-ground.)	WARNING: refer to accompanying documents (manual) for details.

2.1.2 Improper device modifications

⚠ WARNING

Improper device modifications

Risk to personnel, system and environment can result from modifications to the device, particularly in hazardous areas.

- Only carry out modifications that are described in the instructions for the device. Failure to observe this requirement cancels the manufacturer's warranty and the product approvals.

2.1.3 Laws and directives

Observe the safety rules, provisions and laws applicable in your country during connection, assembly and operation. These include, for example:

- National Electrical Code (NEC - NFPA 70) (USA)
- Canadian Electrical Code (CEC) (Canada)

Further provisions for hazardous area applications are for example:

- IEC 60079-14 (international)
- EN 60079-14 (EU)

2.1.4 Conformity with European directives

The CE marking on the device symbolizes the conformity with the following European directives:

Electromagnetic compatibility EMC 2014/30/EU	Directive of the European Parliament and of the Council on the harmonisation of the laws of the Member States relating to electromagnetic compatibility
Low voltage directive LVD 2014/35/EU	Directive of the European Parliament and of the Council on the harmonisation of the laws of the Member States relating to the making available on the market of electrical equipment designed for use within certain voltage limits
Atmosphère explosible ATEX 2014/34/EU	Directive of the European Parliament and the Council on the harmonisation of the laws of the Member States relating to equipment and protective systems intended for use in potentially explosive atmospheres
Pressure equipment directive PED 2014/68/EU	Directive of the European Parliament and of the Council on the harmonisation of the laws of the Member States relating to the making available on the market of pressure equipment
RED 2014/53/EU	Directive of the European Parliament and of the Council on the harmonisation of the laws of the Member States relating to the making available on the market of radio equipment and repealing Directive 1999/5/EC

The applicable directives can be found in the EC conformity declaration of the specific device.

2.1.5 Radio Equipment Directive (RED) compliance (Europe)

Hereby, Siemens declares that the SITRANS LR560 is in compliance with the essential requirements and other relevant provisions of Directive 2014/53/EU.

The LR560 complies with EN 302 372 for use in closed storage vessels, when installed according to the installation requirements of EN 302 372, and may be used in all EU countries.

For the receiver test that covers the influence of an interferer signal to the device, the performance criterion has at least the following level of performance according to ETSI TS 103 361 [6]:

- Performance criterion: measurement value variation Δd over time during a distance measurement
- Level of performance: Δd ≤ ±50 mm

The LR560 complies with ETSI EN 302 729 for use outside of closed tanks in most EU countries. (For a list of exceptions, see the LR560 Declaration to EN 302 729, which can be accessed online here (www.siemens.com/LR560).) For open air installations, the following conditions must be observed:

- Installation and maintenance is performed by suitably qualified and trained personnel.
- The LR560 shall be installed only in a permanent fixed position pointing downwards. Its location shall comply with the following two restrictions:
  - It shall be installed with a minimum separation distance of 4 km from radio astronomy sites listed here (http://www.craf.eu/radio-observatories-in-europe/) unless special authorization has been provided by the responsible national regulatory authority.
  - If it is installed at a location between 4 and 40 km from any radio astronomy site listed here (http://www.craf.eu/radio-observatories-in-europe/), the LR560 shall be installed at a height not exceeding 15m from the ground.

2.1.6 Federal Communications Commission (FCC) conformity (US)

US Installations only: Federal Communications Commission (FCC) rules

- This device has been tested and found to comply with the limits for a Class B digital device, pursuant to Part 15 of the FCC Rules. These limits are designed to provide reasonable protection against harmful interference when the equipment is operated in a commercial environment.
- This device has also been tested and found to comply with the limits §15.256, Subpart C-Intentional radiators, pursuant to Part 15 of the FCC Rules. These limits are designed to provide reasonable protection against harmful interference when the equipment is operated in a commercial environment.
- This device generates, uses, and can radiate radio frequency energy and, if not installed and used in accordance with the instruction manual, may cause harmful interference to radio communications, in which case the user will be required to correct the interference at his/her own expense.
- This device may be used to measure levels in open air environments or outside enclosed tanks, subject to the following conditions:
  - Devices shall be installed and maintained to ensure a vertically downward orientation of the transmit antenna's main beam.
  - Devices shall be installed only at fixed locations. Devices shall not operate while being moved or while inside a moving container.
  - Hand-held applications and residential use are prohibited.

2.1.7 Industry Canada

The SITRANS LR560 complies with Industry Canada standard RSS211 (March 2015).

1. The installation of the SITRANS LR560 shall be done by trained installers, in strict compliance with the manufacturer's instructions.
2. The use of this device is on a “no-interference, no-protection” basis. That is, the user shall accept operations of high-powered radar in the same frequency band which may interfere with or damage this device. However, devices found to interfere with primary licensing operations will be required to be removed at the user’s expense.
3. The installer/user of this device shall ensure that it is at least 10 km from the Penticton radio astronomy station (British Columbia latitude: 49° 19' 12" N, longitude: 119° 37'12" W). For devices not meeting this 10 km separation (e.g. the Okanagan Valley, British Columbia) the installer/ user must coordinate with and obtain the written concurrence of the Director of the Penticton radio astronomy station before the equipment can be installed or operated. The Director of the DRAO may be contacted at 250-497-2300 or at NRC.DRAO-OFR.CNRC@nrc-cnrc.gc.ca. (Alternatively, the Manager, Regulatory Standards, Industry Canada, may be contacted.)

2.2 Use in hazardous areas

Qualified personnel for hazardous area applications

Persons who install, connect, commission, operate, and service the device in a hazardous area must have the following specific qualifications:

- They are authorized, trained or instructed in operating and maintaining devices and systems according to the safety regulations for electrical circuits, high pressures, aggressive, and hazardous media.
- They are authorized, trained, or instructed in carrying out work on electrical circuits for hazardous systems.
- They are trained or instructed in maintenance and use of appropriate safety equipment according to the pertinent safety regulations.

⚠ WARNING

Use in hazardous area

Risk of explosion.

- Only use equipment that is approved for use in the intended hazardous area and labeled accordingly.
- Do not use devices that have been operated outside the conditions specified for hazardous areas. If you have used the device outside the conditions for hazardous areas, make all Ex markings unrecognizable on the nameplate.

2.3 Requirements for special applications

Due to the large number of possible applications, each detail of the described device versions for each possible scenario during commissioning, operation, maintenance or operation in systems cannot be considered in the instructions. If you need additional information not covered by these instructions, contact your local Siemens office or company representative.

Note

Operation under special ambient conditions

We highly recommend that you contact your Siemens representative or our application department before you operate the device under special ambient conditions as can be encountered in nuclear power plants or when the device is used for research and development purposes.

Description

3

3.1 SITRANS LR560 overview

SITRANS LR560 is a 2-wire, 78 GHz FMCW radar level transmitter for continuous monitoring of solids and liquids in vessels to a range of 100 m (329 ft). The plug-and-play performance is ideal for all solids applications, including those with extreme dust and high temperatures to +200 °C (+392 °F). The device is an electronic circuit coupled to a lens antenna and flange for quick and easy positioning.

The main benefits of using 78 GHz over devices using lower frequency are:

- very narrow beam, so device is insensitive to mounting nozzle interference and vessel obstructions.
- short wavelength yields very good reflection properties on sloped solids, so aiming towards material angle of repose is usually not necessary.

The technology is very tolerant to buildup on the lens antenna, however an air purge inlet is provided for periodic cleaning if required.

Installing/mounting

4

4.1 Basic safety instructions

CAUTION

Hot surfaces resulting from hot process media

Risk of burns resulting from surface temperatures above 65 °C (149 °F).

- Take appropriate protective measures, for example contact protection.
- Make sure that protective measures do not cause the maximum permissible ambient temperature to be exceeded. Refer to the information in Technical data (Page 144).

Note

Material compatibility

Siemens can provide you with support concerning selection of sensor components wetted by process media. However, you are responsible for the selection of components. Siemens accepts no liability for faults or failures resulting from incompatible materials.

WARNING

Wetted parts unsuitable for the process media

Risk of injury or damage to device.

Hot, toxic and corrosive media could be released if the wetted parts are unsuitable for the process medium.

- Ensure that the material of the device parts wetted by the process medium is suitable for the medium. Refer to the information in Technical data (Page 144).

WARNING

Unsuitable connecting parts

Risk of injury or poisoning.

In case of improper mounting, hot, toxic, and corrosive process media could be released at the connections.

- Ensure that connecting parts (such as flange gaskets and bolts) are suitable for connection and process media.

WARNING

Pressure applications

Danger to personnel, system and environment can result from improper installation.

- Improper installation may result in loss of process pressure.

WARNING

Exceeded maximum permissible operating pressure

Risk of injury or poisoning.

The maximum permissible operating pressure depends on the device version, pressure limit and temperature rating. The device can be damaged if the operating pressure is exceeded. Hot, toxic and corrosive process media could be released.

Ensure that maximum permissible operating pressure of the device is not exceeded. Refer to the information on the nameplate and/or in Technical data (Page 144).

CAUTION

External stresses and loads

Damage to device by severe external stresses and loads (e.g. thermal expansion or pipe tension). Process media can be released.

- Prevent severe external stresses and loads from acting on the device.

4.1.1 Installation location requirements

NOTICE

Strong vibrations

Damage to device.

- In installations with strong vibrations, mount the transmitter in a low vibration environment.

NOTICE

Aggressive atmospheres

Damage to device through penetration of aggressive vapors.

- Ensure that the device is suitable for the application.

NOTICE

Direct sunlight

Device damage.

The device can overheat or materials become brittle due to UV exposure.

- Protect the device from direct sunlight.
- Make sure that the maximum permissible ambient temperature is not exceeded. Refer to the information in Technical data (Page 144).

WARNING

Insufficient air supply

The device may overheat if there is an insufficient supply of air.

- Install the device so that there is sufficient air supply in the room.
- Observe the maximum permissible ambient temperature. Refer to the information in the section Technical data (Page 144).

4.1.2 Proper mounting

4.1.2.1 Incorrect mounting

NOTICE

Incorrect mounting

The device can be damaged, destroyed, or its functionality impaired through improper mounting.

- Before installing ensure there is no visible damage to the device.
- Make sure that process connectors are clean, and suitable gaskets and glands are used.
- Mount the device using suitable tools.

WARNING

Loss of type of protection

Risk of explosion. Damage to device if the enclosure is open or not properly closed. The type of protection specified on the nameplate or in Technical data (Page 144) is no longer guaranteed.

- Make sure that the device is securely closed.

4.2 Installation instructions

NOTICE
Damage to the flange If mating flange faces are not flat and free of distortion, then bolting the flanged process connection may produce a bending load on the device's flange. Cracking or other damage may occur. Use only 'full-face' flat gaskets surrounding the bolt holes. Ensure mating flange faces are flat and free of distortion.

4.2.1 Pressure equipment directive (PED, 2014/68/EU)

Note

Pressure-rated version only

- SITRANS LR560 units are pressure tested, meeting or exceeding the requirements of the ASME Boiler and Pressure Vessel Code and the European Pressure Equipment Directive.
- The serial numbers stamped in each process connection body provide a unique identification number indicating date of manufacture.
  Example: MMDDYY – XXX (where MM = month, DD = day, YY = year, and XXX= sequential unit produced)
- Further markings (space permitting) indicate flange configuration, size, pressure class, material, and material heat code.

SITRANS LR560 radar level measurement instrument falls below the limits of Article 4, sections 1&2 of the Pressure Equipment directive (2014/68/EU), as a category I pressure accessory. However, in accordance with PED, 2014/68/EU, Article 4, section 3, this equipment has been designed and manufactured in accordance with Sound Engineering Practice (SEP) (see EU Commission Guideline A-05).

4.2.2 Nozzle location

Note

False echoes

For details on avoiding false echoes, see SHAPER MODE (2.8.4) (Page 114).

- Avoid central locations on tall, narrow vessels

Beam angle

- Beam angle is the width of the cone where the energy density is half of the peak energy density.
- The peak energy density is directly in front of and in line with the antenna.
- There is a signal transmitted outside the beam angle, therefore false targets may be detected.

Emission cone

- Keep emission cone free of interference from ladders, pipes, I-beams, or filling streams.

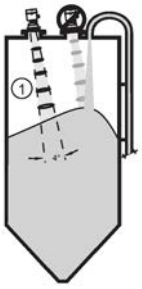

① Emission cone

4.2.3 Environment

- Provide easy access for viewing the display and programming via the local push buttons or the handheld programmer.
- Provide an environment suitable to the housing rating and materials of construction.

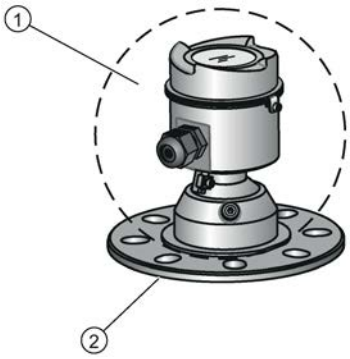

① ambient temperature: –40 °C to +80 °C (–40 °F to +176 °F)

② process temperature: –40 to +100 °C (–40 to +212 °F) or –40 to +200 °C (–40 to +392 °F) depending on the version

4.2.4 Sunshield

The LR560 display can be protected by an optional sun shield if the instrument will be mounted in direct sunlight.

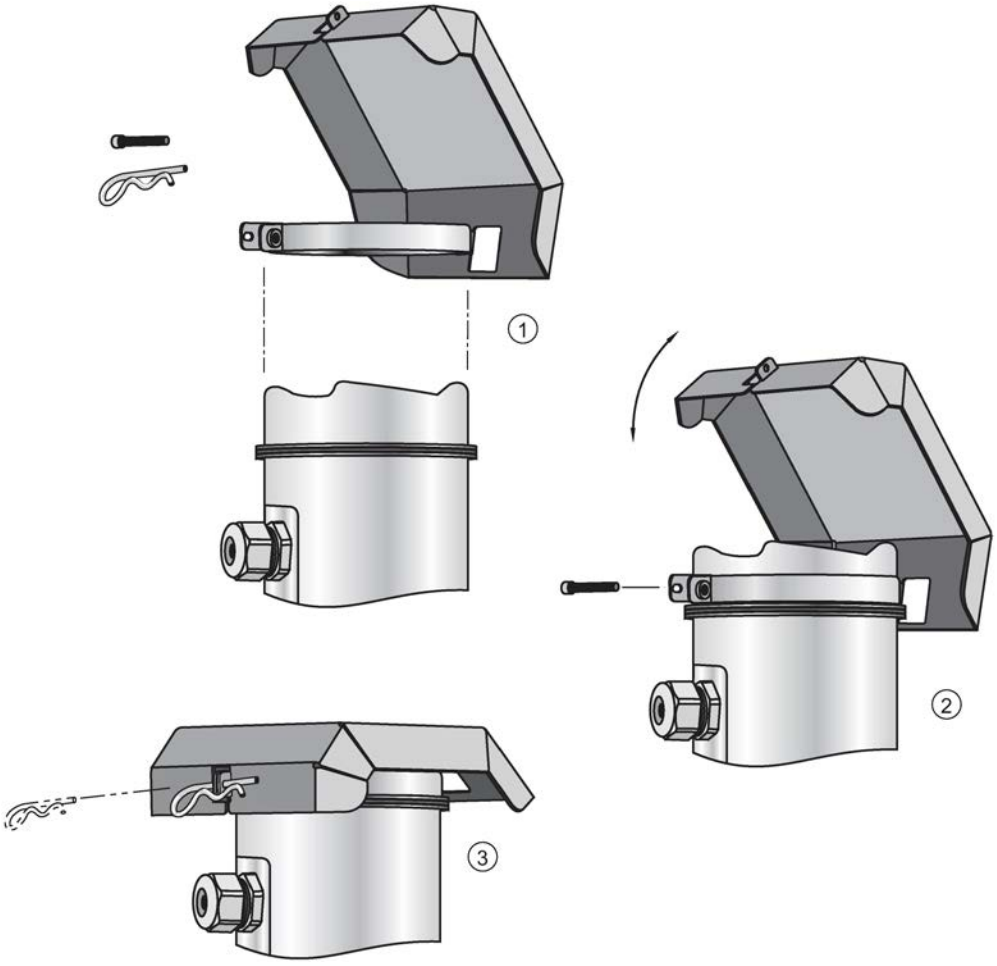

4.2.5 Aimer adjustment

Note

Measuring material in the cone

Aiming will assist in measuring material in the cone.

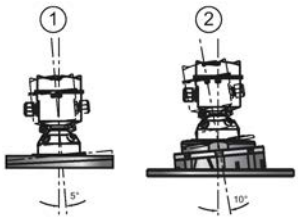

① 3" flange ② 4" and 6" flange

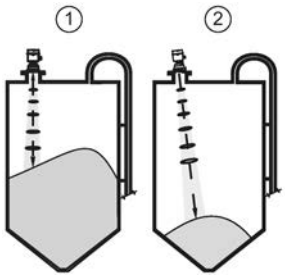

① Aiming is not required for signal optimization with 78 GHz frequency.

② Aiming will assist in measuring material in the cone.

1. For 4 and 6" Aimer: loosen the set screws in the locking ring.
   - Holding the electronics enclosure firmly, loosen the Aimer locking ring using the supplied C spanner, until the LR560 drops down slightly. The enclosure can then be turned freely.
2. Direct SITRANS LR560 so the antenna is pointed at an angle perpendicular to the material surface, if possible.
3. When the desired position is reached, re-tighten the locking ring using the C spanner, and tighten set screws.

4.2.6 Air purging system

For convenient cleaning, a purging inlet is provided above the antenna. The system provides a 1/8" inlet (female thread) above the antenna where clean, dry air passes to the face of the antenna lens to clean it. The customer will supply the purging air by a manual or automatic valve system.

Note

Air Purging considerations

- Purge duration, pressure, and interval, will vary with each application. It is the user's responsibility to determine the requirements depending on the application and cleaning required.
- Short duration bursts of high pressure provide more effective cleaning than continuous low pressure air.
- Some dust particles are highly abrasive and can cause wear on the lens face over time if continuous air purge is used, therefore short bursts are recommended.
- It is the customer's responsibility to ensure that any vacuum or pressure in the measured vessel is maintained, considering the hole that passes through the process connection and SITRANS LR560 antenna system.

Air Consumption (flow rate versus applied pressure)

Air pressure (psi)	Approx. inlet volume flow rate (SCFM)
20	5
40	10
50	15
80	20
100	25
110	30
Recommended 90 to 110 psi for effective cleaning[1)]	

[1)] Air pressure in vessel can affect purge operation.

Purge connection

- The purge connection is closed by the manufacturer, using a 1/8" plug.
- When the plug is removed to connect a purging system, the operator is responsible for ensuring that the purging circuit conforms to "Ex" requirements: for example, by fitting an NRV valve. Air pressure in vessel can affect purge operation.

① purge process connection with factory-installed 1/8" NPT plug

4.2.7 Removable display

The optional display can be rotated as required, to one of 4 positions, 90 degrees apart, see Connecting SITRANS LR560 (Page 30). It can also be used to transfer parameters from one device to another, see COPY PARAMETERS TO DISPLAY (1.3.) (Page 97).

4.3 Disassembly

WARNING

Incorrect disassembly

The following risks may result from incorrect disassembly:

- Injury through electric shock

- Risk through emerging media when connected to the process

- Risk of explosion in hazardous area

In order to disassemble correctly, observe the following:

- Before starting work, make sure that you have switched off all physical variables such as pressure, temperature, electricity etc. or that they have a harmless value.
- If the device contains hazardous media, it must be emptied prior to disassembly. Make sure that no environmentally hazardous media are released.
- Secure the remaining connections so that no damage can result if the process is started unintentionally.

DANGER

Pressure applications

Danger to personnel, system and environment will result from improper disassembly.

- Never attempt to loosen, remove, or disassemble process connection while vessel contents are under pressure.

Connecting

5

5.1 Basic safety notes

WARNING

Unsuitable cables, cable glands and/or plugs

Risk of explosion in hazardous areas.

- Use only cable glands/plugs that comply with the requirements for the relevant type of protection.
- Tighten the cable glands in accordance with the torques specified in Technical data (Page 144).
- Close unused cable inlets for the electrical connections.
- When replacing cable glands, only use cable glands of the same type.
- After installation, check that the cables are seated firmly.

WARNING

Hazardous contact voltage

Risk of electric shock in case of incorrect connection.

- For the electrical connection specifications, refer to the information in Technical data (Page 144).
- At the mounting location of the device observe the applicable directives and laws for installation of electrical power installations with rated voltages below 1000 V.

NOTICE

Condensation in the device

Damage to device through formation of condensation if the temperature difference between transportation or storage and the mounting location exceeds 20 °C (36 °F).

- Before taking the device into operation, let the device adapt for several hours in the new environment.

WARNING

Missing PE/ground connection

Risk of electric shock.

Depending on the device version, connect the power supply as follows:

- **Power plug**: Ensure that the used socket has a PE/ground conductor connection. Check that the PE/ground conductor connection of the socket and power plug match each other.
- **Connecting terminals**: Connect the terminals according to the terminal connection diagram. First connect the PE/ground conductor.

5.1.1 Incorrect connection to power source

WARNING

Incorrect connection to power source

Risk to personnel, system and environment can result from improper power connection.

- The DC input terminals shall be supplied from a source providing electrical isolation between the input and output, in order to meet the applicable safety requirements of IEC 61010-1. For example, Class 2 or Limited Energy Source.
- All field wiring must have insulation suitable for rated voltages.

WARNING

Unprotected cable ends

Risk of explosion through unprotected cable ends in hazardous areas.

- Protect unused cable ends in accordance with IEC/EN 60079-14.

WARNING

Improper laying of shielded cables

Risk of explosion through compensating currents between hazardous area and the non-hazardous area.

- Shielded cables that cross into hazardous areas should be grounded only at one end.
- If grounding is required at both ends, use an equipotential bonding conductor.

WARNING

Incorrect selection of type of protection

Risk of explosion in areas subject to explosion hazard.

This device is approved for several types of protection.

1. Decide in favor of one type of protection.
2. Connect the device in accordance with the selected type of protection.
3. In order to avoid incorrect use at a later point, make the types of protection that are not used permanently unrecognizable on the nameplate.

Note

Electromagnetic compatibility (EMC)

You can use this device in industrial environments, households and small businesses.

For metal housings there is an increased electromagnetic compatibility compared to high-frequency radiation. This protection can be increased by grounding the housing, see Connecting (Page 28).

5.2 Connecting SITRANS LR560

Note

- Check the device label on your instrument, to verify the approval rating.
- Use appropriate conduit seals to maintain IP or NEMA rating.
- Use twisted pair cable: AWG 22 to 14 (0.34 mm² to 2.5 mm²).
- Separate cables and conduits may be required to conform to standard instrumentation wiring practices or electrical codes.

1. Loosen locking screw.
2. Remove LR560 lid.
3. Remove optional display by gently turning the display a quarter turn counter-clockwise until it is free.
4. Strip the cable jacket for approximately 70 mm (2.75") from the end of the cable, and thread the wires through the gland[1)].
5. Connect the wires to the terminals as shown: the polarity is identified on the terminal block.
6. Ground the instrument according to local regulations.
7. Tighten the gland to form a good seal.

8. Replace optional display and device lid.
9. Tighten locking screw.

[1] If cable is routed through conduit, use only approved suitable-size hubs for waterproof applications.

Removing the lid and display

Terminal block

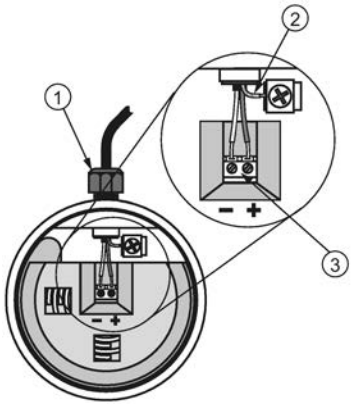

① cable gland (or NPT cable entry
② cable shield
③ instrument connection

5.3 Basic PLC/mA configuration with HART

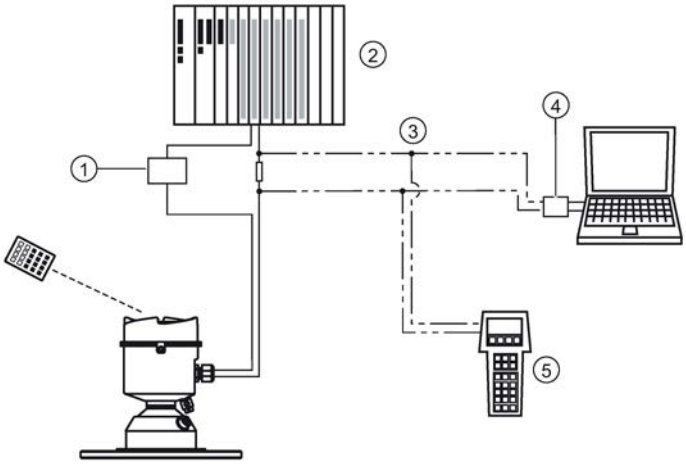

①	power supply[1]	④	HART modem
②	active PLC	⑤	HART communicator
③	R= 250 Ω[2]		

[1] Depending on the system design, the power supply may be separate from the PLC, or integral to it.
[2] HART resistance (total loop resistance, that is, cable resistance plus 250 Ohm [resistor]) must be less than 550 Ohm for the device to function properly.

5.4 Nameplates for hazardous area installations

Note

Sample nameplate

The serial number and assembly location shown on the nameplate are given as examples only.

HART

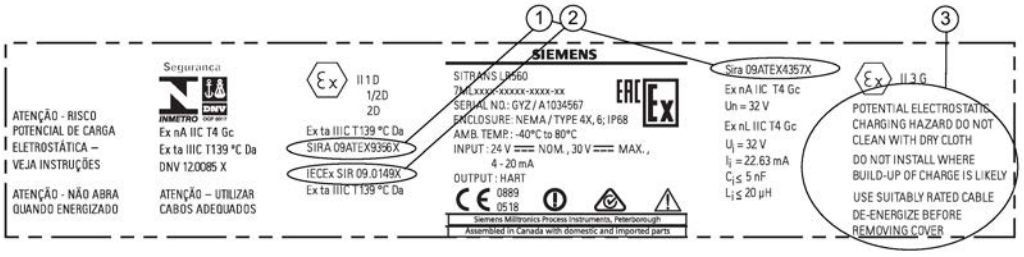

① ATEX certificate number	The ATEX certificates can be found on the product website. Go to LR560 (www.siemens.com/LR560) > **Support** > **Approvals/Certificates.** For more information on hazardous area approvals, see Approvals data (Page 147).
② IECEx certificate number	The IECEx certificate can be found on the IECEx website. Go to IECEX (http://iecex.iec.ch) > **Certified Equipment** and enter the IECEx SIR number.
③ Safety notes	Potential electrostatic charging hazard. Do not clean with dry cloth. Do not install where build-up of charge is likely. Use suitably rated cable. De-energize before removing cover.

5.4.1 FM/CSA Class 1, Div 2 installation and connection drawing

The FM/CSA Class 1, Div 2 connection drawing (A5E02795836) listed on the device nameplate can be downloaded from the Siemens Industry Image Database:

FM/CSA Class 1, Div 2 connection drawing A5E02795836 (http://www.automation.siemens.com/bilddb/index.aspx?gridview=view2&objkey=G_FI01_XX_05528&showdetail=true&view=Search)

5.5 Instructions specific to hazardous area installations

5.5.1 (Reference European ATEX Directive 2014/34/EU, Annex II, 1.0.6)

The following instructions apply to equipment covered by certificate number SIRA 09ATEX9356X and Sira 09ATEX4357X.

1. For use and assembly and details of marking/coding, refer to the main instructions.
2. The equipment is certified for use as Category 1D, 1/2D and 2D equipment per certificate Sira 09ATEX9356X and may be used in hazardous zones 20, 21 and 22. The equipment is also certified for use as Category 3G equipment per certificate Sira 09ATEX4357X and may be used in hazardous zone 2.
3. This equipment has a maximum surface temperature of 139 °C (in an 80 °C ambient). Refer to the applicable code of practice for selection of this equipment with respect to specific dust ignition temperatures.
4. The equipment is certified for use in an ambient temperature range of -40 °C to 80 °C.
5. The equipment has not been assessed as a safety related device (as referred to by Directive 2014/34/EU Annex II, clause 1.5).
6. Installation and inspection of this equipment shall be carried out by suitably trained and authorized personnel in accordance with the applicable code of practice.
7. The equipment shall be installed such that the supply cable is protected from mechanical damage. The cable shall not be subjected to tension or torque. The equipment manufacturer is not responsible for providing the supply cable.
8. Repair of this equipment shall be carried out by suitably trained and authorized personnel in accordance with the applicable code of practice.

5.5.2 Special conditions for safe use

SPECIAL CONDITIONS FOR SAFE USE

The 'X' suffix to the certificate number relates to the following special condition(s) for safe use:

- Parts of the enclosure may be non-conducting and may generate an ignitioncapable level of electrostatic charge under certain extreme conditions. The user should ensure that the equipment is not installed in a location where it may be subjected to external conditions (such as high-pressure steam), which might cause a build-up of electrostatic charge on non-conducting surfaces.
- The end user must ensure that an ingress protection of at least IP65 is maintained at each entry to the enclosure by use of a blanking element or cable entry device that meets the requirements of the protection concepts type ‘n’ or increased safety ‘e’ or flameproof ‘d’.
- The supply to the equipment shall be rated for a prospective short-circuit current of not more than 10 kA and shall be protected by a suitably-rated fuse.

Commissioning 6

6.1 Basic safety notes

WARNING

Improper commissioning in hazardous areas

Device failure or risk of explosion in hazardous areas.

- Do not commission the device until it has been mounted completely and connected in accordance with the information in Installing/mounting (Page 19).
- Before commissioning take the effect on other devices in the system into account.

WARNING

Commissioning and operation with pending error

If an error message appears, correct operation in the process is no longer guaranteed.

- Check the gravity of the error.
- Correct the error.
- If the error still exists:
  - Take the device out of operation.
  - Prevent renewed commissioning.

WARNING

Hot surfaces

Risk of burns resulting from hot surfaces.

- Take corresponding protective measures, for example by wearing protective gloves.

WARNING

Loss of type of protection

Risk of explosion. Damage to device if the enclosure is open or not properly closed. The type of protection specified on the nameplate or in Technical data (Page 144) is no longer guaranteed.

- Make sure that the device is securely closed.

WARNING

Hazardous contact voltage

Risk of injury through hazardous contact voltage when the device is open or not completely closed.

The degree of protection specified on the nameplate or in Approvals data (Page 147) is no longer guaranteed if the device is open or not properly closed.

- Make sure that the device is securely closed.

DANGER

Toxic gases and liquids

Danger of poisoning when venting the device: if toxic process media are measured, toxic gases and liquids can be released.

- Before venting ensure that there are no toxic gases or liquids in the device, or take the appropriate safety measures.

WARNING

Loss of explosion protection

Risk of explosion in hazardous areas if the device is open or not properly closed.

- Close the device as described in Installing/mounting (Page 19).

WARNING

Hazardous gases in the enclosure

Risk of explosion.

Hazardous gases are gases that can explode and have a gas concentration of more than 25% of the lower explosion limit (LEL). Under normal ambient conditions the LEL is the risk threshold when handling these gases. However, special operating conditions can lower the potential risk from these gases under the LEL. A value of 25% of the LEL is regarded as definitely safe.

- Do not introduce combustible or hazardous gases into a restricted-breathing enclosure (type of protection Ex nR).

6.2 Activating the radar device

Power up the instrument. A transition screen showing first the Siemens logo and then the current firmware revision is displayed while the first measurement is being processed. The first time the device is configured, you will be prompted to select a language (English, German, French, Spanish or Chinese).

Press **Mode** to toggle between Measurement and Program mode.

Note

Toggling between *Program* and *Measurement* modes

- To enter Program mode using the device buttons, press RIGHT ▶. Press LEFT ◀ to return to Measurement mode.
- To toggle between Measurement and Program Mode using the handheld programmer, press Mode.

6.3 The LCD display

Measurement mode display[1)2)]: Normal operation

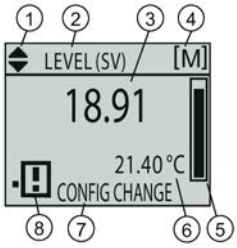

①	toggle indicator[1)] for PV or SV (primary or secondary values)	⑦	text area displays status messages	
②	selected operation: level, space, or distance	or		
③	measured value (level, space, or distance)	⑦	text area displays a fault code and an error message	
④	units	⑧	device status indicator	
⑤	bar graph indicates level	or		
⑥	secondary region indicates on request[2)] electronics temperature, echo confidence, loop current, or distance	⑧	service required icon appears	**Fault present:** S: 0 LOE

PROGRAM mode display

Navigation view

- A visible menu bar indicates the menu list is too long to display all items.
- The depth of the item band on the menu bar indicates the length of the menu list: a deeper band indicates fewer items.
- The position of the item band indicates the approximate position of the current item in the list. A band halfway down the menu bar indicates the current item is halfway down the list.

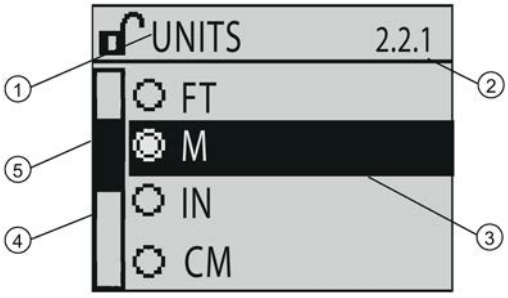

① current menu
② current item number
③ current item
④ menu bar
⑤ item band

Parameter view

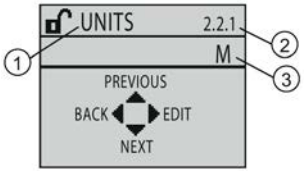

Edit view

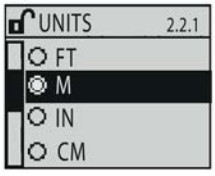

① parameter name

② parameter number

③ parameter value/selection

[1] Press UP or DOWN arrow to switch
[2] In response to a key press request. For details, see Key functions in measurement mode (Page 41).

6.4 Commissioning via local display

6.4.1 Local operation

SITRANS LR560 carries out its level measurement tasks according to settings made via parameters. The settings can be modified locally via the optional local graphical display which consists of an LCD display with buttons. You can use either the push buttons or an infrared handheld programmer to make changes.

① push buttons

A Quick Start Wizard provides an easy step-by-step procedure to help you configure the device for a simple application. There are two ways to access the wizard:

- locally, see Quick Start Wizard via the local display push buttons (Page 38) or Quick Start Wizard via the handheld programmer (Page 45)
- from a remote location, see Quick Start Wizard via SIMATIC PDM (Page 52) or Operating via AMS Device Manager (Page 67). For the complete list of parameters, see Parameter Reference (Page 94).

6.4.2 Quick Start Wizard via the local display push buttons

1. Press RIGHT ▶ to enter Program Mode.
2. Choose Quick Start (1.), and then Quick Start Wizard (1.1.).
3. Follow the steps then choose Finish to save Quick Start parameter changes and return to Program menu, or press LEFT ◀ to return to Measurement mode.

To add or delete digits using the push buttons:

When the enter icon ↵ is lit, press UP ▲ to insert a digit on the right, DOWN ▼ to delete the right-most digit, RIGHT ▶ to accept the value, or LEFT ◀ to cancel.

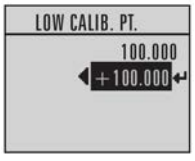

1. Navigate to the parameter you wish to modify and press RIGHT ▶ to edit it. The value will be highlighted.
2. Press UP ▲ or DOWN ▼ to delete the highlighted value, or LEFT ◀ to modify the value from the left-most digit, starting with the plus/minus sign.
3. With the plus or minus sign highlighted, press up or down arrow to change it. Press right arrow to highlight the next digit to the right.

4. Use UP ▲ or DOWN ▼ to modify the highlighted digit. Scroll past 9 to reach the decimal point.
5. When the value is complete, press RIGHT ▶ until the Enter icon is highlighted, then press RIGHT ▶ to accept the value.

To modify a text string:

1. Navigate to the parameter you wish to modify and press RIGHT ▶ to edit it. The string will be highlighted.
2. Follow the same steps as above, to add, delete, or modify characters.

6.5 Commissioning via handheld programmer

6.5.1 Handheld programmer (Part No. 7ML1930-1BK)

The programmer is ordered separately.

The handheld programmer used with this device contains lithium batteries that are non-replaceable.

6.5.2 Lithium batteries

Lithium batteries are primary power sources with high energy content designed to provide the highest possible degree of safety.

WARNING

Potential hazard

Lithium batteries may present a potential hazard if they are abused electrically or mechanically. Observe the following precautions when handling and using lithium batteries:

- Do not short-circuit, recharge or connect with false polarity.
- Do not expose to temperatures beyond the specified temperature range.
- Do not incinerate.
- Do not crush, puncture or open cells or disassemble.
- Do not weld or solder to the battery's body.
- Do not expose contents to water.

6.5.3 Key functions in measurement mode

Key functions in measurement mode

Key	Function	Result
5	Updates the loop current	New value is shown in secondary region of local display.
6	Updates internal enclosure temperature reading	
8	Updates echo confidence value	New value is shown in secondary region of local display.
	Updates distance measurement	
	Mode opens PROGRAM mode	Opens the menu level last displayed in this power cycle, unless power has been cycled since exiting PROGRAM mode or more than 10 minutes have elapsed since PROGRAM mode was used. Then top level menu will be displayed.
	Home toggles local display	Local display toggles between % or linear units
	RIGHT arrow opens PROGRAM mode	Opens the top level menu.
	UP or **DOWN arrow** toggles between linear units and percent	Local display shows measured value in either linear units or percent.

6.5.4 Programming

Note

- While the device is in PROGRAM mode the output remains fixed and does not respond to changes in the device.
- The device automatically returns to Measurement mode after a period of inactivity in PROGRAM mode (between 15 seconds and 2 minutes, depending on the menu level).

Change parameter settings and set operating conditions to suit your specific application. For remote operation, see Operating via SIMATIC PDM (Page 50) or Operating via FDT (field device tool) (Page 67).

Parameter menus

Note

Parameters

For the complete list of parameters with instructions, see Parameter Reference (Page 94).

Parameters are identified by name and organized into function groups, then arranged in a 5-level menu structure, see HMI menu (Page 179).

2. SETUP
  2.7. SIGNAL PROCESSING
    2.7.3. ECHO SELECT
      2.7.3.1. ALGORITHM

1. Enter **PROGRAM** mode	Using local display buttons: • Press RIGHT ▶
	Using handheld programmer: 1. Point the programmer at the display from a maximum distance of 300 mm (1 ft). 2. RIGHT activates PROGRAM mode and opens menu level 1. 3. Mode opens the menu level last displayed in PROGRAM within the last 10 minutes, or menu level 1 if power has been cycled since then.
2. Editing in **PROGRAM** mode	To select a listed option: 1. Navigate to the desired parameter. 2. Press RIGHT to open parameter view. 3. Press RIGHT again to open Edit mode. The current selection is highlighted. Scroll to a new selection. 4. Press RIGHT to accept it. 5. The local display returns to parameter view and displays the new selection.
	To change a numeric value: 1. Navigate to the desired parameter. 2. Press RIGHT to open parameter view. 3. The current value is displayed. 4. Press RIGHT again to open Edit mode. The current value is highlighted. Key in a new value. Press RIGHT to accept it. 5. The local display returns to parameter view and displays the new selection.

Note

Navigation

- In Navigation mode, ARROW keys move to the next menu item in the direction of the arrow.
- For Quick Access to parameters via the handheld programmer, press Home , and then enter the menu number, for example: 3.2. Echo Profile.

Key functions in Navigation mode

Key	Name	Menu level	Function
	UP or DOWN arrow	menu or parameter	Scroll to previous or next menu or parameter.
	RIGHT arrow	menu	Go to first parameter in the selected menu, or open next menu.
		parameter	Open Edit mode.
	LEFT arrow	menu or parameter	Open parent menu.
	Mode	menu or parameter	Change to **MEASUREMENT** mode.
	Home	menu or parameter	Open top level menu: menu 1.

Key functions in Program mode

Key	Name		Function
	UP or DOWN arrow	Selecting options	Scrolls to item.
		Alphanumeric editing	• Increments or decrements digits • Toggles plus and minus sign
	RIGHT arrow	Selecting options	• Accepts the data (writes the parameter) • Changes from Edit to Navigation mode
		Numeric editing	• Moves cursor one space to the right • Or with cursor on Enter sign, accepts the data and changes from Edit to Navigation mode
	LEFT arrow	Selecting options	Cancels Edit mode without changing the parameter
		Numeric editing	• Moves cursor to plus/minus sign if this is the first key pressed • Or moves cursor one space to the left. • Or with cursor on Enter sign, cancels the entry
C	Clear	Numeric editing	Erases the display
•	Decimal point	Numeric editing	1. In Edit mode, enter a decimal point. 2. In Parameter View, press • to store menu path to that parameter, and create custom Secondary Value to be displayed in secondary region of LCD.
−/+	Plus or minus sign	Numeric editing	Changes the sign of the entered value.
0 to 9	Numeral	Numeric editing	Enters the corresponding character. Editing in **PROGRAM** mode

6.5.4.1 Quick Start Wizard via the handheld programmer

Note

- A reset to factory defaults should be performed before running the Quick Start Wizard if the device has been used in a previous application. See Quick Start Wizard via the local display push buttons (Page 38).
- The Quick Start wizard settings are inter-related and changes apply only after you select **Finish** in the Wizard Complete step.
- Do not use the Quick Start wizard to modify parameters: see instead Parameter Reference (Page 94). Perform customization for your application only after the Quick Start has been completed.

Quick Start Wizard

1. Point the programmer at the display from a maximum distance of 300 mm (1 ft.), then press RIGHT ▶ to activate PROGRAM mode and open menu level 1.
2. Press RIGHT ▶ twice to navigate to menu item 1.1 and open parameter view.
3. Press RIGHT ▶ to open Edit mode or DOWN ▼ to accept default values and move directly to the next item.
4. To change a setting, scroll to the desired item or key in a new value.
5. After modifying a value, press RIGHT ▶ to accept it and press DOWN ▼ to move to the next item.
6. At any time, you can press UP ▲ to go back, or LEFT ◀ to cancel and return to Measurement mode.

Vessel

Factory setting:	STEEL
Setting range:	STEEL or CONCRETE
Purpose:	Select vessel construction material.
Description:	• Selecting either STEEL or CONCRETE does a functional reset; see MASTER RESET (4.2.) (Page 123). • Selecting STEEL changes the setting for POSITION DETECT (2.7.3.3) (Page 109) to Rising Edge and for ALGORITHM (2.7.3.1) (Page 109) to F. • Selecting CONCRETE changes the setting for POSITION DETECT (2.7.3.3) (Page 109) to Rising Edge and for ALGORITHM (2.7.3.1) (Page 109) to ALF.

Parameter view

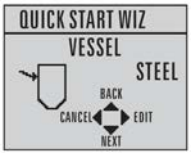

Edit mode

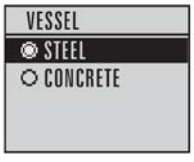

Response rate

Factory setting:	MED		
Setting range:	**Response rate**	**Fill rate per Minute/Empty rate per Minute**	**Damping Filter**
	SLOW	0.1 m/min (0.32 ft/min)	600 s
	MED	1.0 m/min (3.28 ft/min)	60 s
	FAST	10.0 m/min (32.8 ft/min)	0 s
Purpose:	Sets the reaction speed of the device to measurement changes in the target range. Selecting SLOW changes setting for AVERAGE AMOUNT (2.7.5.3.) (Page 112) to 0.9.		
Description:	Use a setting just faster than the maximum vessel filling or vessel emptying rate (whichever is greater).		

Parameter view

Edit mode

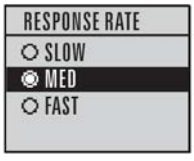

Units

Factory setting:	m
Setting range:	m, cm, mm, ft, in
Purpose:	Sensor measurement units.

Parameter view

Edit mode

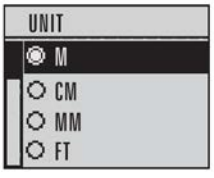

Operation

Factory setting:	LEVEL	
Setting range:	LEVEL	Distance to material surface referenced from Low calibration point
	SPACE	Distance to material surface referenced from High calibration point
	DISTANCE	Distance to material surface referenced from Sensor reference point
Purpose:	Sensor measurement units.	

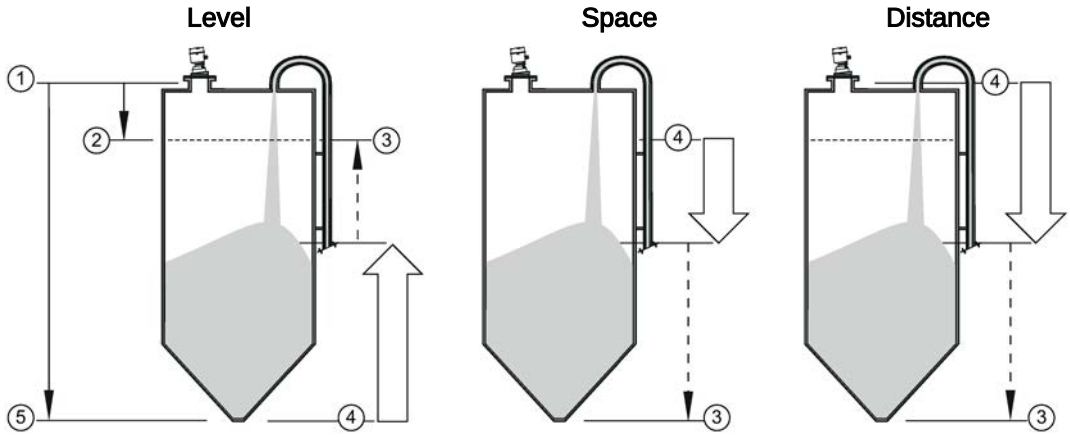

① sensor reference point ② high calibration point

③ 20 mA, 100% ④ 4 mA, 0%

⑤ low calibration point

Low calibration point

Factory setting:	40.000 m or 100.000 m
Setting range:	0.000 to 40.000 m or 0.000 to 100.000 m
Purpose:	Distance from Sensor Reference to Low Calibration Point: usually process empty level. See Operating (Page 50) for an illustration.

Parameter view

Edit mode

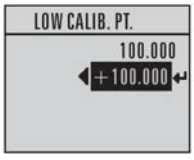

High calibration point

Factory setting:	0.000 m
Setting range:	0.000 to 40.000 m or 0.000 to 100.000 m
Purpose:	Distance from Sensor Reference Point to High Calibration Point: usually process full level. See Operating (Page 50) for an illustration.

Parameter view

Edit mode

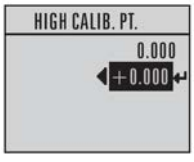

Wizard complete

Setting range:	BACK, CANCEL, FINISH (Display returns to 1.1 Quick Start Wizard menu when Quick Start is successfully completed.)
Description:	To transfer Quick Start values to the device and return to Program menu, press DOWN (Finish). Then press LEFT to return to Measurement mode.

6.5.4.2 Requesting an Echo Profile

1. Enter PROGRAM mode	Navigate to: **Level Meter > Diagnostics (3.) > Echo profile (3.1.)**.	
	Press RIGHT to request a profile.	
	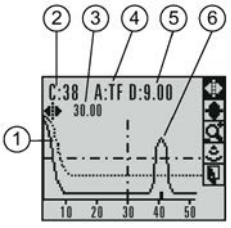 ① TVT ② Confidence ③ Distance from Low Calibration Point to vertical cross-hair ④ Algorithm: tF (trueFirst) ⑤ Distance from flange face to target ⑥ Echo	
2. Accessing features	Use UP or DOWN to scroll to an icon. When an icon is highlighted, that feature becomes active.	
	Move a cross-hair	Press RIGHT to increase the value, LEFT to decrease.
	Zoom into an area	Position the intersection of the cross-hairs at the center of that area, select Zoom, and press RIGHT. Press LEFT to Zoom out.
	Update the profile	Select Measure and press RIGHT.
	Return to the previous menu	Select Exit then press RIGHT.

6.6 Application example

The application is a vessel that takes an average 3 hours (180 minutes) to fill and 3 weeks to empty.

Fill rate = 0.08 m/minute [(Low Cal Pt. minus High Cal Pt.) / fastest of fill or empty time]
= (15.5 m – 1 m) / 180 min.
= 14.5 m /180 min. = 0.08 m/min.

Therefore SLOW response rate (0.1 m/minute) can be selected.

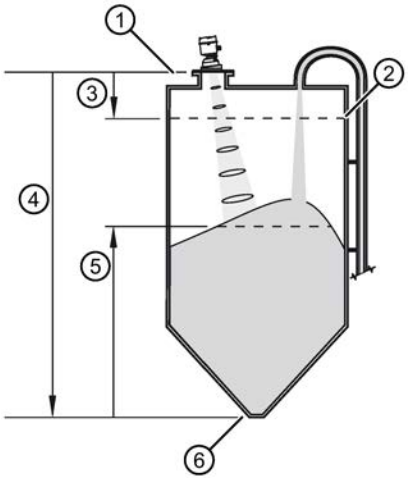

① sensor reference point
② high calibration point
③ 1.0 m
④ 15.5 m
⑤ level
⑥ low calibration point

Quick Start Parameter	Setting	Description
Vessel	STEEL	Selects vessel construction material.
Response Rate	SLOW	Resets fill rate and empty rate to 0.1 m/minute.
Units	m	Sensor measurement units.
Operation	LEVEL	Material level referenced from low calibration point
Low Calibration Point	15.5	Process empty level.
High Calibration Point	1.0	Process full level.
Wizard Complete	FINISH	Save new settings and exit Wizard

Operating 7

7.1 Remote operation

7.1.1 Operating via SIMATIC PDM

SIMATIC PDM is a software package used to commission and maintain process devices. Please consult the operating instructions or online help for details on using SIMATIC PDM. You can find more information on versions and compatibility at our website.

7.1.1.1 PDM function overview

SIMATIC PDM monitors the process values, alarms and status signals of the device. It allows you to display, compare, adjust, verify, and simulate process device data; also to set schedules for calibration and maintenance.

Parameters are identified by name and organized into function groups. See LCD menu structure (Page 179) for a chart and Changing parameter settings using SIMATIC PDM (Page 56) for more details. The menu structure for SIMATIC PDM is almost identical to that for the LCD.

See Parameters accessed via pull-down menus (Page 57) for parameters that do not appear in the menu structure in SIMATIC PDM.

7.1.1.2 SIMATIC PDM Version

Check the support page of our website to make sure you have the latest version of SIMATIC PDM, the most recent Service Pack (SP) and the most recent hot fix (HF): Siemens Industry Online Support (https://support.industry.siemens.com/cs/?lc=en-WW) Browse to **Product Support > Automation Technology > Process control systems > SIMATIC PCS 7 > System components > Plant Device Management > SIMATIC PDM.**

7.1.1.3 Updating the Electronic Device Description (EDD)

You can locate the EDD in Device Catalog, under **Sensors/Level/Echo/Siemens AG/SITRANS LR560.** The EDD revision must match the Firmware revision in the device.

To install a new EDD:

1. Go to LR560 (www.siemens.com/LR560) > **Support** > **Software downloads** to download the most up-to-date EDD.
2. Save files to your computer, and extract the zipped file to an easily accessed location.
3. Launch **SIMATIC PDM – Manage Device Catalog**, browse to the unzipped EDD file and select it.

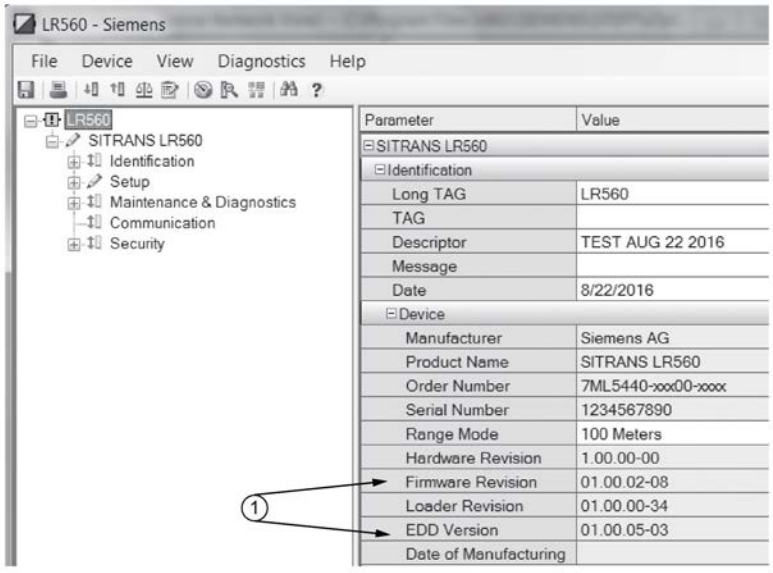

① Firmware and Electronic device description (EDD) revisions

7.1.1.4 Configuring a new device

Note

- Clicking on **Cancel** during an upload from device to SIMATIC PDM will result in some parameters being updated.
- Application Guides for setting up HART and Profibus PA devices with SIMATIC PDM can be downloaded from our website:
  LR560 (www.siemens.com/LR560).

---

1. Check that you have the most recent EDD, and if necessary update it. See Updating the Electronic Device Description (EDD) (Page 50).
2. Launch SIMATIC Manager and create a new project for the device.
3. Open the menu **Device – Master Reset** and click on **OK** to perform a reset to Factory Defaults.
4. After the reset is complete upload parameters to the PC/PG.
5. Configure the device via the Quick Start wizard.

Set Address

Open the menu **Device**>**Set Address,** enter a value for **New Address** and click on **Assign Address.**

7.1.1.5 Quick Start Wizard via SIMATIC PDM

The graphic Quick Start Wizard provides an easy step-by-step procedure that configures the device for a simple application.

Please consult the operating instructions or online help for details on using SIMATIC PDM.

1. If you have not already done so, check that you have the most up-to-date Electronic Device Description (EDD) for your device. [See Configuring a new device (Page 51).]
2. Launch SIMATIC Manager and create a new project. Application Guides for setting up HART and PROFIBUS PA devices with SIMATIC PDM can be downloaded from the product page of our website:
   LR560 (www.siemens.com/LR560)

Quick start

Note

- A reset to **Factory Defaults** should be performed before running the Quick Start Wizard if device has been used in a previous application. See Master Reset via SIMATIC PDM (Page 64).
- The Quick Start wizard settings are inter-related and changes apply only after you click on **FINISH AND DOWNLOAD** at the end of the last step to save settings offline and transfer them to the device.
- Do not use the Quick Start Wizard to modify individual parameters: for quick access to echo profile parameters, see Echo Profile via SIMATIC PDM (Page 59) or see Parameter Reference (Page 94) for a complete list. (Perform customization only after the Quick Start has been completed.)
- Click on **BACK** to return and revise settings or **CANCEL** to exit the Quick Start.
- For a vessel with obstructions see Auto False Echo Suppression via SIMATIC PDM (Page 60).

Launch SIMATIC PDM, open the menu **Device – Wizard - Quick Start**, and follow steps 1 to 4.

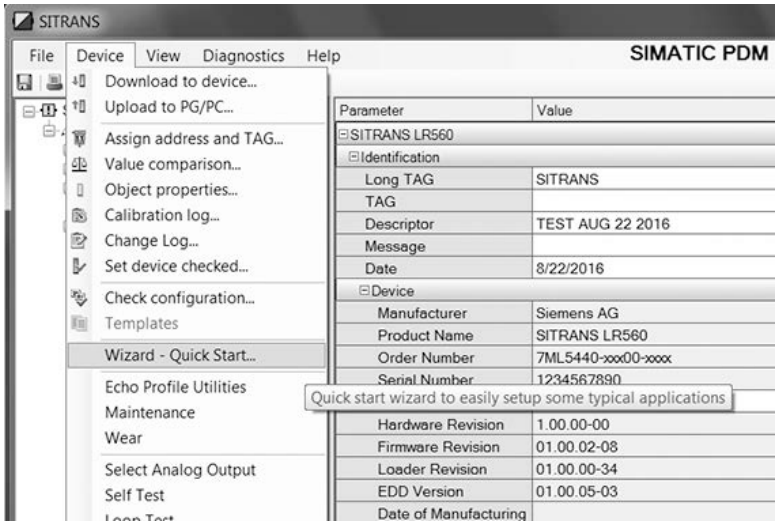

Step 1 – Identification

Note

The layout of the dialog boxes shown may vary according to the resolution setting for your computer monitor.

1. Click on **Read Data from Device** to upload Quick Start parameter settings from the device to the PC/PG and ensure PDM is synchronized with the device.
2. If required, change the language for the local user interface.
3. Click on **NEXT** to accept the default values. (Description, Message, and Installation Date fields can be left blank.)

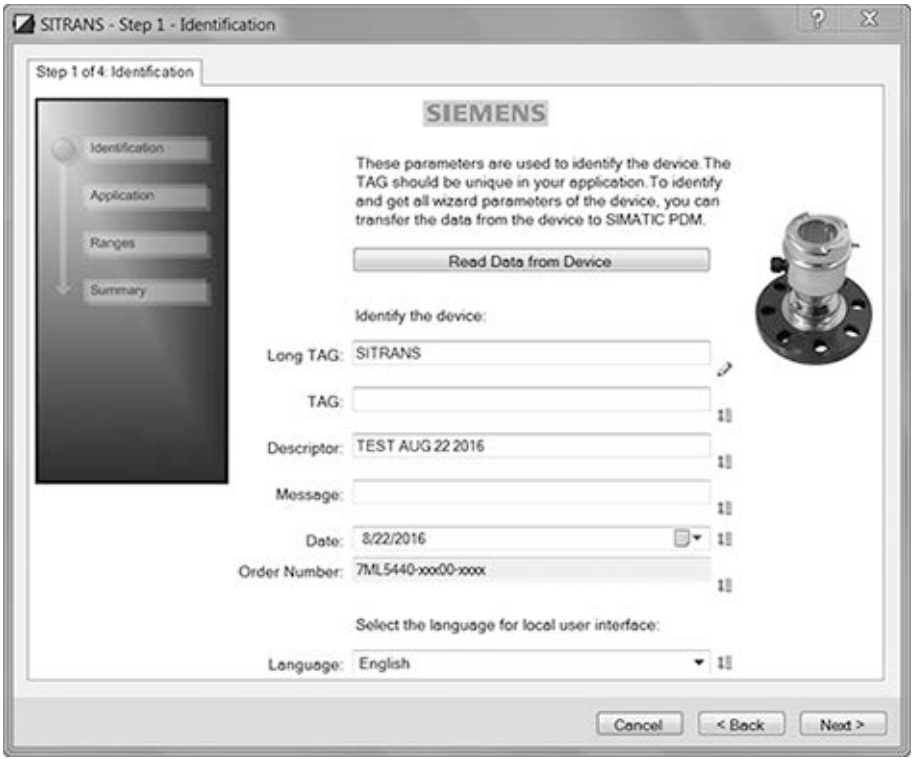

Step 2 – Application

Note

Application selection

- Selecting STEEL changes the setting for POSITION DETECT (2.7.3.3) (Page 109) to Rising Edge. and for ALGORITHM (2.7.3.1) (Page 109) to F.
- Selecting CONCRETE changes the setting for POSITION DETECT (2.7.3.3) (Page 109) to Rising Edge and for ALGORITHM (2.7.3.1) (Page 109) to ALF.

Select the application type (steel or concrete silo construction), operation type (level, space, or distance) and then click on **NEXT**.

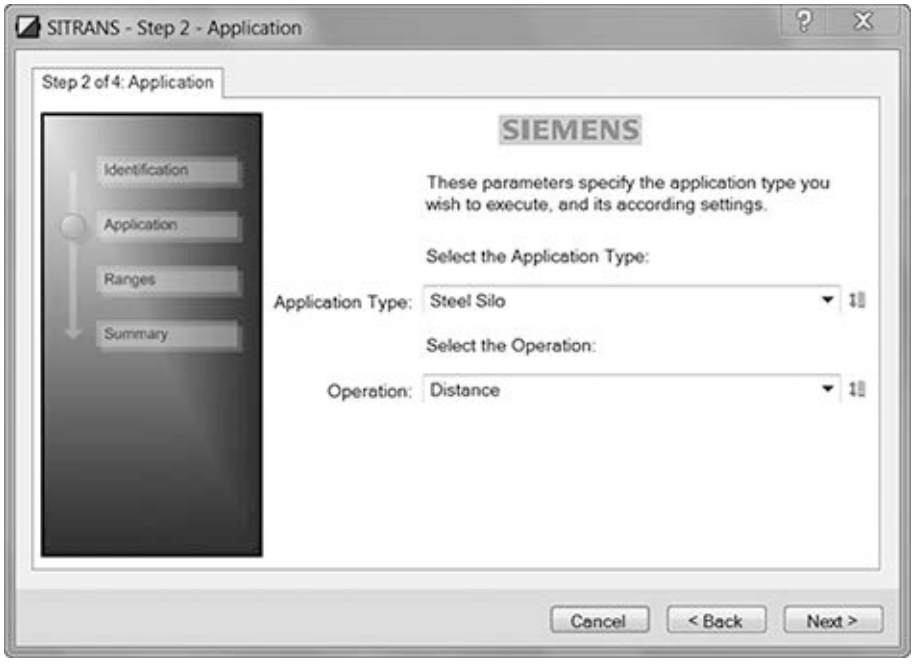

Step 3 – Ranges

Note

SLOW Response Rate

Selecting SLOW Response Rate changes setting for AVERAGE AMOUNT (2.7.5.3.) (Page 112) to 0.9.

Set the parameters, and click on **NEXT**.

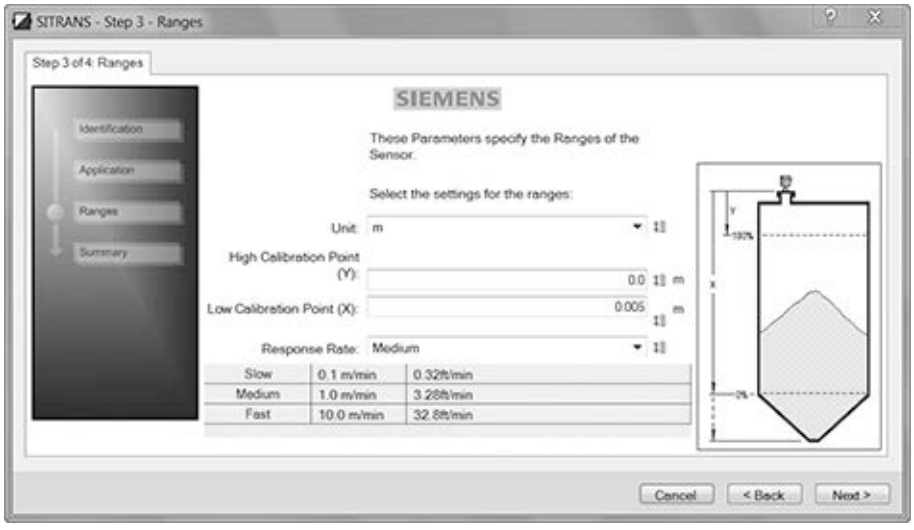

Step 4 – Summary

Check parameter settings, and click on **BACK** to return and revise values, **FINISH** to save settings offline, or **FINISH AND DOWNLOAD** to save settings offline and transfer them to the device.

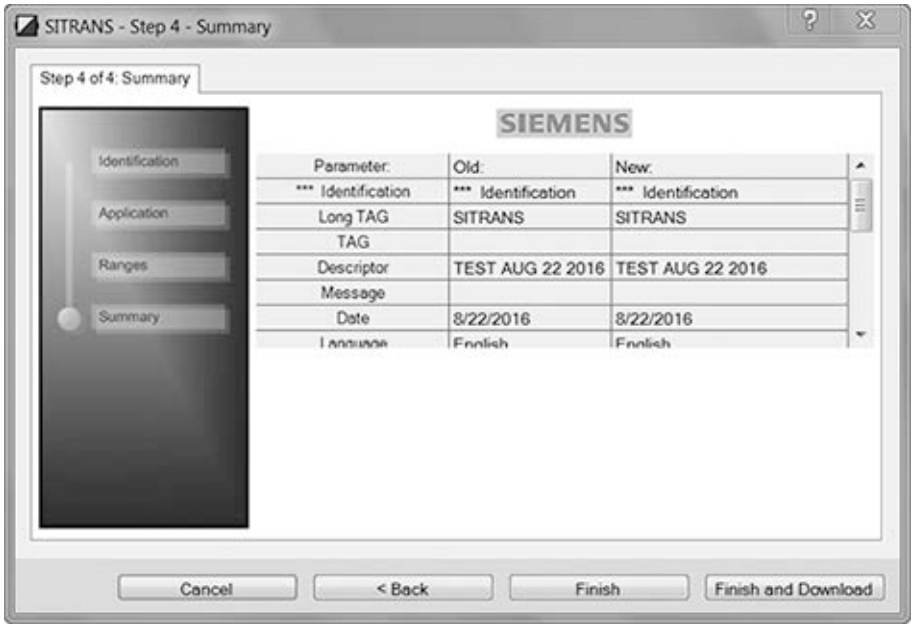

The message **Quick Start was successful** will appear. Click on **OK**.

7.1.1.6 Changing parameter settings using SIMATIC PDM

Note

- For a complete list of parameters, see Parameter Reference (Page 94).
- Clicking on **Cancel** during an upload from device to SIMATIC PDM will result in some parameters being updated.

Many parameters are accessed via pull-down menus in PDM. See Parameters accessed via pull-down menus (Page 57) for others.

1. Launch SIMATIC PDM, connect to device, and upload data from device.
2. Adjust parameter values in the parameter value field then **Enter**. The status fields read **Changed**.
3. Open the Device menu, click on **Download to device**, then use **File - Save** to save settings offline. The status fields are cleared.

7.1.1.7 Parameters accessed via pull-down menus

Click on **Device**, **View** or **Diagnostics** to open the associated pull-down menus.

Pull-down menus

Device menu	View menu	Diagnostics menu
Download to device Upload to PC/PG Update Diagnostic Status	Process variables (Page 157) Start Life List	Update diagnostics Device diagnostics
Assign address to TAG Value comparison Object properties Calibration log Set device checked		
Check configuration Templates		
Quick Start Wizard via SIMATIC PDM (Page 52)		
Echo profile utilities (Page 58) Maintenance (Page 62) Wear (Page 64) Select analog output (Page 63) Self test (Page 63) Loop test (Page 64) Configuration flag reset (Page 64) Master reset (Page 64) HART Communication (Page 65)		

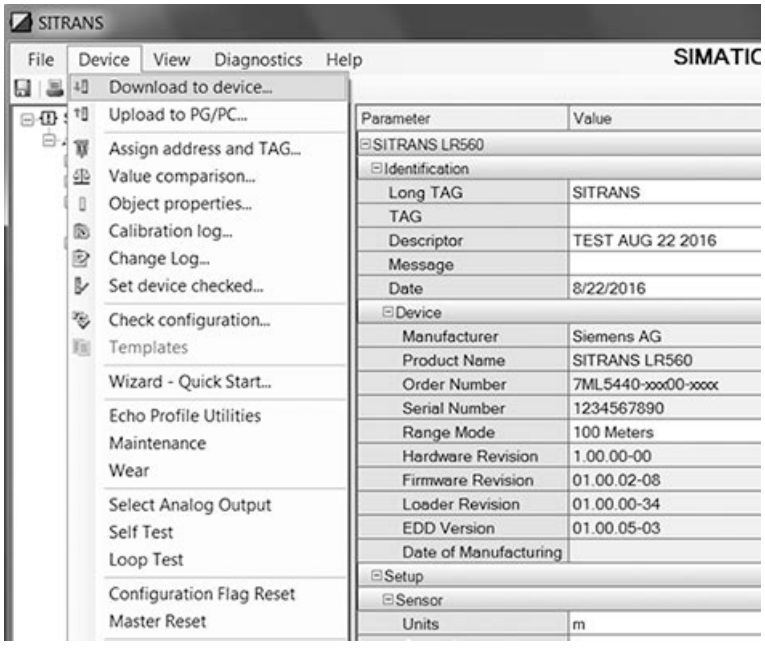

Echo profile utilities

Open the menu **Device – Echo Profile Utilities** and click on the appropriate tab for easy access to:

- Echo profile (Page 59)
- View Saved Echo Profiles (Page 59)
- TVT Shaper (Page 58)
- Auto False Echo Suppression (Page 60)
- Echo Setup (Page 62)

TVT Shaper

Note

Double click on each axis to see the X scale and data scale values. Right-click or Left-click on the axis and drag to reposition the scale.

This feature allows you to manually adjust the TVT to avoid false echoes caused by obstructions. For an explanation see Auto False Echo Suppression (Page 60).

Open the menu **Device – Echo Profile Utilities** and click the tab **TVT Shaper**.

- Turn Shaper Mode **On**.
- Initial profile graph is blank upon entry to dialog. Click on **Measure** to view and upload the current TVT from device.
- Change the position of the cursor on the TVT using the **Point+** and **Point–** buttons: raise and lower the TVT using **Offset+** and **Offset**-.
- Alternatively, enter values for **Point** and **Offset** directly into the dialog boxes.
- Click on **Transfer to Device**.

TVT shaper in PDM

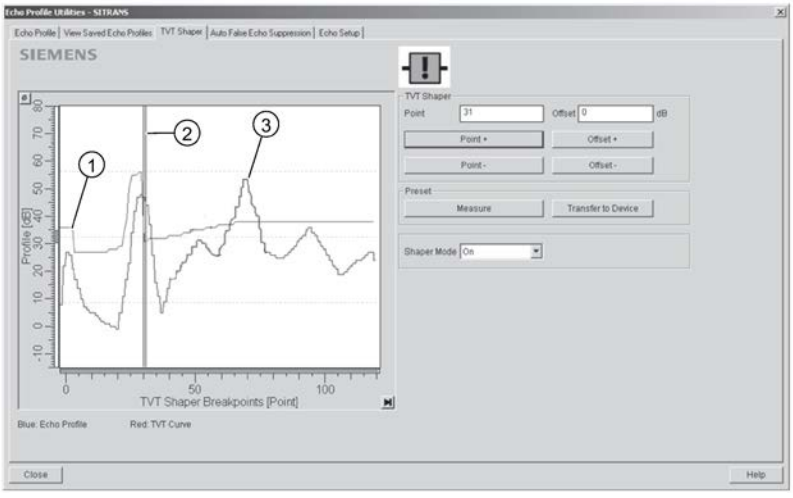

① TVT ② cursor ③ echo profile

Note

Transferring the new values to the device

If the TVT Shaper tab is closed without transferring new values to the device, the new values will appear in the PDM list even though they have not been transferred to the device.

Echo profile

Note

- Double click on each axis to see the Xscale and Data Scale values.
- To zoom in to a section of the profile, left-click and drag a marquee around it. Right click inside the window to zoom out.
- Expand or compress the x and/or y axes:
  - Left-click on the axis and drag in either direction to reposition the low end of the scale.
  - Right-click on the axis and drag in either direction to reposition the high end of the scale.
- After saving a profile click on **OK**, not the **x** button, to close the Echo Profile Utilities window, otherwise the profile will not be saved.

- In the **Echo Profile Utilities** window click the **Echo Profile** tab.
- Initial profile graph is blank upon entry to dialog. Click **Measure** to update the profile.
- It is recommended to use the **Detailed** resolution view of the echo profile for troubleshooting. For faster and more coarse views, the **Standard** resolution may be used.
- Click **Save** and in the new window enter a name and click **OK**.
- Click **OK** to exit.

View saved echo profiles

To view a saved profile, click on the tab **View Saved Echo Profiles**.

Echo profile data logging

You can store up to 60 profiles at a selected interval (maximum 60 minutes). Inside Echo Profile Utilities, in the **Echo Profile Time Based Storage** window:

- Enter the desired interval between stored profiles.
- Enter the maximum number of profiles to be stored (maximum 60).
- Click on **Start**. A message appears warning of the time delay and warning that all previous saved profiles will be overwritten. Click on **OK** to proceed. The new profiles will be saved with their date and time.
- Click on the tab **View Saved Echo Profiles** to view the stored profiles.

Auto false echo suppression

Note

- Ensure material level is below all known obstructions when using Auto False Echo Suppression to learn the echo profile. An empty or almost empty vessel is recommended.
- Note the distance to material level when learning the echo profile, and set Auto False Echo Suppression Range to a shorter distance to avoid the material echo being screened out.
- Set Auto False Echo Suppression and Auto False Echo Suppression Range during startup, if possible.
- If the vessel contains an agitator it should be running.
- Before adjusting these parameters, rotate the device for best signal (lower false-echo amplitude).

If you have a vessel with known obstructions, use Auto False Echo Suppression to prevent false echo detection. This feature can also be used if the device displays a false high level, or the reading is fluctuating between the correct level and a false high level.

The device learns the echo profile over the whole measurement range and the TVT is shaped around all echoes present at that moment. See Auto False Echo Suppression (Page 114) for a more detailed explanation.

The learned TVT will be applied over a specified range. The default TVT is applied over the remainder of the measurement range.

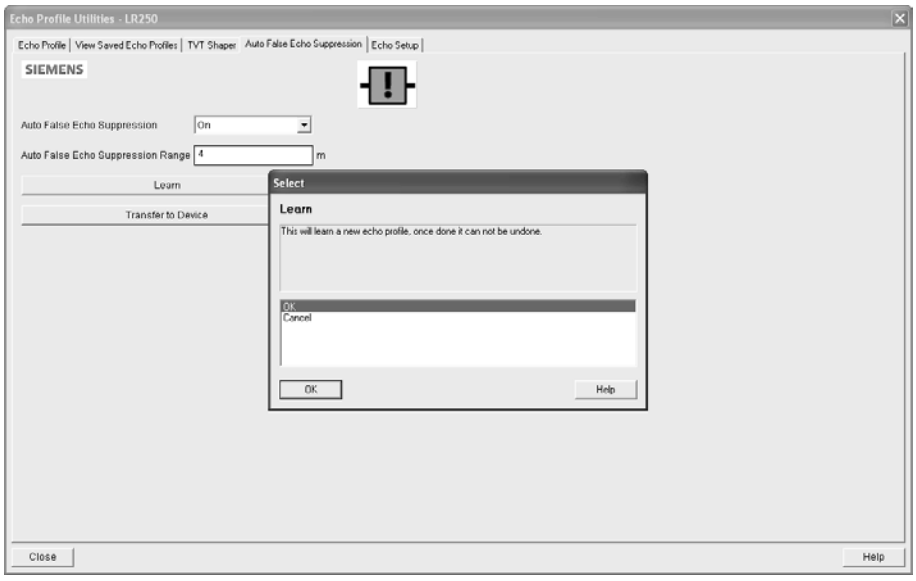

1. Make sure the material level is below all known obstructions.
2. Determine **Auto False Echo Suppression Range**. Measure the actual distance from the sensor reference point to the material surface using a rope or tape measure. Subtract 0.5 m (20") from this distance, and use the resulting value.
3. Open the menu **Device – Echo Profile Utilities** and click on the tab **Auto False Echo Suppression**.

4. Make sure **Auto False Echo Suppression Range** is **On**.
5. Enter the value for **Auto False Echo Suppression Range.**
6. Click **Learn**. The message appears: **'This will learn a new echo profile. Once done it cannot be undone'**. Click **OK**.
7. Once Auto TVT is complete click **Transfer to Device**. To exit click **Close**. Auto TVT is enabled and the learned TVT will be used.
8. To turn **Auto False Echo Suppression** off or on, reopen the **Auto False Echo Suppression** window, change the Auto False Echo Suppression to **Off** or **On**, click on **Transfer to Device.**

Before and after AFES example

Before Auto False Echo Suppression

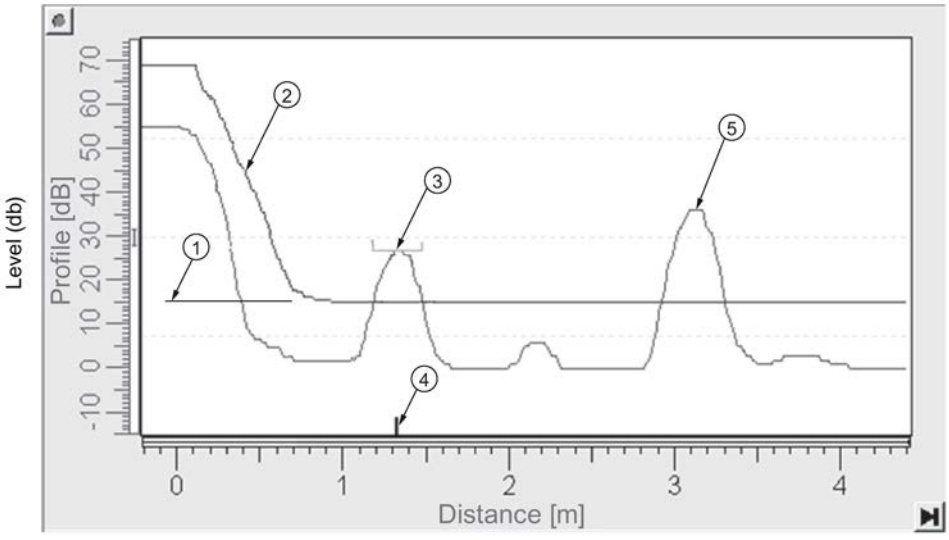

① TVT Hover Level
② Default TVT
③ False echo
④ Echo marker
⑤ Material level

After Auto False Echo Suppression

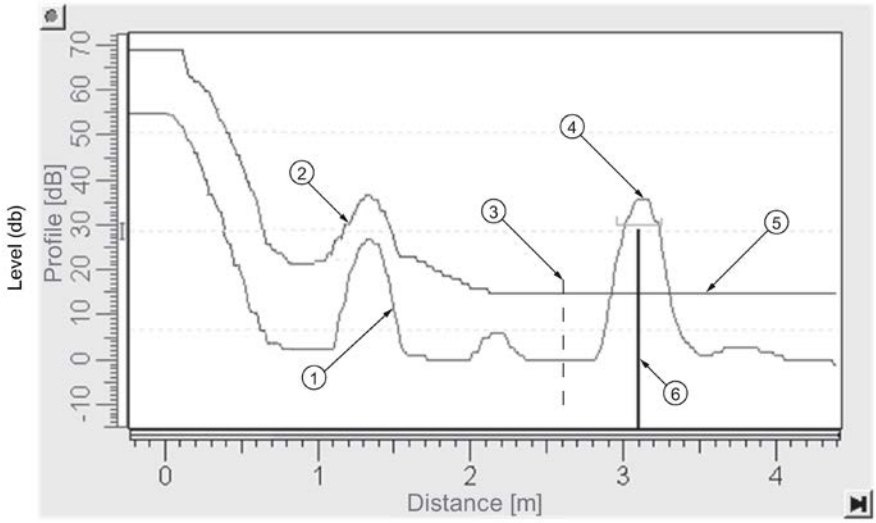

①	False echo	④	Material level
②	Learned TVT	⑤	Default TVT
③	Auto False Echo Suppression Range	⑥	Echo marker

Echo setup

Provides quick access to echo selection, filtering, and response rate parameters.

Open the menu **Device – Echo Profile Utilities** and click on **Echo Setup**.

Maintenance

You can set schedules and reminders for:

- device maintenance based on its projected lifetime
- sensor maintenance based on its projected lifetime
- service
- calibration

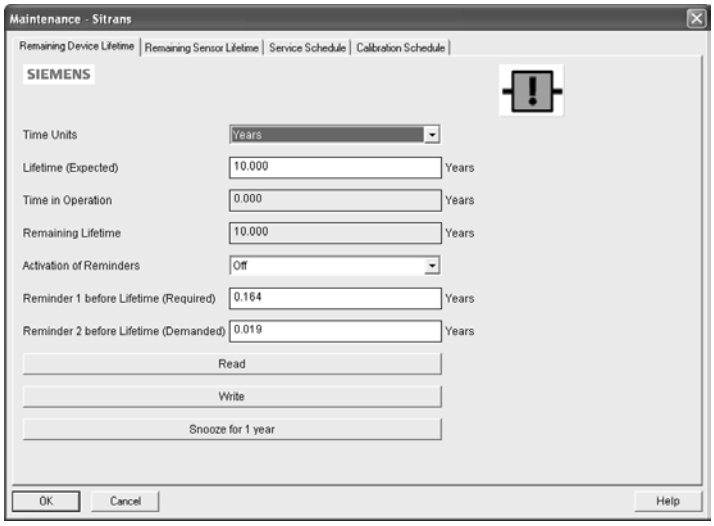

To set Device/Sensor Maintenance schedules:

1. Open the menu **Device – Maintenance**, and click on the **Remaining Device/Sensor Lifetime** tab.
2. Modify desired values, and if desired, set reminders for either or both of **Reminder 1 before Lifetime (Required)**/**Reminder 2 before Lifetime (Demanded)**.
3. Click **Write.**
4. Click **Read**, to see the effects of your modification.
5. Click **Snooze** to add a year to the Total Expected Device Life.

To set Service/Calibration schedules:

1. Open the menu **Device – Maintenance**, and click on the **Service/Calibration Schedule** tab.
2. Modify desired values and if desired, set reminders for either or both of **Reminder 1 before Lifetime (Required)**/**Reminder 2 before Lifetime (Demanded)**.
3. Click **Write.**
4. Click **Read**, to see the effects of your modification.
5. Click **Service/Calibration Performed** to reset the schedule.

Select analog output

Allows you to set the mA Output to report Level, Distance, or Space.

If a volume application is selected, mA Output is automatically set to **Volume**.

1. Open the menu **Device – Select Analog Output**.
2. **Select Analog Output** window displays the current setting: click **OK**.
3. Select a different setting and click **OK**.
4. **Select Analog Output** window displays the new setting: click **OK**.

Self test

Checks memory (RAM and Flash). If there are no errors, returns the message 'Self Test OK.' If errors are found, returns the message 'Self Test Fails'.

Open the menu **Device – Self Test**, select **Yes** and click **OK**.

Loop test

Note

The simulated AO (Analog Output) value influences output to the control system.

Allows you to input a simulated value (4 mA, 20 mA, or a user-defined value) in order to test the functioning of the mA connections during commissioning or maintenance of the device. The range is 3.56 mA to 22.6 mA, see **mA Output Value (2.6.6.).**

To simulate a user-defined mA value:

1. Open the menu **Device – Loop Test**.
2. Select **Other**, enter the new value, and click on **OK**. The message 'Field Device fixed at [new value]' appears. Click on **OK**. The Loop Test window remains open.
3. When you are ready to end simulation, select **End** and click on **OK** to return the device to the actual output value.

Configuration flag reset

To reset the configuration flag to zero, open the menu **Device – Configuration Flag Reset** and perform a reset.

Master reset

Factory Defaults

Factory Defaults resets all parameters to the default settings with the following exceptions:

- Device Address
- Write Protection
- Learned TVT curve
- Auto False Echo Suppression Range

1. Open the menu **Device – Master Reset**, select **OK** to perform a reset to Factory Defaults.
2. After the reset is complete upload parameters to the PC/PG. (If you are performing a reset after replacing the device with a different instrument, do not upload parameters to the PC/PG).

Wear

Reports the number of days the device has been operating, and the number of times it has been powered up.

Open the menu **Device – Wear** to view:

- Powered Days
- Power-on Resets

Note

Powered days are whole days only. Fractional days are truncated.

HART Communication

Sets the number of request/response preambles (default 5).

The preamble consists of three or more hexadecimal FF characters (all 1s). This allows the receiving modem to get its frequency-detection circuits synchronized to the signal after any pause in transmission.

We recommend you do not change the default value (5).

Process variables

To compare outputs in real time open the menu **View – Process Variables** and click on **Overview** to see reading (level, space, distance); analog output; device status; and current electronics temperature.

To see highest and lowest electronics temperatures, navigate to **Level Meter > Maintenance and Diagnostics > Electronics Temperature**.

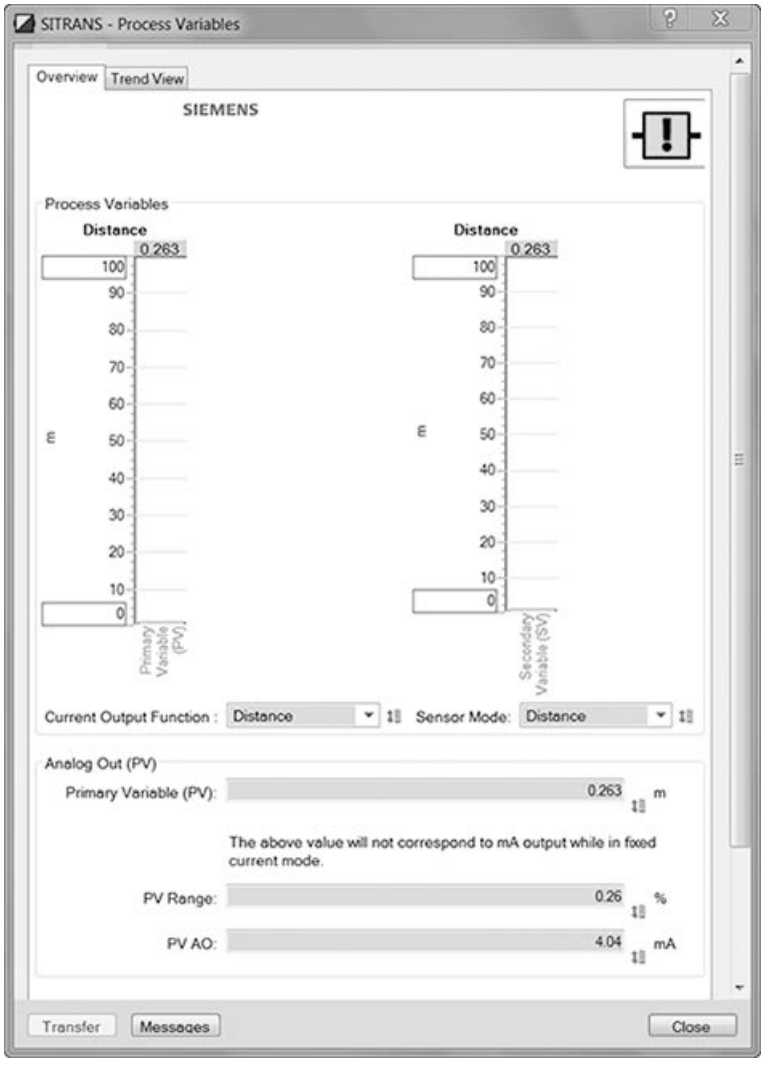

Trend

Open the menu **View – Process Variables** and click on **Trend**.

The mA Output follows Primary Value (PV), and can be set to either Level, Space, or Distance.
Select analog output (Page 63)

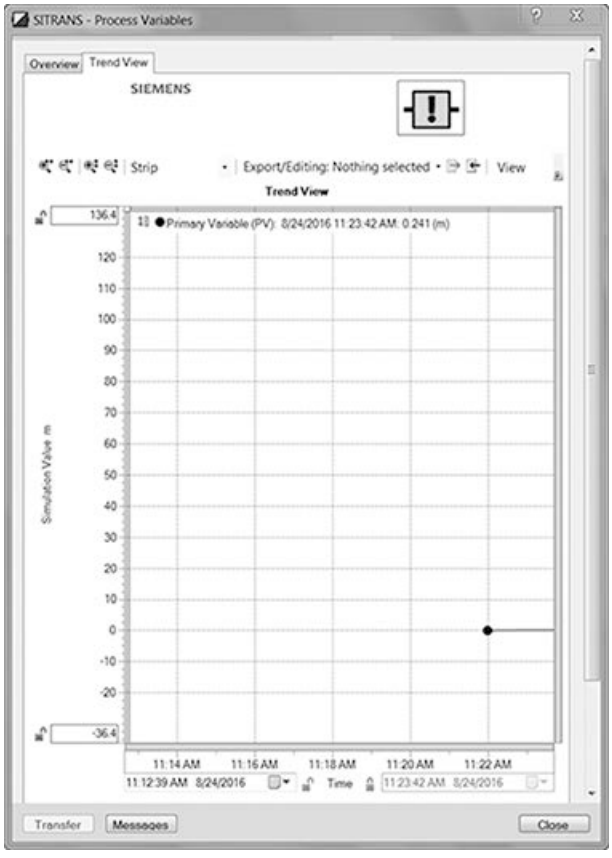

Device status

Open the menu **Diagnostics – Device Diagnostics** to view Diagnostics, Device Status, Hardware/Firmware (HW/FW) Status, and Maintenance status.

In the Diagnostics window, click on **Update diagnostics** to update diagnostic information and refresh linked icons.

7.1.2 Operating via FDT (field device tool)

FDT is a standard used in several software packages designed to commission and maintain field devices such as SITRANS LR560. Two commercially available FDTs are PACTware and Fieldcare.

Functionally, FDT is very similar to PDM. See Operating via SIMATIC PDM (Page 50)

- To configure a field device via FDT, you need the DTM (Device Type Manager) for the device.
- To configure a field device via SIMATIC PDM, you need the EDD (Electronic Data Description) for the device.

Device Type Manager (DTM)

A DTM is a type of software that 'plugs into' FDT. It contains the same information as an EDD but an EDD is independent of the operating system.

SITRANS DTM

- SITRANS DTM is an EDDL interpreter developed by Siemens to interpret the EDD for that device.
- To use SITRANS DTM to connect to an instrument, you must first install SITRANS DTM on your system and then install the instrument EDD written for SITRANS DTM.
- You can download SITRANS DTM from the Siemens service and support website at: Siemens Industry Online Support (https://support.industry.siemens.com/cs/?lc=en-WW)
- Click on **Product Support**, then go to **Product Information** > **Automation Technology** > **Sensor systems** > **Process Instrumentation** > **Software & Communications**

The device EDD

The SITRANS LR560 HART and Profibus PA EDDs for SITRANS DTM can be downloaded from the product page of our website (www.siemens.com/LR560). Go to **Support** and click on **Software Downloads**.

Configuring a new device via FDT

The full process to configure a field device via FDT is outlined in an application guide which can be downloaded from the product page of our website (www.siemens.com/LR560). Go to **Support** and click on **Application Guides**.

7.1.3 Operating via AMS Device Manager

AMS Device Manager is a software package that monitors the process values, alarms and status signals of the device. Please consult the operating instructions or online help for details on using AMS Device Manager. You can find more information at:

Emerson (http://www.emersonprocess.com/AMS/)

7.1.3.1 Functions in AMS Device Manager

Note

While the device is in PROGRAM mode the output remains fixed and does not respond to changes in the device.

AMS function overview

AMS Device Manager monitors the process values, alarms and status signals of the device. It allows you to display, compare, adjust, verify, and simulate process device data.

Parameters organized into three main function groups allow you to configure and monitor the device:

- Configure/Setup
- Device Diagnostics (read only)
- Process Variables (read only)

See AMS Menu Structure (Page 87) for a chart and Changing parameter settings using AMS Device Manager (Page 75) for more details. The menu structure for AMS Device Manager is almost identical to that for the LCD.

Features of AMS Device Manager

The graphic interface in the radar device makes monitoring and adjustments easy.

Feature	Function
Quick Start Wizard via AMS Device Manager (Page 71)	Device configuration for simple applications
Echo Profile (Page 80)	Echo profile viewing
TVT (Page 80)	Screen out false echoes
Process variables (Page 85)	Monitor process variables and level trend
Security (Page 83)	Protect security and communication parameters from modification by the maintenance user

Electronic Device Description (EDD)

SITRANS LR560 requires the EDD for AMS Device Manager version 9.0.

You can locate the EDD in Device Catalog, under Sensors/Level/Echo/Siemens Milltronics/SITRANS LR560. Check the product page of our website (www.siemens.com/LR560), under **Support** > **Software Downloads**, to make sure you have the latest version of the EDD for AMS Device Manager. If you need to install a new EDD, see Configuring a new device below.

Configuring a new device

1. Check our website to make sure you have the most recent EDD.
   website (www.siemens.com/LR560)
   Go to **Support > Software Downloads** and if necessary download it. Save the files to your computer, and extract the zipped file to an easily accessed location.
2. Launch **AMS Device Manager– Add Device Type**, browse to the unzipped EDD file and select it.

Startup

1. **Launch AMS Device Manager**. (Application Guides for setting up HART devices with AMS Device Manager can be downloaded from our website:
   website (www.siemens.com/LR560)
2. In **Device Connection View** right-click on the device icon and select **Scan Device** to upload parameters from the device.
3. Double click the device icon to open the startup screen. The startup screen shows device identification details and a navigation window on the left side of the screen.

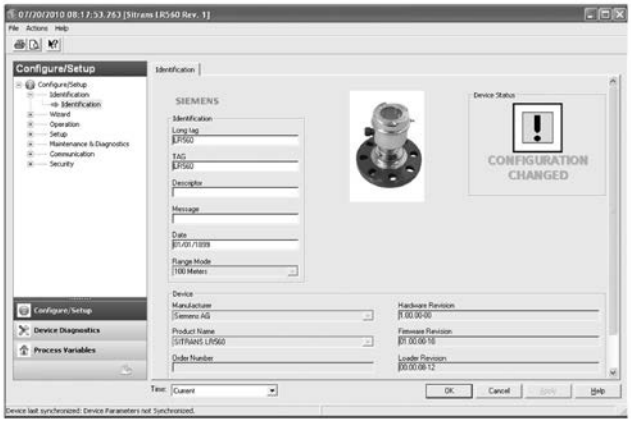

Master reset

Note

Device Address (5.1.) remains unchanged if the reset command is sent remotely (via AMS, PDM, DTM, FC375) but is reset to 0 if the reset command is sent via HMI.

- Navigate to **Configure/Setup > Operation**
- In the **General** field click on **Master Reset** and accept the option **Factory Defaults**.

Pull-down menu access

① Action menu items

A pull-down menu under **Actions** gives alternative access to several features.

Scan Device

- Open the menu **Actions – Scan Device**.
- **Scan Device** uploads parameters from the device (synchronizes parameters).

Device configuration

1. Navigate to **Configure/Setup > Operation** and click to open the dialog window.
2. In the **General** field, click on **Master Reset** and perform a reset to Factory Defaults.

3. Open the pull-down menu **Actions – Scan Device** to synchronize parameters (upload parameters from the device to AMS).
4. Configure the device via the Quick Start wizard.

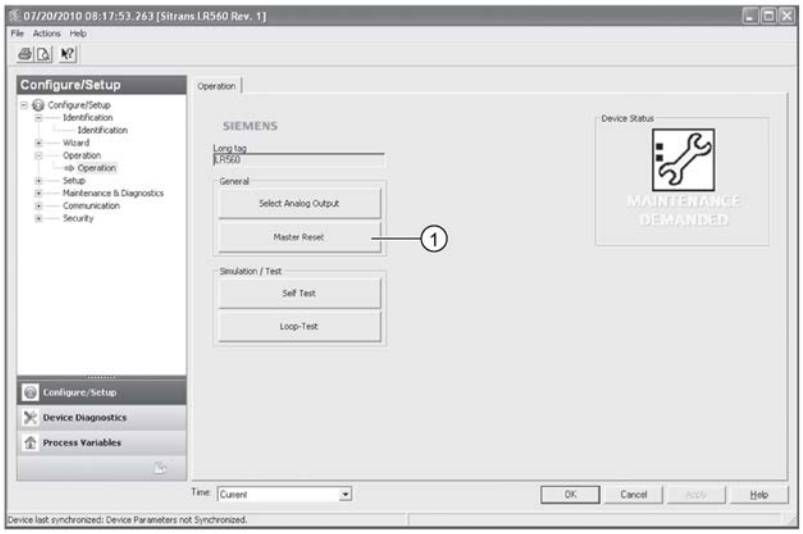

① Master Reset

Quick Start Wizard via AMS Device Manager

Note

- A reset to Factory Defaults should be performed before running the Quick Start Wizard if device has been used in a previous application. See Master Reset (Page 69).
- The layout of the dialog boxes shown may vary according to the resolution setting for your computer monitor.
- At each step, you can accept the default values without modification and click on the next step to proceed.
- After modifying parameters click on **Apply** inside the Quick Start window to write the new values to the device.
- Click on **OK** only if you wish to update all parameters to the device and close AMS.

A Wizard provides an easy step-by-step Quick Start procedure that configures the device for a simple application.

Quick Start Wizard via AMS Device Manager

Step 1 – Identification

1. Navigate to **Configure/Setup > Wizard > Quick Start**.
2. Click on **Step 1**.
3. You can accept the default values without modification. (Description, Message, and Installation Date fields can be left blank.) If desired, make changes then click on **Apply**.

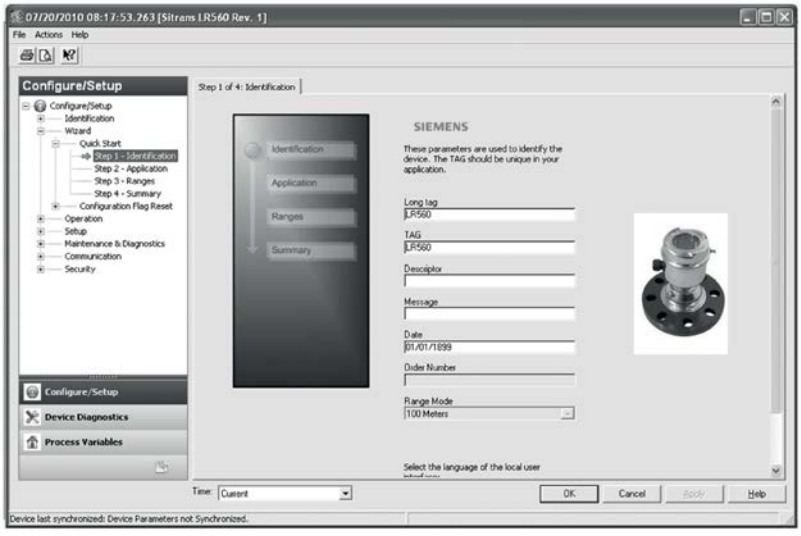

Step 2 – Application

Note

Application type settings

- Selecting either STEEL or CONCRETE does a functional reset, see Master reset (Page 69).
- Selecting STEEL changes the setting for POSITION DETECT (2.7.3.3) (Page 109) to Rising Edge. and for ALGORITHM (2.7.3.1) (Page 109) to F.
- Selecting CONCRETE changes the setting for POSITION DETECT (2.7.3.3) (Page 109) to Rising Edge and for ALGORITHM (2.7.3.1) (Page 109) to ALF

---

1. Click on **Step 2**.
2. Select the application type (Steel or Concrete) and the operation (Level, Space, or Distance).
3. Click on **Apply**.

Step 3 – Ranges

Note

Response rate

Selecting SLOW Response Rate changes setting for AVERAGE AMOUNT (2.7.5.3.) (Page 112) to 0.9.

---

1. Click on **Step 3**.
2. Change units if desired (in meters by default).
3. Set High and Low Calibration points.
4. Set Response Rate.
5. Click on **Apply**.

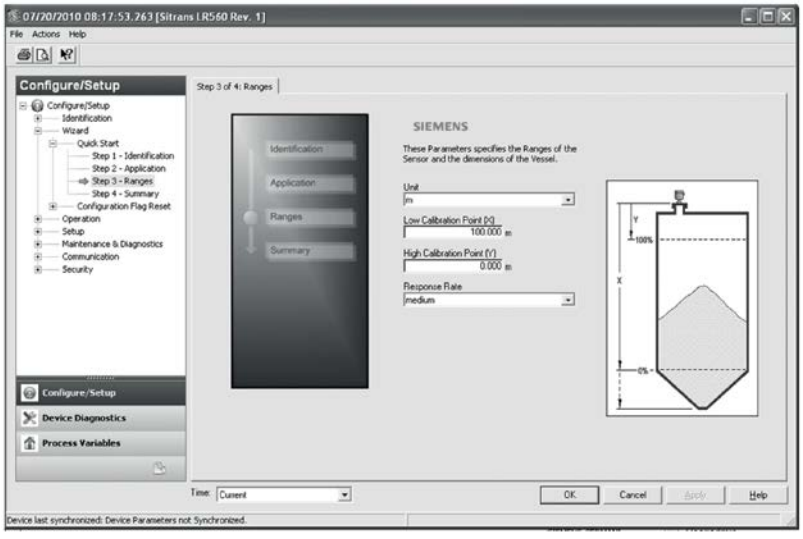

Step 4 – Summary

1. Check parameter settings, and click on **Cancel** to abort, or **Apply** to transfer values to the device.

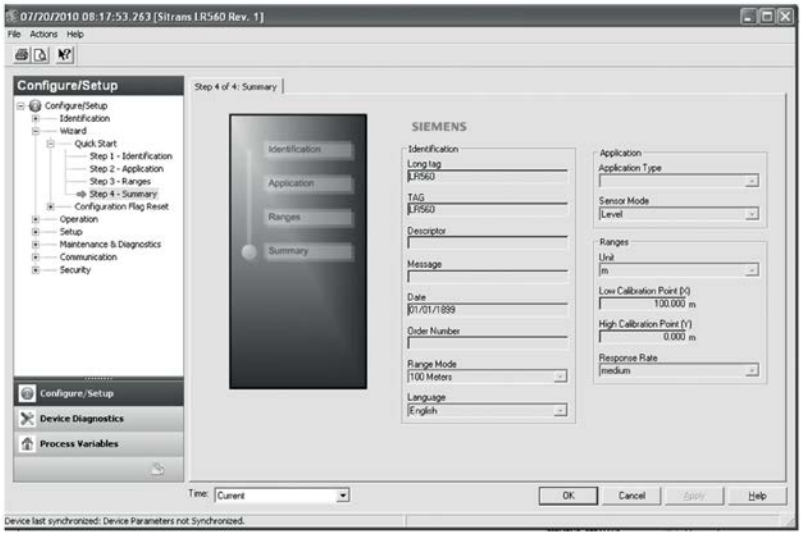

Changing parameter settings using AMS Device Manager

Note

For a complete list of parameters, see Parameter Reference (Page 94).

For more detailed explanations of the parameters listed below see the pages referenced.

---

1. Adjust parameter values in the parameter value field in Configure/Setup view, then click on **Apply** to write the new values to the device. The parameter field will display in yellow until the value has been written to the device.
2. Click **OK** only if you wish to update all parameters and exit AMS.

Operation

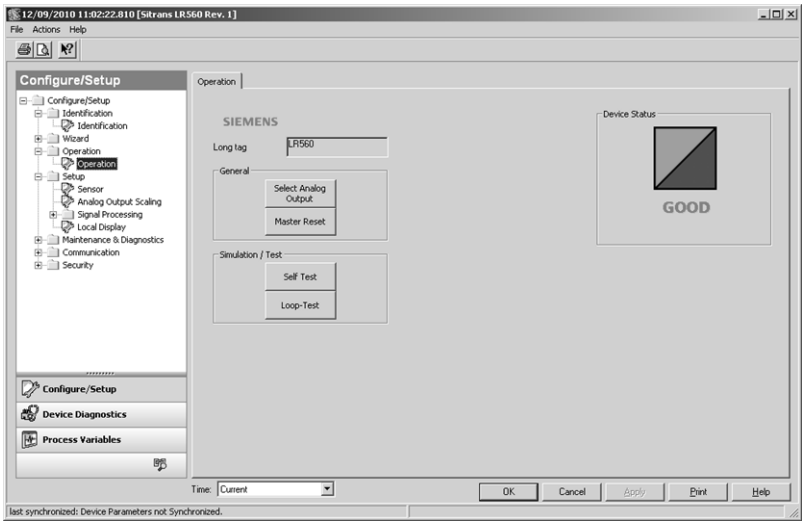

Navigate to **Configure/Setup > Operation** and click on **Operation** to open the dialog window for access to:

General

- Select Analog Output, see Select analog output (Page 63)
- Master Reset, see Master reset (Page 69)

Simulation/Test

- Self Test, see Self test (Page 63)
- Loop Test, see Loop test (Page 64)

Setup

Note

For more detailed explanations of the parameters listed below see the pages referenced.

Sensor

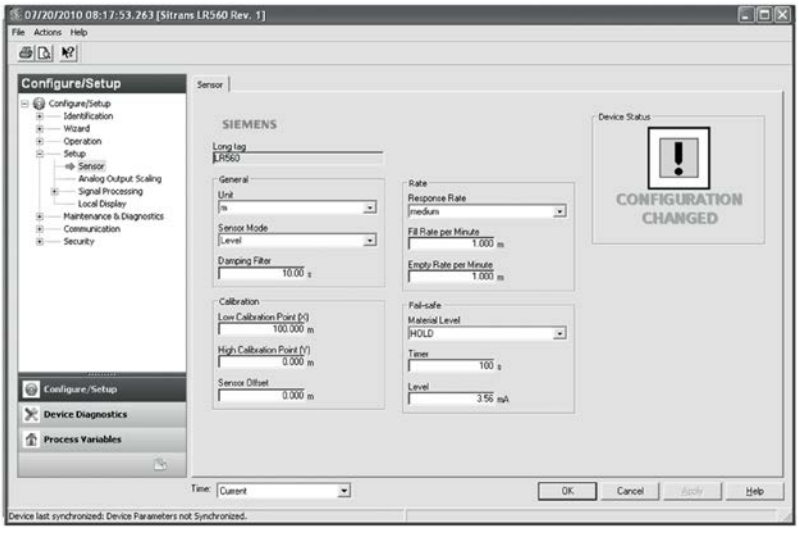

Navigate to **Configure/Setup > Setup** and click on **Sensor** for access to:

SENSOR (2.2.) (Page 100)

- Units
- Sensor Mode
- Damping Filter

CALIBRATION (2.3.) (Page 101)

- Low Calibration Point
- High Calibration Point
- Sensor Offset

RATE (2.4.) (Page 102)

- Response Rate
- Fill Rate per Minute
- Empty Rate per Minute

FAIL-SAFE (2.5.) (Page 104)

- Material level
- Timer
- Level

Analog Output Scale

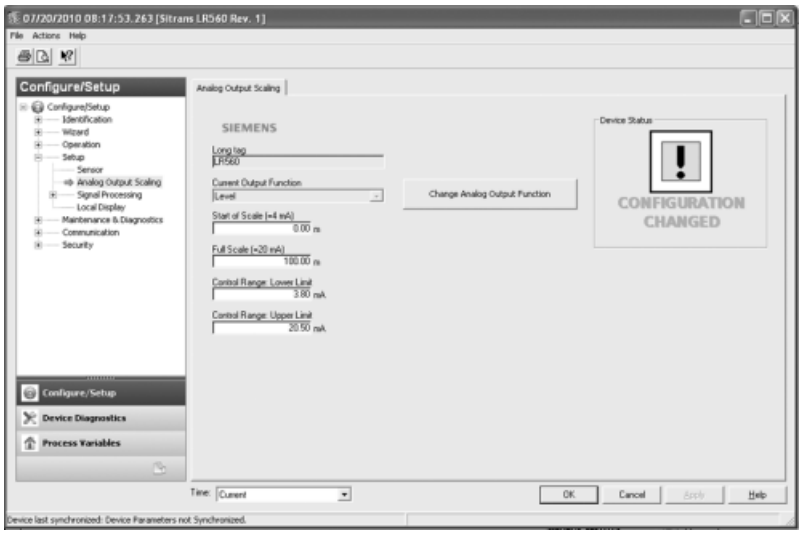

Navigate to **Configure/Setup > Setup** and click on **Analog Output Scaling** for access to: Analog Output Scaling, see ANALOG OUTPUT SCALING (2.6.) (Page 105)

- Current Output Function
- 4 mA Setpoint
- 20 mA Setpoint
- Minimum mA Limit
- Maximum mA Limit

Signal Processing

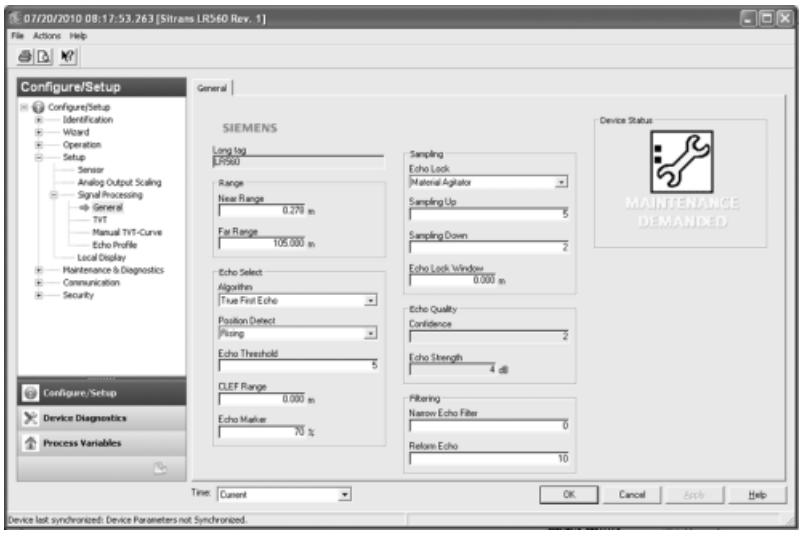

General

Navigate to **Configure/Setup > Setup > Signal Processing** and click on **General** for access to:

SIGNAL PROCESSING (2.7.) (Page 108)

- Near Range
- Far Range

ECHO SELECT (2.7.3.) (Page 109)

- Algorithm
- Position Detect
- Echo Threshold
- CLEF Range
- Echo Marker

SAMPLING (2.7.4.) (Page 110)

- Echo Lock
- Sampling Up
- Sampling Down
- Echo Lock Window

ECHO QUALITY (2.7.6.) (Page 112)

- Confidence
- Echo Strength

FILTERING (2.7.5.) (Page 112)

- Narrow Echo Filter
- Reform Echo

TVT

Modify the TVT to screen out false echoes. TVT SHAPER (2.9.) (Page 114)

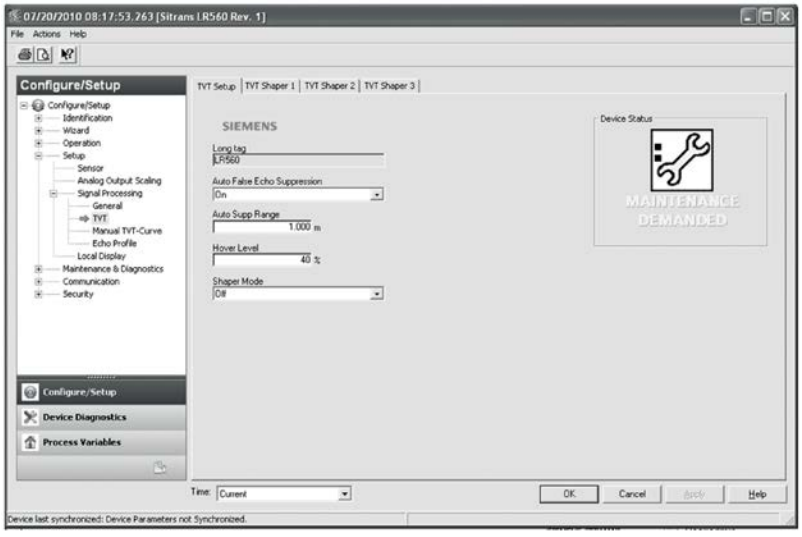

Navigate to **Configure/Setup > Setup > Signal Processing** and click on **TVT**. Click on one of the two tabs to access the parameters listed:

TVT Setup

TVT SETUP (2.8.) (Page 113)

- Auto False Echo Suppression
- Auto False Echo Suppression Range
- Hover Level
- Shaper Mode

TVT Shaper

- Shaper breakpoints 1 to 40. (Turn **TVT Setup/Shaper Mode** on to activate.)

Manual TVT Curve

Displays the effects of the TVT shaper modifications. Navigate to **Configure/Setup > Setup > Signal Processing** and click on **Manual TVT Curve**.

Echo Profile

- Navigate to **Configure/Setup > Setup > Signal Processing** and click on **Echo Profile**.
- To view a previous profile, click the drop-down arrow on the Time field and select the desired profile (note: available only using AMS version 10.1 or later).

Local Display

Navigate to **Configure/Setup > Setup > Local Display** for access to:

- Language
- LCD Contrast, see LCD CONTRAST (4.6.) (Page 124)
- LCD Backlight, see LCD BACKLIGHT (4.5.) (Page 124)

7.1.3.2 Maintenance and diagnostics

Navigate to **Maintenance and Diagnostics** for access to:

Remaining device lifetime, see REMAINING DEVICE LIFETIME (3.6) (Page 118)

- Lifetime (expected)
- Remaining lifetime
- Time in operation
- Activation of reminders
- Reminder 1 before lifetime (Required)
- Reminder 2 before lifetime (Demanded)

1. Open the window remaining device lifetime.
2. After modifying values/units as required, click on Apply to accept the change.
3. Click on Snooze for 1 Year to add a year to the Total expected device life.

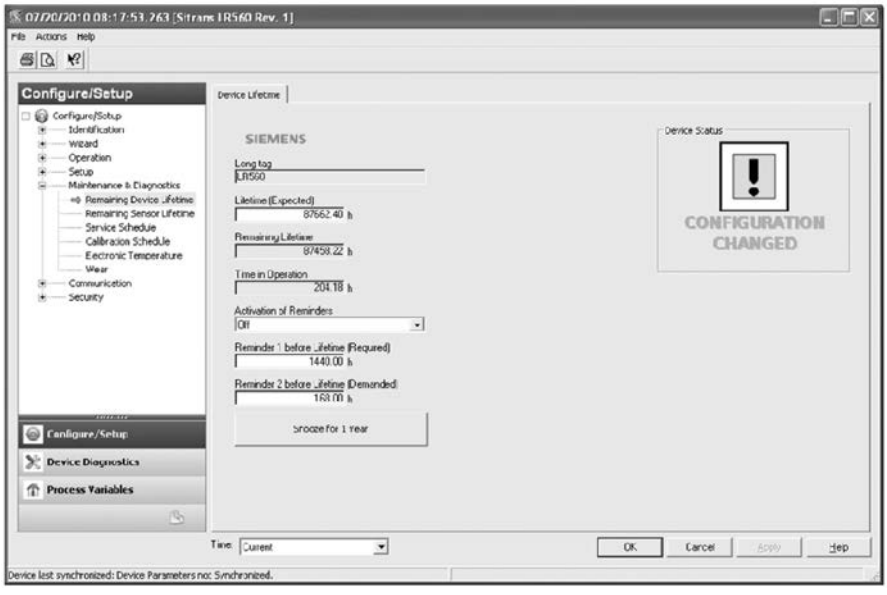

Remaining sensor lifetime, see REMAINING SENSOR LIFETIME (3.7.) (Page 120)

- Lifetime (expected)
- Time in operation
- Remaining lifetime
- Activation of reminders
- Reminder 1 before lifetime (Required)
- Reminder 2 before lifetime (Demanded)

1. Open the window Remaining sensor lifetime.
2. After modifying values/units as required, click on Apply to accept the change.
3. Click on Sensor replaced to reset Remaining lifetime to 0 hours.
4. Click on Snooze for 1 Year to add a year to the Total expected sensor life.

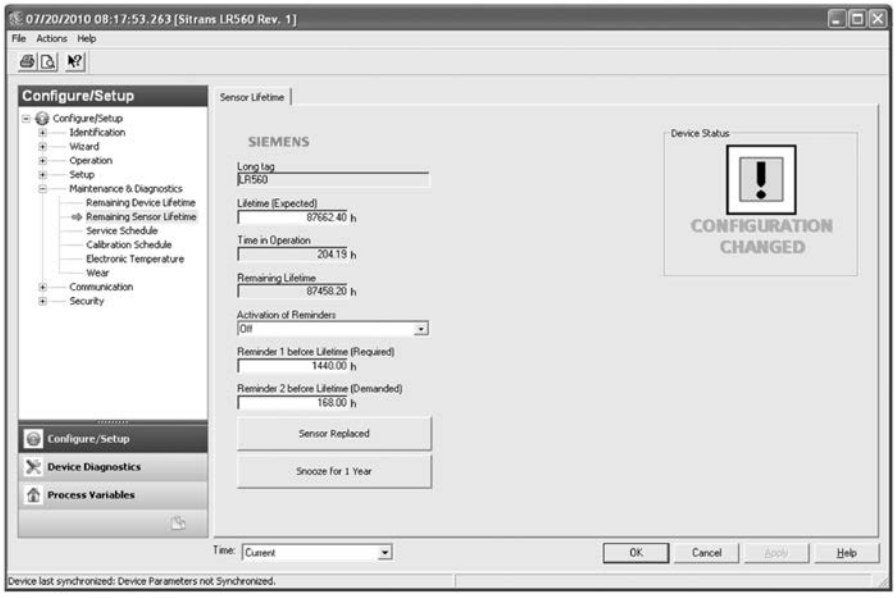

Service schedule, see SERVICE SCHEDULE (4.7.) (Page 124)

- Service interval
- Time since last service
- Time until next service
- Activation of reminders
- Reminder 1 before service (Required)
- Reminder 2 before service (Demanded)

Click on **Service Performed** to reset **Time until next service** to the full service interval.

Calibration schedule, see CALIBRATION SCHEDULE (4.8.) (Page 127)

- Calibration interval
- Time since last calibration
- Time until next calibration
- Activation of reminders
- Reminder 1 before Calibration (Required)
- Reminder 2 before Calibration (Demanded)

Electronic Temperature, see ELECTRONIC TEMPERATURE (3.5.) (Page 117)

- Electronic temperature
- Lowest value
- Highest value

Wear, see POWERED HOURS (4.3.) (Page 123)

- Time in operation (Reset to 0 after clicking Sensor Replaced)
- Poweron resets

7.1.3.3 Communication

Navigate to **Communication** to read the following:

Tag; Manufacturer's ID; Device ID; Product ID; Device Revision; EDD Revision; Universal Command Revision

7.1.3.4 Security

Navigate to **Configure/Setup > Security** to access:

Remote access, see REMOTE LOCKOUT (5.2.) (Page 131)

Note

If access control is changed to limit remote access, it can only be reset via the handheld programmer.

- Write Protect (read only)

Local Access

- Local Operation Enable

Local access

- Local Operation Enable

See also Password protection (Page 85)

7.1.3.5 Device Diagnostics

Click on the **Device Diagnostics** bar at the bottom of the navigation window for access to **Device Status**.

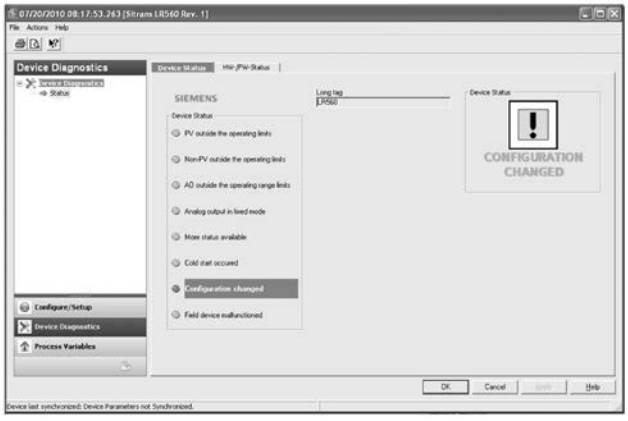

Hardware/Firmware Status

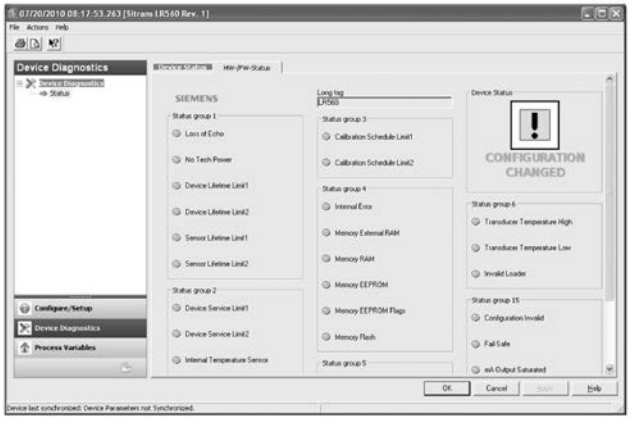

Process variables

To compare outputs in real time, click on **Process Variables** at the bottom of the navigation window for access to:

Process Variables

- Values (level, space, distance)
- Analog Output
- Trend View

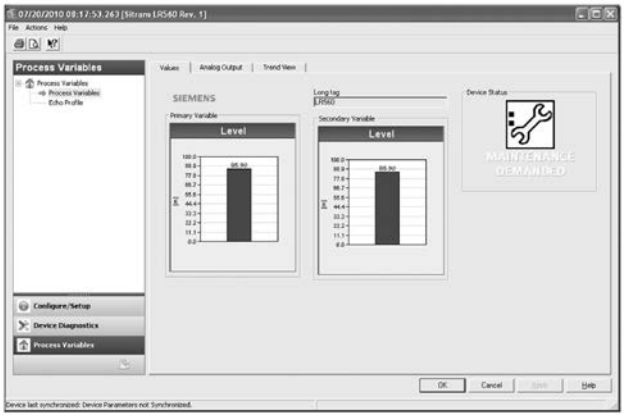

Echo Profile

- Navigate to **Process Variables>Echo Profile**.
- To view a previous profile, click the drop-down arrow on the **Time** field and select the desired profile (note: available only using AMS version 10.1 or later).

Password protection

An AMS Device Manager administrator can configure the user to require a password. The use of passwords is recommended. A password should be assigned to the ’admin’ username immediately after installing AMS Device Manager.

Each user is given an AMS Device Manager username and password and required to enter them when they start AMS Device Manager. Access to functions depends on the level of permissions granted.

Login types

- standard, local, or domain

A standard user can change their password in AMS Device Manager. A Local or Domain Windows user cannot change their password using AMS Device Manager and must request their network administrator to do so.

User Manager utility

Usernames, passwords, and permissions, are assigned to users by an AMS Device Manager administrator, using the User Manager utility on the Server Plus Station. Only a user with AMS Device Manager System Administration rights can log in to User Manager.

To configure a new user/edit existing user:

1. From the Windows taskbar select: **Start > AMS Device Manager > User Manager**.
2. In the User Manager window click on **Add User**.

The Add User Wizard dialog allows you to:

- select a user type, standard (AMS Device Manager) or Window user.
- enter the username and password, and set permissions
- edit existing users

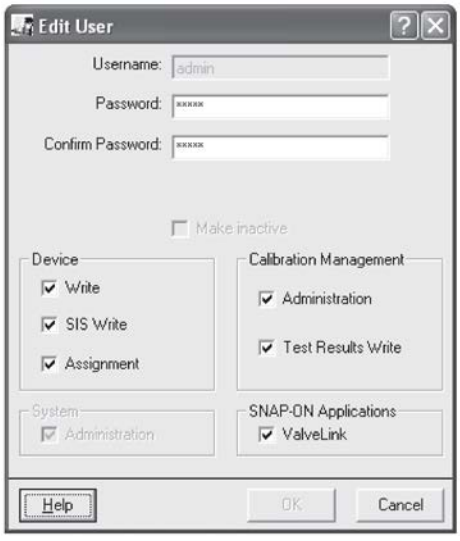

7.1.3.6 AMS Device Menu Structure

Configure/Setup Function Group	Parameter number
IDENTIFICATION	
Identification	
Identification (tab)	
Long Tag	LONG TAG (2.1.1.) (Page 99)
TAG	TAG (2.1.2.) (Page 99)
Descriptor	DESCRIPTOR (2.1.3.) (Page 99)
Message	MESSAGE (2.1.4.) (Page 99)
Date	
Range Mode	
Manufacturer	
Product Name	
Order Number	
Final Assembly Number	
Hardware Revision	
Firmware Revision	
Loader Revision	
EDD Revision	
Wizard	
Quick Start	
Step 1 of 4: Identification (tab)	
Long Tag	LONG TAG (2.1.1.) (Page 99)
TAG	TAG (2.1.2.) (Page 99)
Descriptor	DESCRIPTOR (2.1.3.) (Page 99)
Message	MESSAGE (2.1.4.) (Page 99)
Date	
Order Number	
Range Mode	
Language	
Step 2 of 4: Application (tab)	
Application Type	
Operation	
Step 3 of 4: Ranges (tab)	
Unit	
Low Calibration Point (X)	
High Calibration Point (Y)	
Response Rate	
Step 4 of 4: Summary (tab)	
Long Tag	

TAG
Descriptor
Message
Date
Order Number
Range Mode
Language
Application Type
Operating Mode
Unit
Low Calibration Point (X)
High Calibration Point (Y)
Response Rate
Configuration Flag Reset
Configuration Flag Reset (tab)

OPERATION
Operation
Operation (tab)
Long Tag
Select Analog Output
Master Reset MASTER RESET (4.2.) (Page 123)
Self Test
Loop Test

SENSOR
Sensor
Sensor (tab)
Long Tag
Unit
Operating Mode
Damping Filter
Low Calibration Point (X)
High Calibration Point (Y)
Sensor Offset
Response Rate
Fill Rate per Minute
Empty Rate per Minute
Material Level
Timer
Level
Analog Output Scaling
Analog Output Scaling (tab)

Long Tag
Current Output Function
Start of Scale (=4 mA)
Full Scale (=20 mA)
Control Range: Lower Limit
Control Range: Upper Limit

Signal Processing

General

General (tab)

Long Tag	
Near Range	NEAR RANGE (2.7.1.) (Page 108)
Far Range	FAR RANGE (2.7.2.) (Page 108)
Algorithm	ALGORITHM (2.7.3.1) (Page 109)
Position Detect	POSITION DETECT (2.7.3.3) (Page 109)
Echo Threshold	ECHO THRESHOLD (2.7.3.2) (Page 109)
CLEF Range	CLEF RANGE (2.7.3.4) (Page 110)
Echo Marker	ECHO MARKER (2.7.3.5) (Page 110)
Echo Lock	ECHO LOCK (2.7.4.1.) (Page 111)
Sampling Up	UP SAMPLING (2.7.4.2.) (Page 111)
Sampling Down	DOWN SAMPLING (2.7.4.3.) (Page 111)
Echo Lock Window	ECHO LOCK WINDOW (2.7.4.4.) (Page 111)
Confidence	CONFIDENCE (2.7.6.1) (Page 112)
Echo Strength	ECHO STRENGTH (2.7.6.2) (Page 112)
Narrow Echo Filter	NARROW ECHO FILTER (2.7.5.1.) (Page 112)
Reform Echo	REFORM ECHO (2.7.5.2.) (Page 112)

TVT

TVT Setup (tab)

Long Tag	
Auto False Echo Suppression	AUTO FALSE ECHO SUPPRESSION (2.8.1) (Page 113)
Auto False Echo Suppression Range	AUTO FALSE ECHO SUPPRESSION RANGE (2.8.2) (Page 113)
Hover Level	HOVER LEVEL (2.8.3) (Page 113)
Shaper Mode	SHAPER MODE (2.8.4) (Page 114)

TVT Shaper 1 (tab)

Long Tag
Breakpoints

TVT Shaper 2 (tab)

Long Tag
Breakpoints

TVT Shaper 3 (tab)

Long Tag	
Breakpoints	
Manual TVT Curve	
Manual TVT Diagram (tab)	
Long Tag	
Shaper Mode	
Echo Profile	
Echo Profile (tab)	
Long Tag	
Distance Measurement	
Confidence	CONFIDENCE (2.7.6.1) (Page 112)
Near Range	NEAR RANGE (2.7.1.) (Page 108)
Local Display	
Local Display (tab)	
Long Tag	
Language	LANGUAGE (7.) (Page 131)
LCD Contrast	LCD CONTRAST (4.6.) (Page 124)
LCD Backlight	LCD BACKLIGHT (4.5.) (Page 124)
MAINTENANCE AND DIAGNOSTICS	
Remaining Device Lifetime	
Device Lifetime (tab)	
Long Tag	
Lifetime (expected)	LIFETIME EXPECTED (3.6.6.) (Page 119)
Remaining Lifetime	REMAINING LIFETIME (3.6.2.) (Page 118)
Time in Operation	TIME IN OPERATION (3.6.1.) (Page 118)
Activation of Reminders	REMINDER ACTIVATION (3.6.5.) (Page 119)
Reminder 1 before Lifetime (required)	
Reminder 2 before Lifetime (demanded)	
Snooze for 1 year	
Remaining Sensor Lifetime	
Device Sensor (tab)	
Long Tag	
Lifetime (expected)	LIFETIME EXPECTED (3.7.6.) (Page 122)
Time in Operation	TIME IN OPERATION (3.7.1.) (Page 121)
Remaining Lifetime	REMAINING LIFETIME (3.7.2.) (Page 121)
Activation of Reminders	REMINDER ACTIVATION (3.7.5.) (Page 121)
Reminder 1 before Lifetime (required)	REMINDER 2 (DEMANDED) (3.7.4.) (Page 121)
Reminder 2 before Lifetime (demanded)	

Sensor Replaced	
Snooze for 1 year	
Service Schedule	
Service Schedule (tab)	
Long Tag	
Service Interval	SERVICE INTERVAL (4.7.6.) (Page 126)
Time Since Last Service	TIME SINCE LAST SERVICE (4.7.1.) (Page 125)
Time Until Next Service	TIME UNTIL NEXT SERVICE (4.7.2.) (Page 125)
Activation of Reminders	REMINDER ACTIVATION (4.7.5.) (Page 125)
Reminder 1 before Lifetime (required)	REMINDER 1 (REQUIRED) (4.7.3.) (Page 125)
Reminder 2 before Lifetime (demanded)	REMINDER 2 (DEMANDED) (4.7.4.) (Page 125)
Service Performed	
Calibration Schedule	
Calibration Schedule (tab)	
Long Tag	
Calibration Interval	
Time Since Last Calibration	
Activation of Reminders	
Reminder 1 before Lifetime (required)	
Reminder 2 before Lifetime (demanded)	
Calibration Performed	
Electronics Temperature	
Electronics Temperature	
Long Tag	
Electronics Temperature	
Lowest Value	
Highest Value	
Wear	
Wear (tab)	
Long Tag	
Time in Operation	
Poweron Resets	POWERON RESETS (4.4.) (Page 123)
COMMUNICATION	
Communication	
Communication (tab)	
Long Tag	

Manufacturer's ID
Device ID
Product ID
Device Revision
EDD Revision
Universal Command
SECURITY
Security
Security (tab)
Long Tag
Write Protection WRITE PROTECTION (6.1.) (Page 131)
Local Operation Enable
Device Diagnostics Function Group
DEVICE DIAGNOSTICS
Status
Device Status (tab)
Long Tag
Status Listing
HW/FW Status (tab)
Long Tag
Status Listing
Process Variables Function Group
PROCESS VARIABLES
Process Variables
Values (tab)
Long Tag
Primary Variable
Secondary Variable
Analog Output (tab)
Long Tag
Distance Range (%)
Analog Output (PV)=
Trend View (tab)
Long Tag
Primary Variable
Secondary Variable
Echo Profile
Echo Profile (tab)
Long Tag
Echo Profile/TVT Curve
Distance Measurement

Confidence
Near Range
Compare Function Group
COMPARE
Compare
Identification (tab)
TAG
Descriptor
Message
Date
Manufacturer
Product Name
Universal Command Revision
Device Revision
Device ID
Final Assembly Number
Hardware Revision
Software Revision
Distributor
Order Number
Setup (tab)
Long Tag
Status Listing

Parameter Reference 8

Note

- Parameter names and menu structure are almost identical for SIMATIC PDM and the local display interface (LDI).
- To enter Program mode using the device buttons, press ▶. Press ◀ to return to Measurement mode.
- **Mode** toggles between **PROGRAM** and **Measurement** Modes via the handheld programmer.
- For Quick Access to parameters via the handheld programmer, press **Home**, then enter the menu number, for example: **2.2.1.**
- In Navigation mode**, ARROW keys (**◀ ▲ ▼ ▶**)** navigate the menu in the direction of the arrow.
- Press **RIGHT arrow** ▶ to open **Edit** Mode, or to save a modification.

Parameters are identified by name and organized into function groups. See HMI menu (Page 179) for a chart. For AMS Device Manager the structure varies slightly.

Parameters accessible via the handheld programmer are followed by the device menu number in parenthesis. Parameters not followed by a number are accessible only via remote operation.

For more details see:

- Operating via Operating via SIMATIC PDM (Page 50)
- Operating via Operating via FDT (field device tool) (Page 67)

8.1 WIZARDS (1.)

8.1.1 QUICK START (1.)

Wizards provide step-by-step procedures to configure the device, filter out false echoes, and upload and download parameters and firmware to the optional display for easy configuration of multiple LR560s.

8.1.2 QUICK START WIZARD (1.1.)

The Quick Start wizard provides an easy step-by-step procedure to configure the device for a simple application.

From measurement screen, press RIGHT ▶ twice to open the Quick Start Wizard menu. Select a wizard, press RIGHT ▶ to open the first step, and follow the instructions.

Note

Do not use the Quick Start Wizard to modify individual parameters. Perform customization only after the Quick Start has been completed.

- See Quick Start Wizard via the local display push buttons (Page 38)
- See Quick Start Wizard via the handheld programmer (Page 45)
- See Quick Start Wizard via SIMATIC PDM (Page 52)

8.1.3 AFES WIZARD (1.2.)

Note

Incorrect device settings

Before using AFES, configure the device via the Quick Start wizard.

If you have a vessel with known obstructions, we recommend using AFES to prevent false echo detection.

This feature can also be used if SITRANS LR560 displays a false high level, or the reading is fluctuating between the correct level and a false high level.

Make sure the material level is below all known obstructions.

1. Navigate to Level Meter >DIAGNOSTICS (3.) (Page 115)> ECHO PROFILE (3.2.) (Page 116).
2. Press RIGHT ▶ to request a profile.
3. Determine a range that includes the false echo but not the true echo: in the example, 3.3 m.

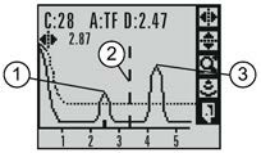

① false echo ② AFES range
③ true echo

4. Open the AFES wizard.
5. Press DOWN ▼ to continue and then RIGHT ▶ to edit Auto False Echo Suppression Range.

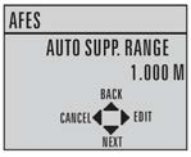

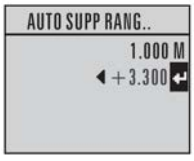

6. Enter the new range value and press RIGHT ▶ to transfer it. Press DOWN ▼ to initiate learn. A transition screen appears, followed by the message **Wizard Complete**.

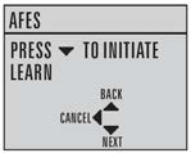

7. Press DOWN ▼ (Finish) to save AFES parameter changes and return to Program menu.
8. Press LEFT ◀ twice to return to Measurement mode.

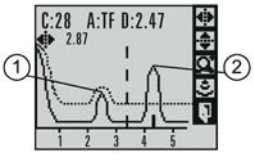

① false echo ② true echo

8.1.4 COPY PARAMETERS TO DISPLAY (1.3.)

Transfers parameter settings from a device to the local display interface.

See Connecting SITRANS LR560 (Page 30) for instructions on removing the local display interface.

1. Press RIGHT ▶ to edit.
2. Press DOWN ▼ to select Start and RIGHT ▶ to begin the transfer.

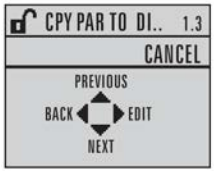

PARAM UPLOAD is displayed, then the device returns to Measurement mode.

8.1.5 COPY PARAMETERS FROM DISPLAY (1.4.)

Transfers parameter settings from the local display interface to a device.

1. Press RIGHT ▶ arrow to edit.
2. Press DOWN ▼ arrow to select Start and RIGHT ▶ arrow to begin the transfer.

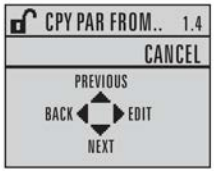

PARAM DOWNLOAD is displayed, then the device returns to Measurement mode.

8.1.6 COPY FIRMWARE TO DISPLAY (1.5.)

Transfers firmware from a device to the local display interface.

1. Press RIGHT ▶ to edit.
2. Press DOWN ▼ to select Start and RIGHT ▶ to begin the transfer.

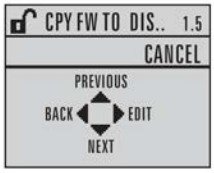

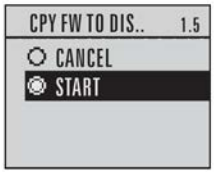

SW UPLOAD is displayed, then the device returns to Measurement mode.

8.1.7 COPY FIRMWARE FROM DISPLAY (1.6.)

Note

Incomplete transfer

Do not interrupt power supply during transfer.

Transfers firmware from the local display interface to a device.

1. Press RIGHT ▶ to edit.
2. Press DOWN ▼ to select Start and RIGHT ▶ to begin the transfer.

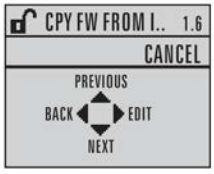

SW DOWNLOAD is displayed, then the device returns to Measurement mode.

8.2 SETUP (2.)

Note

Handheld programmer

Values shown in the following tables can be entered via handheld programmer.

8.2.1 DEVICE (2.1.)

8.2.1.1 LONG TAG (2.1.1.)

Text that can be used in any way. A recommended use is as a unique label for a field device in a plant. Limited to 32 ASCII characters. Read only on device, Read/Write using SIMATIC PDM and AMS.

8.2.1.2 TAG (2.1.2.)

Text that can be used in any way. A recommended use is as a unique label for a field device in a plant. Limited to 8 ASCII characters. Read only on device, Read/Write using SIMATIC PDM and AMS.

8.2.1.3 DESCRIPTOR (2.1.3.)

Text that can be used in any way. Limited to 16 ASCII characters. No specific recommended use. Read only on device, Read/Write using SIMATIC PDM and AMS.

8.2.1.4 MESSAGE (2.1.4.)

Text that can be used in any way. Limited to 32 ASCII characters. No specific recommended use. Read only on device, Read/Write using SIMATIC PDM and AMS.

8.2.1.5 INSTALLATION DATE (2.1.5.)

Date the device was first commissioned. Read only locally. Can be written via HART (dd mm yyyy).

8.2.1.6 HARDWARE REVISION (2.1.6.)

Read only. Corresponds to the electronics hardware of the device.

8.2.1.7 FIRMWARE REVISION (2.1.7.)

Read only. Corresponds to the firmware that is embedded in the device.

8.2.1.8 LOADER REVISION (2.1.8.)

Read only. Corresponds to the software used to update the device.

8.2.1.9 MENU TIMEOUT (2.1.9.)

Factory setting:	120 s
Setting range:	15 to 65535 s
Purpose:	Time menu stays visible before switching back to Measurement view if no key is pressed.

8.2.1.10 MANUFACTURE DATE (2.1.10.)

The date of manufacture of the device (dd mm yyyy).

8.2.2 SENSOR (2.2.)

8.2.2.1 UNITS (2.2.1.)

Factory setting:	m
Setting range:	m, cm, mm, ft, in, %
Purpose:	PV (Primary Value) and SV (Secondary Sensor measurement units). Used in setting High/Low Calibration Point, and displayed on LCD and in PDM.
Description:	Changing units to % will update the mA setpoints.

8.2.2.2 SENSOR MODE (2.2.2.)

Factory setting:	DISTANCE	
Setting range:	LEVEL, SPACE, DISTANCE	
Purpose:	Distance to material surface	
Description:	LEVEL	Low Calibration Point (process empty level)
	SPACE	High Calibration Point (process full level)
	DISTANCE	Sensor Reference Point

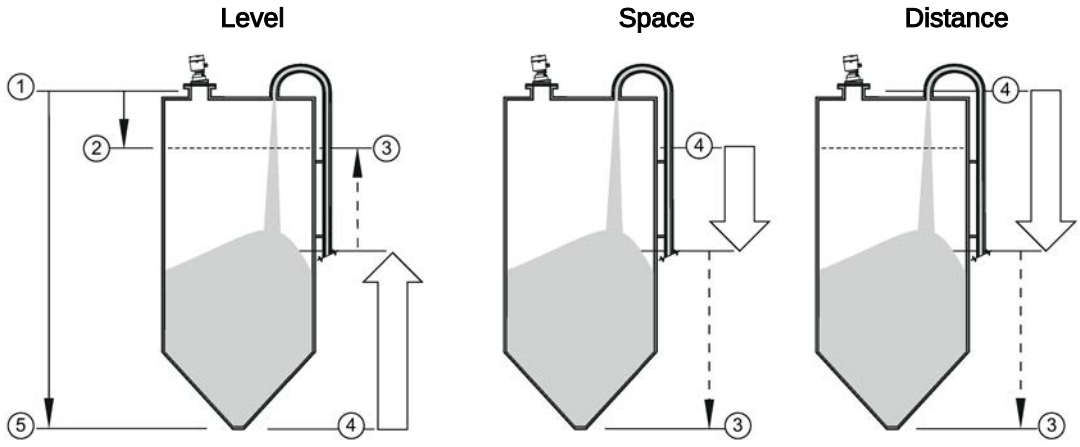

① sensor reference point
② high calibration point
③ 20 mA, 100%
④ 4 mA, 0%
⑤ low calibration point

8.2.2.3 DAMPING FILTER (2.2.3.)

Note

Response rate

For time constant values corresponding to response rate settings, please see RESPONSE RATE (2.4.1.) (Page 102).

Factory setting:	60 s
Setting range:	0 to 1500 s
Purpose:	The time constant for the damping filter. The damping filter smooths out the response to a sudden change in level. This is an exponential filter and the engineering unit is always in seconds (see Damping (Page 164) for more detail).

8.2.2.4 TEMPERATURE UNITS (2.2.4.)

Factory setting:	Degrees C
Setting range:	Degrees C, F, R, or K
Purpose:	Selects the engineering unit to be displayed with the value representing temperature.

8.2.2.5 UNIT (2.2.5.)

Factory setting:	m
Setting range:	m, cm, mm, ft, in, %
Purpose:	PV (Primary Value) and SV (Secondary Sensor measurement units). Used in setting High/Low Calibration Point, and displayed on LCD and in PDM.
Description:	Changing units to % will update the mA setpoints.

8.2.3 CALIBRATION (2.3.)

8.2.3.1 LOW CALIBRATION POINT (2.3.1.)

Factory setting:	40.000 m or 100.000 m
Setting range:	0.000 to 40.000 m or 0.000 to 100.000 m.
Purpose:	Distance from sensor reference point[1)] to Low Calibration Point. Units are defined in UNITS (2.2.1.) (Page 100) and displayed on the LCD and in PDM.
Description:	Any change to Low Calibration Point will cause the mA setpoints to be updated.
Related parameters:	FAR RANGE (2.7.2.) (Page 108) UNITS (2.2.1.) (Page 100)

[1)] The point from which level measurement is referenced.

8.2.3.2 HIGH CALIBRATION POINT (2.3.2.)

Factory setting:	0.000 m
Setting range:	0.000 to 40.000 m or 0.000 to 100.000 m.
Purpose:	Distance from sensor reference point[1)] to High Calibration Point. Units are defined in UNITS (2.2.1.) (Page 100)

Description:	When setting the High Calibration Point value, note that echoes are ignored within NEAR RANGE (2.7.1.) (Page 108). Any change to High Calibration Point will cause the mA setpoints to be updated.
Related parameters:	UNITS (2.2.1.) (Page 100) FAR RANGE (2.7.2.) (Page 108)

[1)] The point from which level measurement is referenced.

8.2.3.3 SENSOR OFFSET (2.3.3.)

Factory setting:	0.00 m
Setting range:	-100 to 100 m
Purpose:	A constant offset that can be added to or subtracted from the sensor value[1)] to compensate for a shifted sensor reference point. For example, when adding a thicker gasket or reducing the standoff/nozzle height. The units are defined in UNITS (2.2.1.) (Page 100).

[1)] The value produced by the echo processing which represents the distance from sensor reference point to the target.

8.2.4 RATE (2.4.)

8.2.4.1 RESPONSE RATE (2.4.1.)

Changing Response Rate resets

FILL RATE/MIN (2.4.2.) (Page 103)
EMPTY RATE/MIN (2.4.3.) (Page 103)
DAMPING FILTER (2.2.3.) (Page 101)

Factory setting:	Medium			
Setting range:	Response rate	FILL RATE/MIN (2.4.2.) (Page 103)/EMPTY RATE/MIN (2.4.3.) (Page 103)	DAMPING FILTER (2.2.3.) (Page 101)	AVERAGE AMOUNT (2.7.5.3.) (Page 112)
	Slow	0.1 m/min (0.32 ft/min)	600 s	0.9
	Medium	1.0 m/min (3.28 ft/min)	60 s	0.75
	Fast	10.0 m/min (32.8 ft/min)	0 s	0.75[a)]
Purpose:	Sets the reaction speed of the device to measurement changes.			
Description:	Use a setting just faster than the maximum filling or emptying rate (whichever is faster).			
Related parameters:	FILL RATE/MIN (2.4.2.) (Page 103) EMPTY RATE/MIN (2.4.3.) (Page 103) DAMPING FILTER (2.2.3.) (Page 101) AVERAGE AMOUNT (2.7.5.3.) (Page 112)			

[a)] It may be necessary to reduce this further for FAST applications.

- Use a setting just faster than the maximum filling or emptying rate (whichever is faster).
- For the measurement value update time, see "Update time" in Performance (Page 144).

8.2.4.2 FILL RATE/MIN (2.4.2.)

Factory setting:	Medium	
Setting range:	0 to 999 999 m / min.(when using AMS, max. value is 99 999 m/min.)	
	RESPONSE RATE (2.4.1.) (Page 102)	Fill rate/min
	Slow	0.1 m/min (0.32 ft/min)
	Medium	1.0 m/min (3.28 ft/min)
	Fast	10.0 m/min (32.8 ft/min)
Purpose:	Defines the maximum rate at which the reported sensor value[1)] is allowed to increase. Allows you to adjust the SITRANS LR560 response to increases in the actual material level. Fill Rate is automatically updated whenever Response Rate is altered.	
Description:	Enter a value slightly greater than the maximum vessel-filling rate, in units per minute.	
Altered by:	RESPONSE RATE (2.4.1.) (Page 102)	
Related parameters:	UNITS (2.2.1.) (Page 100)	

1) Sensor value is the value produced by the echo processing which represents the distance from sensor reference point to the target.

Note

The selected rate will also impact the AVERAGE AMOUNT (2.7.5.3.) (Page 112) parameter. For example, a SLOW setting will change it to 0.9, and a FAST setting may require it to be reduced to a very low value.

8.2.4.3 EMPTY RATE/MIN (2.4.3.)

Factory setting:	Medium	
Setting range:	Slow	0.1 m/min (0.32 ft/min)
	Medium	1.0 m/min (3.28 ft/min)
	Fast	10.0 m/min (32.8 ft/min)
Purpose:	Defines the maximum rate at which the reported sensor value[1)] is allowed to decrease. Adjusts the SITRANS LR560 response to decreases in the actual material level. Empty Rate is automatically updated whenever RESPONSE RATE (2.4.1.) (Page 102) is altered.	
Description:	Enter a value slightly greater than the vessel's maximum emptying rate, in units per minute.	
Altered by:	RESPONSE RATE (2.4.1.) (Page 102)	
Related parameters:	UNITS (2.2.1.) (Page 100)	

1) Sensor value is the value produced by the echo processing which represents the distance from sensor reference point to the target. See Sensor Mode (2.2.2.).

Note

The selected rate will also impact the AVERAGE AMOUNT (2.7.5.3.) (Page 112) parameter. For example, a SLOW setting will change it to 0.9, and a FAST setting may require it to be reduced to a very low value.

8.2.5 FAIL-SAFE (2.5.)

Note

Default settings

The default setting depends whether your device is a standard or NAMUR NE 43-compliant device. An NE43 device part number ends with -Z NO7.

8.2.5.1 MATERIAL LEVEL (2.5.1.)

Factory setting:	**Standard:** HOLD; **NAMUR NE 43:** VALUE	
Setting range:	HI	20.5 mA (max. mA Limit)
	LO	3.8 mA (min. mA Limit)
	HOLD	Last valid reading
	VALUE	User-selected value defined in LEVEL (2.5.3.) (Page 104): default 3.56 mA
Purpose:	Defines the mA output to use when the Fail-safe timer expires.	
Related parameters:	LEVEL (2.5.3.) (Page 104)	

8.2.5.2 TIMER (2.5.2.)

Note

When a loss of echo occurs, MATERIAL LEVEL (2.5.1.) (Page 104) determines the material level to be reported when the fail-safe timer expires.

Factory setting:	100 s
Setting range:	0.00 to 7200 seconds
Purpose:	Sets the reaction speed of the device to measurement changes.

8.2.5.3 LEVEL (2.5.3.)

Note

MATERIAL LEVEL (2.5.1.) (Page 104) must be set to **VALUE** to enable the Level Value to be reported.

Factory setting:	3.56 mA
Setting range:	3.56 to 22.6 mA
Purpose:	Allows the user to define the mA value to be reported when the Fail-safe timer expires.

8.2.6 ANALOG OUTPUT SCALING (2.6.)

8.2.6.1 CURRENT OUTPUT FUNCTION (2.6.1.)

Note

- **Level**, **space**, and **distance**, have different reference points.
- Use caution when changing Current Output Function while the device is connected to a HART network. Current Output Function controls the primary value and the loop current for the device.
- Current Output Function also affects the secondary, tertiary and quaternary variables in a HART network.

Factory setting:	Distance		
Setting range:		**Reference point**	**Description**
	Level	Low Calibration Point	measured as a percentage of the difference between High Calibration Point and Low Calibration Point
	Space	High Calibration Point	
	Distance	sensor reference point	measured as a percentage of Low Calibration Point
Purpose:	Can be set to either **Level, Space, or Distance.**		
Description:	To view the mA reading in the secondary region of the LCD, press 5 on the handheld programmer. To modify Current Output Function via SIMATIC PDM: • Open the menu **Device** – **Select Analog Output**, see Select Analog Output via SIMATIC PDM.		
Related parameters:	UNITS (2.2.1.) (Page 100) 4 mA SETPOINT (2.6.2.) (Page 106) 20 mA SETPOINT (2.6.3.) (Page 106) LOW CALIBRATION POINT (2.3.1.) (Page 101) HIGH CALIBRATION POINT (2.3.2.) (Page 101)		

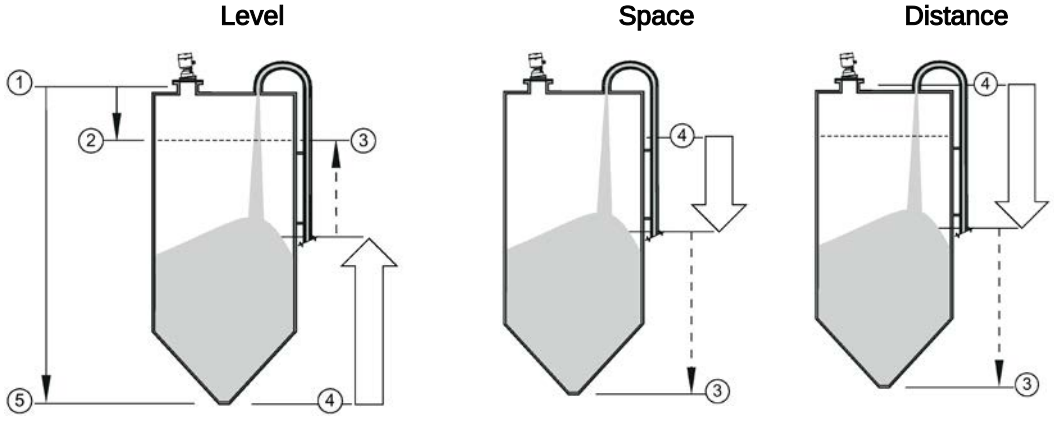

① sensor reference point
② high calibration point
③ 20 mA, 100%
④ 4 mA, 0%
⑤ low calibration point

8.2.6.2 4 mA SETPOINT (2.6.2.)

Factory setting:	0.00 m
Setting range:	–999999 to +999999 (limits vary with current function and units)
Purpose:	Sets the process level corresponding to the 4 mA value. 4 mA always defaults to **0**, and CURRENT OUTPUT FUNCTION (2.6.1.) (Page 105) determines whether this is a Level, Space, or Distance measurement.
Description:	• Enter the reading that is to correspond to a 4 mA output. • Units are defined in Units (2.2.1.) (Page 100) for Level, Space, or Distance.
Related parameters:	UNITS (2.2.1.) (Page 100) LOW CALIBRATION POINT (2.3.1.) (Page 101) HIGH CALIBRATION POINT (2.3.2.) (Page 101)

8.2.6.3 20 mA SETPOINT (2.6.3.)

Factory setting:	40.00 m or 100.0 m (set to value corresponding to 100% as defined by Current Output Function)
Setting range:	–999999 to +999999 (limits vary with current function and units)
Purpose:	Sets the process level corresponding to the 20 mA value. 20 mA always defaults to 100%, and Current Output Function determines whether this is a Level, Space, or Distance measurement, see CURRENT OUTPUT FUNCTION (2.6.1.) (Page 105)
Description:	• Enter the reading that is to correspond to a 20 mA output. • Units are defined in UNITS (2.2.1.) (Page 100) for Level, Space, or Distance.
Related parameters:	UNITS (2.2.1.) (Page 100) LOW CALIBRATION POINT (2.3.1.) (Page 101) HIGH CALIBRATION POINT (2.3.2.) (Page 101) CURRENT OUTPUT FUNCTION (2.6.1.) (Page 105)

8.2.6.4 MIN. mA LIMIT (2.6.4.)

Factory setting:	3.8 mA
Setting range:	3.56 to 22.6 mA
Purpose:	Prevents the mA output from dropping below this minimum level for a measurement value. This does not restrict the Fail-safe or Manual settings.

8.2.6.5 MAX. mA LIMIT (2.6.5.)

Factory setting:	20.50 mA
Setting range:	3.56 to 22.6 mA
Purpose:	Prevents the mA output from rising above this maximum level for a measurement value. This does not restrict the Fail-safe or Manual settings.

8.2.6.6 mA OUTPUT MODE (2.6.6.)

Note

Multidrop mode

To complete the two step process of putting the device in multidrop mode, see DEVICE ADDRESS (5.1.) (Page 130)

Factory setting:	Auto	
Setting range:	Manual	User can enter mA value for loop current.
	Auto	Loop current will follow measurement value.
	Fixed[1)]	Read only. Loop current is set to the multidrop level of 4 mA
Purpose:	Can be set to Manual, or Auto.	
Related parameters:	DEVICE ADDRESS (5.1.) (Page 130)	

1) Fixed mode can be selected or cancelled only via HART command 6. It cannot be changed using PDM, AMS, or the HART 375 Communicator.

8.2.6.7 MANUAL VALUE (2.6.7.)

Setting range:	3.56 to 22.6 mA
Purpose:	Allows you to use a simulated value to test the functioning of the loop. You can enter 4 mA, 20 mA, or any other user-defined value within the range.
Description:	• First set mA OUTPUT MODE (2.6.6.) (Page 107) to Manual. • Enter the desired mA value in mA Output Value. • After completing the test, remember to reset mA Output mode (2.6.6.) to the previous setting. **Via SIMATIC PDM:** • Open the menu **Device** > **Loop Test.**
Related parameters:	mA OUTPUT MODE (2.6.6.) (Page 107)

8.2.6.8 mA OUTPUT VALUE (2.6.8.)

Setting range:	Read only, 3.56 to 22.6 mA
Purpose:	Allows you to view the simulated value entered to test the functioning of the loop.
Related parameters:	MANUAL VALUE (2.6.7.) (Page 107)

8.2.7 SIGNAL PROCESSING (2.7.)

8.2.7.1 NEAR RANGE (2.7.1.)

Factory setting:	0.278 m (0.91 ft)
Setting range:	0 to 45 m (0 to 131.2 ft) for 40 m device 0 to 105 m (0 to 344.5 ft) for 100 m device
Purpose:	The range in front of the device (measured from the sensor reference point) within which any echoes will be ignored. This is sometimes referred to as blanking or a dead zone.
Related parameters:	UNITS (2.2.1.) (Page 100)

8.2.7.2 FAR RANGE (2.7.2.)

Note

Far Range can extend beyond the bottom of the vessel.

Factory setting:	Value for Low Calibration Pt. + 5 m (16.4 ft)
Setting range:	Min. = Low Cal. Pt. Max. = 40 m device: 45 m (131.2 ft), 100 m device: 105 m (344.5 ft)
Purpose:	Allows the material level to drop below Low Calibration Point without generating a Loss of Echo (LOE) state, see SENSOR MODE (2.2.2.) (Page 100).
Description:	Use this feature if the measured surface can drop below the Low Cal. Point in normal operation.
Related parameters:	UNITS (2.2.1.) (Page 100) CLEF RANGE (2.7.3.4) (Page 110)

8.2.7.3 ECHO SELECT (2.7.3.)

ALGORITHM (2.7.3.1)

Factory setting:	F: First Echo	
Setting range:	ALF	Area Largest First
	A	Echo Area
	L	Largest Echo
	F	First Echo
	AL	Echo Area Largest
	AF	Echo Area First
	LF	Echo Largest First
	BLF	Best of First and Largest echo
	BL	Best Largest Echo
	BF	Best First Echo
	LAST	Last
	TF	True First Echo
Purpose:	Selects the algorithm to be applied to the echo profile to extract the true echo.	

ECHO THRESHOLD (2.7.3.2)

Factory setting:	5
Setting range:	0 to 99
Purpose:	Sets the minimum echo confidence that the echo must meet in order to prevent a Loss of Echo condition and the expiration of the Fail-safe (LOE) timer. When CONFIDENCE (2.7.6.1) (Page 112) exceeds **Echo Threshold**, the echo is accepted as a valid echo and is evaluated.
Description:	Use this feature when an incorrect material level is reported.
Related parameters:	TIMER (2.5.2.) (Page 104)

POSITION DETECT (2.7.3.3)

Note

Vessel type

Selecting Steel or Concrete vessel type in the Quick Start wizard changes the setting for **Position Detect** to Rising Edge.

Factory setting:	RISING
Setting range:	RISING (yields highest stability on sloped targets)
	CENTER (yields higher accuracy on flat, non-sloped targets)
	HYBRID (CENTER and CLEF)
	CLEF (Constrained Leading Edge Fit)
Purpose:	Defines where on the echo the distance measurement is determined.
Description:	If the vessel bottom is being reported as the level instead of the actual material level (at low conditions), we recommend setting Position to Hybrid and using it in combination with CLEF Range.
Related parameters:	CLEF RANGE (2.7.3.4) (Page 110)

CLEF RANGE (2.7.3.4)

Note

CLEF range

- CLEF Range is referenced from Far Range.
- The value for CLEF Range must include the difference between Far Range and Low Calibration Point, plus any level above the Low Calibration Point to be managed by the CLEF algorithm.

Factory setting:	0.00 m
Setting range:	40 m device: 0 to 45 m 100 m device: 1 to 105 m
Purpose:	The CLEF algorithm is used mainly to allow correct level reporting for low dK materials which may otherwise cause an incorrect reading in an empty or almost empty vessel. It is used from Far Range up to the level defined by CLEF Range (see illustration below). Above that point, the Center algorithm is used.
Related parameters:	POSITION DETECT (2.7.3.3) (Page 109) FAR RANGE (2.7.2.) (Page 108)

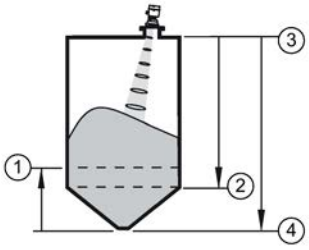

① CLEF Range ② Low calibration point
③ Sensor reference point ④ Far range

ECHO MARKER (2.7.3.5)

Factory setting:	70%
Setting range:	5 to 95%
Purpose:	The point on the selected echo from which the measured value is taken.
Description:	Use this feature if the reported material level fluctuates slightly due to a variable rise in the leading edge of the true echo on the Echo Profile. Enter the value (in percent of echo height) to ensure the Echo Lock window intersects the Echo Profile at the sharpest rising portion of the Echo Profile representing the true echo. This value is preset to 70%.

8.2.7.4 SAMPLING (2.7.4.)

Provides a method of checking the reliability of a new echo before accepting it as the valid reading, based on numbers of samples above or below the currently selected echo.

8.2.7.5 ECHO LOCK (2.7.4.1.)

Factory setting:	Material Agitator
Setting range:	Lock Off
	Maximum Verification (not recommended for radar)
	Material Agitator
	Total Lock (not recommended for radar)
Purpose:	Selects the measurement verification process.
Related parameters:	FILL RATE/MIN (2.4.2.) (Page 103) EMPTY RATE/MIN (2.4.3.) (Page 103) UP SAMPLING (2.7.4.2.) (Page 111) DOWN SAMPLING (2.7.4.3.) (Page 111)

8.2.7.6 UP SAMPLING (2.7.4.2.)

Factory setting:	5
Setting range:	1 to 50
Purpose:	Specifies the number of consecutive echoes that must appear above the echo currently selected, before the measurement is accepted as valid.

8.2.7.7 DOWN SAMPLING (2.7.4.3.)

Factory setting:	2
Setting range:	1 to 50
Purpose:	Specifies the number of consecutive echoes that must appear below the echo currently selected, before the measurement is accepted as valid.

8.2.7.8 ECHO LOCK WINDOW (2.7.4.4.)

Factory setting:	0 m
Setting range:	40 m device: 0 to 45 m, 100 m device: 0 to 105 m
Purpose:	A “distance window” centered on the echo is used to derive the reading. When a new measurement is in the window, the window is re-centered and the reading is calculated.
Description:	When the value is 0, the window is automatically calculated after each measurement. • For slower Measurement Response values, the window grows at a slower rate. • For faster Measurement Response values, the window grows at a faster rate.

Note

Values in Echo Lock window

The Echo Lock window is stored as a standard sample, but displayed in sensor units. Any value entered for the Echo Lock window will be rounded to the nearest sample.

8.2.7.9 FILTERING (2.7.5.)

NARROW ECHO FILTER (2.7.5.1.)

Factory setting:	0 = OFF
Setting range:	0 to 255, greater = wider
Purpose:	Filters out echoes of a specific width.
Description:	To remove a false echo from the Echo Profile, take its width in mm and multiply it by 0.006. Enter the result. **Example**: to filter out a spike with 500 mm width, enter 6 or 7 (the closest integer product of 500 x 0.006). When a value is keyed in, the nearest acceptable value is entered.

REFORM ECHO (2.7.5.2.)

Factory setting:	0 = OFF
Setting range:	0 to 255 samples, greater = wider (recommended: 10 samples)
Purpose:	Smooths jagged peaks in the echo profile. Reforms fragmented echoes into one echo.

AVERAGE AMOUNT (2.7.5.3.)

Factory setting:	0.75
Setting range:	0.0 to 0.99
Purpose:	The fraction of the old shot data that is kept for averaging purposes. A higher value will give a smoother profile at the expense of a slower echo profile response.

8.2.7.10 ECHO QUALITY (2.7.6.)

CONFIDENCE (2.7.6.1)

Setting range (view only):	0 to 99	
	----	Shot not used
Purpose:	Indicates echo reliability: higher values represent better echo quality. The display shows the echo confidence of the last measurement. ECHO THRESHOLD (2.7.3.2) (Page 109) defines the minimum criterion for echo confidence.	

ECHO STRENGTH (2.7.6.2)

Setting range (view only):	–20 to 99
Purpose:	Displays the absolute strength (in dB above 1 µV rms) of the echo selected as the measurement echo.

8.2.8 TVT SETUP (2.8.)

8.2.8.1 AUTO FALSE ECHO SUPPRESSION (2.8.1)

Note

AFES wizard

We recommend setting Auto False Echo Suppression either via SIMATIC PDM or via local operation using the Auto False Echo Suppression wizard.

Used together with SHAPER MODE (2.8.4) (Page 114) to screen out false echoes in a vessel with known obstructions. A 'learned TVT' (time varying threshold) replaces the default TVT over a specified range.

- See Auto False Echo Suppression under SHAPER MODE (2.8.4) (Page 114) for a more detailed explanation.
- To set via SIMATIC PDM, see Auto false echo suppression (Page 60)
- To set via local operation, see AFES WIZARD (1.2.) (Page 95)

8.2.8.2 AUTO FALSE ECHO SUPPRESSION RANGE (2.8.2)

Factory setting:	1.00 m
Setting range:	0.00 to 45.00 m (or 105.00 m depending on model)
Purpose:	Defines the endpoint of the Learned TVT distance. Units are defined in UNITS (2.2.1.) (Page 100).
Description:	Used in combination with AUTO FALSE ECHO SUPPRESSION (2.8.1) (Page 113).

8.2.8.3 HOVER LEVEL (2.8.3)

Note

Changes take effect only at the next measurement.

Factory setting:	40%
Setting range:	0 to 100%
Purpose:	Defines how high the TVT (Time Varying Threshold) is placed above the noise floor of the echo profile, as a percentage of the difference between the peak of the largest echo in the profile and the noise floor.
Description:	When the device is located in the center of the vessel, the TVT hover level may be lowered to increase the confidence level of the largest echo.

8.2.8.4 SHAPER MODE (2.8.4)

Factory setting:	OFF
Setting range:	ON, OFF
Purpose:	Enables/disables the TVT shaper.

8.2.9 TVT SHAPER (2.9.)

Note

- SHAPER MODE (2.8.4) (Page 114) must be turned ON in order for TVT shaper points to be transferred
- We recommend using SIMATIC PDM to access this feature

Factory setting:	0 dB	
Setting range:	–50 to 50 dB	
Purpose:	Adjusts the TVT (Time Varying Threshold) at a specified range (breakpoint on the TVT). This allows you to reshape the TVT to avoid unwanted echoes. There are 120 breakpoints.	
Description:	To use TVT shaper via SIMATIC PDM: 1. Go to **Level Meter** > **Setup** > **Signal Processing** > **TVT setup** > **Shaper Mode** and select **On**. 2. Open the menu **Device** – **Echo Profile Utilities** and click on **TVT Shaper**. To use TVT shaper via LDI (local display interface): 1. Go to SHAPER MODE (2.8.4) (Page 114) and select **On**. 2. Go to Breakpoint 1-9. 3. Open Shaper 1 and enter the TVT Offset value (between –50 and 50). 4. Go to the next Shaper point and repeat steps c) and d) until all desired breakpoint values have been entered.	
Breakpoint parameter references:	**Parameter 2.9.1.**	Breakpoint 1-9
	Parameter 2.9.2.	Breakpoint 10-18
	Parameter 2.9.3.	Breakpoint 19-27
	Parameter 2.9.4.	Breakpoint 28-36
	Parameter 2.9.5.	Breakpoint 37-45
	Parameter 2.9.6.	Breakpoint 46-54
	Parameter 2.9.7.	Breakpoint 55-63
	Parameter 2.9.8.	Breakpoint 64-72
	Parameter 2.9.9.	Breakpoint 73-81
	Parameter 2.9.10.	Breakpoint 82-90
	Parameter 2.9.11.	Breakpoint 91-99
	Parameter 2.9.12.	Breakpoint 100-108
	Parameter 2.9.13.	Breakpoint 109-117
	Parameter 2.9.14.	Breakpoint 118-120

8.2.10 MEASURED VALUES (2.10.)

Purpose:	Read only. Allows you to view measured values for diagnostic purposes.	
Description:	To access measured values via **SIMATIC PDM**: • Open the menu **View** – **Process Variables**.	
Process variables:	MAIN OUTPUT (2.10.1.) (Page 115)	The value for Level/Volume, always displayed here in percent.
	OUTPUT NO LINEARIZATION (2.10.2.) (Page 115)	The value for Level, always displayed here in percent.
	OUTPUT NO OFFSETS (2.10.3.) (Page 115)	The value for distance, displayed in sensor units.

8.2.11 MAIN OUTPUT (2.10.1.)

The value for level/volume, always displayed here in percent.

8.2.12 OUTPUT NO LINEARIZATION (2.10.2.)

The value for level, always displayed here in percent.

8.2.13 OUTPUT NO OFFSETS (2.10.3.)

The value for distance, displayed in sensor units.

8.3 DIAGNOSTICS (3.)

8.3.1 FAULT RESET (3.1.)

Purpose:	Clears the following fault (**Acknowledge Fault**).	
Description:	Clearing a fault in one parameter of a "maintenance pair" automatically clears a fault in the second parameter of the pair. For example, entering S3 or S4 will clear a fault on Device (Maintenance Required), and on Device (Maintenance Demanded). This applies when clearing faults via the handheld programmer or 375 Field Communicator.	
	To clear a fault using the handheld programmer, enter the fault code number then press **RIGHT** arrow.	
	Internal Temperature High	
	To clear a fault via SIMATIC PDM: 1. Open the menu **Diagnostics** – **Device Diagnostics** and click on **Maintenance** tab. 2. Click on **Acknowledge Warnings** in the applicable box to clear the fault.	
Faults:	Device Lifetime Reminder 1	Maintenance Required
	Device Lifetime Reminder 2	Maintenance Demanded
	Sensor Lifetime Reminder 1	Maintenance Required
	Sensor Lifetime Reminder 2	Maintenance Demanded
	Service Schedule Reminder 1	Maintenance Required
	Service Schedule Reminder 2	Maintenance Demanded
	Calibration Schedule Reminder 1	Maintenance Required
	Calibration Schedule Reminder 2	Maintenance Demanded
	Internal Error	Maintenance Demanded

8.3.2 ECHO PROFILE (3.2.)

Purpose:	Allows you to request the current echo profile either locally via the handheld programmer, or remotely via SIMATIC PDM, or AMS Device Manager, see Process Intelligence (Page 157)
Description:	To acknowledge a reminder via SIMATIC PDM: 1. Open the menu **Device** – **Echo Profile Utilities.** To acknowledge a reminder via the handheld programmer: 1. In **PROGRAM** mode, navigate to **LEVEL METER** > **DIAGNOSTICS (3)** > **ECHO PROFILE (3.2)** 2. Press **RIGHT** arrow to request a profile, see Requesting an Echo Profile (Page 48)

8.3.3 TREND (3.3.)

Shows current trend. Samples are saved every minute up to 3200 samples. Once the maximum number is reached, saved data is overwritten from the beginning.

8.3.4 PEAK VALUES (3.4.)

Description:	To view via **SIMATIC PDM**: • Open the menu **View** – **Status**, and click on the tab **Device Status**, see also UNITS (2.2.1.) (Page 100).	
Peak value parameter references:	**Parameter 3.4.1. Min. Measured Value**	The minimum recorded Sensor value, reported in units defined in UNITS (2.2.1.) (Page 100).
	Parameter 3.4.2. Max. Measured Value	The maximum recorded Sensor value, reported in units defined in UNITS (2.2.1.) (Page 100).
	Parameter 3.4.3. Minimum PV	The minimum recorded Primary Value from the Analog Input Function Block 1.
	Parameter 3.4.4. Maximum PV	The maximum recorded Primary Value from the Analog Input Function Block 1.
	Parameter 3.4.5. Minimum SV	The minimum recorded Secondary Value from the Analog Input Function Block 1.
	Parameter 3.4.6. Maximum SV	The maximum recorded Secondary Value from the Analog Input Function Block 1.

8.3.5 MINIMUM MEASURED VALUE (3.4.1.)

The minimum recorded Sensor value, reported in units defined in UNITS (2.2.1.) (Page 100).

8.3.6 MAXIMUM MEASURED VALUE (3.4.2.)

The maximum recorded Sensor value, reported in units defined in UNITS (2.2.1.) (Page 100).

8.3.7 MINIMUM PRIMARY VALUE (3.4.3.)

The minimum recorded Primary Value from the Analog Input Function Block 1.

8.3.8 MAXIMUM PRIMARY VALUE (3.4.4.)

The maximum recorded Primary Value from the Analog Input Function Block 1.

8.3.9 MINIMUM SECONDARY VALUE (3.4.5.)

The minimum recorded Secondary Value from the Analog Input Function Block 1.

8.3.10 MAXIMUM SECONDARY VALUE (3.4.6.)

The maximum recorded Secondary Value from the Analog Input Function Block 1.

8.3.11 ELECTRONIC TEMPERATURE (3.5.)

8.3.11.1 MINIMUM VALUE (3.5.1)

Note

Read/write

Read only in PDM or AMS. Can be written via the handheld programmer.

Displays (in °C) the minimum temperature recorded by the internal electronics. The high and low values are maintained over a power cycle.

Via SIMATIC PDM navigate to **Maintenance and Diagnostics** > **Electronics Temperature**.

8.3.11.2 MAXIMUM VALUE (3.5.2)

Note

Read/write

Read only in PDM or AMS. Can be written via the handheld programmer.

Displays (in °C) the maximum temperature recorded by the internal electronics. The high and low values are maintained over a power cycle.

Via SIMATIC PDM navigate to **Maintenance and Diagnostics** > **Electronics Temperature**.

8.3.11.3 INTERNAL TEMPERATURE (3.5.3)

Read only. Displays (in °C) the current temperature on the circuit board recorded by the internal electronics.

For access via SIMATIC PDM open the menu **View** – **Process Variables** and check the field **Electronics Temperature**.

8.3.12 REMAINING DEVICE LIFETIME (3.6)

Note

- Four sets of parameters allow you to monitor the Device/Sensor Lifetimes and set up Maintenance/Service schedules, based on operating hours instead of a calendar-based schedule, see REMAINING SENSOR LIFETIME (3.7.) (Page 120), SERVICE SCHEDULE (4.7.) (Page 124), and CALIBRATION SCHEDULE (4.8.) (Page 127).
- Performing a reset to Factory Defaults will reset all the Maintenance Schedule parameters to their factory defaults.
- The device operates in years. To view Remaining Device Lifetime parameters in hours or days (via SIMATIC PDM only) see LIFETIME EXPECTED (3.6.6.) (Page 119).

Factory setting:	years
Setting range[1]:	hours, days, years
Purpose:	The device tracks itself based on operating hours and monitors its predicted lifetime. You can modify the expected device lifetime, set up schedules for maintenance reminders, and acknowledge them.
Description:	The maintenance warnings and reminders are available through HART communications. This information can be integrated into an Asset Management system. For optimal use, we recommend that you use SIMATIC PCS7 Asset Management Software in conjunction with SIMATIC PDM. To access these parameters via SIMATIC PDM: 1. Open the menu **Device** – **Maintenance** and select the **Remaining Device Lifetime** tab. 2. After modifying values/units as required, click on **Write** to accept the change, and **Read** to view the effect of the change. 3. Click on **Snooze** to add a year to the **Total Expected Device Life**.

[1] Selectable only via SIMATIC PDM.

8.3.12.1 TIME IN OPERATION (3.6.1.)

Read only. The amount of time the device has been operating.

8.3.12.2 REMAINING LIFETIME (3.6.2.)

Read only. LIFETIME EXPECTED (3.6.6.) (Page 119) less TIME IN OPERATION (3.6.1.) (Page 118).

8.3.12.3 REMIND. 1 (REQUIRED) (3.6.3.)

Factory setting:	0.164 years
Setting range:	0 to 20 years
Purpose:	If REMAINING LIFETIME (3.6.2.) (Page 118) is equal to or less than this value, the device generates a Maintenance Required reminder.
Description:	1) Modify values as required. 2) Set REMINDER ACTIVATION (3.6.5.) (Page 119).

8.3.12.4 REMIND. 2 (DEMANDED) (3.6.4.)

Factory setting:	0.019 years
Setting range:	0 to 20 years
Purpose:	If REMAINING LIFETIME (3.6.2.) (Page 118) is equal to or less than this value, the device generates a Maintenance Demanded reminder.
Description:	1) Modify values as required. 2) Set REMINDER ACTIVATION (3.6.5.) (Page 119).

8.3.12.5 REMINDER ACTIVATION (3.6.5.)

Factory setting:	OFF
Setting range:	Reminder 1 (Maintenance Required), Reminder 2 (Maintenance Demanded), Reminders 1 and 2, OFF
Purpose:	Allows you to enable a maintenance reminder.
Description:	To modify this parameter via SIMATIC PDM: • Go to menu **Device** – **Maintenance**.

8.3.12.6 LIFETIME EXPECTED (3.6.6.)

Note

The device always operates in years. Changing the units affects only the parameter view of the Remaining Device Lifetime parameters in SIMATIC PDM.

Factory setting:	10.00 years
Setting range:	0 to 20 years
Purpose:	Allows you to override the factory default.
Description:	Units: hours, days, years, are selectable only via SIMATIC PDM.

8.3.12.7 MAINTENANCE STATUS (3.6.7.)

Indicates which level of maintenance reminder is active.

In SIMATIC PDM, open the menu **Diagnostics** > **Device Diagnostics**, click on the Maintenance tab, and check the Calibration Schedule Status window.

8.3.12.8 ACKNOWLEDGE STATUS (3.6.8.)

Indicates which level of maintenance reminder has been acknowledged.

In SIMATIC PDM, open the menu **Diagnostics** > **Device Diagnostics**, click on the Maintenance tab, and check the Calibration Schedule Status window.

8.3.12.9 ACKNOWLEDGE (3.6.9.)

Purpose:	Acknowledges the current maintenance reminder.
Description:	To acknowledge a reminder via SIMATIC PDM: • Open the menu **Diagnostics** > **Device Diagnostics** and click on the tab Maintenance. • In the Calibration Schedule section, click on Acknowledge Warnings. To acknowledge a reminder via the local control buttons or hand-held programmer: • Press **RIGHT** arrow twice to open parameter view and activate Edit Mode. • Press **RIGHT** arrow to acknowledge the reminder.

8.3.13 REMAINING SENSOR LIFETIME (3.7.)

Note

- Four sets of parameters allow you to monitor the Device/Sensor Lifetimes and set up Maintenance/Service schedules, based on operating hours instead of a calendar-based schedule, see REMAINING DEVICE LIFETIME (3.6) (Page 118), SERVICE SCHEDULE (4.7.) (Page 124), and CALIBRATION SCHEDULE (4.8.) (Page 127).
- Performing a reset to Factory Defaults will reset all the Maintenance Schedule parameters to their factory defaults.
- The device operates in years. To view Remaining Device Lifetime parameters in hours or days (via SIMATIC PDM only) see LIFETIME EXPECTED (3.7.6.) (Page 122).

Factory setting:	years
Setting range[1]:	hours, days, years
Purpose:	The device monitors the predicted lifetime of the sensor (the components exposed to the vessel environment). You can modify the expected sensor lifetime, set up schedules for maintenance reminders, and acknowledge them.
Description:	To access these parameters via SIMATIC PDM: 1. Open the menu **Device** – **Maintenance** and select the **Remaining Sensor Lifetime** tab. 2. After modifying values/units as required, click on **Write** to accept the change, and **Read** to view the effect of the change. 3. Click on **Snooze** to add a year to the **Total Expected Sensor Life**. 4. Click on **Sensor Replaced** to restart the timer and clear any fault messages.

[1] Selectable only via SIMATIC PDM.

8.3.13.1 TIME IN OPERATION (3.7.1.)

Read only. The amount of time the sensor has been operating.

8.3.13.2 REMAINING LIFETIME (3.7.2.)

Read only. LIFETIME EXPECTED (3.7.6.) (Page 122) less TIME IN OPERATION (3.7.1.) (Page 121).

8.3.13.3 REMINDER 1 (REQUIRED) (3.7.3.)

Factory setting:	0.164 years
Setting range:	0 to 20 years
Purpose:	If REMAINING LIFETIME (3.7.2.) (Page 121) is equal to or less than this value, the device generates a Maintenance Required reminder.
Description:	1. Modify values as required. 2. Set REMINDER ACTIVATION (3.7.5.) (Page 121) to the desired option.

8.3.13.4 REMINDER 2 (DEMANDED) (3.7.4.)

Factory setting:	0.019 years
Setting range:	0 to 20 years
Purpose:	If REMAINING LIFETIME (3.7.2.) (Page 121) is equal to or less than this value, the device generates a Maintenance Demanded reminder.
Description:	1. Modify values as required. 2. Set REMINDER ACTIVATION (3.7.5.) (Page 121) to the desired option.

8.3.13.5 REMINDER ACTIVATION (3.7.5.)

Note

Access

To modify this parameter via SIMATIC PDM it must be accessed via the pull-down menu **Device** – **Maintenance**.

Factory setting:	OFF
Setting range:	Reminder 1 (Maintenance Required), Reminder 2 (Maintenance Demanded), Reminders 1 and 2, OFF
Purpose:	Allows you to enable a maintenance reminder.
Description:	1. First set the values in Reminder 1 (Required) (3.7.3.)/Reminder 2 (Demanded) (3.7.4.). 2. Select the desired Reminder Activation option.

8.3.13.6 LIFETIME EXPECTED (3.7.6.)

Note

The device always operates in years. Changing the units affects only the parameter view of the Remaining Sensor Lifetime parameters in SIMATIC PDM.

Factory setting:	10.00 years
Setting range:	0 to 20 years
Purpose:	Allows you to override the factory default.
Description:	Units: hours, days, years, are selectable only via SIMATIC PDM.

8.3.13.7 MAINTENANCE STATUS (3.7.7.)

Indicates which level of maintenance reminder is active.

In SIMATIC PDM, open the menu **Diagnostics** > **Device Diagnostics**, click on the Maintenance tab, and check the Calibration Schedule Status window.

8.3.13.8 ACKNOWLEDGE STATUS (3.7.8.)

Indicates which level of maintenance reminder has been acknowledged.

In SIMATIC PDM, open the menu **Diagnostics** > **Device Diagnostics**, click on the Maintenance tab, and check the Calibration Schedule Status window.

8.3.13.9 ACKNOWLEDGE (3.7.9.)

Purpose:	Acknowledges the current maintenance reminder.
Description:	To acknowledge a reminder via SIMATIC PDM: • Open the menu **Diagnostics** > **Device Diagnostics** and click on the tab Maintenance. • In the Calibration Schedule section, click on Acknowledge Warnings. To acknowledge a reminder via the local control buttons or hand-held programmer: • Press **RIGHT** arrow twice to open parameter view and activate Edit Mode. • Press **RIGHT** arrow to acknowledge the reminder.

8.4 SERVICE (4.)

8.4.1 DEMO MODE (4.1.)

Factory setting:	OFF
Setting range:	ON or OFF
Purpose:	Used to set up for demonstrations: reduces the time between measurements and the accuracy for demonstration purposes.

8.4.2 MASTER RESET (4.2.)

Note

- Following a reset to Factory Defaults, the LCD displays the Quick Start wizard.
- Following a reset to Factory Defaults, complete reprogramming is required.

Factory setting:	Factory Defaults
Setting range:	Factory Defaults, Warm Start
Purpose:	Resets all parameter to factory defaults, with certain exceptions. The list of exceptions includes, but is not limited to: • Language • Identification parameters (such as Tag, Installation Date) • Device Address • Write Protection • Auto False Echo Suppression • Auto False Echo Suppression Range
Description:	To perform a reset to factory defaults via SIMATIC PDM, open the menu **Device** – **Master Reset** and click on OK.

8.4.3 POWERED HOURS (4.3.)

Read only unless WRITE PROTECTION (6.1.) (Page 131) is set to Unlock (2457). Displays the number of hours the unit has been powered up since manufacture.

In SIMATIC PDM, open the menu **Device** – **Wear**.

8.4.4 POWERON RESETS (4.4.)

Read only unless WRITE PROTECTION (6.1.) (Page 131) is set to Unlock (2457). The number of power cycles that have occurred since manufacture.

In SIMATIC PDM, open the menu **Device** > **Wear**.

8.4.5 LCD BACKLIGHT (4.5.)

Factory setting:	128 seconds
Setting range:	0 (backlight off) to 128 seconds (>120 means backlight always on)
Purpose:	Time the backlight remains on.

8.4.6 LCD CONTRAST (4.6.)

Factory setting:	8
Setting range:	0 to 20
Purpose:	The factory setting is for optimum visibility at room temperature and in average light conditions. Extremes of temperature will lessen the contrast.
Description:	Contrast setting will depend on ambient temperature. Adjust the value to improve visibility in different temperatures and light conditions. Change the value in small steps to ensure you can continue to read the display.

8.4.7 SERVICE SCHEDULE (4.7.)

Note

- Four sets of parameters allow you to monitor the Device/Sensor Lifetimes and set up Maintenance/Service schedules, based on operating hours instead of a calendar-based schedule, see also REMAINING DEVICE LIFETIME (3.6) (Page 118), REMAINING SENSOR LIFETIME (3.7.) (Page 120), and CALIBRATION SCHEDULE (4.8.) (Page 127).
- Performing a reset to Factory Defaults will reset all the Maintenance Schedule parameters to their factory defaults.
- The device operates in years. To view Service Interval parameters in hours or days (via SIMATIC PDM only) see SERVICE INTERVAL (4.7.6.) (Page 126).

Factory setting:	years
Setting range[1]:	Hours, days, years
Purpose:	The device tracks service intervals based on operating hours and monitors the predicted lifetime to the next service. You can modify the Total Service Interval, set schedules for maintenance reminders, and acknowledge them. The maintenance warnings and reminders are communicated to the end user through status information. This information can be integrated into any Asset Management system. For optimal use, we recommend that you use SIMATIC PCS7 Asset Management Software in conjunction with SIMATIC PDM.
Description:	To access these parameters via SIMATIC PDM: • Open the menu **Device** – **Maintenance** and select the Service Schedule tab. • After modifying values/units as required, click on Write to accept the change, and Read to view the effect of the change. • Click on Service Performed to restart the timer and clear any fault messages.

[1] Selectable only via SIMATIC PDM.

8.4.7.1 TIME SINCE LAST SERVICE (4.7.1.)

Time elapsed since last service. Can be reset to zero after performing a service. Can be reset locally by entering 0 in this parameter.

To reset to zero:

- In SIMATIC PDM, open the menu **Device** – **Maintenance**, click on the Service Schedule tab, and click on Service Performed to restart the timer and clear any fault messages.
- Via the handheld programmer, manually reset Time since Last Service to zero.

8.4.7.2 TIME UNTIL NEXT SERVICE (4.7.2.)

Read only. SERVICE INTERVAL (4.7.6.) (Page 126) less TIME SINCE LAST SERVICE (4.7.1.) (Page 125).

8.4.7.3 REMINDER 1 (REQUIRED) (4.7.3.)

Factory setting:	0.164 years
Setting range:	0 to 20 years
Purpose:	If TIME UNTIL NEXT SERVICE (4.7.2.) (Page 125) is equal to or less than this value, the device generates a Maintenance Required reminder.
Description:	1. Modify values as required. 2. Set REMINDER ACTIVATION (4.7.5.) (Page 125) to the desired option.

8.4.7.4 REMINDER 2 (DEMANDED) (4.7.4.)

Factory setting:	0.019 years
Setting range:	0 to 20 years
Purpose:	If TIME UNTIL NEXT SERVICE (4.7.2.) (Page 125) is equal to or less than this value, the device generates a Maintenance Demanded reminder.
Description:	1. Modify values as required. 2. Set REMINDER ACTIVATION (4.7.5.) (Page 125) to the desired option.

8.4.7.5 REMINDER ACTIVATION (4.7.5.)

Note

Modifications via SIMATIC PDM

Parameter is accessed via the menus **Device** – **Maintenance**.

Factory setting:	Timer OFF
Setting range:	Timer OFF
	ON NO LIMITS
	ON REMinders 1 and 2 checked
	ON REMinder 2 (Maintenance Demanded) checked
Purpose:	Allows you to enable a maintenance reminder.
Description:	1. First set the values in REMINDER 1 (REQUIRED) (4.7.3.) (Page 125) / REMINDER 2 (DEMANDED) (4.7.4.) (Page 125). 2. Select the desired Reminder Activation option.

8.4.7.6 SERVICE INTERVAL (4.7.6.)

Note

The device always operates in years. Changing the units affects only the parameter view of the Remaining Sensor Lifetime parameters in SIMATIC PDM.

Factory setting:	1.0 year
Setting range:	0 to 20 years
Purpose:	User-configurable recommended time between product inspections.
Description:	Units: hours, days, years, are selectable only via SIMATIC PDM.

8.4.7.7 MAINTENANCE STATUS (4.7.7.)

Indicates which level of maintenance reminder is active.

In SIMATIC PDM, open the menu **Diagnostics** > **Device Diagnostics**, click on the Maintenance tab, and check the Calibration Schedule Status window.

8.4.7.8 ACKNOWLEDGE STATUS (4.7.8.)

Indicates which level of maintenance reminder has been acknowledged.

In SIMATIC PDM, open the menu **Diagnostics** > **Device Diagnostics**, click on the Maintenance tab, and check the Calibration Schedule Status window.

8.4.7.9 ACKNOWLEDGE (4.7.9.)

Purpose:	Acknowledges the current maintenance reminder.
Description:	To acknowledge a reminder via SIMATIC PDM: • Open the menu **Diagnostics** > **Device Diagnostics** and click on the tab Maintenance. • In the Calibration Schedule section, click on Acknowledge Warnings. To acknowledge a reminder via the local control buttons or hand-held programmer: • Press **RIGHT** arrow twice to open parameter view and activate Edit Mode. • Press **RIGHT** arrow to acknowledge the reminder.

8.4.8 CALIBRATION SCHEDULE (4.8.)

Note

- Four sets of parameters allow you to monitor the Device/Sensor Lifetimes and set up Maintenance/Service schedules, based on operating hours instead of a calendar-based schedule, see also REMAINING DEVICE LIFETIME (3.6) (Page 118), REMAINING SENSOR LIFETIME (3.7.) (Page 120), and SERVICE SCHEDULE (4.7.) (Page 124).
- Performing a reset to Factory Defaults will reset all the Maintenance Schedule parameters to their factory defaults.
- The device operates in years. To view Calibration Interval parameters in hours or days (via SIMATIC PDM only) see CALIBRATION INTERVAL (4.8.6.) (Page 129).

Factory setting:	years
Setting range[1)]:	Hours, days, years
Purpose:	The device tracks calibration intervals based on operating hours and monitors the predicted lifetime to the next calibration. You can modify the Total Calibration Interval, set schedules for maintenance reminders, and acknowledge them.
Description:	To access these parameters via SIMATIC PDM: • Open the menu **Device** – **Maintenance** and select the Calibration Schedule tab. • After modifying values/units as required, click on Write to accept the change, and Read to view the effect of the change. • Click on Calibration Performed to restart the timer and clear any fault messages.

1) Selectable only via SIMATIC PDM.

8.4.8.1 TIME SINCE LAST CALIBRATION (4.8.1.)

Time elapsed since last calibration. Can be reset to zero after performing a calibration. Can be reset locally by entering 0 in this parameter.

To reset to zero:

- In SIMATIC PDM, open the menu Device – Maintenance, click on the Calibration Schedule tab, and click on Calibration Performed to restart the timer and clear any fault messages.
- Via the handheld programmer, manually reset **Time since Last Calibration (4.8.1.)** to zero.

8.4.8.2 TIME UNTIL NEXT CALIBRATION (4.8.2.)

Read only. CALIBRATION INTERVAL (4.8.6.) (Page 129) less TIME SINCE LAST CALIBRATION (4.8.1.) (Page 128).

8.4.8.3 REMINDER 1 (REQUIRED) (4.8.3.)

Factory setting:	0.164 years
Setting range:	0 to 20 years
Purpose:	If TIME UNTIL NEXT CALIBRATION (4.8.2.) (Page 128) is equal to or less than this value, the device generates a Maintenance Required reminder.
Description:	1. Modify values as required. 2. Set REMINDER ACTIVATION (4.8.5.) (Page 129) to the desired option.

8.4.8.4 REMINDER 2 (DEMANDED) (4.8.4.)

Factory setting:	0.019 years
Setting range:	0 to 20 years
Purpose:	If TIME UNTIL NEXT CALIBRATION (4.8.2.) (Page 128) is equal to or less than this value, the device generates a Maintenance Demanded reminder.
Description:	1. Modify values as required. 2. Set Reminder Activation (4.8.5.) (Page 129) to the desired option.

8.4.8.5 REMINDER ACTIVATION (4.8.5.)

Note

Access

To modify this parameter via SIMATIC PDM it must be accessed via the pull-down menu **Device** > **Maintenance**.

Factory setting:	Timer OFF
Setting range:	Timer OFF
	ON NO LIMITS
	ON REMinders 1 and 2 checked
	ON REMinder 2 (Maintenance Demanded) checked
Purpose:	Allows you to enable a maintenance reminder.
Description:	1. First set the values in REMINDER 1 (REQUIRED) (4.8.3.) (Page 128) REMINDER 2 (DEMANDED) (4.8.4.) (Page 128). 2. Select the desired Reminder Activation option.

8.4.8.6 CALIBRATION INTERVAL (4.8.6.)

Note

The device always operates in years. Changing the units affects only the parameter view of the Calibration Interval parameters in SIMATIC PDM.

Factory setting:	1.0 year
Setting range:	0 to 20 years
Purpose:	User-configurable recommended time between product inspections.
Description:	Units: hours, days, years, are selectable only via SIMATIC PDM.

8.4.8.7 MAINTENANCE STATUS (4.8.7.)

Indicates which level of maintenance reminder is active.

In SIMATIC PDM, open the menu **Diagnostics** > **Device Diagnostics**, click on the Maintenance tab, and check the Calibration Schedule Status window.

8.4.8.8 ACKNOWLEDGE STATUS (4.8.8.)

Indicates which level of maintenance reminder has been acknowledged.

In SIMATIC PDM, open the menu **Diagnostics** > **Device Diagnostics**, click on the Maintenance tab, and check the Calibration Schedule Status window.

8.4.8.9 ACKNOWLEDGE (4.8.9.)

Purpose:	Acknowledges the current maintenance reminder.
Description:	To acknowledge a reminder via SIMATIC PDM: • Open the menu **Diagnostics** > **Device Diagnostics** and click on the tab Maintenance. • In the Calibration Schedule section, click on Acknowledge Warnings. To acknowledge a reminder via the local control buttons or hand-held programmer: • Press **RIGHT** arrow twice to open parameter view and activate Edit Mode. • Press **RIGHT** arrow to acknowledge the reminder.

8.4.9 STORED SOFTWARE VERSION (4.9.)

Displays the version string of the firmware previously uploaded to the local display (if any).

8.5 COMMUNICATION (5.)

8.5.1 DEVICE ADDRESS (5.1.)

Factory setting:	0
Setting range:	0 to 63[1)]
Purpose:	Sets the device address or poll ID on a HART network. For point-to-point configurations, the standard address is 0. For multidrop configurations, use a non-zero HART address.
Description:	To place the LR560 into HART multidrop: • Set the mA Output Mode (2.6.6.) to Fixed. • Set the Device Address to a non-zero value. To set Device Address via SIMATIC PDM: • Open the project in Process Device Network View then right-click on the device. • Go to **Object Properties** > **Connection** to access the field Short Address.

1) Range should be limited to 0 to 15 for a HART 5 master.

Note

Process dependent on HART version

For HART 5 devices, this was a one step process. With HART 6 and above, this is a two-step process.

Note

SIMATIC PDM

SIMATIC PDM only allows addresses 0-15.

8.5.2 REMOTE LOCKOUT (5.2.)

Factory setting:	OFF
Setting range:	OFF, ON
Purpose:	Enables/disables the read/write access to parameters via remote communications. If locked via the handheld programmer, it can be unlocked only via the handheld programmer. If locked via AMS, it can be reset via AMS.

8.6 SECURITY (6.)

8.6.1 WRITE PROTECTION (6.1.)

Factory setting:	Unlock value (2457): Lock Off	
Setting range:	0 to 9999	
	Unlock value (2457)	Lock Off
	Any other value	Lock On
Purpose:	Prevents any changes to parameters.	
Description:	• To turn Lock On, key in any value other than the Unlock Value 2457. • To turn Lock Off, key in the Unlock Value 2457.	

8.7 LANGUAGE (7.)

Factory setting:	English
Setting range:	English, Deutsch, Français, Español, 简体中文
Purpose:	Selects the language to be used on the local display.

Service and maintenance

9

9.1 Basic safety notes

Note

The device is maintenance-free.

9.1.1 Maintenance

The device is maintenance-free. However, a periodic inspection according to pertinent directives and regulations must be carried out.

An inspection can include, for example, check of:

- Ambient conditions
- Seal integrity of the process connections, cable entries, and cover
- Reliability of power supply, lightning protection, and grounds

WARNING

Impermissible repair and maintenance of the device

- Repair and maintenance must be carried out by Siemens authorized personnel only.

WARNING

Impermissible repair of explosion protected devices

Risk of explosion in hazardous areas

- Repair must be carried out by Siemens authorized personnel only.

NOTICE

Penetration of moisture into the device

Device damage.

- Make sure when carrying out cleaning and maintenance work that no moisture penetrates the inside of the device.

WARNING

Leaks in the sample gas path

Risk of poisoning.

When measuring toxic process media, these can be released or collect in the device if there are leaks in the sample gas path.

- Purge the device as described in Commissioning (Page 34).
- Dispose of the toxic process media displaced by purging in an environmentally friendly manner.

9.2 Cleaning

Cleaning the enclosure

- Clean the outside of the enclosure with the inscriptions and the display window using a cloth moistened with water or a mild detergent.
- Do not use any aggressive cleansing agents or solvents, e.g. acetone. Plastic parts or the painted surface could be damaged. The inscriptions could become unreadable.

WARNING

Electrostatic charge

Risk of explosion in hazardous areas if electrostatic charges develop, for example, when cleaning plastic surfaces with a dry cloth.

- Prevent electrostatic charging in hazardous areas.

9.3 Maintenance and repair work

WARNING

Maintenance during continued operation in a hazardous area

There is a risk of explosion when carrying out repairs and maintenance on the device in a hazardous area.

- Isolate the device from power.

- or -

- Ensure that the atmosphere is explosion-free (hot work permit).

WARNING

Humid environment

Risk of electric shock.

- Avoid working on the device when it is energized.
- If working on an energized device is necessary, ensure that the environment is dry.
- Make sure when carrying out cleaning and maintenance work that no moisture penetrates the inside of the device.

CAUTION

Hot surfaces

Risk of burns during maintenance work on parts having surface temperatures exceeding 70 °C (158 °F).

- Take corresponding protective measures, for example by wearing protective gloves.
- After carrying out maintenance, remount touch protection measures.

WARNING

Enclosure open

Risk of explosion in hazardous areas as a result of hot components and/or charged capacitors inside the device.

To open the device in a hazardous area:

1. Isolate the device from power.
2. Observe the wait time specified in Technical data (Page 144) or on the warning sign before opening the device.
3. Visually inspect sensor inlet and outlet.

Exception: Devices exclusively having the type of protection "Intrinsic safety Ex i" may be opened in an energized state in hazardous areas.

CAUTION

Hazardous voltage at open device

Risk of electric shock when the enclosure is opened or enclosure parts are removed.

- Before you open the enclosure or remove enclosure parts, de-energize the device.
- If maintenance measures in an energized state are necessary, observe the particular precautionary measures. Have maintenance work carried out by qualified personnel.

WARNING

Hot, toxic or corrosive process media

Risk of injury during maintenance work.

When working on the process connection, hot, toxic or corrosive process media could be released.

- As long as the device is under pressure, do not loosen process connections and do not remove any parts that are pressurized.
- Before opening or removing the device ensure that process media cannot be released.

WARNING

Improper connection after maintenance

Risk of explosion in areas subject to explosion hazard.

- Connect the device correctly after maintenance.
- Close the device after maintenance work.

Refer to Power (Page 144).

9.4 Return procedure

Enclose the bill of lading, return document and decontamination certificate in a clear plastic pouch and attach it firmly to the outside of the packaging.

Required forms

- Delivery note
- Return goods delivery note (http://www.siemens.com/processinstrumentation/returngoodsnote)

  with the following information:

  – Product (item description)

  – Number of returned devices/replacement parts

  – Reason for returning the item(s)
- Decontamination declaration (http://www.siemens.com/sc/declarationofdecontamination)

  With this declaration you warrant "that the device/replacement part has been carefully cleaned and is free of residues. The device/replacement part does not pose a hazard for humans and the environment."

  If the returned device/replacement part has come into contact with poisonous, corrosive, flammable or water-contaminating substances, you must thoroughly clean and decontaminate the device/replacement part before returning it in order to ensure that all hollow areas are free from hazardous substances. Check the item after it has been cleaned.

  Any devices/replacement parts returned without a decontamination declaration will be cleaned at your expense before further processing.

Note

Return of products with lithium batteries

Lithium batteries are dangerous goods according to the Regulation of Dangerous Goods, UN 3090 and UN 3091.

- Remove lithium batteries prior to shipment.
- If the battery cannot be removed, return the product according to the Regulation of Dangerous Goods with special transport documentation.

9.5 Disposal

Devices described in this manual should be recycled. They may not be disposed of in the municipal waste disposal services according to the Directive 2012/19/EC on waste electronic and electrical equipment (WEEE).

Devices can be returned to the supplier within the EC, or to a locally approved disposal service for eco-friendly recycling. Observe the specific regulations valid in your country.

Further information about devices containing batteries can be found at: Information about battery / product return (WEEE) (https://support.industry.siemens.com/cs/document/109479891/)

Diagnosing and troubleshooting 10

10.1 Device status icons

Icon	Priority Level	Meaning
	1	• Maintenance alarm • Measurement values are not valid
	2	• Maintenance warning: maintenance demanded immediately • Measured signal still valid
	3	• Maintenance required • Measured signal still valid
	1	• Process value has reached an alarm limit
	2	• Process value has reached a warning limit
	3	• Process value has reached a tolerance limit
	1	• Configuration error • Device will not work because one or more parameters/components is incorrectly configured
	2	• Configuration warning • Device can work but one or more parameters/components is incorrectly configured
	3	• Configuration changed • Device parameterization not consistent with parameterization in project. Look for info text.
	1	• Manual operation (local override) • Communication is good; device is in manual mode.
	2	• Simulation or substitute value • Communication is good; device is in simulation mode or works with substitute values.
	3	• Out of operation • Communication is good; device is out of action.
		• No data exchange
		• Write access enabled
		• Write access disabled

10.2 Fault codes

Note

- If more than one fault is present, the device status indicator and text for each fault alternate at 2 second intervals.
- Some faults cause the device to go to Fail-safe mode (Fault 52). These are indicated with an asterisk (*).

Code/ Icon		Meaning	Corrective Action
S: 0	*	The device was unable to get a measurement within the Fail-safe LOE Timer period. Possible causes: faulty installation, antenna material buildup, foaming/other adverse process conditions, invalid configuration range.	• Ensure installation details are correct. • Ensure no antenna material buildup. Clean if necessary. • Adjust process conditions to minimize foam or other adverse conditions. • Correct configuration range. • If fault persists, contact your local Siemens representative.
S: 2	*	Unable to collect profile because of a power condition that is outside the operating range of the device.	Repair required: contact your local Siemens representative.
S: 3		Device is nearing its lifetime limit according to the value set in Maintenance Required Limit.	Replacement is recommended
S: 4		Device is nearing its lifetime limit according to the value set in Maintenance Demanded Limit.	Replacement is recommended.
S: 6		Sensor is nearing its lifetime limit according to the value set in Maintenance Required Limit.	Replacement is recommended.
S: 7		Sensor is nearing its lifetime limit according to the value set in Maintenance Demanded Limit.	Replacement is recommended.
S: 8		Service interval as defined in Maintenance Required Limit has expired.	Perform service.
S: 9		Service interval as defined in Maintenance Demanded Limit has expired.	Perform service.

Code/ Icon		Meaning	Corrective Action
S: 11		Internal temperature sensor failure.	Repair required: contact your local Siemens representative.
S: 12		Internal temperature of device has exceeded specifications: it is operating outside its temperature range.	• Relocate device and/or lower process temperature enough to cool device. • Inspect for heat-related damage and contact your local Siemens representative if repair is required. • Fault code will persist until a manual reset is performed using SIMATIC PDM or the local display.
S: 17		Calibration interval as defined in Maintenance Required Limit has expired.	Perform calibration.
S: 18		Calibration interval as defined in Maintenance Demanded Limit has expired.	Perform calibration.
S: 25		Internal error.	Reset power. If fault persists, contact your local Siemens representative.
S: 27		Internal device failure caused by an External RAM memory error.	Repair required: contact your local Siemens representative.
S: 28	*	Internal device failure caused by a RAM memory error.	Repair required: contact your local Siemens representative.
S: 29	*	EEPROM damaged.	Repair required: contact your local Siemens representative.
S: 30		EEPROM corrupt.	Reset power. If fault persists, contact your local Siemens representative.
S: 31	*	Flash error.	Repair required: contact your local Siemens representative.
S: 33	*	Factory calibration for the internal temperature sensor has been lost.	Repair required: contact your local Siemens representative.

Code/ Icon		Meaning	Corrective Action
S: 34	*	Factory calibration for the device has been lost.	Repair required: contact your local Siemens representative.
S: 48	*	User configuration is invalid. One or more of parameters: Low Calibration Point, High Calibration Point, Volume breakpoints, and/or Auto False-Echo Suppression, are set to invalid values.	• Reconfigure the unit. • Ensure the difference between High Calibration Point and Low Calibration Point is not less than or equal to zero; do a Master Reset.
S: 52		Fail-safe is activated. Possible causes: 1. hardware failure 2. memory failure 3. Fail-safe LOE timer expired– possible causes: faulty installation, antenna material buildup, foaming/other adverse process conditions, invalid calibration range.	• For 3: Correct configuration; ensure installation is correct; • no antenna buildup; • adjust process conditions to minimize foaming/other adverse conditions; • correct calibration range. If fault persists, or for 1 and 2, contact your local Siemens representative.
S: 54	*	Fault occurs when the PV exceeds the user configured min./max. range for mA output.	Adjust process to fall within limits of min./max. mA values or adjust limits of mA if possible.
S: 66 to S:83		Device error. NOTE: Fault text and icons appear only on the local display.	Repair required: contact your local Siemens representative.
S: 94		Device error. Possible causes: 1. Voltage low at the LR560 2. Hardware defect	For 1: Confirm voltage is within specifications and modify wiring or increase source voltage accordingly, see Typical connection drawing (Page 167). For 2: Repair required: contact your local Siemens representative.
S: 95 to S:112		Device error. NOTE: Fault text and icons appear only on the local display.	Repair required: contact your local Siemens representative.

10.3 Operation troubleshooting

Operating symptoms, probable causes, and resolutions.

Symptom	Cause	Action
Display shows S: 0 LOE	level or target is out of range	• check specifications • check LOW CALIBRATION POINT (2.3.1.) (Page 101). • increase CONFIDENCE (2.7.6.1) (Page 112).
Display shows S: 0 LOE	material build-up on antenna	• Use the air purge feature to clean the antenna • re-locate SITRANS LR560.
Display shows S: 0 LOE	location or aiming: • poor installation • flange not level • Auto False Echo Suppression may be incorrectly applied	• check to ensure nozzle is vertical • ensure end of antenna protrudes from end of nozzle • review Echo processing (Page 157) • ensure Auto False Echo Suppression Range is set correctly
Display shows S: 0 LOE	antenna malfunction: • temperature too high • physical damage	• check temperature in MAXIMUM MEASURED VALUE (3.4.2.) (Page 116). • relocate
Reading does not change, but the level does	SITRANS LR560 processing wrong echo, for example, vessel wall, or structural member	• re-locate SITRANS LR560 • check nozzle for internal burrs or welds • rotate device 90° • use AUTO FALSE ECHO SUPPRESSION (2.8.1) (Page 113) if necessary.
Measurement is consistently off by a constant amount	• setting for LOW CALIBRATION POINT (2.3.1.) (Page 101) not correct • setting for SENSOR OFFSET (2.3.3.) (Page 102) not correct	• check distance from sensor reference point to LOW CALIBRATION POINT (2.3.1.) (Page 101) • check SENSOR OFFSET (2.3.3.) (Page 102)
Screen blank	power error	• check nameplate rating against voltage supply • check power wiring or source
Reading erratic	echo confidence weak	• refer to CONFIDENCE (2.7.6.1) (Page 112). • use AUTO FALSE ECHO SUPPRESSION (2.8.1) (Page 113) and AUTO FALSE ECHO SUPPRESSION RANGE (2.8.2) (Page 113) • use foam deflector or stillpipe
	material filling	• Re-locate SITRANS LR560.
Reading response slow	FILL RATE/MIN (2.4.2.) (Page 103) setting incorrect	• increase measurement response if possible

Symptom	Cause	Action
Reads correctly but occasionally reads high when vessel is not full	• detecting close range echo • build up near top of vessel or nozzle • nozzle problem	• Use the air purge feature to clean the antenna • use AUTO FALSE ECHO SUPPRESSION (2.8.1) (Page 113) and AUTO FALSE ECHO SUPPRESSION RANGE (2.8.2) (Page 113).
Level reading lower than material level	• material is within Near Range zone • multiple echoes processed	• decrease NEAR RANGE (2.7.1.) (Page 108) (minimum value depends on antenna type) • raise SITRANS LR560 • ensure ALGORITHM (2.7.3.1) (Page 109) is set to **TF** (First echo)

10.4 Communication troubleshooting

1. Check the following:
   - There is power at the instrument.
   - The local display shows the relevant data.
   - The device can be programmed using the handheld programmer.
   - If any fault codes are being displayed see Fault codes (Page 139) for a detailed list.
2. Verify that the wiring connections are correct.
3. See the table below for specific symptoms.

Symptom	Corrective action
The device cannot be programmed via the handheld programmer.	• Ensure **Write Protect (6.1.)** is set to the unlock value.
You try to set a SITRANS LR560 parameter via remote communications but the parameter remains unchanged.	• Ensure **Write Protect (6.1.)** is set to the unlock value, then try setting the parameter via the handheld programmer. • Some parameters can be changed only when the device is not scanning. Try pressing Mode to put the device into PROGRAM mode.

If you continue to experience problems, go to our website (www.siemens.com/LR560) and check the FAQs for SITRANS LR560, or contact your Siemens representative.

Technical data 11

Note

Device specifications

Siemens makes every attempt to ensure the accuracy of these specifications but reserves the right to change them at any time.

11.1 Power

Nominal 24 V DC at 550 Ohm loop resistance[1]. For other configurations, refer to Loop Power (Page 167).

- Maximum 30 V DC
- 4 to 20 mA loop power

[1] Check the device label for the characteristics of the device, and confirm the loop load.

11.2 Performance

Measurement Accuracy[1] (measured in accordance with IEC 60770-1)

Maximum measured error	5 mm (0.2") including hysteresis and non-repeatability[2]	
Frequency	78 to 79 GHz FMCW	
Maximum measurement range[3]	40 m version	40 m (131 ft)
	100 m version	100 m (328 ft)
Minimum detectable distance	400 mm (15.7") from sensor reference point[4]	
Update time[5]	maximum 10 seconds, depending on setting for RESPONSE RATE (2.4.1.) (Page 102)	
Influence of ambient temperature	< 0.003%/K (average over full temperature range, referenced to maximum range)	
Long-term stability	<0.1%/24 months	
Dielectric constant of material measured	for ranges up to 20 m (65.6 ft)	minimum dK = 1.6
	for ranges up to 100 m (328 ft)	minimum dK = 2.5
Memory	non-volatile EEPROM	
	no battery required	

[1] Reference conditions: POSITION DETECT (2.7.3.3) (Page 109) set to Center and ALGORITHM (2.7.3.1) (Page 109) set to True First Echo.

[2] Under severe EMI/EMC environments per IEC61326-1 or NAMUR NE21, the device error may increase to a maximum of 25mm (1").

[3] From sensor reference point.

[4] See Dimension drawings (Page 149).

[5] Reference conditions: RESPONSE RATE (2.4.1.) (Page 102) set to **FAST**

11.3 Construction

Process connection:	Universal flat-faced flange[1)]	3"/80 mm, 4"/100 mm, 6"/150 mm Material: 316L (1.4404 or 1.4435), or 304 stainless steel
	Aimer flange[1)]	3"/80 mm, 4"/100 mm, 6"/150 mm Material: Polyurethane powder-coated cast aluminum
	Universal stamped flange[1)]	3"/80 mm, 4"/100 mm, 6"/150 mm Material: 304 stainless steel
Enclosure	Construction	316L/1.4404 stainless steel
	Conduit entry	M20x1.5, or ½" NPT
	Conduit entry connector (optional)	M12 connector (shipped with M20 to M12 adaptor) or, 7/8" connector (shipped with 1/2" NPT to 7/8" adaptor)
	Ingress protection	Type 4X, Type 6, IP68
	Lid with window	Polycarbonate (window material)
	Sun shield (optional)	304 stainless steel
Lens antenna material	40 m version	PEI
	100 m version	PEEK
Air purge connection	equipped with female 1/8" NPT fitting	
Weight (excluding extensions):	3" stainless steel flange model	3.15 kg (6.94 lb)

[1)] Universal flange mates with EN 1092-1 (PN16)/ASME B16.5 (150 lb)/JIS 2220 (10K) bolt hole pattern.

11.4 Operating conditions

Note

- For the specific configuration you are about to use or install, check transmitter nameplate and see Approvals data (Page 147).
- Use appropriate conduit seals to maintain IP or NEMA rating.

Location	indoor/outdoor
Altitude	5000 m (16,404 ft) max.
Ambient temperature	−40 to +80 °C (−40 to +176 °F)
Storage temperature	−40 to +80 °C (−40 to +176 °F)
Relative humidity	suitable for outdoor use Type 4X, Type 6, IP68 enclosure (see note above)
Installation category	I
Pollution degree	4

Reference operating conditions according to IEC 60770-1

Ambient temperature	15 to 25 °C (59 to 77 °F)
Humidity	45 to 75% relative humidity
Ambient pressure	860 to 1060 mbar a (86000 to 106000 N/m^2 g)

11.5 Process

Temperature and pressure[1)]

Note

Pressure

Universal stamped flanges are to be used for 0.5 bar max pressure only.

Version	Stainless steel flange	Aimer flange 0.5 bar max.	Aimer flange 3.0 bar max
40 m	–40 to +100 °C (–40 to +212 °F)	–40 to +100 °C (–40 to +212 °F)	–40 to +100 °C (–40 to +212 °F)
100 m	–40 to +200 °C (–40 to +392 °F)	–40 to +200 °C (–40 to +392 °F)	–40 to +120 °C (–40 to +248 °F)

[1)] Maximum and minimum temperatures are dependent on the process connection, antenna and O-ring materials. Use of the Easy Aimer limits maximum temperature.

11.6 Approvals data

Note

Approvals

The device label lists the approvals that apply to your device.

General			CSA$_{US/C}$, FM, CE, RCM
Radio			Europe (RED), FCC, Industry Canada
Hazardous	Non-sparking/Energy Limited	Europe/International	ATEX II 3G Ex nA/nL IIC T4 Gc
		Brazil	INMETRO: DNV 12.0085 X Ex nA IIC T4 Gc -40 ºC ≤ Ta ≤ +80 ºC Un = 32 Vcc
		China	Ex nA IIC T4 Gc
	Dust Ignition Proof	Europe/International	ATEX II 1D, 1/2D, 2D Ex ta IIIC T139 °C Da IP68 IECEx SIR 09.0149X
		Brazil	INMETRO: DNV 12.0085 X Ex ta IIIC T139 ºC Da IP68 -40 ºC ≤ Ta ≤ +80 ºC
		China	Ex tD A20 IP68 T139ºC
	Dust Ignition Proof	US/Canada	FM/CSA: Class II, Div. 1, Groups E, F, G Class III T4
	Non-incendive	US/Canada	FM/CSA Class I, Div. 2, Groups A, B, C, D, T4

CE Electromagnetic Compatibility (EMC) conformity	
Emission	EN 55011 / CISPR-11
Immunity	EN/IEC 61326-1 (Industry) NAMUR NE 21

11.7 Communication: HART

Load	230 to 550 Ω, 230 to 500 Ω when connecting a coupling module
Max line length[1)]	multi-wire: 1500 m (4921 ft)
Protocol	HART[2),] Version 6.0

[1)] Max. length depends on wire type. See www.hartcomm.org (www.hartcomm.org) for more details.

[2)] HART is a registered trademark of HART Communication Foundation.

11.8 Programmer (infrared keypad)

The battery is non-replaceable with a lifetime expectancy of 10 years in normal use. To estimate the lifetime expectancy, check the nameplate on the back for the serial number. The date of manufacture is encoded in the serial number. For example, the following was manufactured on March 5, 2016:

PBD/**H3050001**

H: year of manufacture (H is the alpha code referring to 2016; J refers to 2017 and so on).

3: month of manufacture

05: day of manufacture

0001: 4-digit sequential

Year 2010: Alpha code = A	Year 2016: Alpha code = H
Year 2011: Alpha code = B	Year 2017: Alpha code = J
Year 2012: Alpha code = C	Year 2018: Alpha code = K
Year 2013: Alpha code = D	Year 2019: Alpha code = L
Year 2014: Alpha code = E	Year 2020: Alpha code = M
Year 2015: Alpha code = F	

Siemens Milltronics Infrared IS (Intrinsically Safe) Handheld Programmer for hazardous and all other locations (battery is non-replaceable).

Approvals	CE FM/CSA Class I, II, III, Div. 1, Gr. A to G T6 ATEX 1 GD Ex ia op is IIC T4 Ga Ex ia op is IIIC T135°C Da IECEx Ex ia op is IIC T4 Ga Ex ia op is IIIC T135°C Da INMETRO Ex ia op is IIC T4 Ga Ex ia op is IIIC T135°C Da
Ambient temperature	−20 to +50 °C (−5 to +122 °F)
Interface	proprietary infrared pulse signal
Power	3 V non-replaceable lithium battery
Weight	150 g (0.3 lb)
Color	black
Part number	7ML1930-1BK

Dimension drawings

12

12.1 SITRANS LR560 with stainless steel universal flat-faced flange

Note

Bolt hole patterns and dimensions

Refer to Universal slotted flange (Page 153) for bolt hole patterns and dimensions.

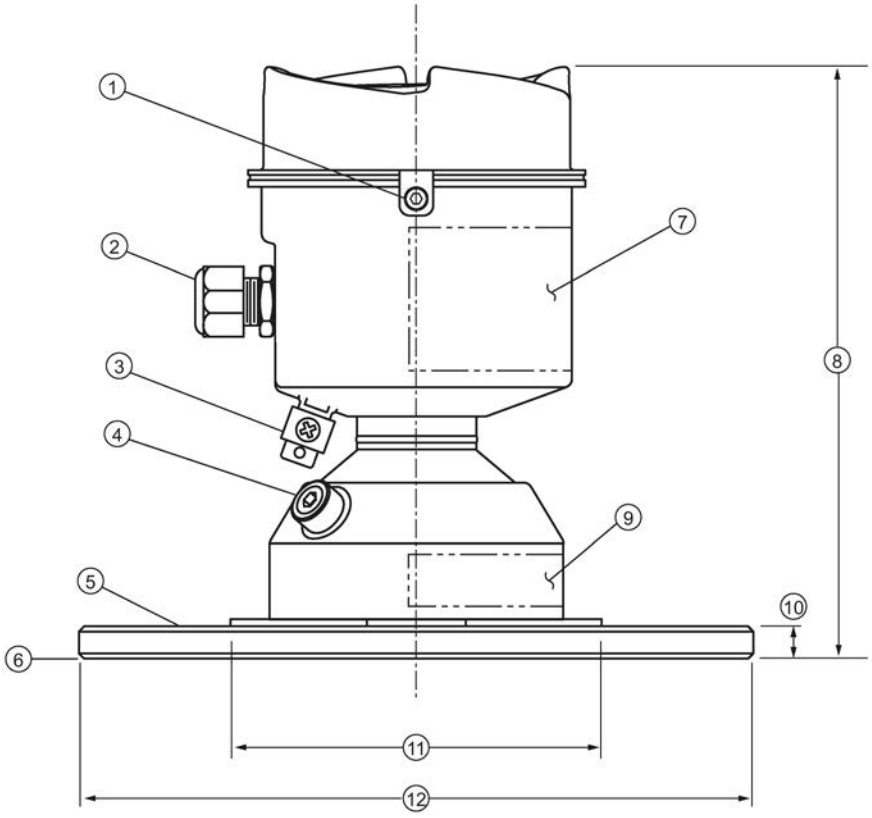

Dimensions are in mm (inch)

① lid lock
② cable gland [1)]
③ grounding lug
④ purge inlet
⑤ process connection, flange
⑥ sensor reference point
⑦ device label
⑧ height: 176 (6.93)
⑨ pressure/temperature related information
⑩ thickness: 9.6 (0.38)
⑪ 110 (4.33)
⑫ flange OD:
3": 200 (7.87)
4": 229 (9.02)
6": 285 (11.22)

[1)] Shipped with product, packed in a separate bag.

12.2 SITRANS LR560 with 3" aimer flange

Note

Bolt hole patterns and dimensions

Refer to Universal slotted flange (Page 153) for bolt hole patterns and dimensions.

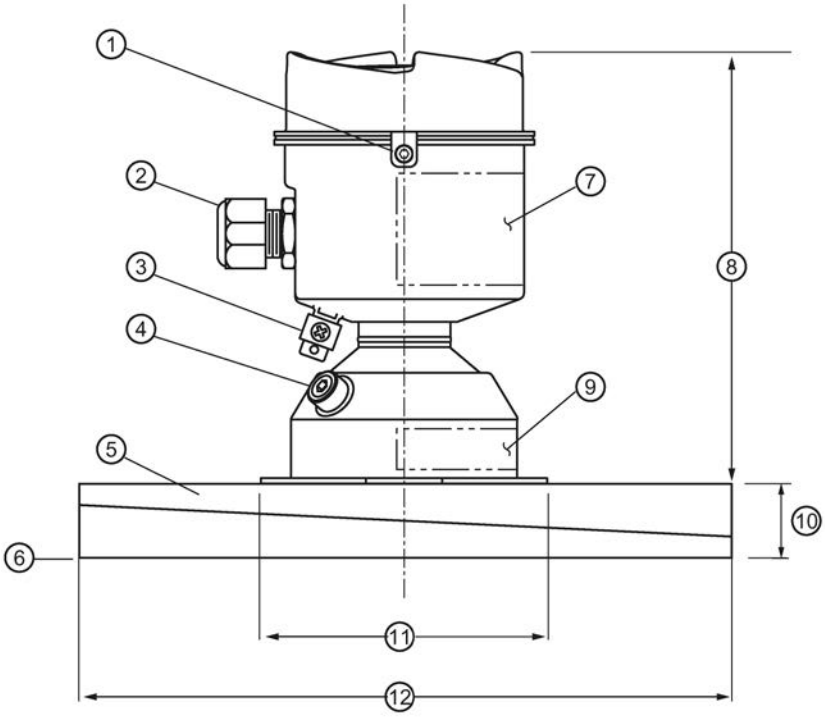

Dimensions are in mm (inch)

① lid lock
② cable gland[1)]
③ grounding lug
④ purge inlet
⑤ process connection, aimer flange
⑥ sensor reference point
⑦ device label
⑧ height: 166.1 (6.54)
⑨ pressure/temperature related information
⑩ thickness: 23.3 (0.92)
⑪ 110 (4.33)
⑫ flange OD: 200 (7.87)

[1)] Shipped with product, packed in a separate bag.

12.3 SITRANS LR560 with 4" and 6" aimer flange

Note

Bolt hole patterns and dimensions

Refer to Universal slotted flange (Page 153) for bolt hole patterns and dimensions.

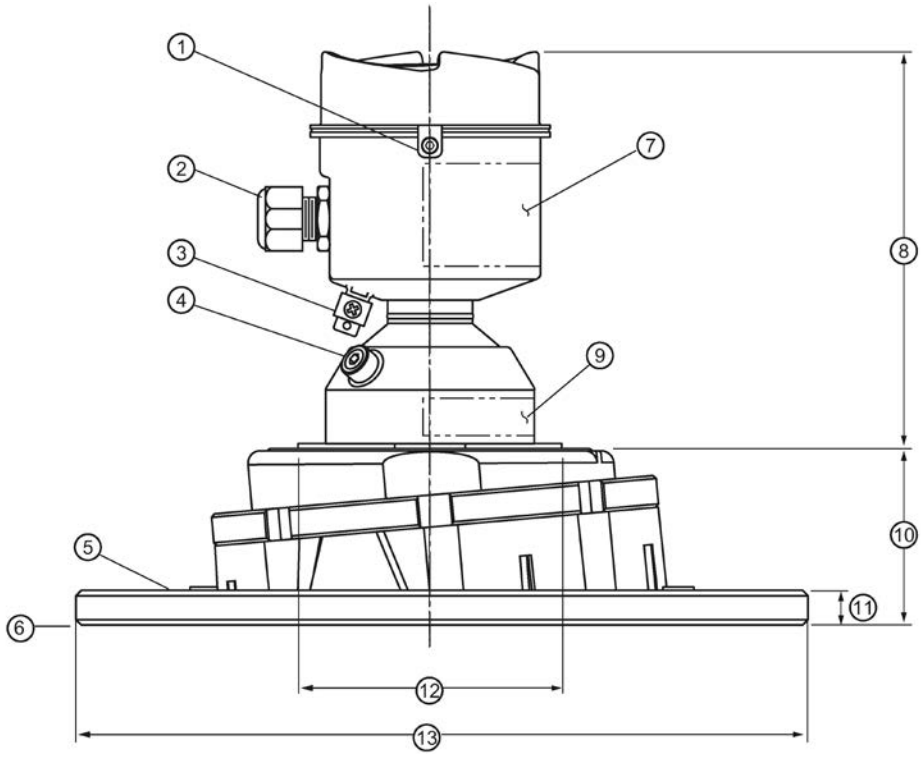

Dimensions are in mm (inch)

① lid lock

② cable gland[1)]

③ grounding lug

④ purge inlet

⑤ process connection: aimer flange

⑥ sensor reference point

⑦ device label

⑧ 166.1 (6.54)

⑨ pressure/temperature related information

⑩ 4": 53.2 (2.09)
6": 60.0 (2.36)

⑪ 9.6 (0.38)

⑫ 110 (4.33)

⑬ 4": 229 (9.02)
6": 285 (11.22)

[1)] Shipped with product, packed in a separate bag.

C Spanner

A C spanner, used to loosen the aimer locking ring, is shipped with the device, packed separately.

12.4 SITRANS LR560 with stamped flange

Note

Bolt hole patterns and dimensions

Refer to Stamped flange (Page 155) for bolt hole patterns and dimensions.

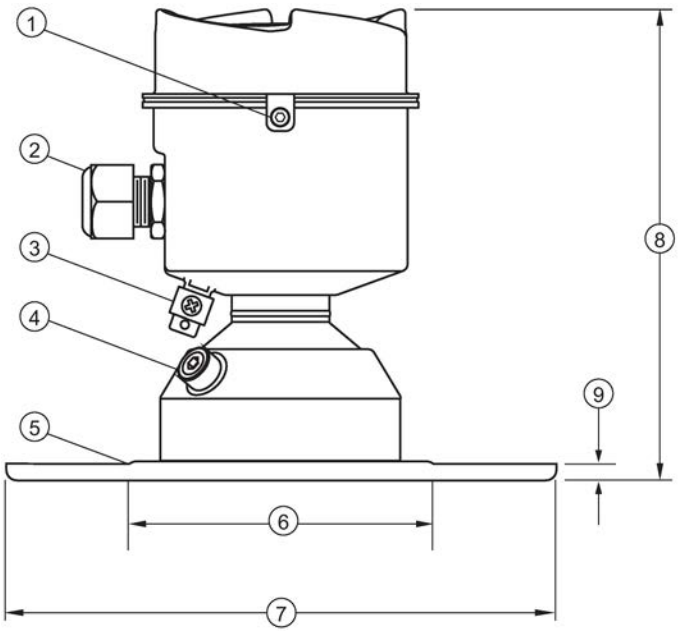

Dimensions in mm (inch)

① lid lock

② cable gland[1)]

③ grounding lug

④ purge inlet

⑤ process connection, stamped flange

⑥ 110 (4.33)

⑦ flange OD:
2": 200 (7.87)
3": 234 (9.21)
6": 290 (11.42)

⑧ height: 176 (6.93)

⑨ flange thickness: 6 (0.24)

[1)] Shipped with product, packed in a separate bag.

12.5 Universal slotted flange

Note

Bolting and gasket materials

The user is responsible for the selection of bolting and gasket materials which will fall within the limits of the flange and its intended use and which are suitable for the service conditions.

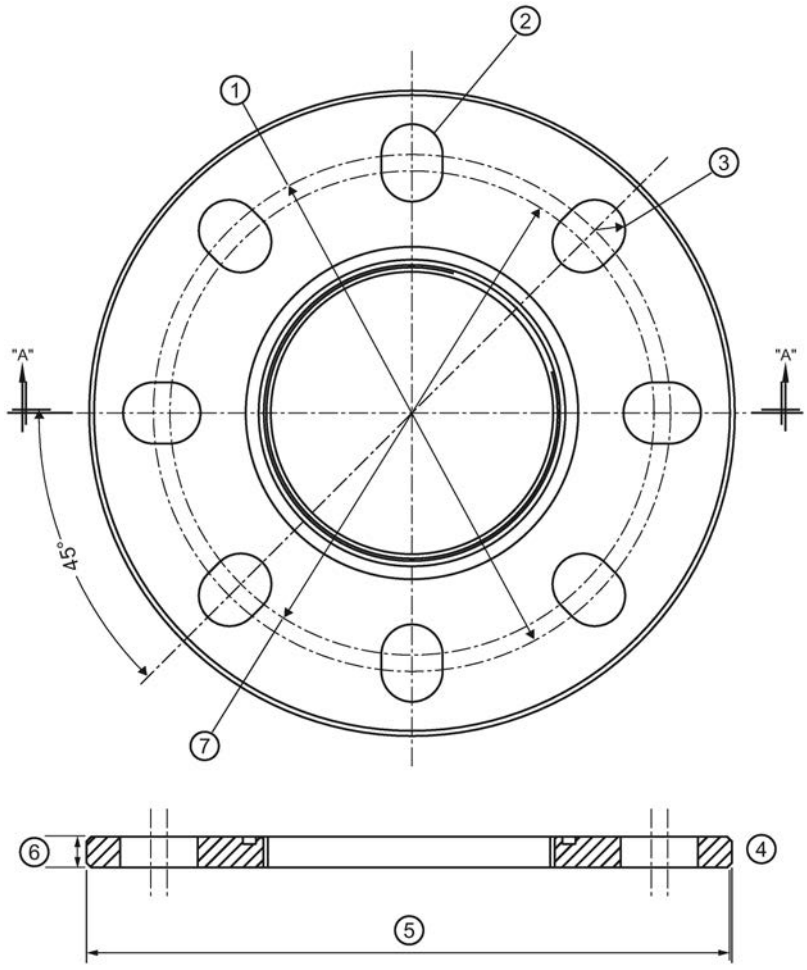

① bolt hole circle max. diameter
② number of slotted bolt holes
③ bolt hole radius
④ section A-A
⑤ flange O.D.
⑥ thickness
⑦ bolt hole circle min. diameter

Slotted flange dimensions and aimer[1)]

Pipe size	Flange O.D.	Thickness	Bolt hole circle max Ø	Bolt hole circle min Ø	Bolt hole radius	No. of slotted holes
3 (80)	7.87 (200)	0.38 (9.65)	6.30 (160)	5.91 (150)	0.37 (9.5)	8
4 (100)	9.00 (229)	0.38 (9.65)	7.52 (191)	6.89 (175)	0.37 (9.5)	8
6 (150)	11.22 (285)	0.38 (9.65)	9.53 (242)	9.45 (240)	0.45 (11.5)	8

Dimensions are in inch (mm)

[1)] Universal flange mates with EN 1092-1 (PN16)/ASME B16.5 (150 lb)/JIS 2220 (10K) bolt hole pattern.

12.6 Stamped flange

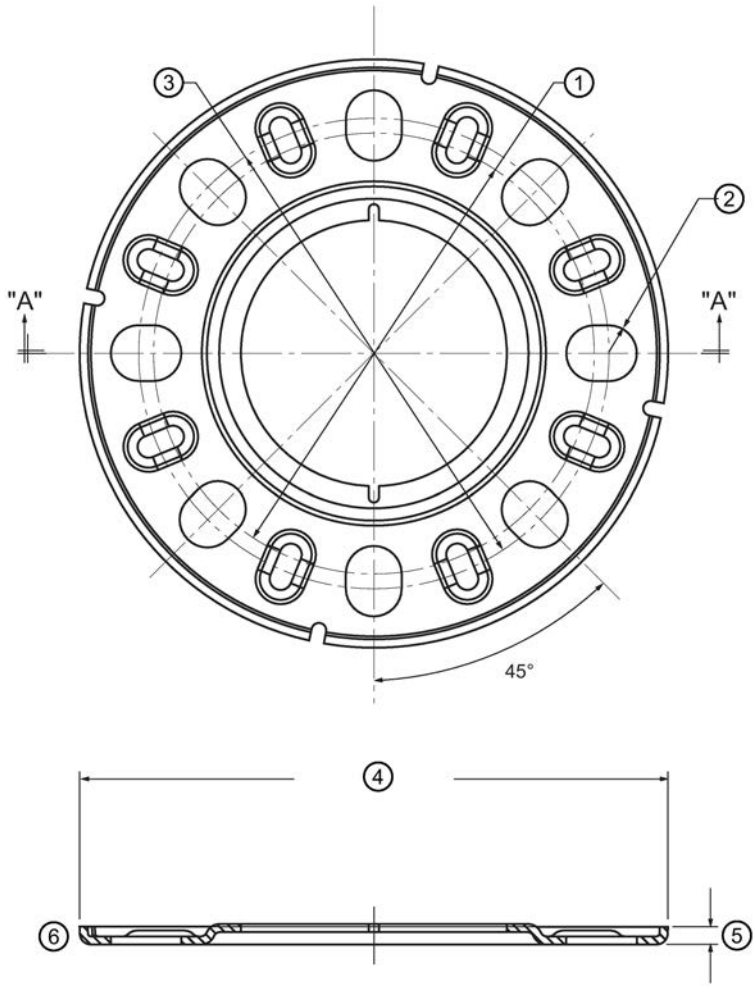

① bolt hole circle min. diameter
② bolt hole radius
③ bolt hole circle max. diameter
④ flange OD
⑤ thickness
⑥ section A-A

Stamped flange dimensions

Pipe size	Flange O.D.	Thickness	Bolt hole circle max Ø	Bolt hole circle min Ø	Bolt hole radius	No. of slotted holes
3 (80)	7.87 (200)	6.0 (0.24)	6.30 (160)	5.91 (150)	0.37 (9.5)	8
4 (100)	9.21 (234)	6.0 (0.24)	7.52 (191)	6.89 (175)	0.37 (9.5)	8
6 (150)	11.42 (290)	6.0 (0.24)	9.53 (242)	9.45 (240)	0.45 (11.5)	8

Dimensions in inch (mm)

12.7 Process connection label (pressure rated versions)

For pressure-rated versions only, the process connection label lists the following information:

Item	Sample Text	Comments/Explanation
CONNECTION SERIES	ASME B16.5 / EN 1092-1/ JIS B 2220	Flange Series: dimensional pattern based on ASME B16.5/EN 1092-1/JIS B 2 220 flange standards
NOM. PIPE SIZE (DN)	4 INCH / 100mm	Nominal Pipe Size: based on 150#/PN16/10K flange pressure classes
MAWP (PS)	3 BAR	Maximum Allowable Working Pressure at Design Temperature
DESIGN TEMP. (TS)	100 ºC	Maximum Allowable Working Temperature
MIN. PROCESS	3 BAR AT -40 ºC	Minimum Wetted Process Conditions
0F13589.5		Canadian Registration Number (CRN)
TEST PRESSURE (PT)	5.2 BAR	Production Test Pressure
TEST DATE	10/01/04	Date of Pressure Test (Year/Month/Day)
PROCESS SERIES	25785	Pressure Tag Family Series
WETTED NON-METALLIC	PEI	Sensor Lens Material
WETTED METALLICS	304L	Process Connection Material(s)
WETTED SEALS	FKM / VQM	Seal Material(s)

Technical reference

A

A.1 Principles of operation

SITRANS LR560 is a 2-wire, 78 GHz FMCW (Frequency Modulated Continuous Wave) radar level transmitter for continuous monitoring of solids and liquids in vessels to a range of 100 m (329 ft)[1]. Radar level measurement uses the time of flight principle to determine distance to a material surface.

FMCW radar transmits a continuous wave. The frequency of the wave is constantly increasing: this is known as the sweep. By the time the first part of the wave has been reflected off the target and returned to the device, the part of the wave that is just being emitted is at a higher frequency. The difference in frequency between the transmitted and received signals is proportional to time of flight.

Electromagnetic wave propagation is virtually unaffected by temperature or pressure changes, or by changes in the vapor levels inside a vessel. Electromagnetic waves are not attenuated by dust.

SITRANS LR560 consists of an enclosed electronic circuit coupled to an antenna and process connection. The electronic circuit generates a radar signal (78 GHz) that is directed to the lens antenna.

The signal is emitted from the lens antenna, and the reflected echoes are digitally converted to an echo profile. The profile is analyzed to determine the distance from the sensor reference point[2] to the material surface. This value (sensor value) is used as a basis for calculating the display of material level and mA output.

[1] The microwave output level is significantly less than that emitted from cellular phones.

[2] See Dimension drawings (Page 149)

A.2 Process variables

The Process Variables are sensor value and measured value. Sensor value is the distance from the sensor reference point (flange face) to the material surface. The measured value can be either Level (distance from low calibration point to material surface), Distance (distance from sensor reference point to the material surface), or Space (distance from high calibration point to the material surface).

A.3 Echo processing

A.3.1 Process Intelligence

The signal processing technology embedded in Siemens radar level devices is known as **Process Intelligence**.

Process intelligence provides high measurement reliability regardless of the dynamically changing conditions within the vessel being monitored. The embedded Process Intelligence dynamically adjusts to the constantly changing material surfaces within these vessels.

Process Intelligence is able to differentiate between the true microwave reflections from the surface of the material and unwanted reflections being returned from obstructions such as seam welds or supports within a vessel. The result is repeatable, fast and reliable measurement. This technology was developed as result of field data gained over some twenty years from more than 1,000,000 installations in many industries around the world.

Higher order mathematical techniques and algorithms are used to provide intelligent processing of microwave reflection profiles. This "knowledge based" technique produces superior performance and reliability.

A.3.2 Echo selection

Time Varying Threshold (TVT)

A Time Varying Threshold (TVT) hovers above the echo profile to screen out unwanted reflections (false echoes).

In most cases the material echo is the only one which rises above the default TVT.

In a vessel with obstructions, a false echo may occur, see SHAPER MODE (2.8.4.) (Page 161) for more details.

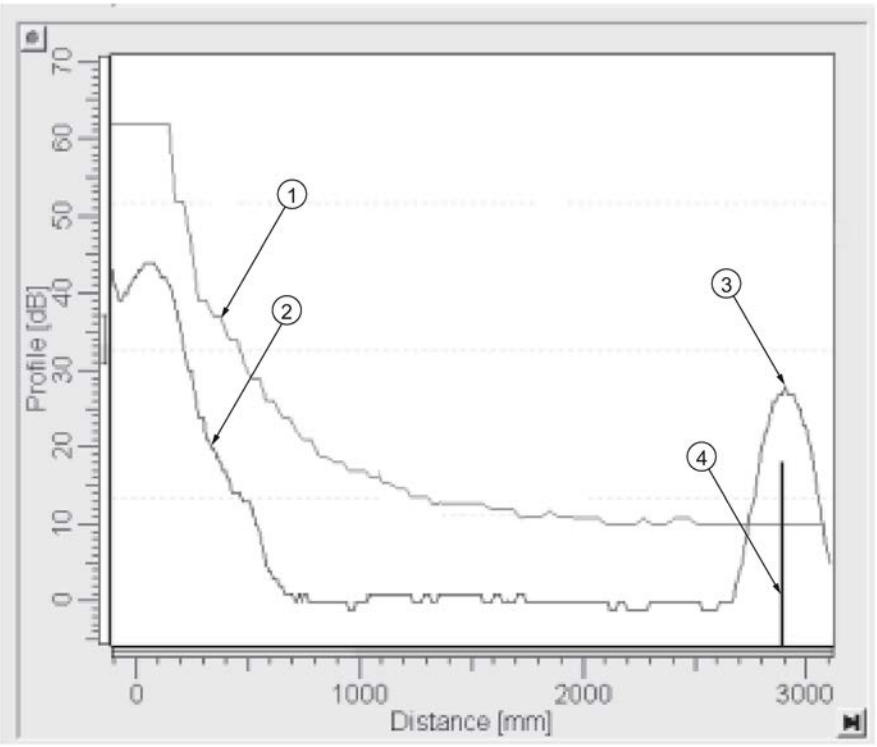

① default TVT
② echo profile
③ material level
④ echo marker

The device characterizes all echoes that rise above the TVT as potential good echoes. Each peak is assigned a rating based on its strength, area, height above the TVT, and reliability, amongst other characteristics.

ALGORITHM (2.7.3.1) (Page 109)

The true echo is selected based on the setting for the Echo selection algorithm. For a list of options, see ALGORITHM (2.7.3.1) (Page 109).

POSITION DETECT (2.7.3.3) (Page 109)

The echo position detection algorithm determines which point on the echo will be used to calculate the precise time of flight, and calculates the range using the calibrated propagation velocity. The following options are available:

Rising: Uses rising edge of the echo.

Center: Uses center of the echo.

Hybrid: Uses the Center algorithm for the top part of the vessel, and the CLEF algorithm for the part nearest the vessel bottom, according to the setting for **CLEF range**.

CLEF (Constrained Leading Edge Fit)

- Uses the leading edge of the echo.
- Is used mainly to process the echo from materials with a low dK value.

In an almost empty flat-bottomed vessel, a low dK material may reflect an echo weaker than the echo from the vessel bottom. The echo profile shows these echoes merging. The device may then report a material level equal to or lower than empty.

The CLEF algorithm enables the device to report the level correctly.

Example: CLEF off: Position set to Hybrid

Vessel height: 1.5 m; CLEF range set to 0 (Center algorithm gives the same result.)

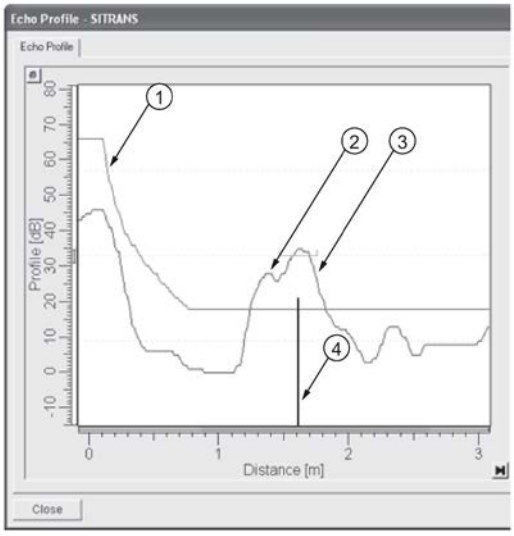

① default TVT
② material echo
③ vessel bottom echo selected
④ echo marker

Example: CLEF enabled

Vessel height: 1.5 m; CLEF range set to 0.5 m

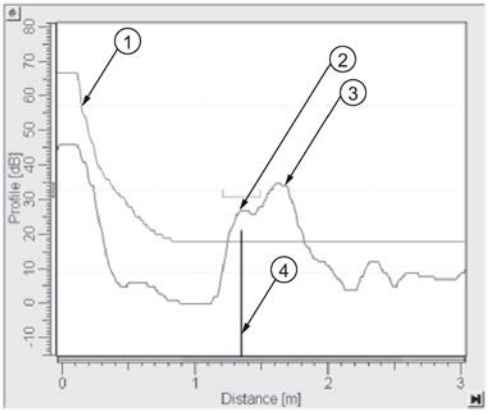

① default TVT
② material echo selected
③ vessel bottom echo
④ echo marker

A.3.3 CLEF RANGE (2.7.3.4.)

Determines the level below which the CLEF algorithm will be used. Above this level, the Center algorithm is used when Hybrid is selected in POSITION DETECT (2.7.3.3) (Page 109). CLEF Range is referenced from FAR RANGE (2.7.2.) (Page 108).

A.3.4 ECHO THRESHOLD (2.7.3.2.)

CONFIDENCE (2.7.6.1) (Page 112) describes the quality of an echo. Higher values represent higher quality. Echo Threshold defines the minimum confidence value required for an echo to be accepted as valid and evaluated.

A.3.5 ECHO LOCK (2.7.4.1.)

If the echo selected by ALGORITHM (2.7.3.1) (Page 109) is within the Echo Lock window, the window is centered about the echo, which is used to derive the measurement. In radar applications, two measurement verification options are used:

Lock Off

SITRANS LR560 responds immediately to a new selected echo (within the restrictions set by the Maximum Fill / Empty Rate), but measurement reliability is affected.

Material Agitator

A new measurement outside the Echo Lock Window must meet the sampling criteria before the window will move to include it.
The other available options, **Maximum Verification** and **Total Lock** are not recommended for radar.

A.3.6 SHAPER MODE (2.8.4.)

Note

For detailed instructions on using this feature via the handheld programmer, see SHAPER MODE (2.8.4) (Page 114).

Auto False Echo Suppression is designed to learn a specific environment (for example, a particular vessel with known obstructions), and in conjunction with Auto False Echo Suppression Range to remove false echoes appearing in front of the material echo.

The material level should be below all known obstructions at the moment when Auto False Echo Suppression learns the echo profile. Ideally the vessel should be empty or almost empty, and if an agitator is present, it should be running.

The device learns the echo profile over the whole measurement range and the TVT is shaped around all echoes present at that moment.

Auto False Echo Suppression Range

Auto False Echo Suppression Range specifies the range within which the learned TVT is applied. Default TVT is applied over the remainder of the range.

The learned TVT screens out the false echoes caused by obstructions. The default TVT allows the material echo to rise above it.

Auto False Echo Suppression Range must be set to a distance shorter than the distance to the material level when the environment was learned, to avoid the material echo being screened out.

Example before Auto False Echo Suppression

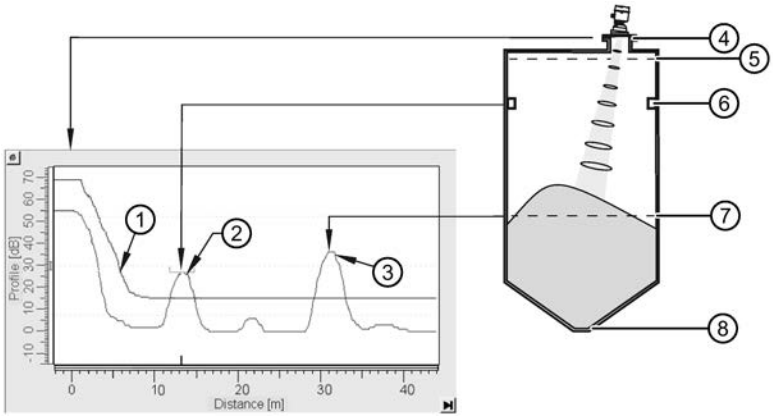

① default TVT
② false echo
③ material echo
④, sensor reference point
⑤ High Cal. Pt = 1 m
⑥ obstruction at 13 m
⑦ material level at 31 m
⑧ Low Cal. Pt. = 45 m

Example after Auto False Echo Suppression

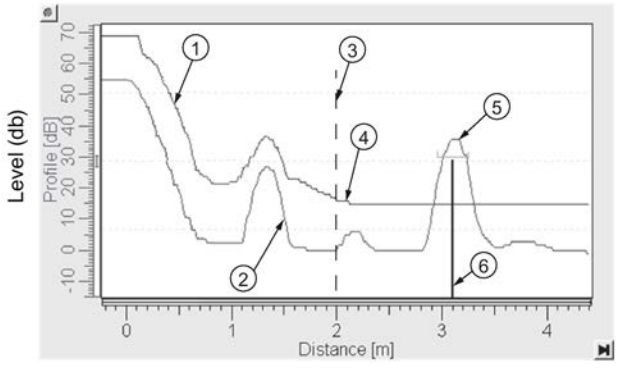

Auto False Echo Suppression Range set to 2 m

① Learned TVT
② False echo
③ Auto False Echo Suppression Range
④ Default TVT
⑤ Material echo
⑥ Echo marker

A.3.7 Measurement range

NEAR RANGE (2.7.1.) (Page 108)

Near Range programs SITRANS LR560 to ignore the zone in front of the antenna. The default blanking distance is 27.8 cm (0.91 ft) from the sensor reference point.

Near Range allows you to increase the blanking value from its factory default. But SHAPER MODE (2.8.4) (Page 114) is generally recommended in preference to extending the blanking distance from factory values.

FAR RANGE (2.7.2.) (Page 108)

Far Range can be used in applications where the base of the vessel is conical or parabolic. A reliable echo may be available below the vessel empty distance, due to an indirect reflection path.

Increasing Far Range to 30% or 40% can provide stable empty vessel readings.

A.3.8 Measurement response

Note

Units are defined in **Quick Start Wizard (1.1.)** and are in meters by default.

RESPONSE RATE (2.4.1.) (Page 102) limits the maximum rate at which the display and output respond to changes in the measurement. There are three preset options: slow, medium, and fast.

Once the real process fill/empty rate (m/s by default) is established, a response rate can be selected that is slightly higher than the application rate. Response Rate automatically adjusts the filters that affect the output response rate.

RESPONSE RATE (2.4.1.) (Page 102)		FILL RATE/MIN (2.4.2.) (Page 103)/EMPTY RATE/MIN (2.4.3.) (Page 103)	DAMPING FILTER (2.2.3.) (Page 101)
	Slow	0.1 m/min (0.32 ft/min)	600 s
Factory setting:	**Medium**	1.0 m/min (3.28 ft.min)	60 s
	Fast	10.0 m/min (32.8 ft/min)	0 s

A.3.9 Damping

DAMPING FILTER (2.2.3.) (Page 101) smooths out the response to a sudden change in level. This is an exponential filter and the engineering unit is always in seconds.

In 5 time constants the output rises exponentially: from 63.2% of the change in the first time constant, to almost 100% of the change by the end of the 5th time constant.

Damping example

time constant = 2 seconds

input (level) change = 2 m

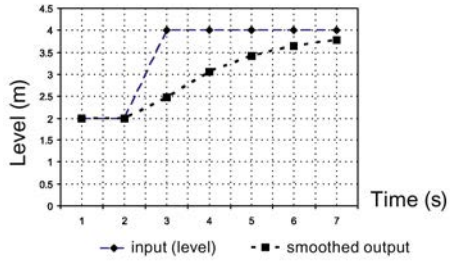

A.4 Analog output

The mA Output (current output) is proportional to material level in the range 4 to 20 mA. 0% and 100% are percentages of the full-scale reading (m, cm, mm, ft, in). Typically mA output is set so that 4 mA equals 0% and 20 mA equals 100%.

While the device is in **PROGRAM** mode, the output remains active and continues to respond to changes in the device.

SITRANS LR560 automatically returns to **Measurement** mode after a period of inactivity in **PROGRAM** mode.

A.4.1 Sensor Mode

This parameter controls the input. Depending on the reference point used, the measurement reports either Level, Space, or Distance. By default Sensor Mode is set to **Distance.**

Operation	Description	Reference point
LEVEL	Measurement from reference point to material surface	Low Calibration Point (process empty level)
SPACE	Measurement from reference point to material surface	High Calibration Point (process full level)
DISTANCE	Measurement from reference point to material surface	Sensor Reference Point

You also have the option to put the device out of service, in which case the device defaults to Fail-safe mode, and the reported level depends on the device type. A standard device reports the last valid reading, and a NAMUR NE 43-compliant device reports the user-defined value for Material Level (3.58 mA by default).

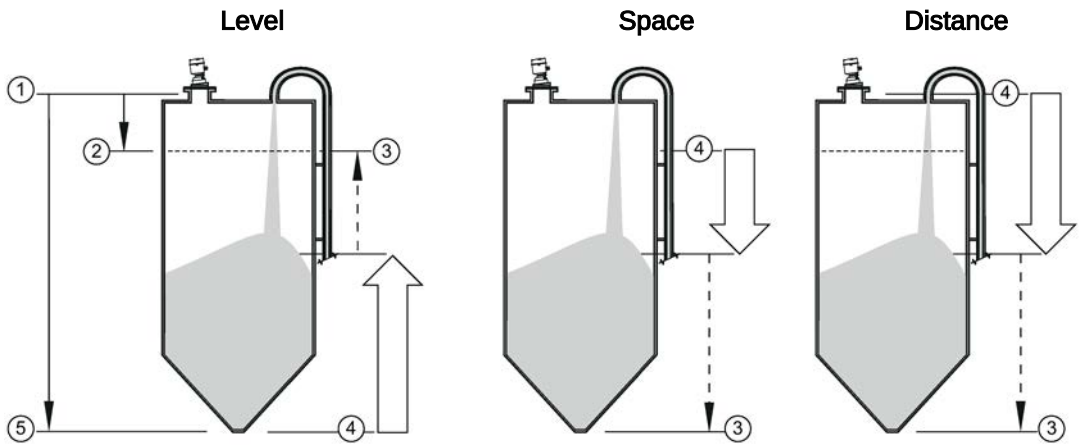

① sensor reference point

② high calibration point

③ 20 mA, 100%

④ 4 mA, 0%

⑤ low calibration point

A.4.2 Current Output Function

Current Output Function (2.6.1.) controls the mA output and applies any relevant scaling. By default it is set to **Distance**. Other options are Space and Level.

To view the mA reading in the secondary region of the LCD, press 5 on the handheld programmer.

A.4.3 Loss of Echo (LOE)

A loss of echo (LOE) occurs when the calculated measurement is judged to be unreliable because the echo confidence value has dropped below the echo confidence threshold.

CONFIDENCE (2.7.6.1) (Page 112) describes the quality of an echo. Higher values represent higher quality.

ECHO THRESHOLD (2.7.3.2) (Page 109) defines the minimum confidence value required for an echo to be accepted as valid and evaluated.

If the LOE condition persists beyond the time limit set in TIMER (2.5.2.) (Page 104) the LCD displays the Service Required icon, and the text region displays the fault code **S: 0** and the text LOE.

If two faults are present at the same time, the fault code, error text, and error icon for each fault are displayed alternately. For example, Loss of Echo and Fail-safe.

A.4.4 Fail-safe Mode

The purpose of the Fail-safe setting is to put the process into a safe mode of operation in the event of a fault or failure. The value to be reported in the event of a fault is selected so that a loss of power or loss of signal triggers the same response as an unsafe level.

TIMER (2.5.2.) (Page 104) determines the length of time a Loss of Echo (LOE) condition will persist before a Fail-safe state is activated. The default setting is 100 seconds.

MATERIAL LEVEL (2.5.1.) (Page 104) determines the material level to be reported when TIMER (2.5.2.) (Page 104) expires.

STANDARD DEVICE		
Options	HI	20.5 mA (max. mA Limit)
	LO	3.8 mA (min. mA Limit)
	HOLD Factory setting	Last valid reading
	VALUE	User-selected value defined in LEVEL (2.5.3.) (Page 104)

Upon receiving a reliable echo, the loss of echo condition is aborted, the Service Required icon and error message are cleared, and the reading and mA output return to the current material level.

A.5 Temperature De-Rating

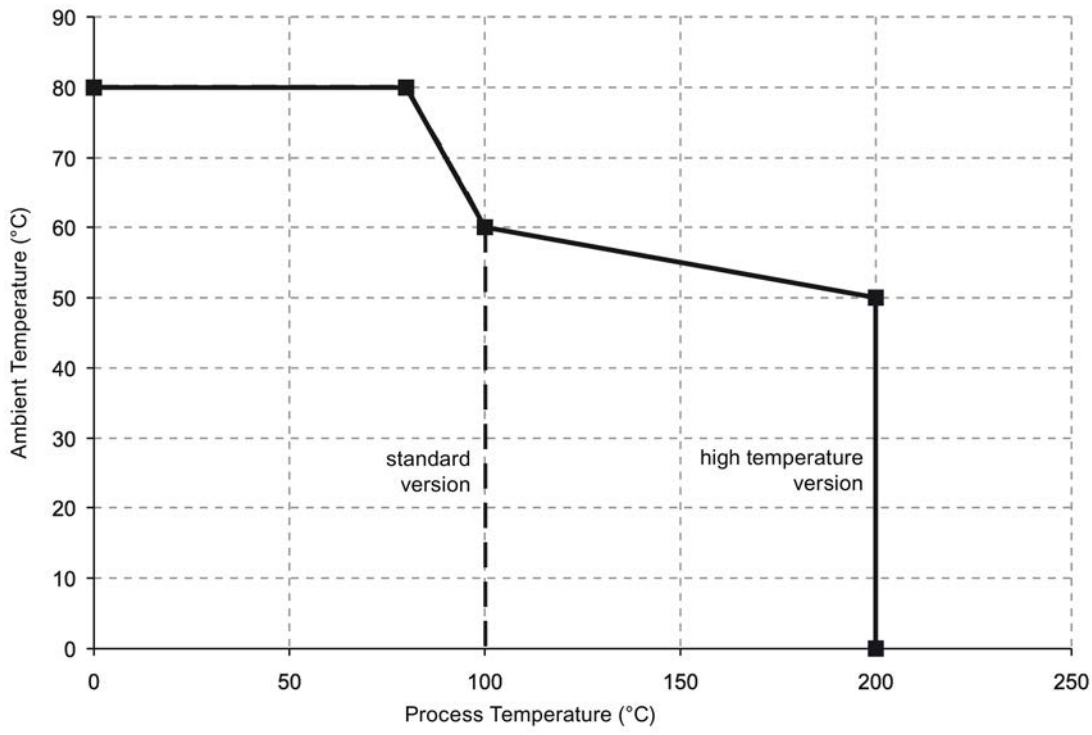

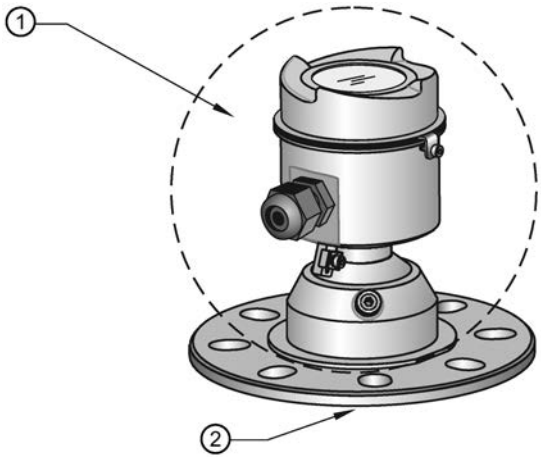

① ambient temperature
–40 °C to 80 °C
(–40 °F to 176 °F)

② process temperature:
–40 to +100 °C (–40 to +212 °F) or
–40 to +200 °C (–40 to +392 °F) depending on the version

A.6 Loop Power

A.6.1 Typical connection drawing

Note

Loop voltage is the voltage at the terminals of the power supply (not the voltage at the terminals of the device).

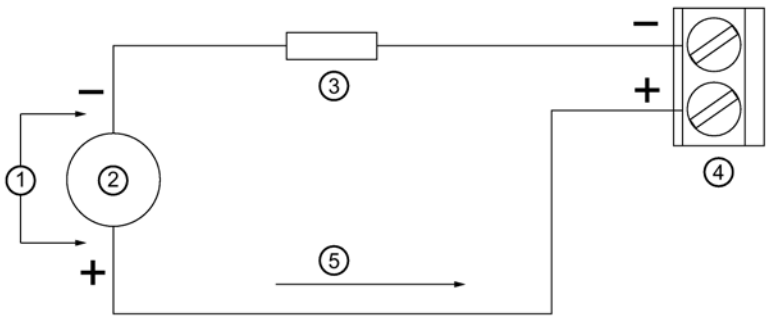

① Loop voltage
② Power supply
③ Loop resistance RL
④ SITRANS LR560
⑤ Loop current IL

A.6.2 Startup behavior

- The device draws less than 3.6 mA at startup.
- Time to first measurement is 60 seconds nominal.

A.6.3 Loop voltage versus loop resistance

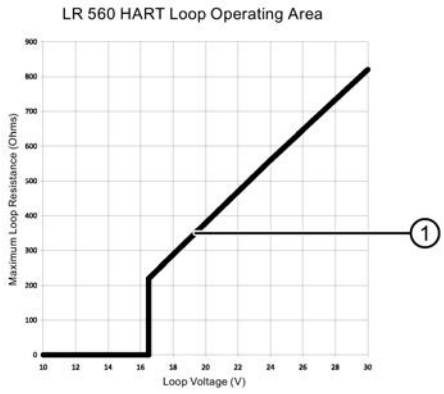

① Operation - with HART

HART communications

B

Highway Addressable Remote Transducer, HART, is an industrial protocol that is superimposed on the 4-20 mA signal. It is an open standard, and full details about HART can be obtained from the HART Communication Foundation website:

HART Communication Foundation (www.hartcomm.org)

The radar device can be configured over the HART network using either the HART Communicator 375 by Fisher-Rosemount, or a software package. The recommended software package is the SIMATIC Process Device Manager (PDM) by Siemens.

This device supports HART communication protocol. Signals are processed using Process Intelligence which has been field-proven in over 1,000,000 applications worldwide (ultrasonic and radar).

B.1 SIMATIC PDM

This software package is designed to permit easy configuration, monitoring, and troubleshooting of HART devices. The HART EDD for this device was written with SIMATIC PDM in mind and has been extensively tested with this software. For more information, see Operating via SIMATIC PDM (Page 50).

B.2 HART Electronic Device Description (EDD)

In order to configure a HART device, the configuration software requires the HART Electronic Device Description for the instrument in question.

You can download the HART EDD for this device from our website:

Product page (www.siemens.com/LR560)

Click on **Support>Software Downloads.** Older versions of the library will have to be updated in order to use all the features of this device.

B.3 HART Communicator 375 Menu Structure

Note

HART Communicator 375 is supported by SITRANS LR560 HART. The menu structure is aligned with the menu structure of SIMATIC PDM.

SITRANS LR560

1 Configure/Setup

- **1 Identification**
  - 1 Identification
    - 1 Long Tag
    - 2 Tag
    - 3 Descriptor
    - 4 Message
    - 5 Date
    - 6 Range Mode
  - 2 Device
    - 1 Manufacturer
    - 2 Product Name
    - 3 Order Number
    - 4 Final Assembly num
    - 5 Hardware Revision
    - 6 Firmware Revision
    - 7 Loader Revision
    - 8 EDD Version: xx.xx.xx-xx
  - 3 Device Status Icon
- **2 Wizard**
  - 1 Quick Start
    - 1 Step 1 - Identification
      - 1 Long tag
      - 2 Tag
      - 3 Descriptor
      - 4 Message
      - 5 Installation Date
      - 6 Order Number
      - 7 Range Mode
      - 8 Language
        - English
        - German
        - French
        - Spanish
        - Chinese

9 Device Image
2 Step 2 - Application
1 Application Type
Steel Silo
Concrete Silo
2 Operation
Level
Space
Distance
3 Step 3 - Ranges
1 Unit
2 Low Calibration Point (X)
3 High Calibration Point (Y)
4 Response Rate
5 Tank Image
4 Step 4 - Summary
1 Identification
1 Long Tag
2 Tag
3 Descriptor
4 Message
5 Installation Date
6 Order Number
7 Range Mode
8 Language
2 Application
1 Application Type
2 Operation
3 Ranges
1 Unit
2 Low Calibration Point
3 High Calibration Point
4 Response Rate
2 Configuration Flag Reset
1 Configuration Flag Reset
2 Device Status Icon
3 Operation
1 General
1 Select Analog Output
2 Master Reset
2 Simulation / Test

- 1 Self Test
- 2 Loop Test
- 3 Device Status Icon

4 Setup

- 1 Sensor
  - 1 General
    - 1 Unit
    - 2 Sensor Mode
    - 3 Damping filter
  - 2 Calibration
    - 1 Low Calibration Point (X)
    - 2 High Calibration Point (Y)
    - 3 Sensor Offset
  - 3 Rate
    - 1 Response Rate
    - 2 Fill Rate per Minute
    - 3 Empty Rate per Minute
  - 4 Fail-safe
    - 1 Material Level
    - 2 Timer
    - 3 Level
  - 5 Device Status Icon
- 2 Analog Output Scaling
  - 1 Current Output Function
  - 2 Start of Scale (=4 mA)
  - 3 Full Scale (=20 mA)
  - 4 Control Range: Lower Limit
  - 5 Control Range: Upper Limit
  - 6 Device Status Icon
- 3 Signal Processing
  - 1 General
    - 1 Range
      - 1 Near Range
      - 2 Far Range
    - 2 Echo Select
      - 1 Algorithm
      - 2 Position Detect
      - 3 Echo Threshold
      - 4 CLEF Range
      - 5 Echo Marker
    - 3 Sampling

- 1 Echo Lock
- 2 Sampling Up
- 3 Sampling Down
- 4. Echo Lock Window

4 Echo Quality

- 1 Confidence
- 2 Echo Strength

5 Filtering

- 1 Narrow Echo Filter
- 2 Reform Echo

6 Device Status Icon

2 TVT

1 TVT Setup

- 1 Auto False EchoSuppression
- 2 Auto False EchoSuppression Range
- 3 Hover Level
- 4 Shaper Mode
- 5 Device Status Icon

4 Local Display

- 1 Language
- 2 LCD Contrast
- 3 LCD Backlight
- 4 Device Status Icon

5 Maintenance & Diagnostics

1 Remaining Device Lifetime

- 1 Lifetime (Expected)
- 2 Remaining Lifetime
- 3 Time in Operation
- 4 Activation of Reminders
- 5 Reminder 1 before Lifetime (Required)
- 6 Reminder 2 before Lifetime (Demanded)
- 7 Snooze for 1 Year
- 8 Device Status Icon

2 Remaining Sensor Lifetime

1 Lifetime (Expected)
2 Time in Operation
3 Remaining Lifetime
4 Activation of Reminders
5 Reminder 1 before Lifetime (Required)
6 Reminder 2 before Lifetime (Demanded)
7 Sensor Replaced
8 Snooze for 1 Year
9 Device Status Icon

3 Service Schedule
1 Service Interval
2 Time Since Last Service
3 Time Until Next Service
4 Activation of Reminders
5 Reminder 1 before Service (Required)
6 Reminder 2 before Service (Demanded)
7 Service Performed
8 Device Status Icon

4 Calibration Schedule
1 Calibration Interval
2 Time Since Last Calibration
3 Time Until Next Calibration
4 Activation of Reminders
5 Reminder 1 before Calibration (Required)
6 Reminder 2 before Calibration (Demanded)
7 Calibration Performed
8 Device Status Icon

5 Electronic Temperature
1 Electronics Temperature
2 Lowest Value
3 Highest Value
4 Device Status Icon

6 Wear
1 Time in Operation
2 Poweron Resets
3 Device Status Icon

6 Communication

1 Manufacturer
2 Dev ID
3 Product Name
4 Fld dev rev
5 EDD Revision 1
6 Universal Command Revision
7 Device Status Icon

7 Security

1 Remote Access
1 Write Protection
2 Local Access
1 Local Operation Enable
3 Device Status Icon

2 Device Diagnostics

1 Device Status
1 Device status
2 Device Status Icon
2 HW/FW-Status
1 Status group 0
2 Status group 1
3 Status group 2
4 Status group 3
5 Status group 4
6 Status group 5
7 Status group 14
8 Device Status Icon

3 Process Variables

1 Values
1 Primary
2 PV: Distance
3 Secondary
4 SV: Distance
5 Device Status Icon
2 Analog Output
1 Distance Range [%]
2 Analog Output [mA]
3 Device Status Icon
3 Trend View
1 Trend Values
1 Primary
2 Secondary

2 Trend View

3 Device Status Icon

B.4 HART version

SITRANS LR560 conforms to HART rev. 6.

B.4.1 Burst Mode

SITRANS LR560 does not support burst mode.

B.4.2 HART Multidrop Mode

HART Multidrop Mode allows the connection of multiple field devices via HART. Details on the use of Multidrop Mode are outlined in an application guide Working with HART, which can be downloaded from the product page of our website (www.siemens.com/LR560). Go to **Support** and click on **Application Guides**.

Certificates and Support

C

C.1 Technical support

Technical support

If this documentation does not provide complete answers to any technical questions you may have, contact Technical Support at:

- Support request (http://www.siemens.com/automation/support-request)
- More information about our Technical Support is available at Technical Support (http://www.siemens.com/automation/csi/service)

Internet Service & Support

In addition to our documentation, Siemens provides a comprehensive support solution at:

- Services & Support (http://www.siemens.com/automation/service&support)

Personal contact

If you have additional questions about the device, please contact your Siemens personal contact at:

- Partner (http://www.automation.siemens.com/partner)

To find the personal contact for your product, go to "All Products and Branches" and select "Products & Services > Industrial Automation > Process Instrumentation".

Registered business address: Siemens AG, DE-76181, Karlsruhe, Germany

Documentation

You can find documentation on various products and systems at:

- Instructions and manuals (http://www.siemens.com/processinstrumentation/documentation)

C.2 QR code label

A QR code label can be found on the device. With the use of a smart phone, the QR code provides a direct link to a website with information specific to the device, such as manuals, FAQs, certificates, etc.

C.3 Certificates

You can find certificates on the Internet at LR560 (www.siemens.com/LR560) or on an included DVD.

HMI menu structure

D

D.1 HMI menu

1. WIZARDS
    - 1.1. QUICK START WIZ.
        - VESSEL
        - RESPONSE RATE
        - UNITS
        - OPERATION
        - LOW CALIB. PT.
        - HIGH CALIB. PT.
    - 1.2. AFES WIZ.
    - 1.3. CPY PARAMETERS TO DISP
    - 1.4. CPY PARAMETERS FROM DISPLAY
    - 1.5. CPY FIRMWARE TO DISPLAY
    - 1.6. CPY FIRMWARE FROM DISPLAY

2. SETUP
    - 2.1. DEVICE
        - 2.1.1. LONG TAG
        - 2.1.2. TAG
        - 2.1.3. DESCRIPTOR
        - 2.1.4. MESSAGE
        - 2.1.5. INSTAL. DATE
        - 2.1.6. HARDWARE REV.
        - 2.1.7. FIRMWARE REV.
        - 2.1.8. LOADER REV.
        - 2.1.9. MENU TIMEOUT
        - 2.1.10. MANUF. DATE
    - 2.2. SENSOR
        - 2.2.1. UNITS
        - 2.2.2. SENSOR MODE
        - 2.2.3. DAMPING FILTER
        - 2.2.4. TEMP. UNITS
        - 2.2.5. UNIT
    - 2.3. CALIBRATION

2.3.1. LOW CALIB. PT.
2.3.2. HIGH CALIB. PT.
2.3.3. SENSOR OFFSET
2.4. RATE
2.4.1. RESPONSE RATE
2.4.2. FILL RATE PER MINUTE
2.4.3. EMPTY RATE PER MINUTE
2.5. FAIL-SAFE
2.5.1. MAT. LEV.
2.5.2. TIMER
2.5.3. LEVEL
2.6. ANALOG OUTPUT SCALE
2.6.1. CURRENT OUTPUT FUNCTION
2.6.2. 4 MA SETPOINT
2.6.3. 20 MA SETPOINT
2.6.4. MIN. MA LIMIT
2.6.5. MAX. MA LIMIT
2.6.6. MA OUTPUT MODE
2.6.7. MANUAL VALUE
2.6.8. MA OUTPUT VALUE
2.7. SIGNAL PROCESSING
2.7.1. NEAR RANGE
2.7.2. FAR RANGE
2.7.3. ECHO SELECT
2.7.3.1. ALGORITHM
2.7.3.2. ECHO THRESHOLD
2.7.3.3. POSITION DETECT
2.7.3.4. CLEF RANGE
2.7.3.5. ECHO MARKER
2.7.4. SAMPLING
2.7.4.1. ECHO LOCK
2.7.4.2. UP SAMP.
2.7.4.3. DOWN SAMP.
2.7.4.4. ECHO LOCK WINDOW
2.7.5. FILTERING
2.7.5.1. NARROW ECHO FILTER
2.7.5.2. REFORM ECHO
2.7.5.3. AVG AMOUNT
2.7.6. ECHO QUALITY
2.7.6.1. CONFIDENCE
2.7.6.2. ECHO STRENGTH

2.8. TVT SETUP

2.8.1. AUTO ECHO SUPP.

2.8.2. AUTO SUPP. RANGE

2.8.3. HOVER LEVEL

2.8.4. SHAPER MODE

2.9. TVT SHAPER

2.9.1. BREAKPOINT 1-9

2.9.2. BREAKPOINT 10-18

2.9.3. BREAKPOINT 19-27

2.9.4. BREAKPOINT 28-36

2.9.5. BREAKPOINT 37-45

2.9.6. BREAKPOINT 46-54

2.9.7. BREAKPOINT 55-63

2.9.8. BREAKPOINT 64-72

2.9.9. BREAKPOINT 73-81

2.9.10. BREAKPOINT 82-90

2.9.11. BREAKPOINT 91-99

2.9.12. BREAKPOINT 100-108

2.9.13. BREAKPOINT 109-117

2.9.14. BREAKPOINT 118-120

2.10. MEASURED VALUES

2.10.1. MAIN OUTPUT

2.10.2. O/P NO LINEAR

2.10.3. O/P NO OFFSETS

3. DIAGNOSTICS

3.1. FAULT RESET

3.2. ECHO PROFILE

3.3. TREND

3.4. PEAK VALUES

3.4.1. MIN MEAS. VALUE

3.4.2. MAX MEAS. VALUE

3.4.3. MINIMUM PV

3.4.4. MAXIMUM PV

3.4.5. MINIMUM SV

3.4.6. MAXIMUM SV

3.5. ELECT TEMP

3.5.1. MIN. VALUE

3.5.2. MAX. VALUE

3.5.3. INTERN. TEMP

3.6. REMAIN. DEV. LIFE

3.6.1. TIME IN OPER.
3.6.2. REMAIN. LIFETIME
3.6.3. REMIND. 1 (REQ.)
3.6.4. REMIND. 2 (DEM.)
3.6.5. REMINDER ACTIVATION
3.6.6. LIFETIME EXPECTED
3.6.7. MAINT. STAT.
3.6.8. ACK. STATUS
3.6.9. ACK.

3.7. REMAIN. SENS LIFE
3.7.1. TIME IN OPER.
3.7.2. REMAIN. LIFETIME
3.7.3. REMIND. 1 (REQ.)
3.7.4. REMIND. 2 (DEM.)
3.7.5. REMINDER ACTIVATION
3.7.6. LIFETIME EXPECTED
3.7.7. MAINT. STAT.
3.7.8. ACK. STATUS
3.7.9. ACK.

4. SERVICE
4.1. DEMO MODE
4.2. MASTER RESET
4.3. POWERED HOURS
4.4. POWERON RESETS
4.5. LCD BACKLIGHT
4.6. LCD CONTRAST
4.7. SERVICE SCHEDULE
4.7.1. TIME LAST SERV.
4.7.2. TIME NEXT SERV.
4.7.3. REMIND. 1 (REQ.)
4.7.4. REMIND. 2 (DEM.)
4.7.5. REMINDER ACTIVATION
4.7.6. SERVICE INTERVAL
4.7.7. MAINT. STAT.
4.7.8. ACK. STATUS
4.7.9. ACK.

4.8. CALIB. SCHEDULE
4.8.1. TIME LAST CALIB.
4.8.2. TIME NEXT CALIB.
4.8.3. REMIND. 1 (REQ.)

4.8.4. REMIND 2 (DEM.)
4.8.5. REMINDER ACTIVATION
4.8.6. CALIB. INTERVAL
4.8.7. MAINT. STATUS
4.8.8. ACK. STATUS
4.8.9. ACK.
4.9. STORED SW VER.

5. COMMUNICATION
5.1 DEVICE ADDRESS
5.2 REMOTE LOCKOUT

6. SECURITY
6.1 WRITE PROTECTION
7. LANGUAGE

List of abbreviations

E

E.1 List of abbreviations

Short form	Long form	Description	Units
CE / FM / CSA	Conformité Européenne / Factory Mutual / Canadian Standards Association	safety approval	
DCS	Distributed Control System	control room apparatus	
dK	dielectric constant		
EDD	Electronic Device Description		
ESD	Electrostatic Discharge		
FMCW	Frequency Modulated Continuous Wave	radar principle	
HART	Highway Addressable Remote Transducer		
HMI	Human Machine Interface		
I_i	Input current		mA
I_o	Output current		mA
IS	Intrinsically Safe	safety approval	
LCD	Liquid Crystal Display		
µs	microsecond	10^{-6}	s
PA	Process Automation (PROFIBUS)		
PED	Pressure Equipment Directive	safety approval	
ppm	parts per million		
PV	Primary Variable	measured value	
SELV	Safety extra low voltage		
SV	Secondary Value	equivalent value	
TB	Transducer Block		
TVT	Time Varying Threshold	sensitivity threshold	
U_i	Input voltage		V
U_o	Output voltage		V

Glossary

accuracy

degree of conformity of a measure to a standard or a true value.

algorithm

a prescribed set of well-defined rules or processes for the solution of a problem in a finite number of steps.

ambient temperature

the temperature of the surrounding air that comes in contact with the enclosure of the device.

antenna

an aerial which sends out and receives a signal in a specific direction. There are four basic types of antenna in radar level measurement, horn, parabolic, rod, and waveguide.

Auto False-Echo Suppression

a technique used to adjust the level of a TVT to avoid the reading of false echoes. (See TVT.)

Auto-False Echo Suppression Range

defines the endpoint of the learned TVT distance. This is used in conjunction with auto false echo suppression.

beam angle

the angle diametrically subtended by the on-half power limits (-3 dB) of the microwave beam.

beam spreading

the divergence of a beam as it travels through a medium.

blanking

a blind zone extending away from the reference point plus any additional shield length.The device is programmed to ignore this zone.

capacitance

the property of a system of conductors and dielectrics that permits the storage of electricity when potential differences exist between the conductors. Its value is expressed as the ratio of a quantity of electricity to a potential difference, and the unit is a Farad.

confidence

see Echo Confidence.

damping

term applied to the performance of a device to denote the manner in which the measurement settles to its steady indication after a change in the value of the level.

dB (decibel)

a unit used to measure the amplitude of signals.

derating

to decrease a rating suitable for normal conditions according to guidelines specified for different conditions.

dielectric

a nonconductor of direct electric current. Many conductive liquids/electrolytes exhibit dielectric properties; the relative dielectric constant of water is 80.

dielectric constant (dK)

the ability of a dielectric to store electrical potential energy under the influence of an electric field. Also known as Relative Permittivity. An increase in the
dielectric constant is directly proportional to an increase in signal amplitude. The value is usually given relative to a vacuum /dry air: the dielectric constant of air is 1.

echo

a signal that has been reflected with sufficient magnitude and delay to be perceived in some manner as a signal distinct from that directly transmitted. Echoes are frequently measured in decibels relative to the directly transmitted signal.

Echo Confidence

describes the quality of an echo. Higher values represent higher quality. Echo Threshold defines the minimum value required for an echo to be accepted as valid and evaluated.

Echo Lock Window

a window centered on an echo in order to locate and display the echo's position and true reading. Echoes outside the window are not immediately processed.

Echo Marker

a marker that points to the processed echo.

Echo Processing

the process by which the radar unit determines echoes.

Echo Profile

a graphical display of a processed echo.

Echo Strength

describes the strength of the selected echo in dB referred to 1 µV rms.

false echo

any echo which is not the echo from the desired target. Generally, false echoes are created by vessel obstructions.

frequency

the number of periods occurring per unit time. Frequency may be stated in cycles per second.

HART

Highway **A**ddressable **R**emote **T**ransducer. An open communication protocol used to address field instruments.

Hertz (Hz):

unit of frequency, one cycle per second. 1 Gigahertz (GHz) is equal to 10^9 Hz.

inductance

the property of an electric circuit by virtue of which a varying current induces an electromotive force in that circuit or in a neighboring circuit. The unit is a Henry.

local display interface (LDI)

the removable LCD display with push buttons

microwaves

the term for the electromagnetic frequencies occupying the portion of the radio frequency spectrum from 1 GHz to 300 GHz.

Near Blanking

see Blanking.

nozzle

a length of pipe mounted onto a vessel that supports the flange.

parameters

in programming, variables that are given constant values for specific purposes or processes.

polarization

the property of a radiated electromagnetic wave describing the time-varying direction and amplitude of the electric field vector.

polarization error

the error arising from the transmission or reception of an electromagnetic wave having a polarization other than that intended for the system.

pulse radar

a radar type that directly measures distance using short microwave pulses. Distance is determined by the return transit time.

radar

radar is an acronym for **RA**dio **D**etection **A**nd **R**anging. A device that radiates electromagnetic waves and utilizes the reflection of such waves from distant objects to determine their existence or position.

range

distance between a transmitter and a target.

range extension

the distance below the zero percent or empty point in a vessel.

repeatability

the closeness of agreement among repeated measurements of the same variable under the same conditions.

shot

one transmit pulse or measurement.

TVT (Time Varying Threshold)

a time-varying curve that determines the threshold level above which echoes are determined to be valid.

Index

A

Abbreviations and identifications list, 184
Activating, 36
AMS Device Manager
    features, 68
analog output
    select, 63
    simulate via PDM, 63
Analog output, 164
Approvals
    hazardous area, 147
    radio, 147
Auto False Echo Suppression
    setup, 113
    TVT Shaper adjustment, 58
    via PDM, 59, 60

B

Blanking (see Near Range), 163

C

calibration schedules via PDM, 62
Certificates, 14, 178
Cleaning, 133
CLEF (Constrained Leading Edge Fit)
    explanation, 159
Compact Operating Instructions, 177
configuration
    new device via AMS, 69
    Quick Start via local display, 45
configuration flag reset, 64
Customer Support, (Refer to Technical support)

D

Damping
    explanation, 164
Damping filter
    setup, 101
data logging
    time-based echo profile storage, 59
Device Address
    setting via LUI, 49
Device Description (DD)
    see EDD, 50
device status
    view via PDM, 66
Device Status
    icons, 138
Disassembly, 27
Disposal, 137
Documentation, 177

E

echo processing
    Process Intelligence, 157
Echo Profile
    data logging, 59
    view via loca display, 48
    view via PDM, 59
Echo Profile Utilities
    Auto False Echo Suppression, 58
    Echo Profile, 58
    TVT Shaper, 58
echo selection
    Algorithm, 159
    CLEF (Constrained Leading Edge Fit), 159
    Position algorithm, 159
Echo selection
    time varying threshold (TVT), 158
Echo Setup
    quick access via PDM, 62
EDD
    updating, 50
Electronic Device Description (EDD)
    required for PROFIBUS PA, 50
    updating, 50

F

Fail-safe Mode
    explanation, 166
Fail-safe Timer
    explanation, 166
Far Range
    explanation, 163

H

HART Communication
set preambles, 65
HART Communications
details, 169
Hazardous area
Laws and directives, 14
Qualified personnel, 16
Hotline, (Refer to Support request)

I

Identifications and abbreviations
list, 184
Instructions and manuals, 177

L

Language, 131
Laws and directives
Disassembly, 14
Personell, 14
LCD display
echo profile viewing, 48
Lithium batteries
Return, 136
Safety, 40
LOE
Fail-safe Mode, 166
loop test
simulate analog output, 64
loss of echo (LOE)
explanation, 165

M

mA output
select analog output, 63
maintenance
calibration schedules, 63
service schedules, 63
Maintenance, 132
Manuals, 177
Master Reset
factory defaults via AMS, 69
measurement range
blanking via Near Range, 163
extension via Far Range, 163
Measurement Response
explanation, 163
Modifications
correct usage, 13
improper, 13
Mounting
beam angle, 23
nozzle location, 23

N

Near Range
explanation, 163
Nozzle location
Shaper Mode, 23

O

Operating Instructions, 177
operating principles, 157
Overview, 18

P

password protection
via AMS, 85
PDM
see SIMATIC PDM, 50
power source
requirements, 29
Process Intelligence, 157
programmer
handheld, 39
programming
adjust parameters via PDM, 56
via the handheld programmer, 42

Q

QR code label, 177
Qualified personnel, 16
Quick Start Wizard
via local display, 45
via SIMATIC PDM, 52

R

Reading erratic
troubleshooting, 142
Reading incorrect
troubleshooting, 143
Reading response slow, 142

Response Rate
explanation, 163
Return procedure, 136

S

Scan device
synchronize parameters via AMS, 70
Scope of delivery, 11
security
password protection via AMS, 85
Security
local access control via AMS, 83
remote access control via AMS, 83
self-test
device self-test via PDM, 63
Service, 177
Service & Support, 177
Internet, 177
service schedules via PDM, 62
settings
adjust parameters via PDM, 56
SIMATIC PDM
functions and features, 50
simulate analog output
loop test, 64
SITRANS LR560
FMCW, 157
operating principles, 157
startup
transition screen, 36
Support, 177
Support request, 177
synchronize parameters
scan device via AMS, 70

T

Technical data, 144
air purge connection, 145
ambient temperature, 145
enclosure, 145
environmental, 145
lens antenna material, 145
process connections, 145
process temperature, 146, 146
weight, 145
Technical support, 177
Partner, 177
Personal contact, 177
test
loop test, 64
Test certificates, 14
trend
view trend line, 66
troubleshooting
communication, 143
Troubleshooting
operation, 142
TVT (time varying threshold)
explanation, 158
TVT Shaper
manual adjustment via PDM, 58
via PDM, 58

W

Warranty, 11
wear
view via PDM, 64