SIEMENS

SITRANS L

Radar transmitters
SITRANS Probe LR with mA/HART

Operating Instructions

7ML5430 (SITRANS Probe LR with mA/HART)

Introduction 1

Safety notes 2

Description 3

Installing/mounting 4

Connecting 5

Commissioning 6

Parameter assignment 7

Service and maintenance 8

Troubleshooting 9

Technical data 10

Dimension drawing 11

Technical reference A

HART communication B

Application examples C

Hazardous area installations D

Certificates and support E

05/2019

A5E32337711-AC

Legal information

Warning notice system

This manual contains notices you have to observe in order to ensure your personal safety, as well as to prevent damage to property. The notices referring to your personal safety are highlighted in the manual by a safety alert symbol, notices referring only to property damage have no safety alert symbol. These notices shown below are graded according to the degree of danger.

⚠ DANGER
indicates that death or severe personal injury **will** result if proper precautions are not taken.

⚠ WARNING
indicates that death or severe personal injury **may** result if proper precautions are not taken.

⚠ CAUTION
indicates that minor personal injury can result if proper precautions are not taken.

NOTICE
indicates that property damage can result if proper precautions are not taken.

If more than one degree of danger is present, the warning notice representing the highest degree of danger will be used. A notice warning of injury to persons with a safety alert symbol may also include a warning relating to property damage.

Qualified Personnel

The product/system described in this documentation may be operated only by **personnel qualified** for the specific task in accordance with the relevant documentation, in particular its warning notices and safety instructions. Qualified personnel are those who, based on their training and experience, are capable of identifying risks and avoiding potential hazards when working with these products/systems.

Proper use of Siemens products

Note the following:

⚠ WARNING
Siemens products may only be used for the applications described in the catalog and in the relevant technical documentation. If products and components from other manufacturers are used, these must be recommended or approved by Siemens. Proper transport, storage, installation, assembly, commissioning, operation and maintenance are required to ensure that the products operate safely and without any problems. The permissible ambient conditions must be complied with. The information in the relevant documentation must be observed.

Trademarks

All names identified by ® are registered trademarks of Siemens AG. The remaining trademarks in this publication may be trademarks whose use by third parties for their own purposes could violate the rights of the owner.

Disclaimer of Liability

We have reviewed the contents of this publication to ensure consistency with the hardware and software described. Since variance cannot be precluded entirely, we cannot guarantee full consistency. However, the information in this publication is reviewed regularly and any necessary corrections are included in subsequent editions.

Siemens AG
Division Process Industries and Drives
Postfach 48 48
90026 NÜRNBERG
GERMANY

Document order number: A5E32337711
Ⓟ 06/2019 Subject to change

Copyright © Siemens AG 2019.
All rights reserved

Table of contents

1 Introduction 8
1.1 Purpose of this documentation 8
1.2 Checking the consignment 8
1.3 Industrial use 8
1.4 Product compatibility 9
1.5 Security information 9
1.6 Transportation and storage 10
1.7 Notes on warranty 10
2 Safety notes 11
2.1 Preconditions for use 11
2.1.1 Safety marking symbols 11
2.2 Laws and directives 11
2.2.1 Industry Canada conformity 12
2.2.2 Conformity with European directives 12
2.2.3 Radio Equipment Directive (RED) compliance (Europe) 13
2.2.4 FCC Conformity 13
2.2.5 CE electromagnetic compatibility (EMC) conformity 14
2.3 Use in hazardous areas 14
2.3.1 Loss of safety of device with type of protection "Intrinsic safety Ex i" 15
3 Description 16
3.1 SITRANS Probe LR 16
3.2 SITRANS Probe LR system implementation 17
4 Installing/mounting 18
4.1 Basic safety notes 18
4.1.1 Incorrect disassembly 18
4.2 Installation notes 19
4.3 Nozzle location 21
4.4 Nozzle design 21
4.5 Mounting instructions 22
5 Connecting 23
5.1 Power 23
5.2 Connecting SITRANS Probe LR 23
5.3 Nameplates for hazardous area installations 24
5.3.1 FM and CSA connection drawings 25

6 Commissioning 26

6.1 Basic safety notes 26

6.2 Local commissioning 26
6.2.1 Activating SITRANS Probe LR 26
6.2.2 Operating SITRANS Probe LR 26
6.2.3 Low temperature effects on RUN/PROGRAM modes 27
6.2.4 RUN mode 27
6.2.5 PROGRAM mode 28
6.2.6 Handheld programmer functions 28
6.2.6.1 Handheld programmer 29
6.2.6.2 Handheld programmer: function keys in PROGRAM mode 30
6.2.6.3 Handheld programmer: function keys in RUN mode 31
6.2.6.4 Accessing a parameter 31
6.2.7 Security 33
6.2.8 Changing a parameter value 33
6.2.9 Master reset 33
6.2.10 Using units or percent (%) 34
6.2.11 Quick start wizards 34
6.2.11.1 Quick setup for local operation (outline) 34
6.2.11.2 P001: Operation 35
6.2.11.3 P003: Measurement response 36
6.2.11.4 P005: Units 36
6.2.11.5 P006: Empty 36
6.2.11.6 P007: Span 37
6.2.11.7 P010: Language 38
6.2.11.8 P838 Auto false echo suppression 38
6.2.11.9 Additional settings 39

7 Parameter assignment 40

7.1 P000 Lock 41

7.2 Quick start (P001 to P010) 42

7.3 P003 Measurement response 43

7.4 P004 Antenna type 44

7.5 P005 Units 44

7.6 P006 Empty (process empty level) 44

7.7 P007 Span (process full level) 45

7.8 P010 Language 46

7.9 P050 to P055 Volume 46

7.10 P050 Vessel shape 46

7.11 P051 Maximum volume 48

7.12 P052 Vessel dimension A 48

7.13 P053 Vessel dimension L 49

7.14 P054 Level breakpoints 49

7.15 P055 Volume breakpoints 50

7.16 P069 Unlocked value 51

7.17 Failsafe (P070 to P073) 52
7.17.1 P070 Failsafe timer 52
7.17.2 P071 Failsafe material level 52
7.17.3 P073 Failsafe level 52

7.18 mA output (P201 to P215) 53
7.18.1 P201 mA Output function 53
7.18.2 Independent mA setpoint parameters (P210 and P211) 53
7.18.2.1 P210 4 mA setpoint (low output) 54
7.18.2.2 P211 20 mA setpoint (high output) 55
7.18.3 mA output limit parameters (P212 and P213) 55
7.18.3.1 P212 Minimum mA limit 55
7.18.3.2 P213 Maximum mA limit 55
7.18.4 P214 4 mA output trim 56
7.18.5 P215 20 mA output trim 56

7.19 Installation records (P341 to P346) 56
7.19.1 P341 RUN time 56
7.19.2 P342 Power-on resets 57
7.19.3 P343 Internal temperature 57
7.19.4 P346 Serial number 57

7.20 Range calibration (P652 to P655) 57
7.20.1 P652 Offset correction 58
7.20.2 P655 Propagation factor 58

7.21 Rate (P700 and P701) 59
7.21.1 P700 Maximum fill rate 59
7.21.2 P701 Maximum empty rate 59

7.22 Measurement verification (P709 to P713) 60
7.22.1 P709 Damping filter 60
7.22.2 P711 Echo lock 60
7.22.3 P712 Echo lock sampling 61
7.22.4 P713 Echo lock window 62

7.23 P752 HART address 63

7.24 Communications (P799) 63
7.24.1 P799 Communications control 63

7.25 Echo processing (P800 to P807) 63
7.25.1 P800 Near blanking 64
7.25.2 P801 Range extension 64
7.25.3 P804 Confidence threshold 64
7.25.4 P805 Echo confidence 65
7.25.5 P806 Echo strength 65
7.25.6 P807 Noise 65

7.26 Algorithm (P820) 65
7.26.1 P820 Echo algorithm 65

7.27 TVT (Time Varying Threshold) adjustment parameters (P831 to P839) 66
7.27.1 P831 Manual TVT Shaper 66
7.27.2 P832 Manual TVT Shaper Adjust 66
7.27.3 P837 Auto false echo suppression 66

7.27.4 P838 Auto false echo suppression distance ... 67
7.27.5 P839 TVT hover level ... 69

7.28 Test (P900 to P924) ... 69
7.28.1 P900 Software revision number ... 69
7.28.2 P901 Memory test ... 69

7.29 Measurement ... 69
7.29.1 P911 mA output value (HART/mA only) ... 69
7.29.2 P920 Reading measurement ... 70
7.29.3 P921 Material measurement ... 70
7.29.4 P922 Space measurement ... 70
7.29.5 P923 Distance measurement ... 70
7.29.6 P924 Volume measurement ... 70
7.29.7 P999 Master reset ... 71

8 Service and maintenance ... 72

8.1 Maintenance and repair work ... 72

8.2 Return procedure ... 72

8.3 Disposal ... 73

9 Troubleshooting ... 74

9.1 General fault codes ... 74

9.2 Fault codes (firmware revision 3.02 or higher) ... 74

9.3 Fault codes (firmware revision 1.05 or earlier) ... 76

9.4 Operation troubleshooting ... 78

10 Technical data ... 80

10.1 Power ... 80

10.2 Performance ... 81

10.3 Construction ... 82

10.4 Operating conditions ... 82

10.5 Process ... 82

10.6 Approvals ... 83

11 Dimension drawing ... 84

11.1 SITRANS Probe LR dimensions ... 84

A Technical reference ... 86

A.1 Principles of operation ... 86

A.2 Transceiver ... 86

A.3 Near blanking ... 87

A.4 Loss of echo (LOE) ... 87

A.5 Range extension ... 88

A.6 False-echo suppression ... 88

A.7 TVT (Time varying threshold) curves 88
A.8 Auto false-echo suppression 88
A.9 Output 90
A.10 Failsafe 91
A.11 Chemical compatibility 91
B HART communication 92
B.1 HART communication for SITRANS Probe LR 92
B.2 HART electronic device description (EDD) 92
B.3 SIMATIC process device manager (PDM) 92
B.4 Maintenance settings (accessible via PDM only) 93
B.5 HART version 93
B.6 Burst mode 93
C Application examples 94
C.1 Application examples introduction 94
C.2 Example 1: Liquid resin in storage vessel, level measurement 94
C.3 Example 2: Horizontal vessel with volume measurement 96
D Hazardous area installations 98
D.1 Wiring details 98
D.2 FM/CSA 98
D.3 EU equivalency 99
D.4 Loop voltage versus loop resistance 100
D.5 IS safety barrier selection 100
D.6 Instructions specific to hazardous area installations (reference European ATEX Directive 2014/34/EU Annex II, 1/0/6) 102
E Certificates and support 103
E.1 Technical support 103
E.2 Certificates 103
Glossary 104
Index 109

Introduction 1

1.1 Purpose of this documentation

These instructions contain all information required to commission and use the device. Read the instructions carefully prior to installation and commissioning. In order to use the device correctly, first review its principle of operation.

The instructions are aimed at persons mechanically installing the device, connecting it electronically, configuring the parameters and commissioning it, as well as service and maintenance engineers.

1.2 Checking the consignment

1. Check the packaging and the delivered items for visible damages.
2. Report any claims for damages immediately to the shipping company.
3. Retain damaged parts for clarification.
4. Check the scope of delivery by comparing your order to the shipping documents for correctness and completeness.

⚠ WARNING
Using a damaged or incomplete device Risk of explosion in hazardous areas. • Do not use damaged or incomplete devices.

1.3 Industrial use

NOTICE
Use in a domestic environment This Class B Group 1 equipment is intended for use in industrial areas. In a domestic environment this device may cause radio interference.

1.4 Product compatibility

The following table describes compatibility between document edition, device revision, engineering system and associated Electronic Device Description (EDD).

Manual edition	Remarks	Device revision
02/2006	• Resolved issue that could cause peak to be selected below the TVT curve. • MP&F parameters added to device. • Fault system upgraded to use S# codes to match PROFIBUS products. • Increased number of level/volume breakpoints to 32. • Improved linearity over ambient temperature. NOTE: Software revision 3.02 is not backwards compatible due to hardware compatibility.	Firmware: 3.02 EDD: 3.02.01
08/2004	Corrected issue: P210 and P211 values (or HART values for URV/LRV) were not being preserved over a power cycle if operation was set to distance or volume.	Firmware: 1.05 EDD: 1.04
06/2004	First edition	Firmware: 1.04 EDD: 2.00

1.5 Security information

Siemens provides products and solutions with industrial security functions that support the secure operation of plants, systems, machines, and networks.

In order to protect plants, systems, machines and networks against cyber threats, it is necessary to implement – and continuously maintain – a holistic, state-of-the-art industrial security concept. Siemens' products and solutions only form one element of such a concept.

Customer is responsible to prevent unauthorized access to its plants, systems, machines and networks. Systems, machines and components should only be connected to the enterprise network or the internet if and to the extent necessary and with appropriate security measures (e.g. use of firewalls and network segmentation) in place.

Additionally, Siemens' guidance on appropriate security measures should be taken into account. You can find more information about industrial security by visiting: https://www.siemens.com/industrialsecurity.

Siemens' products and solutions undergo continuous development to make them more secure. Siemens strongly recommends you apply product updates as soon as available and always use the latest product versions. Use of product versions that are no longer supported, and failure to apply latest updates may increase customer's exposure to cyber threats.

To stay informed about product updates, subscribe to the Siemens Industrial Security RSS Feed under
https://www.siemens.com/industrialsecurity.

1.6 Transportation and storage

To guarantee sufficient protection during transport and storage, observe the following:

- Keep the original packaging for subsequent transportation.
- Devices/replacement parts should be returned in their original packaging.
- If the original packaging is no longer available, ensure that all shipments are properly packaged to provide sufficient protection during transport. Siemens cannot assume liability for any costs associated with transportation damages.

NOTICE
Insufficient protection during storage The packaging only provides limited protection against moisture and infiltration. • Provide additional packaging as necessary.

Special conditions for storage and transportation of the device are listed in Technical data (Page 80).

1.7 Notes on warranty

The contents of this manual shall not become part of or modify any prior or existing agreement, commitment or legal relationship. The sales contract contains all obligations on the part of Siemens as well as the complete and solely applicable warranty conditions. Any statements regarding device versions described in the manual do not create new warranties or modify the existing warranty.

The content reflects the technical status at the time of publishing. Siemens reserves the right to make technical changes in the course of further development.

Safety notes 2

2.1 Preconditions for use

This device left the factory in good working condition. In order to maintain this status and to ensure safe operation of the device, observe these instructions and all the specifications relevant to safety.

Observe the information and symbols on the device. Do not remove any information or symbols from the device. Always keep the information and symbols in a completely legible state.

2.1.1 Safety marking symbols

In manual	On product	Description
⏚		earth (ground) terminal (shield)
⚠	⚠ Yellow background	WARNING: refer to accompanying documents (manual) for details.

2.2 Laws and directives

Observe the safety rules, provisions and laws applicable in your country during connection, assembly and operation. These include, for example:

- National Electrical Code (NEC - NFPA 70) (USA)
- Canadian Electrical Code (CEC) (Canada)

Further provisions for hazardous area applications are for example:

- IEC 60079-14 (international)
- EN 60079-14 (EU)

2.2.1 Industry Canada conformity

Canada Installations only: Industry Canada (IC) rules

NOTICE
Use on a "no-interference, no-protection" basis This device shall be installed and operated in a completely enclosed container to prevent RF emission, which otherwise can interfere with aeronautical navigation. Installation shall be done by trained installers, in strict compliance with the manufacturer's instructions. The use of this device is on a "no-interference, no-protection" basis: • The user shall accept operations of high-powered radar in the same frequency band which may interfere with or damage this device. • The user is responsible for removing, at the user's expense, any device found to interfere with primary licensing operations.

2.2.2 Conformity with European directives

The CE marking on the device symbolizes the conformity with the following European directives:

Electromagnetic compatibility EMC 2014/30/EU	Directive of the European Parliament and of the Council on the harmonisation of the laws of the Member States relating to electromagnetic compatibility
Low voltage directive LVD 2014/35/EU	Directive of the European Parliament and of the Council on the harmonisation of the laws of the Member States relating to the making available on the market of electrical equipment designed for use within certain voltage limits
Atmosphère explosible ATEX 2014/34/EU	Directive of the European Parliament and the Council on the harmonisation of the laws of the Member States relating to equipment and protective systems intended for use in potentially explosive atmospheres
RED 2014/53/EU	Directive of the European Parliament and of the Council on the harmonisation of the laws of the Member States relating to the making available on the market of radio equipment and repealing Directive 1999/5/EC

The applicable directives can be found in the EC conformity declaration of the specific device.

2.2.3 Radio Equipment Directive (RED) compliance (Europe)

Hereby, Siemens declares that the SITRANS Probe LR is in compliance with the essential requirements and other relevant provisions of Directive 2014/53/EU. The Probe LR complies with EN 302 372 for use in closed storage vessels, when installed according to the installation requirements of EN 302 372, and may be used in all EU countries. For the receiver test that covers the influence of an interferer signal to the device, the performance criterion has at least the following level of performance according to ETSI TS 103 361 [6]:

- Performance criterion: measurement value variation Δd over time during a distance measurement
- Level of performance: Δd ≤ ±50 mm

2.2.4 FCC Conformity

US Installations only: Federal Communications Commission (FCC) rules

WARNING

Authority to operate equipment

Changes or modifications not expressly approved by Siemens could void the user's authority to operate the equipment.

Note

- This equipment has been tested and found to comply with the limits for a Class B digital device, pursuant to Part 15 of the FCC Rules. These limits are designed to provide reasonable protection against harmful interference when the equipment is operated in a commercial environment.
- This equipment generates, uses, and can radiate radio frequency energy and, if not installed and used in accordance with the instruction manual, may cause harmful interference to radio communications. Operation of this equipment in a residential area is likely to cause harmful interference to radio communications, in which case the user will be required to correct the interference at his own expense.

2.2.5 CE electromagnetic compatibility (EMC) conformity

This equipment has been tested and found to comply with the following EMC standards:

EMC standard	Title
CISPR 11:2009 + A1:2010/EN 55011:2009 + A1:2010, CLASS A	Limits and methods of measurements of radio disturbance characteristics of industrial, scientific, and medical (ISM) radio-frequency equipment.
EN 61326:2013 (IEC 61326:2012)	Electrical Equipment for Measurement, Control and Laboratory Use – Electromagnetic Compatibility.
EN61000-4-2:2009	Electromagnetic Compatibility (EMC) Part 4-2: Testing and measurement techniques – Electrostatic discharge immunity test.
EN61000-4-3:2006 + A1:2008 + A2:2010	Electromagnetic Compatibility (EMC) Part 4-3: Testing and measurement techniques – Radiated, radiofrequency, electro-magnetic field immunity test 2006 + A1:2008 + A2:2010.
EN61000-4-4:2004 + A1:2010	Electromagnetic Compatibility (EMC) Part 4-4: Testing and measurement techniques – Electrical fast transient/burst im-munity test.
EN61000-4-5:2006	Electromagnetic Compatibility (EMC) Part 4-5: Testing and measurement techniques – Surge immunity test.
EN61000-4-6:2010	Electromagnetic Compatibility (EMC) Part 4-6: Testing and measurement techniques – Immunity to conducted disturb-ances, induced by radio-frequency fields.
EN61000-4-8:2010	Electromagnetic Compatibility (EMC) Part 4-8: Testing and measurement techniques – Power frequency magnetic field immunity test.

2.3 Use in hazardous areas

Qualified personnel for hazardous area applications

Persons who install, connect, commission, operate, and service the device in a hazardous area must have the following specific qualifications:

- They are authorized, trained or instructed in operating and maintaining devices and systems according to the safety regulations for electrical circuits, high pressures, aggressive, and hazardous media.
- They are authorized, trained, or instructed in carrying out work on electrical circuits for hazardous systems.
- They are trained or instructed in maintenance and use of appropriate safety equipment according to the pertinent safety regulations.

2.3.1 Loss of safety of device with type of protection "Intrinsic safety Ex i"

WARNING

Loss of safety of device with type of protection "Intrinsic safety Ex i"

If the device or its components have already been operated in non-intrinsically safe circuits or the electrical specifications have not been observed, the safety of the device is no longer ensured for use in hazardous areas. There is a risk of explosion.

- Connect the device with type of protection "Intrinsic safety" solely to an intrinsically safe circuit.
- Observe the specifications for the electrical data on the certificate and/or in Technical data (Page 80).

Description

3

3.1 SITRANS Probe LR

SITRANS Probe LR is a 2-wire loop-powered, continuous level measuring instrument that utilizes advanced pulse radar technology operating at a frequency of approximately 6 GHz. The instrument consists of an electronic component coupled to the antenna and process connection. It is very easy to install and set up, using either the infrared handheld programmer locally, or using SIMATIC PDM from a remote location.

Communication is via HART. Signals are processed using Process Intelligence which has been field-proven in over 500,000 applications worldwide (ultrasonic and radar).

SITRANS Probe LR is available in two versions

- General purpose (non-hazardous)
- Intrinsically Safe (with suitable barrier)

Applications

Note

Approval information

Refer to product label for approval information.

SITRANS Probe LR is designed to measure liquid levels in a variety of applications.

- liquid bulk storage vessels
- simple process vessels with gentle agitation
- liquids
- slurries

Shield length 250 mm (10"): use for long nozzles of 250 mm (10") or less in length

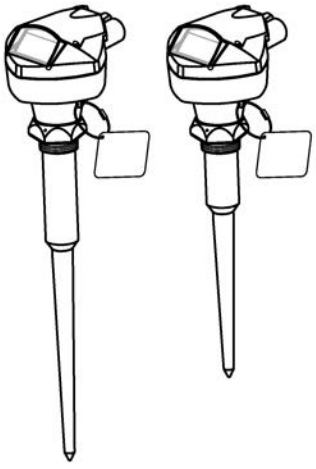

Shield length: 100 mm (4"): use for nozzles of 100 mm (4") or less in length

3.2 SITRANS Probe LR system implementation

SITRANS Probe LR supports HART communication protocol and SIMATIC PDM software.

Typical PLC/mA configuration with HART

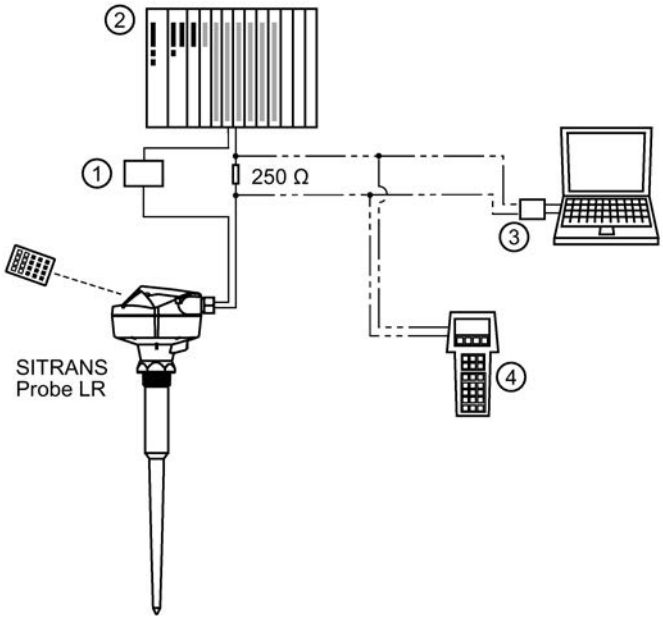

① Power supply

Depending on the system design, the power supply may be separate from the PLC, or integral to it.

A 250 Ohm resistor may be required if the loop resistance is less than 250 Ohms.

② Active PLC

③ HART modem

④ HART communicator

Programming

SITRANS Probe LR carries out its level measurement function according to the set of built-in parameters. You can make parameter changes via the handheld programmer, via a PC using SIMATIC PDM, or via a HART Handheld Communicator.

For a listing of device approvals, see Approvals (Page 83) or Nameplates for hazardous area installations (Page 24).

Installing/mounting

4

4.1 Basic safety notes

4.1.1 Incorrect disassembly

WARNING

Incorrect disassembly

The following risks may result from incorrect disassembly:

- Injury through electric shock

- Risk through emerging media when connected to the process

- Risk of explosion in hazardous area

In order to disassemble correctly, observe the following:

- Before starting work, make sure that you have switched off all physical variables such as pressure, temperature, electricity etc. or that they have a harmless value.
- If the device contains hazardous media, it must be emptied prior to disassembly. Make sure that no environmentally hazardous media are released.
- Secure the remaining connections so that no damage can result if the process is started unintentionally.

DANGER

Pressure applications

Danger to personnel, system and environment will result from improper disassembly.

- Never attempt to loosen, remove, or disassemble process connection while vessel contents are under pressure.

Note

Product designation

This product is designated as a Pressure Accessory per Directive 2014/68/EU and is not intended for use as a safety device.

Note

Chemical compatibility

Materials of construction are chosen based on their chemical compatibility (or inertness) for general purposes. For exposure to specific environments, check with chemical compatibility charts before installing.

Note

Material compatibility

Siemens can provide you with support concerning selection of sensor components wetted by process media. However, you are responsible for the selection of components. Siemens accepts no liability for faults or failures resulting from incompatible materials.

4.2 Installation notes

- Refer to device nameplate for approval information.
- The process device tag shall remain with the pressure boundary assembly. The process pressure boundary assembly comprises the components that act as a barrier against pressure loss from the process vessel: that is, the combination of process connection body and emitter, but normally excluding the electrical enclosure. In the event the instrument package is replaced, the process device tag shall be transferred to the replacement unit.
- SITRANS Probe LR units are hydrostatically tested, meeting or exceeding the requirements of the ASME Boiler and Pressure Vessel Code and the European Pressure Equipment Directive.
- Serial numbers stamped in each process connection body provide a unique identification number indicating date of manufacture.

  Example: MMDDYY – XXX (where MM = month, DD = day, YY = year, and XXX= sequential unit produced

  Further markings (space permitting) indicate flange configuration, size, pressure class, material, and material heat code.

Recommendations

- Ensure ambient temperature is within –40 to 80 °C (–40 to 176 °F).
- Provide easy access for viewing the display and programming via the handheld programmer.
- Ensure the environment is suitable to the housing rating and materials of construction.

Precautions

- Avoid proximity to high voltage or current wiring, high voltage or current contacts, and to variable frequency motor speed controllers.
- Avoid interference to the emission cone from obstructions or from the fill path.
- Avoid central locations on vessels.

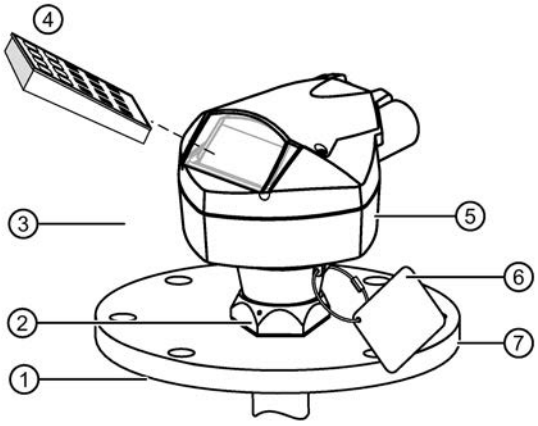

① Process temperature: –40 to 80 °C (–40 to 176 °F)

② Locking collar over threaded connection; secured by three 2 mm Allen set-screws.

When the locking collar is secured, it prevents the enclosure rotating on the threaded connection.

③ Ambient temperature (surrounding enclosure volume) –40 to 80 °C (–40 to 176 °F)

④ Handheld programmer

⑤ Nameplate location

⑥ Process device tag

⑦ Customer-supplied flange

Avoid central locations on vessels

For vessels with conical or parabolic tops, avoid mounting the device at the center. The concavity of the top can focus echoes into the center, giving false readings.

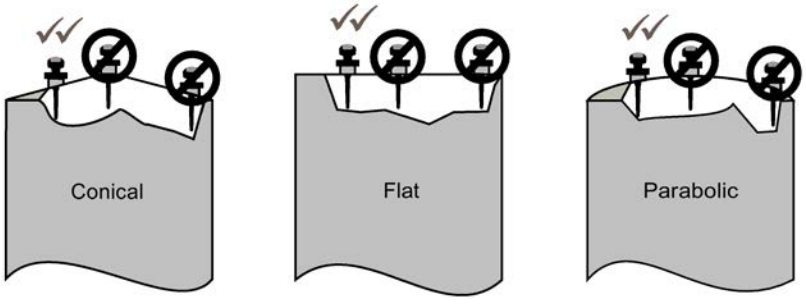

4.3 Nozzle location

Beam angle

- Beam angle is the width of the cone where the energy density is half of the peak energy density.
- The peak energy density is directly in front of and in line with the rod antenna.
- There is a signal transmitted outside the beam angle, therefore false targets may be detected.

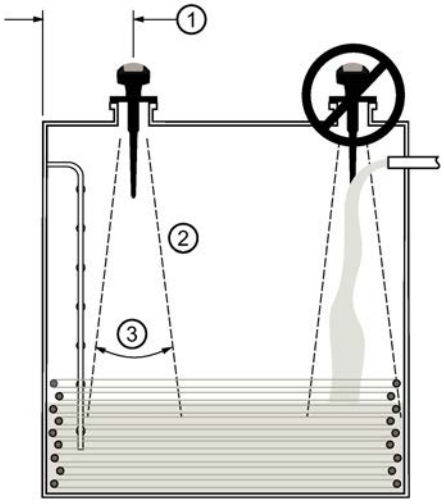

① Min. 300 mm (1 ft) per 3 m (10') of vessel height
② Emission cone
③ Beam angle 28°

Emission cone

- Keep emission cone free of interference from ladders, pipes, I-beams or filling streams.
- Locate the antenna away from the side wall, to avoid interference from indirect echoes.
- Make allowance for the emission cone spreading: allow a minimum of 300 mm (1 ft) for every 3 m (10 ft) of vessel height.

4.4 Nozzle design

Note

Nozzle design

- For nozzles 100 mm (4") in length or shorter, use the 100 mm (4") shield.
- For nozzles 250 mm (10") in length or shorter, use the 250 mm (10") shield.

The end of the shield section or end of the horn should protrude a minimum of 10 mm (0.4”) to avoid false echoes being reflected from the nozzle.

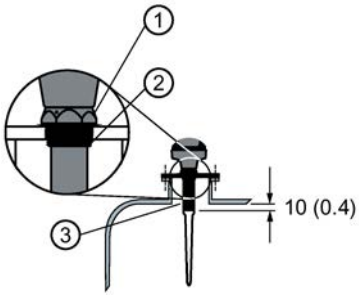

① Locking ring secured by three 2 mm Allen set-screws
② Threaded connection
③ Shield

Location on a manhole cover

- A manhole cover is typically a covered nozzle with a diameter 610 mm (24”) or greater.
- For optimum signal conditions, locate the antenna off-center, typically 100 mm (4") from the side.

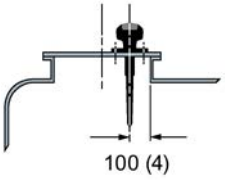

4.5 Mounting instructions

Note

Rotating the enclosure

Do not rotate the enclosure after programming and vessel calibration, otherwise an error may occur, caused by a polarity shift of the transmit pulse.

1. Before inserting SITRANS Probe LR into its mounting connection, check to ensure the threads are matching, to avoid damaging them.
2. Screw SITRANS Probe LR into the process connection, and hand tighten. For pressure applications, it will be necessary to use PTFE tape (or other appropriate thread sealing compound) and tighten the process connection beyond hand tight. The maximum torque is 40 N-m (30 ft.lbs.).
3. If you need to rotate the enclosure, use a 2 mm Allen key to loosen the three set screws that secure the locking collar.
4. Once the enclosure is in a suitable position, tighten the set screws.

Connecting

5

5.1 Power

Note

DC terminals

DC terminals shall be supplied from an SELV (Safety Extra Low Voltage) source in accordance with IEC-1010-1 Annex H.

Note

Insulation

All field wiring must have insulation suitable for rated voltages.

5.2 Connecting SITRANS Probe LR

Unscrew the two lid screws to access the terminal block.

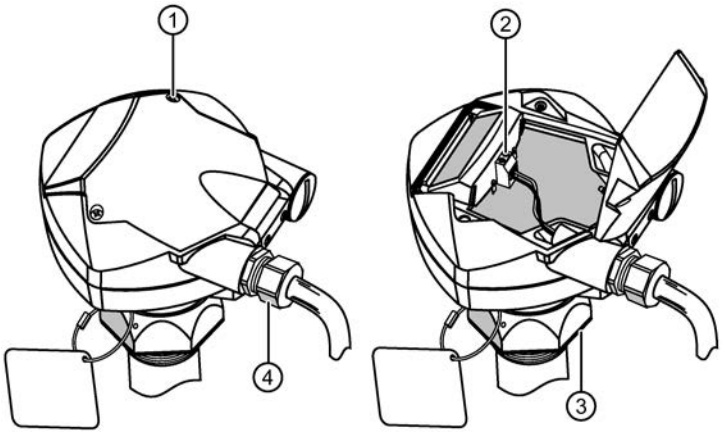

① Lid screw (1 of 2)

② Terminal block

③ Locking collar

④ Strain relief (or NPT cable entry)

If cable is routed through conduit, use only approved, suitably-sized hubs for waterproof applications.

Note

- Use shielded, twisted pair cable (wire gauge AWG 14 to 22).
- Separate cables and conduits may be required to conform to standard instrumentation wiring practices or electrical codes.
- The non-metallic enclosure does not provide a continuous ground path between conduit connections: use grounding type bushings and jumpers.
- For detailed information on Intrinsic Safety setups, see Wiring details (Page 98).

1. If you want to rotate the enclosure, use a 2 mm Allen key to loosen the 3 Allen set screws securing the locking collar. Position the unit and retighten the screws.
2. Strip the cable jacket for approximately 70 mm from the end of the cable, and thread the wires through the strain relief. If cable is routed through conduit, use only approved suitable-size hubs for waterproof applications.
3. Connect the wires to the terminals: the polarity is identified on the terminal block.
4. Tighten the strain relief to form a good seal.
5. Close the lid and tighten screws. Do not overtighten screws. (Recommended torque is 1.1 to 1.7 N-m (10 to 15 in-lb) of torque.)

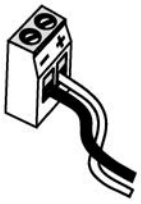

5.3 Nameplates for hazardous area installations

Note

Sample nameplate

The nameplate is given as an example only.

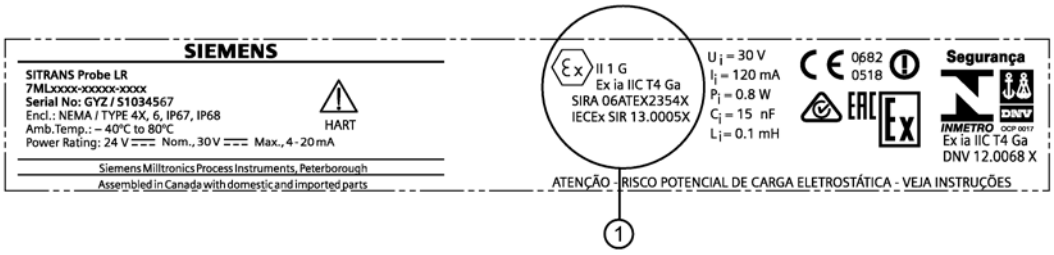

① ATEX certificate

Device nameplate (ATEX/IECEX/INMETRO/RMC)

The ATEX certificate can be downloaded from the product page of our website at: www.siemens.com\sitransprobelr (www.siemens.com\sitransprobelr).

Go to **Support** > **Approvals** / **Certificates**.

The IECEx certificate listed on the nameplate can be viewed on the IECEx website. Go to:http://iecex.iec.ch (http://iecex.iec.ch) and click on Ex Equipment Certificates of Conformity then enter the certificate number IECEx SIR 13.0005X.

5.3.1 FM and CSA connection drawings

The FM Intrinsically Safe connection drawing (A5E01003040) listed on the device nameplate can be downloaded from our website:

Product page (www.siemens.com/ProbeLR)

Go to **Technical Info > Images, graphics, drawings**.

The CSA Intrinsically Safe connection drawing (A5E01003039) listed on the device nameplate can be downloaded from our website:

Product page (www.siemens.com/ProbeLR)

Go to **Technical Info > Images, graphics, drawings**.

Commissioning 6

6.1 Basic safety notes

WARNING

Loss of explosion protection

Risk of explosion in hazardous areas if the device is open or not properly closed.

- Close the device as described in Connecting SITRANS Probe LR (Page 23).

WARNING

Loss of type of protection

Risk of explosion. Damage to device if the enclosure is open or not properly closed. The type of protection specified on the nameplate or in Approvals (Page 83) is no longer guaranteed.

- Make sure that the device is securely closed.

6.2 Local commissioning

6.2.1 Activating SITRANS Probe LR

Note

Keep infrared devices such as laptops and cell phones away from SITRANS Probe LR to prevent inadvertent operation.

Power up the instrument. SITRANS Probe LR starts in RUN mode, and detects the material level. It displays the material level (in meters) referenced from Empty (process empty level). This is the default startup mode.

6.2.2 Operating SITRANS Probe LR

SITRANS Probe LR has two modes of operation: RUN and PROGRAM.

6.2.3 Low temperature effects on RUN/PROGRAM modes

If the internal temperature falls to –30 °C (–22 °F) or below, it will affect both RUN and PROGRAM modes.

RUN mode will operate normally, with the following exceptions:

- Handheld programmer operation is disabled
- The LCD displays only limited information: the bar graph and the reliable/ unreliable echo indicator

PROGRAM mode:

- Handheld programmer operation is disabled

6.2.4 RUN mode

SITRANS Probe LR automatically starts in RUN mode when power is applied, and detects the material level. The primary reading displays the material level (in meters) referenced from Empty (process empty level). This is the default start-up display mode.

System status is displayed on the LCD, or on a remote communications terminal.

Display

Normal operation

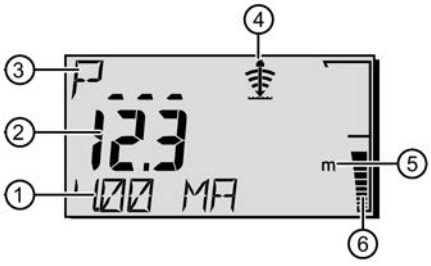

Failsafe operation

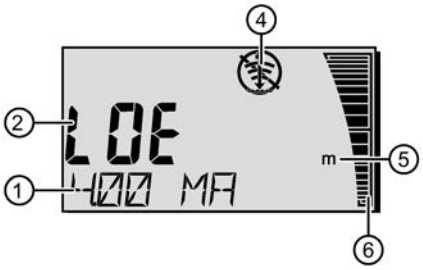

1. Auxiliary Reading (depending on the parameter selected, it displays milliAmp value, distance or confidence, with units where applicable)
2. Primary reading (displays level, distance, or volume, in either units or percent)
3. Secondary Reading (displays Parameter number for Auxiliary Reading[1])
4. Echo status indicator: Reliable Echo or Unreliable Echo
5. Units or percent
6. Active bar graph represents material level

If the echo confidence drops below the echo confidence threshold, the failsafe timer starts running. When the timer expires, the letters LOE (Loss of Echo) alternate with the reading every two seconds, and the Reliable Echo indicator is replaced by the Unreliable Echo indicator. When a valid reading is received, the level reading display returns to normal operation.

[1)] Press to display the auxiliary reading field when in RUN mode.

6.2.5 PROGRAM mode

Programming

Note

Do not use the handheld programmer at the same time as SIMATIC PDM, or erratic operation may result.

- Set parameters to suit your specific application.
- Activate PROGRAM mode at any time, to change parameter values and set operating conditions.
- For local programming, use the Siemens handheld programmer.
- For programming from a distance, use either a PC running SIMATIC PDM, or a HART handheld communicator.

Display

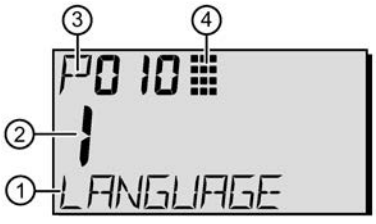

① Auxiliary Reading (displays parameter names for the Quick Start parameters, if a language is selected. It displays the index value for indexed parameters, such as P054.)

② Primary Reading (displays parameter value)

③ Secondary Reading (displays parameter number)

④ Programming indicator

6.2.6 Handheld programmer functions

The handheld programmer used with this device contains lithium batteries that are non-replaceable.

Lithium batteries are primary power sources with high energy content designed to provide the highest possible degree of safety.

WARNING

Potential hazard

Lithium batteries may present a potential hazard if they are abused electrically or mechanically. Observe the following precautions when handling and using lithium batteries:

- Do not short-circuit, recharge or connect with false polarity.
- Do not expose to temperatures beyond the specified temperature range.
- Do not incinerate.
- Do not crush, puncture or open cells or disassemble.
- Do not weld or solder to the battery's body.
- Do not expose contents to water.

6.2.6.1 Handheld programmer

For direct access to SITRANS Probe LR, point the handheld programmer at the display from a maximum distance of 600 mm (2 ft), and press the keys.

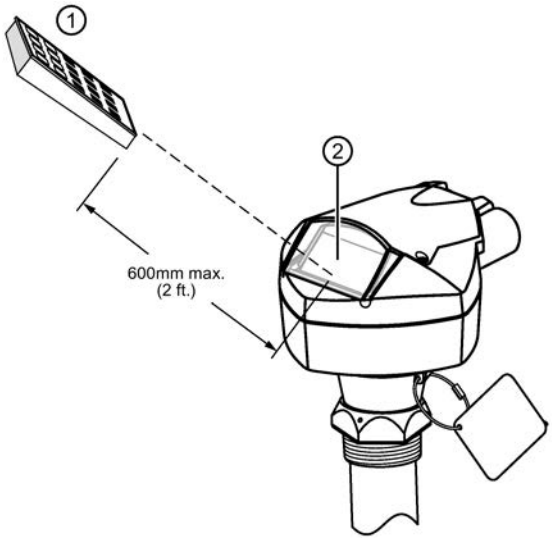

① Handheld programmer
② Display

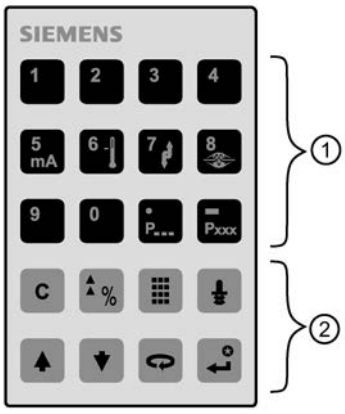

① Numeric and auxiliary keys
② Function keys

6.2.6.2 Handheld programmer: function keys in PROGRAM mode

KEY	FUNCTION
0 to 9	Values
P...	Decimal point
Pxxx	Negative value
C	CLEAR value
%	TOGGLE between Units and % on parameter value
	End PROGRAM session and enable RUN mode
	Update echo quality parameters
	Parameter scroll-up
	Parameter scroll-down
	DISPLAY opens parameter fields
	ENTER the displayed value

6.2.6.3 Handheld programmer: function keys in RUN mode

Key	RUN mode
5 mA	mA output value displayed in auxiliary reading field.
6	Internal enclosure temperature displayed in auxiliary reading field.
P	Parameter for auxiliary readings Press P to display the auxiliary reading field when in RUN mode.
8	Displays the value representing Echo Confidence (P805).
%	Toggle between Units and % on reading display.
	Initiate and complete PROGRAM mode access.
	Distance displayed in auxiliary reading field.

6.2.6.4 Accessing a parameter

Note

- The following instructions apply when using the Handheld Programmer.
- Do not use the Handheld Programmer at the same time as SIMATIC PDM, or erratic operation may result.
- You do not need to key in initial zeros when entering a parameter number: for example, for P005, key in 5.

1. Press PROGRAM then DISPLAY, to activate the PROGRAM mode.

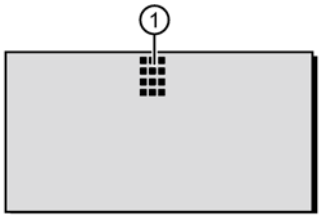

① PROGRAM icon

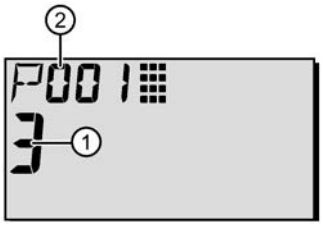

① Parameter value
② Parameter number

2. Either use the ARROW keys to scroll to a different parameter, or:
3. Press DISPLAY to open the Parameter Number field.

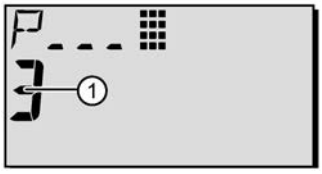

① Current value

4. Key in the desired parameter number followed by ENTER

   For example: press 5 mA

   The LCD displays the new parameter number and value.

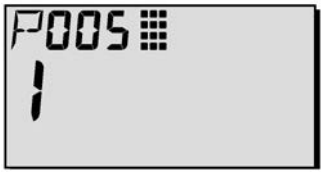

6.2.7 Security

The Lock parameter, P000, secures SITRANS Probe LR against changes via the handheld programmer. To enable programming, set P000 to the Unlocked Value stored in P069. To disable programming, enter a different value.

Note

Configuration change

A remote master can still change configuration, if P799 is set to allow this.

6.2.8 Changing a parameter value

Note

- Security must be disabled to enable programming: set P000 to the Unlocked Value stored in P069.
- Invalid entries will be rejected or limited.
- CLEAR can be used to clear the field.

1. Use the ARROW keys [▼] [▲] to scroll to the parameter number, or press DISPLAY and key in the parameter number followed by ENTER .
2. Key in the new value.
3. Press ENTER [↵] to set the value.

Parameter reset to factory default

1. Scroll to the parameter or enter its address.
2. Press CLEAR [C] then ENTER [↵]. The value returns to the default setting.

6.2.9 Master reset

Reprogramming required

Note

Reprogramming required

Following a Master Reset, complete reprogramming is required.

Resets all parameters to their factory settings, with the following exceptions:

- P000 and P069 are not reset.
- P838 is not reset (the learned TVT curve is not lost).

1. Press PROGRAM [▦] , then DISPLAY [⇔] to activate PROGRAM mode.
2. Press DISPLAY [⇔] to open parameter fields.

3. Key in 999.

   Press CLEAR [c] then ENTER [↵] , to Clear All and initiate reset. The LCD displays C.ALL.

4. Reset complete. (Reset takes several seconds to complete.)

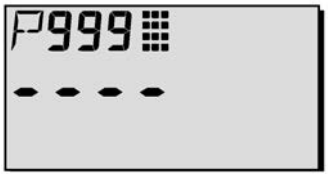

6.2.10 Using units or percent (%)

Many parameters can be viewed either as a percentage, or in measurement units (P005). View the parameter, then press MODE [%] to toggle between units and percentage.

6.2.11 Quick start wizards

6.2.11.1 Quick setup for local operation (outline)

Set the Quick Start parameters between P001 and P010 (the main settings that apply to all applications and make the system operational). Then set P837 and P838 to ignore false echoes, and return to RUN mode.

1. Select a language option, or numeric, for the auxiliary reading (P010).
2. Select the measurement mode: level, space, or distance (P001).
3. Set the response time to level changes (P003).
4. Select units of measurement: m, cm, mm, ft, or in. (P005).
5. Set process empty level (Empty: P006).
6. Set the range to be measured (Span: P007).
7. Set Auto False-Echo Suppression Distance (P838).
8. Enable Auto False-Echo Suppression (P837).
9. Return to RUN mode.

Note

- In PROGRAM mode, you can use the ARROW keys to scroll to a parameter number.
- The default parameter values are indicated by an asterisk (*) in the tables.

Using the handheld programmer, set each parameter value to suit your application.

6.2.11.2 P001: Operation

Select the measurement mode required for the application (P001: Operation)

To measure how full the vessel is, select **Level**: the reading can be returned as level or as volume:

- for a level reading, ensure P050 is set to 0: the reading returns the distance from process empty level (Empty) to the current level
- for a volume reading, select a vessel shape at P050, and set volume parameters P051 to P055 as required

To measure how much space remains in the vessel, select **Space**:

- **Space** returns a reading for the distance between current level and process full level (Span)

To measure the distance from the reference point to the current level, select **Distance**. For the reference point, see SITRANS Probe LR dimensions (Page 84).

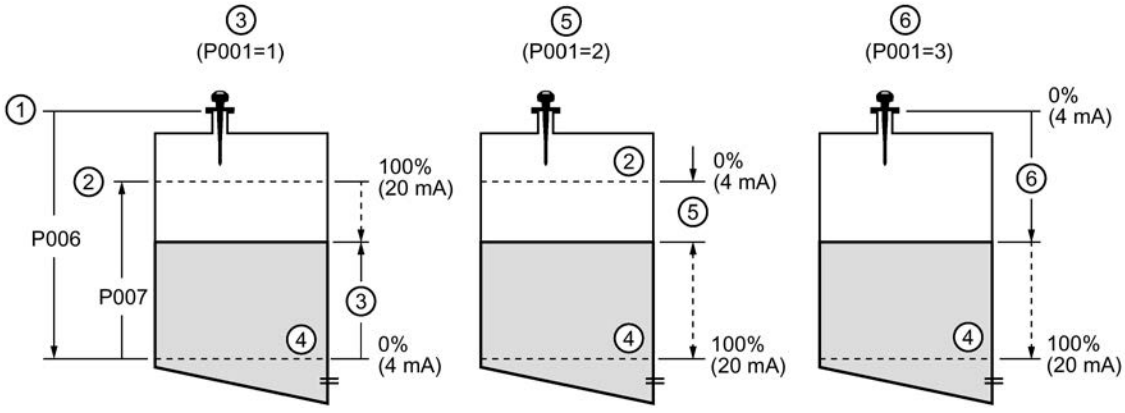

① Reference point
② Span
③ Level
④ Empty
⑤ Space
⑥ Distance

Note

- Setting P001 resets Span (P007), unless Span has previously been set to a different value. Span is set to Empty distance minus 110% of Blanking, unless Operation is set to distance measurement (P001=3). In this case, Span is set to the same value as Empty (P006). Default blanking distance is 0.3 m (1 ft). For more details, see Near blanking (Page 87).
- Changing P001 may reset Output Function (P201): this applies to HART only.

Parameter	Values		Description
P001	1	*	**Level** returns material level referenced from Empty (process empty level). The reading is returned in volumetric units if parameters P050 to P055 are set to enable this.
	2		**Space** returns material level referenced from Span (process full level).
	3		**Distance** returns material level referenced from the reference point. For the reference point of the standard configuration, see Near blanking (Page 87).

6.2.11.3 P003: Measurement response

Set response time to filling/emptying rate (P003: Measurement Response)

Set P003 to a measurement response speed just faster than the maximum filling or emptying rate (whichever is greater).

Parameter	Values		Description		Parameters affected by P003
	1	*	Slow	0.1m/minute	P070, P700, P701, P709, P711
	2		Medium	1m/minute	
	3		Fast	10m/minute	

Use a setting just faster than the maximum filling or emptying rate (whichever is greater). Slower settings provide higher accuracy: faster settings allow for more level fluctuation.

(For more detail on measurement response, see Transceiver (Page 86))

P004 Antenna type (view only)

Value	240	rod antenna

6.2.11.4 P005: Units

Select the measurement units required (P005: Units)

Parameter	Value		Description
P005	1	*	meters
	2		centimeters
	3		millimeters
	4		feet
	5		inches

6.2.11.5 P006: Empty

Set process empty level (P006: Empty)

Value	Range	0.0000 to 20.00
	Default	20.00 m (maximum range)

Enter the distance from the antenna reference point[1)] to process empty level (Empty), using units set in P005. Empty can be set to any distance: not necessarily the bottom of the vessel. For reference point, see SITRANS Probe LR dimensions (Page 84).

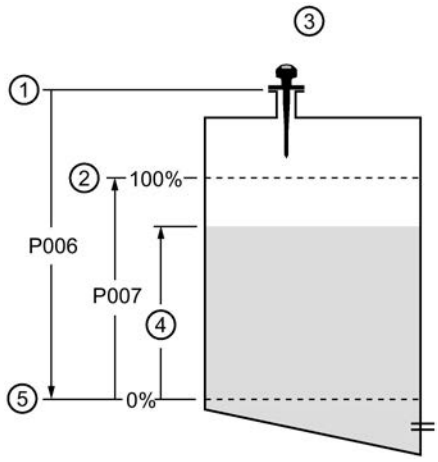

① Reference point
② Span
③ Level setup
④ Level
⑤ Empty

Note

P006 and P007 are interlinked: see notes attached to P007.

6.2.11.6 P007: Span

Set the range to be measured (P007: Span)

Value	Range	0.0000 to 20.00
	Default	19.56 (see note below)

Enter the distance between Empty (process empty level) and Span (process full level), in the units set in P005. Span can be set at any distance above Empty level.

Note

- Setting P006 resets Span, if it has not previously been set to a different value.
- The default setting for Span is based on Operation (P001) and Empty (P006). Span is set to Empty minus 110% of Blanking distance, unless Operation is set to distance (P001=3). In this case, Span is set to Empty distance. Blanking distance is 0.3 m (1 ft), plus the shield length (if any).
- Always prevent the monitored surface from approaching within 0.3 m (1 ft) of the reference point, as this is the minimum distance detectable.

6.2.11.7 P010: Language

The parameter title appears in the language selected, for parameters P000 to P010. If a language is selected, parameter titles for the Quick Start parameters are displayed in the auxiliary reading field.

Parameter	Value		Description
P010	0	*	Numeric/None
	1		English
	2		German
	3		French
	4		Spanish

Parameter	Auxiliary reading
P000	LOCK
P001	OPERATION
P003	MEAS RESP
P004	ANTENNA
P005	UNITS
P006	EMPTY
P007	SPAN
P010	LANGUAGE

6.2.11.8 P838 Auto false echo suppression

Enable False-Echo Suppression (P837: Auto False-Echo Suppression)

P837 instructs SITRANS Probe LR to learn the echo profile at that moment, and use the learned profile instead of the default TVT curve.

Parameter	Value		Description
P837	0		Off
	1	*	Use "Learned" TVT
	2		"Learn"

Set up Auto False-Echo Suppression:

- Perform this function when the vessel is empty or nearly empty.
- First rotate the instrument for best signal (lowest false-echo amplitude)
- Determine distance from reference point to material level and subtract 0.5 m (1.6 ft).
- Press PROGRAM , then DISPLAY .
- Select P838, key in [distance to material level minus 0.5 m/1.6 ft], and press ENTER .
- Select P837.
- Press 2 and then press ENTER . P837 will automatically revert to 1 (use Learned TVT) after a few seconds.
- Press PROGRAM to return to RUN mode.

6.2.11.9 Additional settings

- Convert readings to volume (P050 to P055)
- Stored unlock value (P069)
- Set Failsafe timer conditions (P070 to P073)
- Control Analog Output (P201 to P215, and P911)
- Check installation records (P341 to P346)
- Calibrate sensor for unusual conditions (P652 to P655)
- Limit rate of change of reading (P700 to P701)
- Verify measurements (P709 to P713)
- Configure communications (P799)
- Control echo processing (P800 to P820)
- TVT curve adjustments - Auto False-Echo Suppression (P831 to P839)
- Software diagnostic tests (P900 to P901)
- Adjust measurements (P911 to P924)

For a full list of available parameters, see Parameter assignment (Page 40).

Parameter assignment 7

Note

- Keep infrared devices such as laptops and cell phones away from SITRANS Probe LR to prevent inadvertent operation.
- Do not use the Handheld Programmer at the same time as SIMATIC PDM, or erratic operation may result.

SITRANS Probe LR is configured through its parameters, and the application determines the parameter values which are entered into the instrument. Check your value entries carefully before operating SITRANS Probe LR, to ensure optimum performance.

Helpful hints

- Default values are indicated with an asterisk (*) in the parameter tables, unless explicitly described
- Primary index is an address: for example, P054
- Secondary index is a sub-address that allows for multiple values on an indexed point, and allows indexed values from more than one parameter to be linked, for example, the breakpoints in P054 and P055.

To access a parameter and change a value (primary index):

Note

Initial zeros in a parameter number do not have to be entered: for example, for P001, key in 1.

1. Press PROGRAM then DISPLAY to activate PROGRAM Mode.
2. Either use the ARROW keys to scroll to each parameter number, or press DISPLAY again to access the parameter number field and key in the parameter number followed by ENTER.
3. Key in the new value.
4. Press ENTER.

To access a secondary index and change a value:

Note

- In a parameter with a secondary index, the ARROW keys [▼] [▲] control whichever index was most recently changed.
- When you first access a parameter, the ARROW keys control the primary index (parameter number).
- After the secondary index is changed, the ARROW keys control the secondary index.
- When the primary index is changed, the ARROW keys revert to the primary index.

1. Select the parameter number, for example P054: the secondary index is displayed in the auxiliary reading.
2. Press DISPLAY [⇔] twice (the auxiliary reading field goes blank). Pressing DISPLAY twice focusses control on the secondary index.
3. Key in the address of the desired index, or use the ARROW keys to scroll to the desired secondary index number, then press ENTER .
4. Key in the new index value and press ENTER [↵].
5. Press DISPLAY [⇔] twice, then use the ARROW keys or key in the parameter number to select a different parameter.

7.1 P000 Lock

Note

- This lock only applies to the handheld programmer: it does not lock access through communications.
- A remote master can change configuration if P799 is set to allow this.

Secures SITRANS Probe LR from parameter changes via the handheld programmer.

Value	Unlocked value (P069)	*	Unlocked: programming permitted[1)]
	other		Locked: programming not permitted

[1)] The factory setting for P069 is 1954: after a new Unlocked value is entered and accepted, the new value becomes the default setting.

To secure the programming lock:

1. Key in 0, and press ENTER [↵].
2. Key in any value other than the Unlocked Value (P069)
3. Press ENTER [↵] to set the value: PROGRAM mode is now active for viewing only.

To unlock the instrument and enable programming changes:

1. Key in **0,** and press ENTER ↵.
2. Key in the Unlocked Value (P069).
3. Press ENTER to set the value: PROGRAM mode is now active for programming.

7.2 Quick start (P001 to P010)

P001 Operation

Note

Default values are indicated with an asterisk (*) in the parameter tables, unless explicitly described.

Sets the type of measurement required for the application. (This affects the local LCD only: the primary variable for HART is controlled by P201.)

To measure how full the vessel is, select Level. The reading can be returned as level or as volume:

- for a level reading, ensure P050 is set to 0: the reading returns the distance from process empty level (Empty) to the current level
- for a volume reading, select a vessel shape at P050, and set volume parameters P051 toP055 as required

To measure how much space remains in the vessel, select Space:

- Space returns a reading for the distance between current level and process full level (Span)

To measure the distance from the reference point to the current level, select Distance. For the reference point, see SITRANS Probe LR dimensions (Page 84).

Values	1	*	Level returns material level referenced from Empty (process empty level). The reading is returned in volumetric units if parameters P050 to P055 are set to enable this.
	2		Space returns material level referenced from Span (process full level).
	3		Distance returns material level referenced from the reference point. For the reference point, see SITRANS Probe LR dimensions (Page 84).

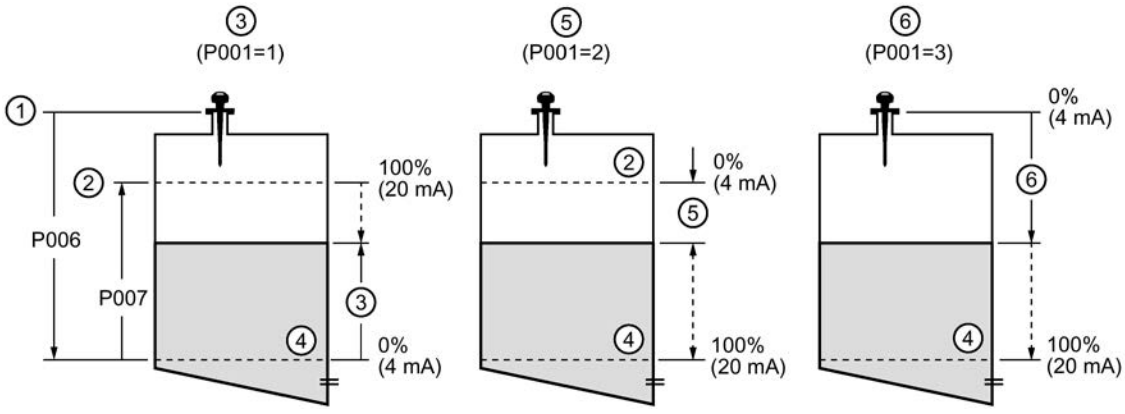

① Reference point
② Span
③ Level
④ Empty
⑤ Space
⑥ Distance

Note

- Setting P001 resets Span (P007), unless Span has previously been set to a different value. Span is set to Empty distance minus 110% of Blanking unless P001 is set to 3 (distance measurement). In that case it is set to the same value as Empty (P006). See Near blanking (Page 87) for more details.
- Changing P001 may reset Output Function (P201). This applies to HART only.

7.3 P003 Measurement response

Sets the rate of response to level changes.

Related parameters	P003			Failsafe Timer P070 (minutes)	Max. measurement response P700/P701	Damping filter	Echo verification
Values	1	*	slow	100	0.1 m/minute	10.0 s	2
	2		medium	10	1 m/minute	10.0 s	2
	3		fast	1	10 m/minute	1.0 s	2

Note

Changing P003 resets the following parameters: P070, P700, P701, P709, and P711.

Use a setting just faster than the maximum filling or emptying rate (whichever is greater). Slower settings provide higher accuracy: faster settings allow for more level fluctuation.

- **Echo Verification (P711):** discriminates between agitator blades in motion (spurious noise) and the target surface (true echo).
- **Failsafe timer (P070):** establishes the period from the time a loss of echo (LOE) starts until the Failsafe default (P071) is triggered. P070 takes precedence over P003.

7.4 P004 Antenna type

Specifies the antenna type attached.

Values	240	*	rod antenna

7.5 P005 Units

Specifies measurement units used for dimensional values.

Values	1	*	meters
	2		centimeters
	3		millimeters
	4		feet
	5		inches

7.6 P006 Empty (process empty level)

Sets the distance from the reference point to the process empty level, in units selected at P005. For the reference point, see SITRANS Probe LR dimensions (Page 84).

Values	Range	0.0000 to 20.00 (m)
	Default	20.00 m (max. range)

Enter the distance from the reference point to Empty (process empty level), using units set in P005. Empty can be set to any distance: not necessarily the bottom of the vessel.

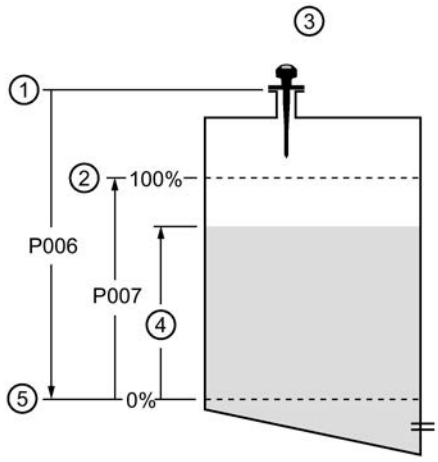

① Reference point
② Span
③ Level setup
④ Level
⑤ Empty

Note

- Default setting is maximum range.
- P006 and P007 are interlinked: see note attached to P007.

7.7 P007 Span (process full level)

Sets the range to be measured (referenced from Empty) in units selected at P005.

Values	Range	0.0000 to 20.00 (m)
	Default	19.56 (see note below)

Enter the distance between Empty (process empty level) and Span (process full level), in units set in P005. Span can be set at any distance above Empty level.

Note

- Setting P006 will reset Span, if it has not previously been set to a different value.
- The default setting for Span is based on Operation (P001) and Empty (P006). Span is set to Empty minus 110% of blanking distance, unless Operation is set to Distance (P001 = 3). In this case, Span is set to Empty distance. For more detail on blanking, see Near blanking (Page 87).
- Always prevent the monitored surface from approaching within 0.3 m (1 ft) of the reference point, as this is the minimum distance detectable.

7.8 P010 Language

Values	0	*	Numeric/None
	1		English
	2		German
	3		French
	4		Spanish

If a language is selected, parameter titles for the parameters P000 to P010 are displayed.

7.9 P050 to P055 Volume

Note

Factory settings are indicated by an asterisk (*) in the parameter tables, unless explicitly described.

Set SITRANS Probe LR to calculate readings based on reservoir volume instead of level.

1. Operation must be set to Level (P001 = 1).
2. Select a vessel shape matching the monitored vessel (P050).
3. If required, add dimensions A or L (as shown in the chart on page 45), using P052 and P053, or, if vessel shape 9 is selected, add level and volume breakpoints in P054 and P055.
4. Enter the value for the maximum vessel volume in P051.
5. Return to RUN mode: readings are now displayed in volumetric units. To select PERCENT, press [%]: the displayed volume reading will be a percentage of Maximum Volume.

7.10 P050 Vessel shape

Defines the vessel shape (see chart on next page) and allows SITRANS Probe LR to calculate volume instead of level. The default setting for P050 is 0 (volume calculation not required).

Enter the value for the vessel shape matching the monitored vessel or reservoir.

P050 Value		Vessel shape	Description	Also required
0	*	----	no volume calculation required	N/A
1		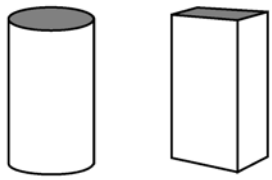	flat bottom	P051
2		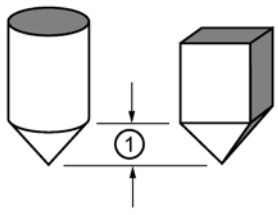	conical or pyramidal bottom	P051, P052
3		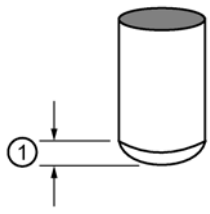	parabolic bottom	P051, P052
4		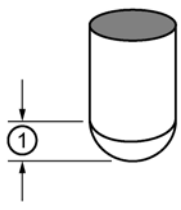	spherical bottom	P051, P052
5		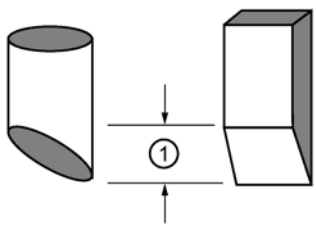	angled bottom	P051, P052
6		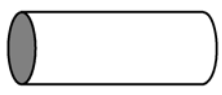	flat end cylinder	P051
7		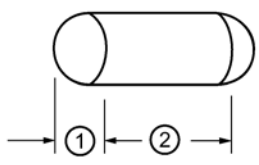	parabolic end cylinder	P051, P052, P053

P050 Value		Vessel shape	Description	Also required
8			sphere	P051
9		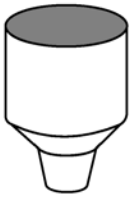	universal linear level/volume break-points	P051, P054, P055

7.11 P051 Maximum volume

For readings in volumetric units instead of percentage values, enter the vessel volume between Empty (P006) and Span (P007). Any volumetric units can be chosen, because the volume calculation is based on the maximum volume, and scaled according to the Vessel Shape (P050) value. If no value is entered, the default is 100, and the reading will be a percentage value.

Values	Range	0.0000 to 99999
	Default	100.0
Related parameters	P006 Empty P007 Span	

Enter the vessel volume between Empty (P006) and Span (P007).

1. Key in the value. (For example, if maximum volume = 3650 m^3, key in 3650.)
2. Press ENTER ↵.

If the value is too large for the LCD display, enter larger units.

Example: If maximum volume = 267,500 gallons, key in 267.5 (thousands of gallons).

7.12 P052 Vessel dimension A

Dimension A as used for P050 Vessel Shapes 2, 3, 4, 5, or 7, in P050 Vessel shape (Page 46).

Values	Range	0.0000 to 99999 in units (P005)
	Default	0.0
Related parameters	P050 Vessel Shape	

Enter one of the following, using the units selected in P005:

- Height of the vessel bottom if P050 = 2, 3, 4, or 5
- Length of one end-section of the vessel if P050 = 7

7.13 P053 Vessel dimension L

Dimension L as used in P050 Vessel Shape.

Values	Range	0.0000 to 99999 in units (P005)
	Default	0.0
Related parameters	P050 Vessel Shape	

Enter the vessel length L (excluding both end sections) if P050 = 7. Use the units selected in P005.

7.14 P054 Level breakpoints

When the vessel shape is too complex for any of the preconfigured shapes, you can define the shape as a series of segments. In P054 you assign a level value to each breakpoint. In P055 you assign a corresponding volume value to each breakpoint.

Primary index	P054	
Secondary index	Breakpoint number	
Values	Range	0.0000 to 99999 in units (P005)
	Default	0.0
Related parameters	P055 Volume Breakpoints	

Enter up to 32 level breakpoints, where the corresponding volume is known. The 100% and 0% levels must be entered. The breakpoints can be ordered from top to bottom, or the reverse.

1. First set P050 to 9.
2. Select P054.
3. The empty breakpoint value field appears, with the breakpoint number 01 in the auxiliary reading.

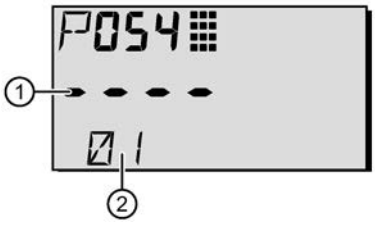

① Breakpoint value field
② Breakpoint number

4. Key in the level value for breakpoint 1, and press ENTER ↵. (Use units defined in P005.)
5. Press DISPLAY twice to focus control on the secondary index.
6. Press the UP ARROW ▲ key to display 02 in the auxiliary reading.

7. Key in the level value for breakpoint 2, and press ENTER ↵. (Use units defined in P005.)
8. Repeat steps 6 and 7 until level values have been entered for all the required breakpoints.

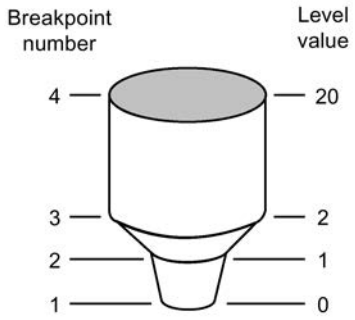

Breakpoint number	Level breakpoint (P054)	Volume breakpoint (P055)
1	0	0
2	4	500
3	8	3000
4	20	8000

7.15 P055 Volume breakpoints

Each segment defined by the level breakpoints (P054) requires a corresponding volume for SITRANS Probe LR to make the level-to-volume calculations.

Primary Index	P055	
Secondary Index	Breakpoint number	
Values	Range	0.0000 to 99999 in units
	Default	0.0000
Related parameters	P054 Volume Breakpoints	

Typical volume calculations:

Cone

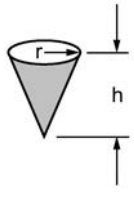

Cylinder

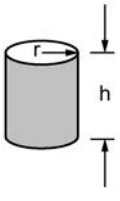

Enter a volume for each breakpoint defined in P054. (See illustrated example for P054 on the previous page.)

1. First set P050 to 9.
2. Select P055.
3. The empty breakpoint value field appears, with the breakpoint number 01 in the auxiliary reading.
4. Key in the volume for breakpoint 1, and press ENTER ↵. (Any volumetric units can be used: see note to P051.)
5. Press DISPLAY twice to focus control on the secondary index.
6. Press the UP ARROW ▲ key to display 02 in the auxiliary reading.
7. Key in the volume for breakpoint 2, and press ENTER ↵ .
8. Repeat steps 5 and 6 until volume values have been entered for all the required breakpoints.

7.16 P069 Unlocked value

Stores the value to enter in Lock (P000) to unlock programming. If P000 is locked, P069 will not display the Unlocked value.

Values	Range	1 to 9999
	Factory setting	1954
	----	Display when P000 is locked

Note

- Default setting for P000 is unlocked.
- After a new value has been stored at P069, that value will be recalled after a master reset (P999).
- Consult your Siemens representative, if you have forgotten the unlocked value.

7.17 Failsafe (P070 to P073)

Note

Factory settings are indicated by an asterisk (*) in the parameter tables, unless explicitly described.

7.17.1 P070 Failsafe timer

Note

The last valid reading is maintained until the Failsafe timer expires. After the timer expires, the reading is set based on P071.

Sets the time to elapse in minutes since the last valid reading, before Failsafe State activates.

Values	Range	0.00 to 720 min.
	Default	100.0 (based on P003)

7.17.2 P071 Failsafe material level

The material level to be reported when the Failsafe Timer expires. For more detail, see Failsafe (Page 91).

Values	1		Use Maximum mA Limit (P213) as material level
	2		Use Minimum mA Limit (P212) as material level
	3	*	Level remains at last reading
	4		User-selected value (defined in P073)

1. Enter the value corresponding to the level you want reported when the Failsafe Timer expires.
2. Press ENTER ↵.

7.17.3 P073 Failsafe level

Note

P071 must be set to User-selected value (4) to use this value.

Defines a user-defined level to report when the Failsafe timer expires.

Values	Range	3.6 mA to 22.6 mA
	Default	22.6 mA

7.18 mA output (P201 to P215)

Note

Factory settings are indicated by an asterisk (*) in the parameter tables, unless explicitly described.

7.18.1 P201 mA Output function

Alters the mA output/measurement relationship, and allows the output to be set independently from P001. If a HART master is connected, only the master can change the value.

Values	0		manual
	1	*	level
	2		space
	3		distance
	4		volume (only available if a tank shape has been selected at P050)

Note

- P201 is set independently from P001: set P001 first, as changing P001 will reset P201 to the same setting.
- P201 controls the primary value and the loop current for the HART common module and should not be changed if using HART.
- Selection also affects the secondary, tertiary, and quaternary variables for HART.
- P201 must be set to 0 (manual) before you can modify P911. Remember to restore the previous setting after using P911.

7.18.2 Independent mA setpoint parameters (P210 and P211)

P210 and P211 allow you to explicitly define the normal operating range. Use these features to reference the minimum and/or maximum mA output to any point in the measurement range.

For HART, 4 mA and 20 mA represent the upper and lower range limits for the primary variable.

P201 (mA Function) Settings	Response for P210 and P211
Level, Space, or Distance	Key in the material level in Units (P005) or percent[1)] of Span (P007) as referenced from Empty (P006).
Volume	Key in the volume in Maximum Volume (P051) units or as a percent[1)] of Maximum Volume.

[1)] Ensure the % symbol is displayed before entering a % value.

7.18.2.1 P210 4 mA setpoint (low output)

Note

P210 is used to set the 4 mA loop current for the HART common module.

Sets the process level corresponding to the 4 mA value. 4 mA always defaults to 0, and P201 determines whether this is a Level, Space, Distance, or Volume measurement. Level and Space are measured as a percentage of Span; Distance is measured as a percentage of Empty.

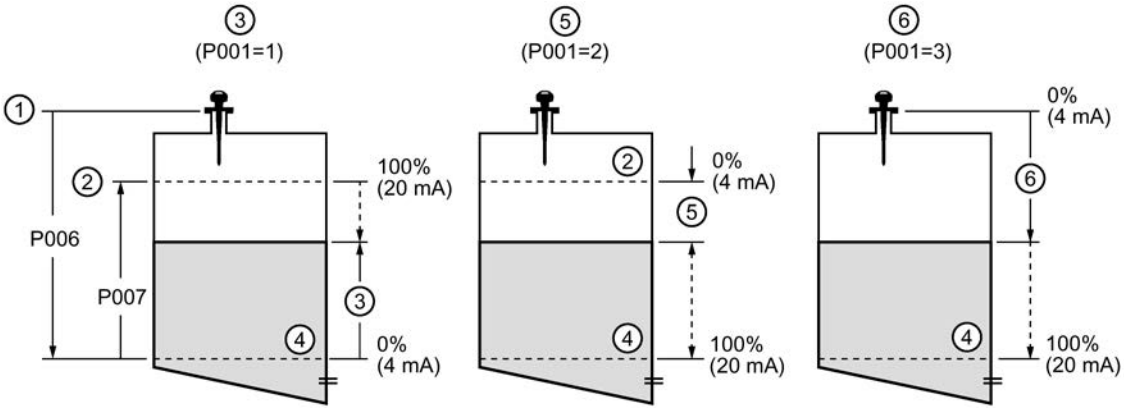

① Reference point
② Span
③ Level
④ Empty
⑤ Space
⑥ Distance

Values	Range	–99999 to 99999
	Default	0.000 m (set to 0% as defined by P201: mA Output Function)
Related parameters	P201: mA Output Function	

Enter the reading that is to correspond to a 4 mA output. Use percent or units, depending on the setting for P051.

7.18.2.2 P211 20 mA setpoint (high output)

Note

P211 is used to set the 20 mA loop current for the HART common module.

Sets the process level corresponding to the 20 mA value. 20 mA always defaults to 100%, and P201 determines whether this is a Level, Space, or Distance measurement. Level and Space are measured as a percentage of Span: Distance is measured as a percentage of Empty.

Values	Range	–99999 to 99999
	Default	19.56 m (set to 100% as defined by P201: mA Output Function)
Related parameters	P201: mA Output Function	

Enter the reading that is to correspond to a 20 mA output. Use percent or units, depending on the setting for P051.

7.18.3 mA output limit parameters (P212 and P213)

Note

Factory settings are indicated by an asterisk (*) in the parameter tables, unless explicitly described.

P212 and P213 allow you to explicitly set a failsafe current outside the normal operating range.

7.18.3.1 P212 Minimum mA limit

Prevents the mA output from dropping below this minimum level for a measurement value. This does not restrict the Failsafe or manual settings.

Values	Range	3.8 to 20.5 (mA)
	Default	3.8 (mA)

7.18.3.2 P213 Maximum mA limit

Prevents the mA output from rising above this maximum level for a measurement value. This does not restrict the Failsafe or manual settings.

Values	Range	3.8 to 20.5 (mA)
	Default	20.5 (mA)

7.18.4 P214 4 mA output trim

Note

This parameter is for use only by Siemens service personnel.

Calibrates the 4 mA output.

7.18.5 P215 20 mA output trim

Note

This parameter is for use only by Siemens service personnel.

Calibrates the 20 mA output.

7.19 Installation records (P341 to P346)

Note

Factory settings are indicated by an asterisk (*) in the parameter tables, unless explicitly described.

7.19.1 P341 RUN time

Displays the number of uninterrupted 24 hour periods that the device has been operating.

Values (view only)	Range	0 to 99999 (days)
	Default	0
Related parameters	P342 Power-on Resets	

P341 is updated once a day.

- If power is cycled before 24 hours have passed, the run time will not be updated.
- If an instrument is powered down on a regular basis, P341 will not have an accurate value.

7.19.2 P342 Power-on resets

The number of times power has been applied since the date of manufacture.

Values (view only)	Range	0 to 99999 (days)
Related parameters	P341 RUN Time	

This parameter is updated every time the instrument is reset or is powered up.

7.19.3 P343 Internal temperature

WARNING

Internal temperature

Internal temperature must not exceed 80 °C (176 °F).

Displays (in degrees C) either the current temperature on the circuit board, or the maximum or minimum temperature recorded by the internal sensor. The high and low values are maintained over a power cycle.

Values (view only)	Range	–50 °C to 150 °C
	1	Current temperature
	2	Maximum temperature
	3	Minimum temperature

7.19.4 P346 Serial number

Displays the serial number of the instrument. The numbers stored in Index 2, followed by the numbers stored in Index 1, give you the complete serial number.

	Index 2	Index 1	
Values (view only)	Range: 00000 to 99999	Range: 00000 to 99999	
Example: 1503010	15	03	010

7.20 Range calibration (P652 to P655)

Note

Factory settings are indicated by an asterisk (*) in the parameter tables, unless explicitly described.

7.20.1 P652 Offset correction

A fixed offset value that is added to the reading as a correction to the measurement.

Values	Range	–99999 to 99999
	Default	0.000

7.20.2 P655 Propagation factor

The value used to compensate for changes in microwave velocity due to propagation within a metal stillpipe, instead of in free space.

Values	Range	0.3000 to 1.5000
	Default	1.000

Pipe size (I.D.)	Propagation Factor[1)]
50 mm (2”)	0.827
80 mm (3”)	0.915
100 mm (4”)	0.955
150 mm (6”)	0.980
200 mm (8”)	0.990

[1)] Contact your Siemens representative for other sizes and propagation factor numbers.

The propagation factor is constant for a given pipe diameter, or can be determined by comparing the radar distance reading to the actual process material distance (measured from the reference point). For the reference point, see SITRANS Probe LR dimensions (Page 84).

Example:

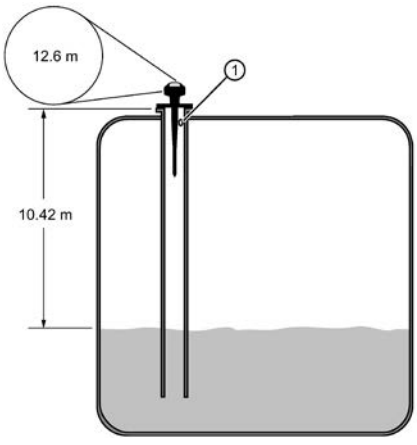

① SITRANS Probe LR distance

Actual distance / SITRANS probe LR distance= p.f. (propagation factor)

Using the readings shown:

10.42 m / 12.6 m = 0.827

Enter the propagation factor: 0.827

7.21 Rate (P700 and P701)

Note

Factory settings are indicated by an asterisk (*) in the parameter tables, unless explicitly described.

These parameters determine how material level changes are reported.

7.21.1 P700 Maximum fill rate

Allows you to further adjust the SITRANS Probe LR response to increases in the actual material level (or an advance to a higher Failsafe Material Level, P071). P700 is automatically updated whenever Measurement Response (P003) is altered.

Values	Range	0.0000 to 99999 m/min
	Factory setting	0.1
Altered by	P003 Measurement response	
Related parameters	P005 Units P007 Span P071 Failsafe material level	

Enter a value slightly greater than the maximum vessel-filling rate, in Units (P005) or percent of Span (P007) per minute.

P003 value	Meters/minute
1	0.1
2	1
3	10

7.21.2 P701 Maximum empty rate

Adjusts the SITRANS Probe LR response to decreases in the actual material level (or an advance to a lower Failsafe Material Level, P071). P701 is automatically updated whenever Measurement Response (P003) is altered.

Values	Range	0.0000 to 99999 m / min
	Factory setting	0.1
Altered by	P003 Measurement Response	
Related parameters	P005 Units P007 Span P071 Failsafe Material Level	

Enter a value slightly greater than the vessel's maximum emptying rate, in Units (P005) or percent of Span (P007) per minute.

P003 value	Meters/minute
1	0.1
2	1
3	10

7.22 Measurement verification (P709 to P713)

Note

Factory settings are indicated by an asterisk (*) in the parameter tables, unless explicitly described.

7.22.1 P709 Damping filter

Stabilizes the reported level within the Echo Lock Window (P713) in the event of level fluctuations (for example, a rippling or splashing liquid surface). The value is in seconds, and depends on the number of seconds it takes the device to reach 63% of a step value change in reading.

Values	Range	0 to 100 seconds (0=off)
	Default	10.0 seconds
Altered by	P003 Measurement response	
Related parameters	P007 Span P713 Echo lock window	

The value is automatically altered when Measurement Response Speed (P003) changes. The higher the value entered, the greater the range of stabilized fluctuation.

7.22.2 P711 Echo lock

Note

Ensure the agitator is always running while SITRANS Probe LR is monitoring the vessel, to avoid stationary blade detection.

Use this feature to select the measurement verification process.

Values	0		Off
	1		Maximum verification
	2	*	Material agitator
	3		Total lock
Related parameters	P700 Maximum Fill Rate P701 Maximum Empty Rate P712 Echo Lock Sampling P713 Echo Lock Window P820 Algorithm		

If a material agitator or mixer is used in the monitored vessel, set Echo Lock for Maximum Verification or Material Agitator, to avoid agitator blade detection.

- When Maximum Verification or Material Agitator is selected, a new measurement outside the Echo Lock Window (P713) must meet the sampling criterion (P712).
- When Total Lock is selected, Echo Lock Window (P713) is pre-set to 0.

SITRANS Probe LR continuously searches for the best echo according to the algorithm chosen (P820). If the selected echo is within the window, the window is then centered about the echo. If not, the window widens with each successive shot until the selected echo is within the window. The window then returns to its normal width.

When Echo Lock is Off, SITRANS Probe LR responds immediately to a new measurement, as restricted by the Maximum Fill / Empty Rate (P700 / P701). However, measurement reliability is affected.

7.22.3 P712 Echo lock sampling

Note

Resetting P711 returns P712 to the respective pre-set values.

The sampling criterion sets the number of consecutive echoes that must appear above or below the echo currently locked onto, before the measurements are validated as the new reading. (Echo Lock P711 must be set to 1 or 2.

Values	Format	x:y x = the number of above echoes y = the number of below echoes
	Range	1:1 to 50:50
Related parameters	P711 Echo Lock	

P711 default value		Description	P712 pre-set value
1		maximum verification	5:5
2	*	material agitator	5:2

Example:

- Set P711 to 2 (material agitator)
- The preset values for P712 in this case are 5:2
- Result: a new reading will not be validated unless 5 consecutive measurements higher or 2 consecutive measurements lower than the current reading occur.

7.22.4 P713 Echo lock window

Note

The echo lock window is stored as standard samples, but displayed in units based on P005. Any value entered for P713 will be rounded to the nearest sample.

Adjusts the size of the Echo Lock Window. This value is automatically altered when Measurement Response (P003), Maximum Fill Rate (P700), or Maximum Empty Rate (P701), are altered.

Values	Range	0.000 to 9999
	Default	0.000
Altered by	P003 Measurement response	
Related parameters	P005 Units P711 Echo lock	

The Echo Lock Window is a "distance window"[1)], centered on the echo used to derive the reading. When a new measurement falls within the window, the window is re-centered and the new reading calculated. Otherwise, the new measurement is verified by Echo Lock (P711) before the reading is updated.

When the value is 0, the window is automatically calculated after each measurement. The value is fixed at 0 if Echo Lock (P711) is set to 3.

- For slower Measurement Response values (P003), the window is narrow.
- For faster P003 values the window becomes progressively wider.

[1)] Units are those set in P005.

7.23 P752 HART address

Note

Accessible via the handheld programmer only by keying in P752.

Sets the device address or poll ID on a HART network. Any address other than 0 will cause the output current to be a fixed value, and the current will not indicate the reading.

Values	Range	0 to 15 Enter 0 for single transmitter installation; enter digit other than 0 for multi-drop applications. (Default: 0)

7.24 Communications (P799)

7.24.1 P799 Communications control

Enables the read/write access to parameters via remote communications.

Values	0		Read only
	1	*	Read/write
	2		Restricted access - read only except for P799 which is read/write

Note

- P799 controls the access if you are using a HART master.
- P000 controls the lock access if you are using the Siemens handheld programmer.

7.25 Echo processing (P800 to P807)

Note

Factory settings are indicated by an asterisk (*) in the parameter tables, unless explicitly described.

The following parameters are for authorized Siemens Service personnel or technicians familiar with Siemens echo processing techniques. View the echo profile first, using SIMATIC PDM, before attempting to modify these parameters.

7.25.1 P800 Near blanking

Defines the distance from the reference point to be ignored by the transmitter/receiver.

Values	Range	0.00 to 20 (m: selected in P005)
	Default	0.30 m (plus the shield length)
Related parameters	P006 Empty P007 Span P838 Auto False-Echo Suppression Distance	

To extend the blanking beyond the minimum default, enter a value in units.

7.25.2 P801 Range extension

Note

Maximum range extension depends on the setting for P006 (Empty).

Allows the material level to drop below Empty (process empty level), without generating an LOE state.

Values	Range	0 to 1000%
	Default	5.000 (% of Span)
Related parameters	P006 Empty P007 Span	

Use this feature if the surface monitored can drop below Empty level (P006) in normal operation. The value for P801 is added to Empty, and the sum can be greater than the range of the antenna. Range Extension can be increased (in Units or percent of Span) to a point where Empty plus Range Extension is greater than the distance from the flange face to the furthest surface to be monitored. The distance below empty is not blanked.

- Enter the value as a percentage of P006.
- For vessels with conical or parabolic bottoms, increase the value for P801 to ensure that an empty vessel reads Empty.

7.25.3 P804 Confidence threshold

Determines which echoes are evaluated by software.

Values	Range	0 to 99
	Default	5
Related parameters	P070 Failsafe timer	

P804 sets the minimum echo confidence that the echo must meet in order to prevent a Loss of Echo condition and the expiration of the Failsafe timer (P070). When Echo Confidence (P805) exceeds the Confidence Threshold, the echo is evaluated.

7.25.4 P805 Echo confidence

Measures echo reliability. It displays the echo confidence of the measurement echo from the last measurement. P804 defines the minimum criterion for echo confidence.

Values (view only)	Range	0 to 99
	----	Shot not used
Related parameters	P804 Confidence threshold	

Press the measurement key to get a new reading that will update confidence values.

7.25.5 P806 Echo strength

Displays the absolute strength (in dB above 1 µV rms) of the echo selected as the measurement echo.

Values (view only)	Range	-20 to 99

Press the measurement key to get a new reading that will update echo strength.

7.25.6 P807 Noise

Displays the average and peak ambient noise (in dB above 1 µV rms) of a noise profile, as x.y. Noise level is a combination of transient noise and receiving circuitry.

Values (view only)	Format	x.y x = average y = peak
	Range	–20 to 99
	Start up display	–15 . – 15

After a measurement, the values from the previous noise shot will be displayed. Press the measurement key to get a new reading that will update the noise profile.

7.26 Algorithm (P820)

7.26.1 P820 Echo algorithm

Selects the algorithm to be applied to the echo profile to extract the true echo.

Values	3		Largest echo
	4		Reserved
	8		Best of Largest or First echo
	12	*	First echo

For more clarification on the different options, please contact your local representative.

7.27 TVT (Time Varying Threshold) adjustment parameters (P831 to P839)

Note

Factory settings are indicated by an asterisk (*) in the parameter tables, unless explicitly described.

First SITRANS Probe LR learns the echo profile. Then the learned profile, or part of the learned profile, is used to screen out false echoes.

The following parameters are for authorized Siemens Service personnel or technicians familiar with Siemens echo processing techniques. View the echo profile first, before attempting to modify these parameters.

7.27.1 P831 Manual TVT Shaper

Note

This parameter is for use only by Siemens service personnel.

Turns the TVT Shaper ON or OFF.

7.27.2 P832 Manual TVT Shaper Adjust

Note

This parameter is for use only by Siemens service personnel.

7.27.3 P837 Auto false echo suppression

Note

- P837 and P838 should be used together to adjust the TVT (Time Varying Threshold) curve.
- Use this function only if there is a minimum distance of 2 meters (6.5 feet) from the reference point to the material.
- Set P837 and P838 during start up, if possible.
- If the vessel contains an agitator, the agitator should be running.

P837 instructs SITRANS Probe LR to learn the echo profile at that moment, and use the learned profile instead of the default TVT curve.

Parameter	Values		Description
P837	0		Off
	1	*	Use "learned" TVT
	2		"Learn"

If SITRANS Probe LR displays a full level, or if the reading fluctuates between a false high level and a correct level, you can use the TVT shaper parameters P837 and P838 together to prevent false-echo detection. They elevate the TVT in this region and de-sensitize the receiver from any ‘base noise" caused by internal antenna reflections, nozzle echoes, or other vessel false echoes. For more detail, see Auto false-echo suppression (Page 88).

Setup instructions for P837 and P838 follow P838.

7.27.4 P838 Auto false echo suppression distance

Allows you to set a distance within which SITRANS Probe LR will learn a new echo profile. (Units are defined in P005.)

Values	Range	0.000 to 20.00 m (65.6 ft): max. range
	Default	1.000 m

P837 and P838 setup instructions:

1. Perform this function when the vessel is empty or nearly empty.
2. Rotate the instrument for best signal (lowest false-echo amplitude).
3. Determine distance from reference point to material level, and subtract 0.5 m/1.6ft.
4. Press PROGRAM then DISPLAY .
5. Select P838, key in [distance to material level minus 0.5m/1.6 ft], and press ENTER .
6. Select P837.
7. Press 2 and then press ENTER . P837 will automatically revert to 1 (use Learned TVT) after a few seconds.
8. Press PROGRAM to return to RUN mode.

Display before Auto false-echo suppression (or when P837=0)

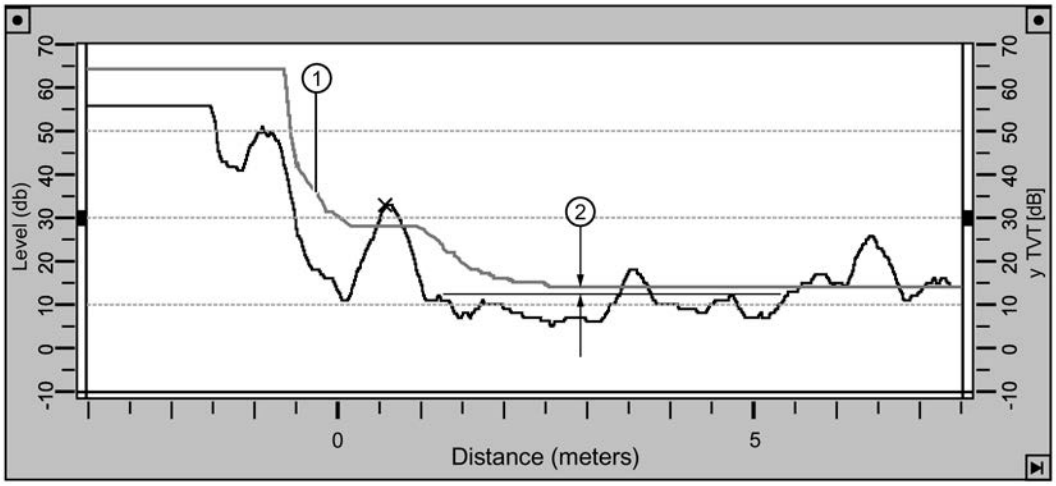

① Default TVT
② P839 Hover level

Example after auto false-echo suppression

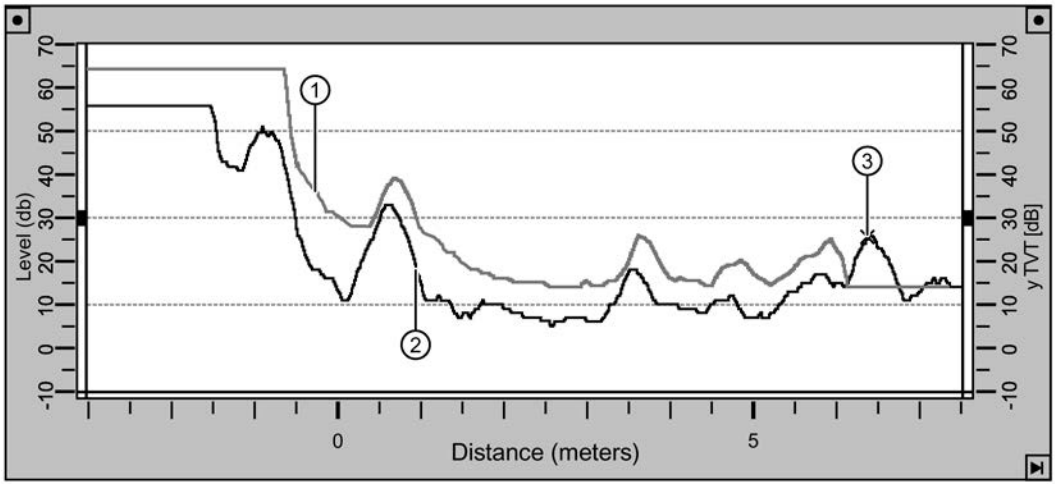

① TVT curve (learned)
② False echo
③ Material level

7.27.5 P839 TVT hover level

Defines (in percent) how high the TVT curve is placed above the profile, relative to the largest echo. When SITRANS Probe LR is located in the center of the vessel, lower this parameter to prevent multiple echo detections.

Values	Range	0 to 100%
	Default	40

7.28 Test (P900 to P924)

7.28.1 P900 Software revision number

Displays the software revision level.

Values (view only)	Range	0.00 to 99.99
	1	Main code revision
	2	Primary boot revision
	3	Alternative boot revision
	3	Hardware stack revision
	Default	Determined by the software revision installed

7.28.2 P901 Memory test

Press ENTER ↵ to activate the test.

Values (view only)	PASS	Memory text successful
	F1	Fail RAM
	F2	Fail EEPROM
	F3	Fail FLASH

7.29 Measurement

7.29.1 P911 mA output value (HART/mA only)

Access this parameter to display the current value of the mA output.

Values (HART)	Range	3.6 to 22.6 (mA)
	*	4 mA in HART fixed current mode

1. Set P201 to 0 (manual).
2. Enter a test value.

Note

P201 must be set to 0 to enable the test value to be entered at P911. After the test, restore P201 to the previous setting.

7.29.2 P920 Reading measurement

P920 corresponds to the final reading after all programming is applied. It is a copy of one of P921 to P924, depending on the setting for Operation (P001).

	Operation P001		Source parameter for P920
	0	Off	----
	1	Level	P921 if P050 = 0, otherwise P924
	2	Space	P922
	3	Distance	P923
P920 Values (read only)	Range	–99999 to 99999 (dimensional units, if volume has not been selected)	

7.29.3 P921 Material measurement

Displays the distance between Empty/process empty level (P006) and the monitored surface, in Units (P005) or percent of Span (P007).

Values (view only)	Range	–99999 to 99999

7.29.4 P922 Space measurement

Displays the distance between the monitored surface and Span / process full level (P007).

Values (view only)	Range	–99999 to 99999

7.29.5 P923 Distance measurement

Displays the distance between the monitored surface and the reference point. For the reference point for the standard model, see SITRANS Probe LR dimensions (Page 84).

Values (view only)	Range	–99999 to 99999

7.29.6 P924 Volume measurement

Note

The display for P924 reads - - - -, when volume calculation is not enabled at P050 (P050 = 0).

The calculated vessel capacity in Maximum Volume (P051) or percent of Maximum Volume (volume calculation must be enabled at P050).

Values (view only)	Range	–99999 to 99999
Related parameters	P051 Maximum volume P050 Vessel shape	

7.29.7 P999 Master reset

Note

Following a Master Reset, complete reprogramming is required.

Resets all parameters to their factory settings, with the following exceptions:

- P000 and P069 are not reset.
- The learned TVT curve is not lost.

Use this feature after upgrading software:

1. Select P999.
2. Press CLEAR [c] then ENTER [↵] to clear all and initiate reset.
3. Reset complete. (Note: Reset takes several seconds to complete.)

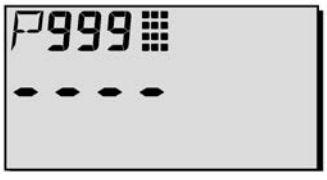

Service and maintenance 8

⚠ WARNING
Impermissible repair and maintenance of the device • Repair and maintenance must be carried out by Siemens authorized personnel only.

8.1 Maintenance and repair work

SITRANS Probe LR requires no maintenance or cleaning under normal operating conditions.

Under severe operating conditions, the antenna may require periodic cleaning. If cleaning becomes necessary:

- Note the antenna material and the process medium, and select a cleaning solution that will not react adversely with either.
- Remove the instrument from service and wipe the antenna clean using a cloth and suitable cleaning solution.

8.2 Return procedure

Enclose the bill of lading, return document and decontamination certificate in a clear plastic pouch and attach it firmly to the outside of the packaging.

Required forms

- Delivery note
- Return goods delivery note (http://www.siemens.com/processinstrumentation/returngoodsnote)

  with the following information:

  – Product (item description)

  – Number of returned devices/replacement parts

  – Reason for returning the item(s)
- Decontamination declaration (http://www.siemens.com/sc/declarationofdecontamination)

  With this declaration you warrant "that the device/replacement part has been carefully cleaned and is free of residues. The device/replacement part does not pose a hazard for humans and the environment."

  If the returned device/replacement part has come into contact with poisonous, corrosive, flammable or water-contaminating substances, you must thoroughly clean and decontaminate the device/replacement part before returning it in order to ensure that all hollow areas are free from hazardous substances. Check the item after it has been cleaned.

  Any devices/replacement parts returned without a decontamination declaration will be cleaned at your expense before further processing.

8.3 Disposal

Devices described in this manual should be recycled. They may not be disposed of in the municipal waste disposal services according to the Directive 2012/19/EC on waste electronic and electrical equipment (WEEE).

Devices can be returned to the supplier within the EC, or to a locally approved disposal service for eco-friendly recycling. Observe the specific regulations valid in your country.

Further information about devices containing batteries can be found at: Information about battery/product return (WEEE) (https://support.industry.siemens.com/cs/document/109479891/)

Troubleshooting 9

9.1 General fault codes

Note

- The General Fault Codes were revised with Firmware Revision 3.02. If your device has earlier firmware, see Fault codes (firmware revision 1.05 or earlier) (Page 76).
- Some faults cause the device to go to Failsafe mode (Fault 52). These are indicated with an asterisk (*).

9.2 Fault codes (firmware revision 3.02 or higher)

Note

Some faults cause the device to go to Failsafe mode (Fault 34). These are indicated with an asterisk (*).

Code		Meaning	Corrective action
S:0	*	The device was unable to get a measurement within the Failsafe Timer period. Possible causes: faulty installation, antenna buildup, foaming/other adverse process conditions, invalid calibration range.	Ensure installation details are correct. Ensure no antenna buildup. Adjust process conditions to minimize foam or other adverse conditions. Correct range calibration. If fault persists, contact your local Siemens representative.
S:2	*	The device is operating in a low power condition that is outside its operating range. As a result, a valid measurement has not been taken for the failsafe timer period, and the device will be put into failsafe mode.	Correct the power supply (resistance or voltage).
S:3		Device is nearing its lifetime limit according to the value set in Maintenance Required Limit.	Replacement is recommended.
S:4		Device is nearing its lifetime limit according to the value set in Maintenance Demanded Limit.	Replacement is recommended.
S:6		Sensor is nearing its lifetime limit according to the value set in Maintenance Required Limit.	Replacement is recommended.
S:7		Sensor is nearing its lifetime limit according to the value set in Maintenance Demanded Limit.	Replacement is recommended.
S:8		Service interval as defined in Maintenance Required Limit has expired.	Perform service.
S:9		Service interval as defined in Maintenance Demanded Limit has expired.	Perform service.
S:11		Internal temperature sensor failure.	Repair required: contact your local Siemens representative.

S:12		Internal temperature of device has exceeded specifications: it is operating outside its temperature range.	Relocate device and/or lower process temperature enough to cool device. Inspect for heat related damage and contact your local Siemens representative if repair is required.
S:17		Calibration interval as defined in Maintenance Required Limit has expired.	Perform calibration.
S:18		Calibration interval as defined in Maintenance Demanded Limit has expired.	Perform calibration.
S:28	*	Internal device failure caused by a RAM memory error.	Repair required: contact your local Siemens representative.
S:29	*	EEPROM damaged.	Repair required: contact your local Siemens representative.
S:31	*	Flash error.	Repair required: contact your local Siemens representative.
S:33	*	Factory calibration for the internal temperature sensor has been lost.	Repair required: contact your local Siemens representative.
S:34	*	Factory calibration for the device has been lost.	Repair required: contact your local Siemens representative.
S:35	*	Factory calibration for the device has been lost.	Repair required: contact your local Siemens representative.
S:36	*	Unable to start microwave module.	Reset power. If error persists, contact your local Siemens representative.
S:37	*	Measurement hardware problem.	Reset power. If error persists, contact your local Siemens representative.
S:38	*	Failure in the device electronics.	Reset power. If fault persists, contact your local Siemens representative: repair required.
S:43	*	Factory calibration for the radar receiver has been lost.	Repair required: contact your local Siemens representative.
S:44	*	Factory calibration for the echo slope has been lost.	Repair required: contact your local Siemens representative.
S:45	*	No valid boot program detected: firmware corrupt.	Repair required: contact your local Siemens representative.
S:48	*	User configuration is invalid. One or more of parameters: Span, Volume breakpoints, and/or Auto False-Echo Suppression, are set to invalid values.	Reconfigure the unit. Ensure Span (P007) is not set to 0; check the breakpoints (only required if P050 is set to 9); do a P999 reset.
S:49	*	EEPROM corrupt.	Repair required: contact your local Siemens representative.
S:50	*	EEPROM corrupt.	Repair required: contact your local Siemens representative.
S:51	*	EEPROM corrupt.	Repair required: contact your local Siemens representative.

S:52		Failsafe is activated. Possible causes: 1) hardware failure; 2) memory failure; 3)Fault 48; 4) failsafe timer expired– possible causes: faulty installation, antenna buildup, foaming/ other adverse process conditions, invalid calibration range.	For 3) and 4) Correct configuration; ensure installation is correct; no antenna buildup; adjust process conditions to minimize foaming/ other adverse conditions; correct calibration range. If fault persists, or for 1) and 2), contact your local Siemens representative.
S:53	*	Configuration lost: one or more parameter settings have been lost. This may occur after a firmware upgrade causes user parameters to be reset.	Restore user parameters using SIMATIC PDM.

9.3 Fault codes (firmware revision 1.05 or earlier)

Note

Some faults cause the device to go to Failsafe mode (Fault 34). These are indicated with an asterisk (*).

Code		Meaning	Corrective action
13	*	User configuration has been lost. This may occur after a software upgrade causes user parameters to be reset.	Use PDM to restore the user parameters.
17		Standard device error category[1)].	None
18		Standard device error category[1)]. This device has a single power supply: if it fails, the device is non-operational, and the fault will not be visible.	None
19	*	User configuration is invalid: device cannot operate. Parameters: Span, Volume breakpoints, and/or Auto False-Echo Suppression, are set to invalid values. Note: EEPROM Corrupted. If the parameter section of the EEPROM is corrupt, the device will not have a valid configuration, and will also show fault 39 and/ or fault 40, and fault 34 (failsafe).	Check parameter settings for configuration errors, especially: Check Span is not set to 0. Check the breakpoints (only tested if P050 is set to 9). Do a P999 reset.
22		There is a maintenance issue on the device. Standard device error category[1)]; currently no maintenance faults are activated.	None
23		Standard device error category[1)], not supported.	None
25		The following problem has occurred in the electronics of the device: DMA failure	Cycle the power: this may temporarily solve the problem. Do not use the device for measurement, but return it to the factory as soon as possible.
26	*	A mechanical failure in the device, such as a broken cable.	None
27		Standard device error category[1).]	None
28		Internal temperature of the device has been exceeded: it is operating outside its temperature range.	Lower the ambient temperature enough to cool the device.

29		During a memory check, a problem with the memory has occurred. Explanation: The device periodically validates RAM, Flash, and EEPROM memory. If any fault is found, Fault 29 is displayed. Potential causes are: normal wear and tear operating outside temperature range other electrical damage	Replace unit.
30	*	The device was unable to get a measurement for the failsafe timer period.	Check the application and echo profile, to determine optimum configuration for the application, to ensure the device can obtain a measurement.
31	*	The device has failed to initialize itself properly.	Reset the device. If the problem persists, check for the presence of another fault and take corrective action on this fault. If the problem persists, call the factory.
32	*	The device is not calibrated. All devices must be fully calibrated in the factory.	Return device to factory.
34		Failsafe is activated. The output current is set to the failsafe behavior. The reason for the failsafe will be indicated by the presence of at least one other fault.	Determine the other fault (alternating on the display, or in the diagnosis/status word in communication master) and take corrective action on that fault.
35		Internal device failure caused by a memory error.	The fault should never appear. If it does, the device should reset itself and there is no action to be taken, It should be reported to the factory.
38	*	The internal EEPROM has become corrupted[2)], or was not configured properly at the factory.	Replace product
39	*	The internal EEPROM has become corrupted[3)], or was not configured properly at the factory.	Replace product
40	*	The internal EEPROM has become corrupted[2)], or was not configured properly at the factory.	Replace product
41	*	The internal EEPROM has become corrupted2), or was not configured properly at the factory.	Replace product
42	*	The device is operating in a low power condition that is outside its operating range. As a result, a valid measurement has not been taken for the failsafe timer period, and the device will be put into failsafe mode.	Correct the power supply (resistance or voltage).

[1)] The error will never occur on this device, but is included to complete the list and match industry standards.

[2)] EEPROM can become corrupted due to operating the device outside its operating range (power and temperature), or other damage.

[3)] EEPROM can become corrupted due to operating the device outside its operating range (power and temperature), or other damage.

9.4 Operation troubleshooting

Symptom	Cause	Action
Display flashes LOE and status symbol shows	level or target is out of range	• check specifications • check P006 • increase range extension P805
Display flashes LOE and status symbol shows	material build-up on antenna	• clean antenna • re-locate SITRANS Probe LR
Display flashes LOE and status symbol shows	location or aiming: • poor installation • flange not level	• check to ensure nozzle is vertical • Use P837/P838 • check to ensure nozzle is clean and free of internal seams/welds
Display flashes LOE and status symbol shows	antenna malfunction: • temperature too high • physical damage • excessive foam • multiple echoes	• check P343 • use foam deflector or stilling well • relocate • use a defoamer • set P820 to 12 (First echo)
Reading does not change, but the level does	SITRANS Probe LR processing wrong echo, i.e. vessel wall, or structural member	• re-locate SITRANS Probe LR • check nozzle for internal burrs or welds • rotate instrument 90° • use P837/P838
Level reading on Display is correct but Loop is stuck on 4 mA	Basic configuration data is questionable	• set POLL ADR to 0 if not using HART multi-drop
Measurement is consistently off by a constant amount	P006 not correct P652 not correct	• check distance from reference point to zero level (P006) • check offset value (P652)
Screen blank	power error	• check nameplate rating against voltage supply • check power wiring or source

Symptom	Cause	Action
	too much load resistance	• change barrier type, or • remove something from the loop, or • increase supply voltage
Reading erratic	echo confidence weak	• refer to P805 • use P837/P838 • use foam deflector or stilling well
	liquid surface vortexed	• decrease measurement response P003 • relocate instrument to side pipe • increase confidence threshold P804
	material filling	re-locate SITRANS Probe LR
Reading response slow	P003 setting	increase measurement response if possible
Reads correctly but occasionally reads high when vessel is not full	• detecting close range echo • build up near top of vessel or nozzle • wrong antenna choice for application • vessel nozzle problem	• clean the antenna • longer shield required • use P837/P838
Level reading lower than material level	• material is within near blanking zone • vessel near empty and low ε_r material • multiple echoes processed	• decrease blanking P800: min. 0.3 m (1 ft) plus the shield length (if any) • raise SITRANS Probe LR • decrease range extension • ensure P820 is set to 12 (First echo)
	nozzle too narrow for length	shielded antenna required: discuss with your Siemens representative.
	internal seam in nozzle	• inspect and remove seam • use P837/P838 • longer shield required

Technical data 10

Note

Device specifications

Siemens makes every attempt to ensure the accuracy of these specifications but reserves the right to change them at any time.

Note

Operating temperature

Check the ambient and operating temperatures under Construction (Page 82) and Approvals (Page 83). Also check Approvals (Page 83) for the specific configuration you are about to use or install.

10.1 Power

Note

Nominal 24 V DC at max. 550 Ohm. For other configurations, see the chart Loop voltage versus loop resistance (Page 100).

- Maximum 30 V DC
- 4 to 20 mA

10.2 Performance

Performance[1)]

Reference operating conditions according to IEC 60770-1		
	Ambient temperature	+15 to +25 °C (+59 to +77 °F)
	Humidity	45% to 75% relative humidity
	Ambient pressure	860 to 1060 mbar g (86000 to 106000 N/m^2 g)
Measurement Accuracy (measured in accordance with IEC 60770-1)		
	From end of antenna to 600mm (1.96ft)	40mm (1.57")
	Remainder of range	the greater of: 10 mm (0.4"), or 0.10% of Span
Analog Output Accuracy (measured in accordance with IEC 60770-1)		
	Non-linearity (accuracy)	0.125% of Span (including hysteresis and nonrepeatability)
	Non-repeatability	0.025% of Span (included in non-linearity specification)
	Deadband (resolution)	0.0375% of Span (included in non-linearity specification)
Frequency		C-band, approx. 6 GHz
Max. measurement range[2)]		20 m (65 ft)
Update time		mA output and loop display is updated once per second
Minimum detectable distance[2)]		0.3 m (1 ft), plus the shield length (if any)
Influence of ambient temperature		0.003% / K
Dielectric constant		εr > 3
Memory		• non-volatile EEPROM • no battery required.

1) Under specific strong electromagnetic fields the output can vary < +/- 0.5% of maximum range.

2) Referenced from the sensor reference point.

10.3 Construction

Process connections	threaded connection	1.5” NPT, BSP, or G (BS EN ISO 228-1)
Antenna	polypropylene rod	hermetically sealed construction standard 100 mm (4") shield for maximum 100 mm (4") nozzle, or optional 250 mm (10") long shield

Note

- Check the ambient and operating temperatures under Enclosure (below) and Approvals (Page 83) for the specific configuration you are about to use or install.
- Approved dust-tight and water-tight conduit seals are required for outdoor Type 4X, Type 6, IP67, IP68 locations.

Enclosure	body construction	PBT (polybutylene terephthalate)
	lid construction	hard-coated PEI (polyether imide)
	conduit entry	2 x M20x1.5 (plastic strain relief) or 2 x 1/2" NPT thread
	ingress protection	Type 4X, Type 6, IP67, IP68 (see note below)
Weight	standard model[1)]	1.97 kg (4.35 lb.)

[1)] Unit with 100 mm (4") rod and adaptors

10.4 Operating conditions

Location	indoor/outdoor
Altitude	5000 m (16,404 ft) max.
Ambient temperature	−40 to +80 °C (−40 to +176 °F)
Relative humidity	suitable for outdoor Type 4X, Type 6, IP67, IP68 enclosure
Installation category	I
Pollution degree	4

10.5 Process

temperature (at process connection)	−40 to +80 °C (−40 to +176 °F).
pressure (vessel)	maximum 3 bar, gauge (43.5 psi, gauge)

Note

Device-specific approvals

Always refer to nameplates on the device for device-specific approvals.

10.6 Approvals

Note

Conduit glands

The use of approved watertight conduit hubs/glands is required for Type 4X, Type 6, IP67, IP68 (outdoor applications).

General	FM/cCSAUS, CE, RCM		
Radio	Europe (RED), FCC, Industry Canada		
Hazardous	Intrinsic safety	Europe	ATEX II 1 G Ex ia IIC T4 Ga 06ATEX2354X
		International	IECEx SIR 13.0005X Ex ia IIC T4 Ga
		US/Canada	FM/CSA[1)] Class I, Div.1, Groups A, B, C, D Class II, Div.1, Groups E, F, G Class III T4
		Brazil	INMETRO DNV 12.0068X Ex ia IIC T4 Ga IP67/IP68 -40 ºC ≤ Ta ≤ +80 ºC
	Non-incendive	US	FM Class I, Div. 2, Groups A, B, C, D T5
Marine	ABS	American Bureau of Shipping	
	LR	Lloyd's Register of Shipping	

[1)] FM and CSA connection drawings are available online. See FM and CSA connection drawings (Page 25) for more information.

Note

Testing

EN 61000-4-3 (CE EMC) testing was conducted on the SITRANS Probe LR while mounted in a metallic vessel.

Dimension drawing

11

11.1 SITRANS Probe LR dimensions

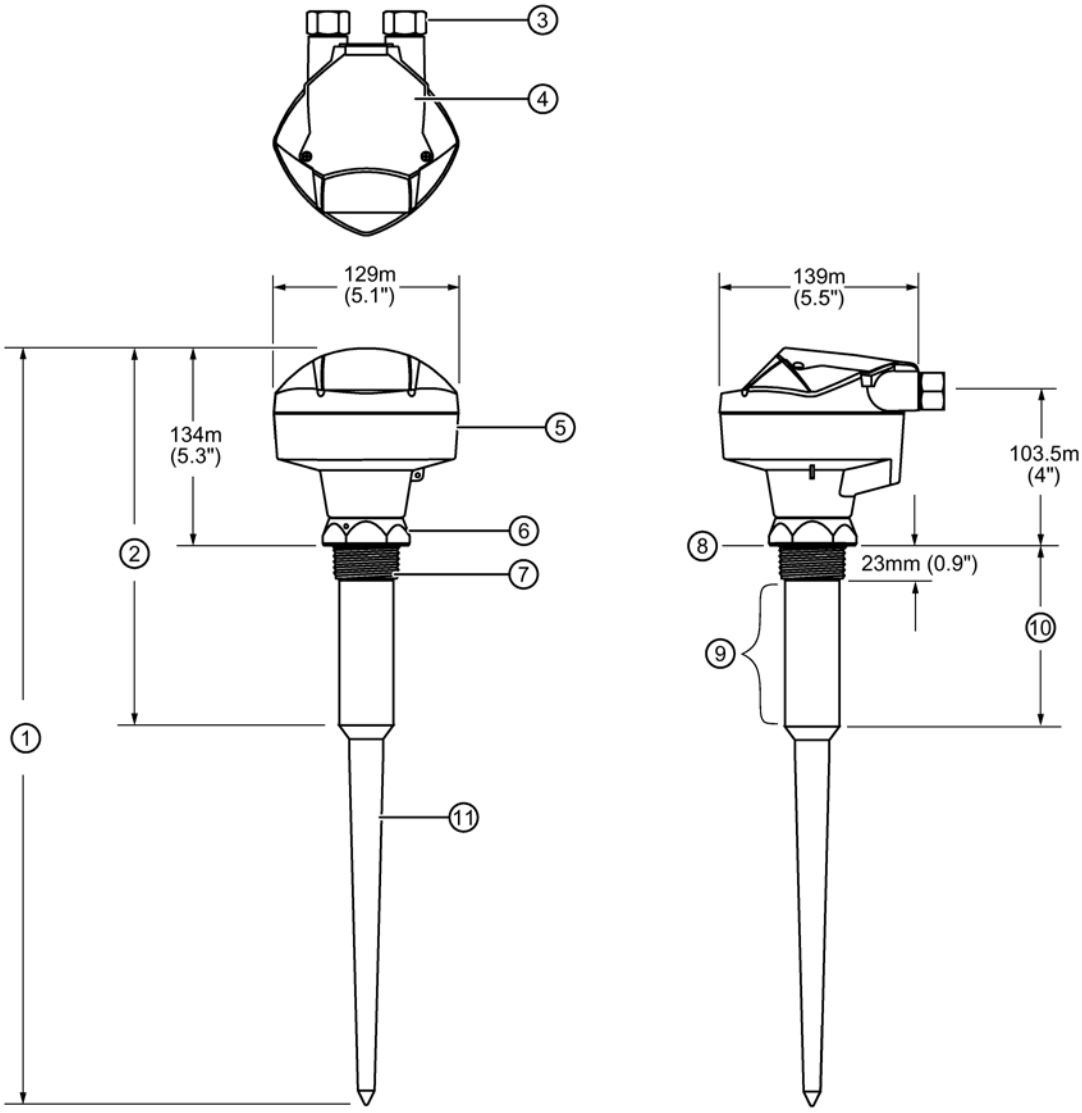

① Std. 552 mm (21.7") min. option 702 mm (27.6") max.
② Std. 273 mm (10.8") min. option 423 mm (16.7") max.
③ 1/2" NPT thread (or M20 plastic strain relief)
④ Hinged lid
⑤ Enclosure/electronics
⑥ Locking collar
⑦ Mounting thread
⑧ Reference point
⑨ (Internal) shield length standard: 100 mm (4") [optional: 250 mm (10")]
⑩ Std. 139 mm (5.47") [optional 289 mm (11.38")]
⑪ Polypropylene rod antenna

Technical reference

A

A.1 Principles of operation

SITRANS Probe LR is a sophisticated radar instrument that uses advanced microwave pulse technology[1)] to provide non-contacting continuous level measurement in liquids or slurries. Radar level measurement uses the time of flight principle to determine distance to a material surface. The device transmits a signal and waits for the return echo. The transmit time is directly proportional to the distance from the material.

Pulse radar uses polarized electromagnetic waves. Microwave pulses are emitted from the antenna at a fixed repetition rate, and reflect off the interface between two materials with different dielectric constants (the atmosphere and the material being monitored). The echo is detected by a receiver, and the transmit time is used to calculate level.

Electromagnetic wave propagation is virtually unaffected by temperature or pressure changes, or by changes in the vapor levels inside a vessel. Electromagnetic waves are not attenuated by dust.

SITRANS Probe LR consists of an enclosed electronic component coupled to an antenna and process connection. The electronic component generates a radar signal that is directed to the antenna.

The signal is emitted from the antenna, and the reflected echoes are digitally converted to an echo profile. The profile is analyzed to determine the distance from the material surface to the reference point on the instrument. This distance is used as a basis for the display of material level and mA output.

[1)] The microwave output level is significantly less than that emitted from cellular phones.

A.2 Transceiver

The SITRANS Probe LR transceiver operates under one of three sets of pre-set conditions which affect the speed of the measurement response (P003).

Measurement response P003		Max. fill/empty rate P700/P701		Echo verification P711	Failsafe timer P070 (time in minutes)
1	*	0.1 m/min	slow	2	100
2		1 m/min	medium	2	10
3		10 m/min	fast	2	1

The measurement response limits the maximum rate at which the display and analog output respond to changes in measurement. P003 should be set to a measurement response just faster than the maximum filling or emptying rate (whichever is greater).

When the echoes are received, the relevant echo algorithm (P820) is applied to determine the true material echo.

Typical receiver signal

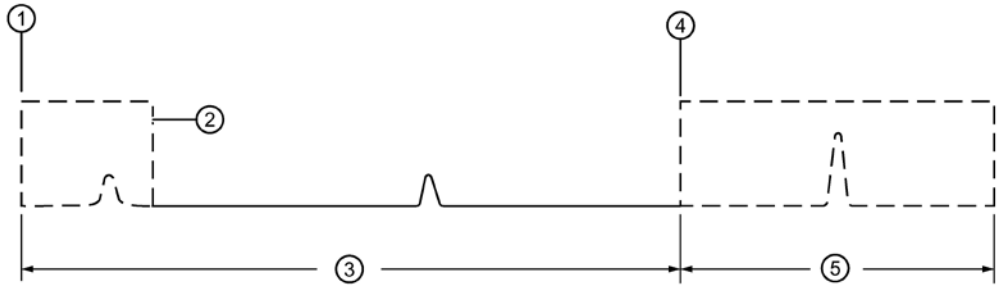

① End of transmit
② P800 Near blanking
③ Distance from process empty level to reference point P006
④ Empty level
⑤ Range extension (P801) as % P006

A.3 Near blanking

Near Blanking[1)] programs SITRANS Probe LR to ignore the zone in front of the antenna. The default blanking distance is 0.3 m (1 ft) plus any shield length, from the reference point[2)]. P800 allows you to increase the near blanking value from its factory setting. But Auto False-Echo Suppression (P837) is generally recommended in preference to extending the blanking distance from factory values.

[1)] Also referred to as "Blanking".

[2)] For the reference point, see SITRANS Probe LR dimensions (Page 84).

A.4 Loss of echo (LOE)

A loss of echo (LOE) occurs when the calculated measurement is judged to be unreliable because the confidence value (P805) is less than the threshold value (P804). If the LOE condition persists beyond the time limit set by the Failsafe timer (P070), the Reliable Echo indicator will be replaced by the Unreliable Echo indicator. The reading will alternate at two second intervals with the letters LOE.

Reliable echo indicator

Unreliable echo indicator

P070 determines the time to elapse after the last valid reading before a Failsafe state is activated. P071 determines the level to be reported when the Failsafe timer expires. Upon receiving a reliable echo, the loss of echo condition is aborted, the Reliable Echo indicator replaces the Unreliable Echo indicator, and the reading and mA output return to the current level.

A.5 Range extension

In applications where the base of the vessel is conical or parabolic, a reliable echo may be available below the vessel empty distance, due to an indirect reflection path. Increasing the range extension to 30% or 40% can provide stable empty vessel readings. Range extension is entered as a percentage of P006 (process empty level).

A.6 False-echo suppression

False echoes can appear during the receive cycle. They are often created by internal impediments like a ladder rung, and are usually indicated by an incorrect high level reading.

A.7 TVT (Time varying threshold) curves

A TVT curve defines a threshold below which any echoes will be ignored. The default TVT curve hovers above the echo profile, and effectively screens out small false echoes. But if an obstruction is causing a large echo before the material level echo, that echo will rise above the default TVT curve. You can use Auto False-Echo Suppression to filter it out.

The default TVT curve is used until P837 and P838 are used to create a new "learned TVT curve".

A.8 Auto false-echo suppression

The TVT adjustment parameters allow you to adjust the TVT (Time Varying Threshold) curve, so that SITRANS Probe LR will ignore false echoes in your application.

P838 allows you to set a distance, and P837 then instructs SITRANS Probe LR to "learn" where the obstructions/false echoes are within that distance. If possible, rotate the instrument before using Auto False-Echo Suppression, to lower the amplitude of false echoes.

When you set P837 to "Learn", the instrument learns the echo profile at that moment[1]. Then it uses the learned profile instead of the default TVT curve, for the distance set in P838. The learned profile (learned TVT curve) follows the echo profile, so that no large false echoes rise above the learned TVT curve. From the end of the Auto False-Echo Suppression Distance, the default TVT curve is used. The material level echo rises above this, and is selected as the true echo.

[1] Set P837 to "Learn" when the material level is substantially lower than process full level (ideally when the tank is empty or almost empty).

Display before Auto False-Echo Suppression (or when P837 = 0)

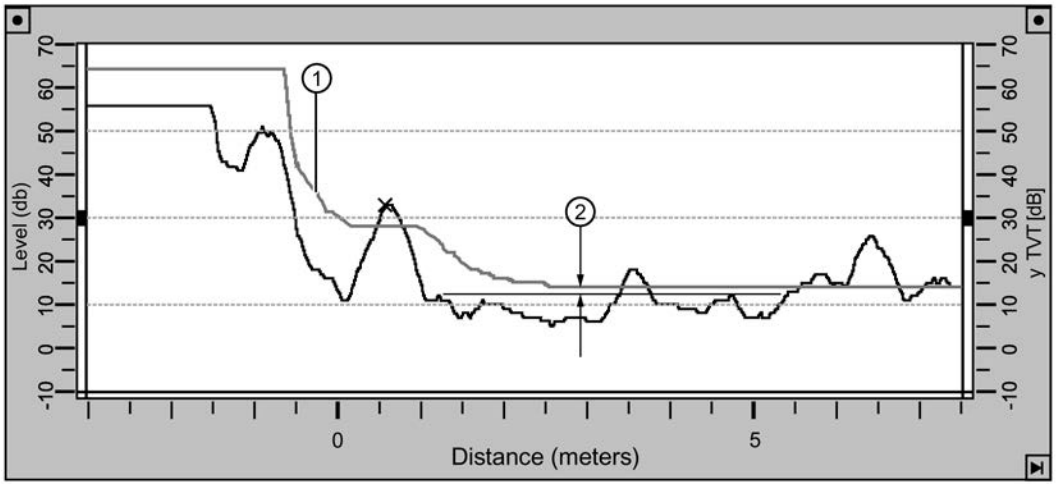

① Default TVT
② P839 Hover level

Example After Auto False-Echo Suppression

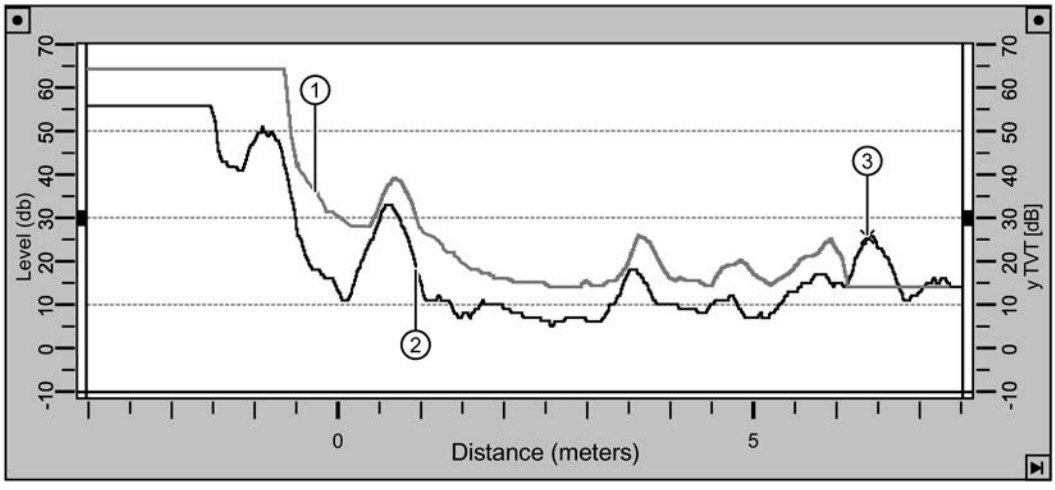

① TVT curve (learned)
② False echo
③ Material level

A.9 Output

The mA output is proportional to the level, in the range 4 to 20 mA. Generally, the output is set so that the output for 0% is 4 mA, and the output for 100% is 20 mA. 0 and 100% are percentages of the full-scale reading (m, cm, mm, ft, in).

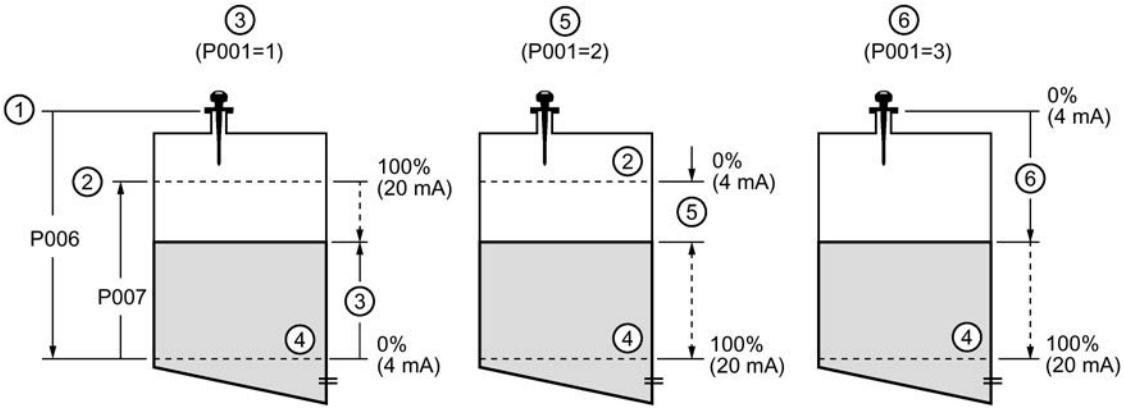

① Reference point
② Span
③ Level
④ Empty
⑤ Space
⑥ Distance

When SITRANS Probe LR is put into PROGRAM mode it stops responding to the process. It stores the most recent measurement, and holds the associated readings and mA signal output. The instrument reverts to the parameter last addressed during the previous program session.

When the instrument is returned to RUN mode, the transceiver resumes operation. The reading and mA output default to the last measurement taken. The reading and associated outputs migrate to the current process level at a rate controlled by the measurement response (P003).

If SITRANS Probe LR is left in PROGRAM mode for 10 minutes without input, it automatically reverts to RUN mode.

A.10 Failsafe

The Failsafe function can be activated either if there is not a valid measurement, or by one of the faults marked by an asterisk in the table General Fault Codes on page 84. In Failsafe mode, the device will output one of the four options determined by P071 (Failsafe Material Level).

Failsafe mode P071	
1= HI	Use Maximum mA limit (P213) as material level
2= LO	Use Minimum mA limit (P212) as material level
3= HOLd	Level remains at last reading
4=SEL	User selected value (defined in P073)

If an invalid measurement is generated by the application (for example, material level outside threshold settings), the Failsafe timer (P070) will control the speed of the Failsafe response. When the Failsafe timer expires, the device outputs the value selected in P071. If a valid measurement is received before the timer expires, the timer will be reset.

If failsafe mode is activated by a fault (see General fault codes (Page 74)), the instrument will go into failsafe mode without delay.

A.11 Chemical compatibility

The plastic materials used in the construction of SITRANS Probe LR (polypropylene, polybutylene terephthalate (PBT), and Polyether Imide (PEI)), are resistant to attack from most chemicals. For exposure to specific environments, check with chemical compatibility charts before installing and operating SITRANS Probe LR in your application.

HART communication

B

B.1 HART communication for SITRANS Probe LR

Highway Addressable Remote Transducer, HART, is an industrial protocol that is superimposed on the 4-20 mA signal. It is an open standard, and full details about HART can be obtained from HART Communication Foundation (https://fieldcommgroup.org/).

SITRANS Probe LR can be configured over the HART network using either a HART handheld Communicator, or a software package. There are a number of different software packages available. The recommended software package is the SIMATIC Process Device Manager (PDM) by Siemens.

B.2 HART electronic device description (EDD)

Note

SITRANS Probe LR cannot be configured using a generic EDD.

In order to configure a HART device, the configurator must have the HART Electronic Device Description for the device in question. HART EDD's are controlled by the HART Communication Foundation.

Please contact your local Siemens representative concerning the availability of the HART EDD for SITRANS Probe LR. Older versions of the library will have to be updated in order to use all the features in the SITRANS Probe LR.

B.3 SIMATIC process device manager (PDM)

This software package is designed to permit easy configuration, monitoring, and troubleshooting of HART devices. The HART EDD for SITRANS Probe LR was written with SIMATIC PDM in mind and has been extensively tested with this software.

The Device Description for SIMATIC PDM may be downloaded from the product page of our website, under downloads.

Product page (https://w3.siemens.com/mcms/sensor-systems/en/process-instrumentation/level-measurement-with-level-measuring-instruments/continuous/radar/Pages/sitrans-probe-lr.aspx)

All parameters accessible via the HART Communicator are also accessible via PDM. In addition, the Maintenance parameters listed below are accessible via PDM only.

B.4 Maintenance settings (accessible via PDM only)

Device lifetime

- Total device operating time
- Remaining device lifetime
- Maintenance required limit
- Maintenance demanded limit
- Maintenance alert activation
- Total expected device life
- Units
- Maintenance status
- Acknowledge status
- Acknowledge

Sensor lifetime

- Total sensor operating time
- Remaining sensor lifetime
- Maintenance required limit
- Maintenance demanded limit
- Maintenance alert activation
- Total expected sensor life
- Units
- Maintenance status
- Acknowledge status
- Acknowledge

Service interval

- Time elapsed since last service
- Maintenance required limit
- Maintenance demanded limit
- Maintenance alert activation
- Total service interval
- Units
- Maintenance status
- Acknowledge status
- Acknowledge

Calibration interval

- Time elapsed since last calibration
- Maintenance required limit
- Maintenance demanded limit
- Maintenance alert activation
- Total calibration interval
- Units
- Maintenance status
- Acknowledge status
- Acknowledge

B.5 HART version

SITRANS Probe LR conforms to HART rev. 5.

B.6 Burst mode

SITRANS Probe LR does not support burst mode.

Application examples

C

C.1 Application examples introduction

The application examples used in this manual illustrate typical installations using SITRANS Probe LR. Because there is often a range of ways to approach an application, other configurations may also apply.

In all examples, substitute your own application details. If the examples do not apply to your application, check the applicable parameter reference for the available options.

C.2 Example 1: Liquid resin in storage vessel, level measurement

Note

- The minimum distance from the flange face to the target is limited by Near Blanking P800.
- Only set P837 if the product is at least 2 m (78”) away from the flange face. If it is closer, leave P837 at 1 until the level drops and the distance increases beyond 2 m (78”).

The application is to obtain a level measurement and corresponding 4 to 20 mA output proportional to resin levels in a storage vessel. (Units selected are meters.) Process empty level (Empty) is the bottom of the tank, which is 5 m from the antenna flange face. Process full level (Span) is 4.5 m from the vessel bottom. The maximum rate of filling or emptying is about 0.2 m/min. In the event of a loss of echo, SITRANS Probe LR is to go into Failsafe Hi after 2 minutes.

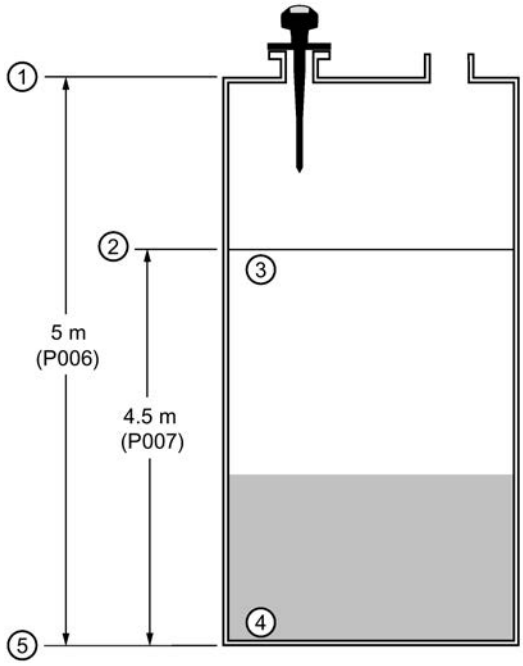

① Reference point
② Span
③ 100% Level
④ 0% Level
⑤ Empty

Parameter	Description	Value	Function
P001	Mode of measurement	1	Level
P003	Measurement response	2	1 m/minute
P005	Units	1	meters
P006	Empty distance	5	5 m
P007	Span	4.5	4.5 m
P070	Failsafe timer	2	2 minutes
P071	Failsafe mode	1	Hi
P838	Auto False-Echo Suppression Distance	Distance[1] minus 0.5 m	Sets length of learned TVT curve[2] to use
P837	Auto False-Echo Suppression	2, then 1	Enables the use of learned TVT curve[2]

[1] Distance to product from reference point.

[2] For more details on setting P837 and P838, see P837 Auto false echo suppression (Page 66). For an explanation, see Auto false-echo suppression (Page 88).

Return to **RUN**: press **PROGRAM** to start normal operation.

C.3 Example 2: Horizontal vessel with volume measurement

Note

- The minimum distance from the flange face to the target is limited by Near Blanking P800.
- Only set P837 if the product is at least 2 m (78”) away from the flange face. If it is closer, leave P837 at 1 until the level drops and the distance increases beyond 2 m (78”).

The application is to obtain a level measurement and corresponding 4 to 20 mA output proportional to vessel volume in a chemical vessel. Process empty level (Empty) is the bottom of the tank, which is 3.5 m from the antenna flange face. Process full level (Span) is 3.0 m from the vessel bottom. The maximum rate of filling or emptying is about 0.2 m/min. Selecting tank shape 7 at P050, and entering values for A and L, will give a volume reading instead of level. In the event of a loss of echo, SITRANS Probe LR is to go into Failsafe Hi after 2 minutes.

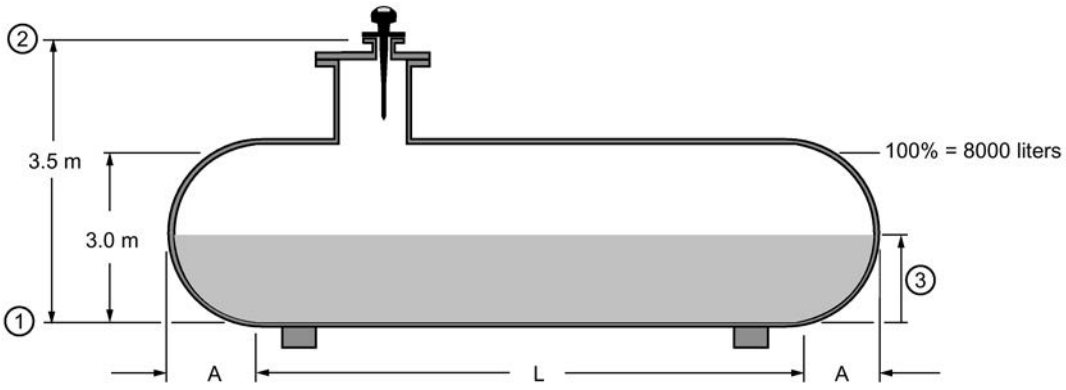

① Empty
② Reference point
③ Volume reading

Parameter	Description	Value	Function
P001	Mode of measurement	1	Volume replaces Level when a tank shape is selected at P050
P003	Measurement response	2	1 m/minute
P005	Units	1	meters
P006	Empty distance	3.5	3.5 m
P007	Span	3	3 m
P050	Vessel shape	7	parabolic ends
P051	Maximum volume	8000	8000 liters
P052	Vessel dimension A	0.8	0.8 meters
P053	Vessel dimension L	6	6 meters
P070	Failsafe timer	2	2 minutes
P071	Failsafe	1	Hi

Parameter	Description	Value	Function
P838	Auto False-Echo Suppression Distance	Distance[1] minus 0.5 m	Sets length of learned TVT curve[2] to use
P837	Auto False-Echo Suppression	2, then 1	Enables the use of learned TVT curve[2]

[1] Distance to product from reference point.

[2] For more details on setting P837 and P838, see P837 Auto false echo suppression (Page 66). For an explanation, see Auto false-echo suppression (Page 88).

Hazardous area installations

D

D.1 Wiring details

Intrinsically safe model

FM (reference drawing A5E01003040)

CSA (reference drawing A5E01003039)

Under the entity evaluation concept, SITRANS Probe LR has the following characteristics:

(input voltage) U_i	= 30 V DC (max.)
(input current) I_i	= 120 mA DC (max.)
(input power) Pi	= 0.8 W
(internal capacitance) C_i	= 15 nF
(internal inductance) L_i	= 0.1 mH

Definition:

The Entity Concept allows interconnection of intrinsically safe apparatus to associated apparatus not specifically examined in such combination. The criteria for interconnection is that the voltage and current which intrinsically safe apparatus can receive and remain intrinsically safe, considering faults, must be equal to or greater than the output voltage (U_o) and output current (I_o) levels which can be delivered by the associated apparatus, considering faults and applicable factors. In addition, the maximum unprotected capacitance (C_i) and Inductance (L_i) of the intrinsically safe apparatus, including interconnecting wiring, must be equal to or less than the capacitance and inductance which can be safely connected to associated apparatus.

D.2 FM/CSA

- Approved dust-tight and water-tight conduit seals are required for outdoor Type 4X, Type 6, IP67, IP68 locations.
- The maximum voltage of the non-intrinsically safe apparatus must not exceed 250 V rms.
- Recommended intrinsically safe barriers are listed here: IS safety barrier selection (Page 100).

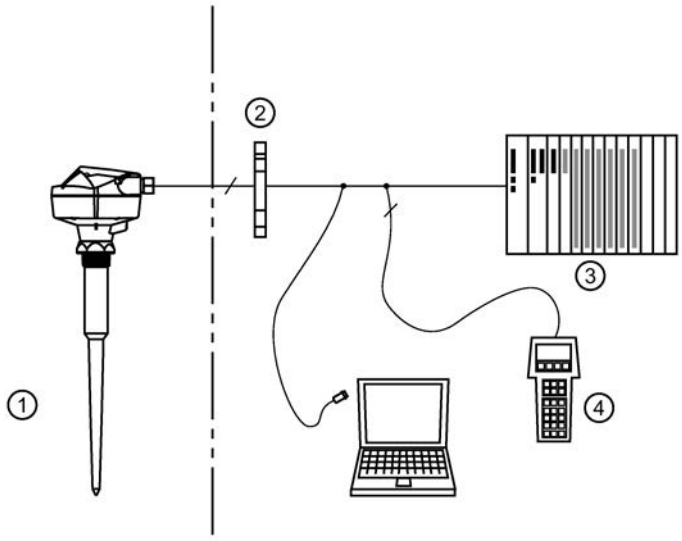

① Zone 0,1 or 2
Load 4-20 mA
② Certified barrier
③ PLC (active)
④ HART handheld communicator

D.3 EU equivalency

Any zener diode safety barrier, certified by an EU approved certification body to [EEx ia] IIC, its output voltage (U_o) not exceeding 30 V and its output current (I_o) limited by load resistance (R_o); such that $I_o = U_o / R_o$, does not exceed 120 mA.

Note

- The electrical circuit in the hazardous area must be capable of withstanding an AC test voltage of 500 V rms to earth or frame of the apparatus for one minute.
- The installation must comply with national requirements.
- The safe area is unspecified except that it must not be supplied from nor contain, under normal or abnormal conditions, a source of potential with respect to earth in excess of 250 V rms or 250 V DC.

D.4 Loop voltage versus loop resistance

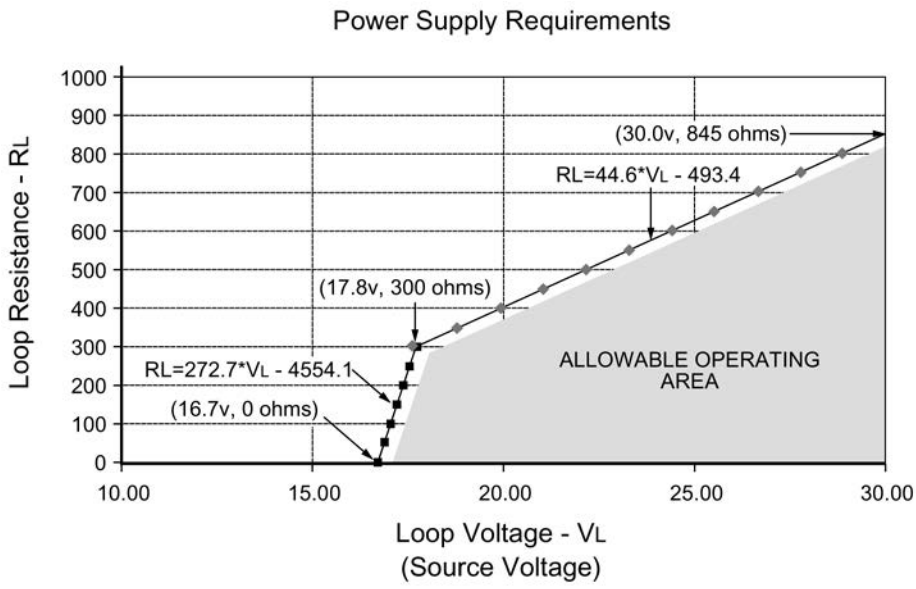

D.5 IS safety barrier selection

Selecting a suitable barrier or power supply requires knowledge about Intrinsic Safety and the application. It is the responsibility of the installer to ensure that the intrinsically safe installation complies with both the apparatus approval requirements and the relevant national code of practice.

How to select a passive barrier for SITRANS Probe LR

1. Make sure that the barrier safety description is suitable for the SITRANS Probe LR Intrinsically Safe (IS) input parameters.
2. Determine the maximum end-to-end resistance of the barrier (Re-e) from the data sheet.
3. Determine other loop resistance (Rloop): for example, sense resistance, displays, and/or PLC inputs.
4. Calculate Rworking = Re-e + Rloop.
5. Determine any non-linear voltage drops due to the barrier (Vbarrier) from the barrier data sheet (for example, voltage drops due to diodes).
6. Calculate Vworking = Vsupply – Vbarrier.
7. Using Vworking and Rworking, confirm that operation is within the shaded area of the graph Loop voltage versus loop resistance (Page 100).

Note

- The following list is not complete: there are many safety barriers on the market, which will work with the SITRANS Probe LR.
- The barriers listed below have all been tested and are functionally compatible with the SITRANS Probe LR.
- The barriers listed below are all HART compatible.

PLC Input Modules

Manufacturer	Part number
Siemens	SM331 PCS7 HART Input Module

Passive shunt diode barriers

Note

A well-regulated supply voltage is required.

Manufacturer	Part number
MTL	787SP+ (Dual channel)
MTL	7787P+ (Dual channel)
Stahl	9001/01-280-100-10 (Single channel)
Stahl	9002/01-280-110-10 (Dual channel)

Active barriers (repeating barriers)

Manufacturer	Part number
MTL	706
MTL	7206
Stahl	9001/51-280-110-14

D.6 Instructions specific to hazardous area installations (reference European ATEX Directive 2014/34/EU Annex II, 1/0/6)

The following instructions apply to equipment covered by certificate number SIRA 06ATEX2354X:

1. For use and assembly, refer to the main instructions.
2. The equipment is certified for use as Category 1G equipment.
3. The equipment may be used with flammable gases and vapors with apparatus group IIC and temperature class T4.
4. The equipment is certified for use in an ambient temperature range of –40 °C to 80 °C.
5. The equipment has not been assessed as a safety related device (as referred to by Directive 2014/34/EU Annex II, clause 1.5).
6. Installation and inspection of this equipment shall be carried out by suitably trained personnel in accordance with the applicable code of practice (EN 60079-14 and EN 60079-17 in Europe).
7. Repair of this equipment shall be carried out by suitably trained personnel in accordance with the applicable code of practice (e.g. EN 60079-19 within Europe).
8. Components to be incorporated into or used as replacements in the equipment shall be fitted by suitably trained personnel in accordance with the manufacturer’s documentation.
9. It is the responsibility of the user to ensure that manual override is possible in order to shut down the equipment and protective systems incorporated within automatic processes which deviate from the intended operating conditions, provided that this does not compromise safety.
10. The "X" suffix to the certificate number relates to the following special conditions for safe use:

    Parts of the enclosure may be non-conducting and may generate an ignition capable level of electrostatic charge under certain extreme conditions. The user should ensure that the equipment is not installed in a location where it may be subjected to external conditions (such as high-pressure steam) which might cause a build-up of electrostatic charge on non-conducting surfaces.
11. If the equipment is likely to come into contact with aggressive substances, then it is the responsibility of the user to take suitable precautions that prevent it from being adversely affected, thus ensuring that the type of protection is not compromised.

    Aggressive substances: e.g. acidic liquids or gases that may attack metals, or solvents that may affect polymeric materials

    Suitable precautions: e.g. regular checks as part of routine inspections or establishing from the material's data sheet that it is resistant to specific chemicals.
12. Equipment marking

    The equipment marking contains at least the information on the product nameplates.

Certificates and support

E

E.1 Technical support

Technical support

If this documentation does not provide complete answers to any technical questions you may have, contact Technical Support at:

- Instructions and manuals (http://www.siemens.com/processinstrumentation/documentation)
- More information about our Technical Support is available at Technical Support (http://www.siemens.com/automation/csi/service)

Internet Service & Support

In addition to our documentation, Siemens provides a comprehensive support solution at:

- Partner (http://www.automation.siemens.com/partner)

Personal contact

If you have additional questions about the device, please contact your Siemens personal contact at:

- Support request (http://www.siemens.com/automation/support-request)

To find the personal contact for your product, go to "All Products and Branches" and select "Products & Services > Industrial Automation > Process Instrumentation".

Documentation

You can find documentation on various products and systems at:

- Services & Support (http://www.siemens.com/automation/service&support)

E.2 Certificates

You can find certificates on the Internet at Industry Online Support (https://support.industry.siemens.com/cs/products?dtp=Certificate&mfn=ps&pnid=17456&lc=en-WW) or on an included DVD.

Glossary

accuracy

degree of conformity of a measure to a standard or a true value.

algorithm

a prescribed set of well-defined rules or processes for the solution of a problem in a finite number of steps.

ambient temperature

the temperature of the surrounding air that comes in contact with the enclosure of the device.

antenna

an aerial which sends out and receives a signal in a specific direction. There are four basic types of antenna in radar level measurement, horn, parabolic, rod, and waveguide.

Auto false-echo suppression

a technique used to adjust the level of a TVT to avoid the reading of false echoes. (See TVT.)

Auto false-echo suppression distance

defines the endpoint of the learned TVT distance. This is used in conjunction with auto false echo suppression.

beam angle

the angle diametrically subtended by the on-half power limits (-3 dB) of the microwave beam.

blanking

a blind zone extending away from the reference point plus any additional shield length. The device is programmed to ignore this zone.

capacitance

the property of a system of conductors and dielectrics that permits the storage of electricity when potential differences exist between the conductors. Its value is expressed as the ratio of a quantity of electricity to a potential difference, and the unit is a Farad.

confidence

describes the quality of an echo. Higher values represent higher quality. Confidence threshold defines the minimum value.

damping

term applied to the performance of a device to denote the manner in which the measurement settles to its steady indication after a change in the value of the level.

dB (decibel)

a unit used to measure the amplitude of signals.

dielectric

a nonconductor of direct electric current. Many conductive liquids/electrolytes exhibit dielectric properties; the relative dielectric constant of water is 80.

dielectric constant (dK)

the ability of a dielectric to store electrical potential energy under the influence of an electric field. Also known as Relative Permittivity. An increase in the
dielectric constant is directly proportional to an increase in signal amplitude. The value is usually given relative to a vacuum /dry air: the dielectric constant of air is 1.

echo

a signal that has been reflected with sufficient magnitude and delay to be perceived in some manner as a signal distinct from that directly transmitted. Echoes are frequently measured in decibels relative to the directly transmitted signal.

echo confidence

describes the quality of an echo. Higher values represent higher quality. Echo Threshold defines the minimum value required for an echo to be accepted as valid and evaluated.

Echo Lock Window

a window centered on an echo in order to locate and display the echo’s position and true reading. Echoes outside the window are not immediately processed.

Echo Marker

a marker that points to the processed echo.

Echo Processing

the process by which the radar unit determines echoes.

echo profile

a graphical display of a processed echo.

Echo Strength

describes the strength of the selected echo in dB referred to 1 µV rms.

electrical noise

unwanted electrical signals that produce undesirable effects in the circuit or the control systems in which they occur.

false echo

any echo which is not the echo from the desired target. Generally, false echoes are created by vessel obstructions.

frequency

the number of periods occurring per unit time. Frequency may be stated in cycles per second.

HART

Highway **A**ddressable **R**emote **T**ransducer. An open communication protocol used to address field instruments.

Hertz (Hz):

unit of frequency, one cycle per second. 1 Gigahertz (GHz) is equal to 10^9 Hz.

inductance

the property of an electric circuit by virtue of which a varying current induces an electromotive force in that circuit or in a neighboring circuit. The unit is a Henry.

microwaves

the term for the electromagnetic frequencies occupying the portion of the radio frequency spectrum from 1 GHz to 300 GHz.

multiple echoes

secondary echoes that appear as double, triple, or quadruple echoes in the distance from the target echo.

Near Blanking

see Blanking.

nozzle

a length of pipe mounted onto a vessel that supports the flange.

parameters

in programming, variables that are given constant values for specific purposes or processes.

propagation factor (pf)

where the maximum velocity is 1.0, pf is a value that represents a reduction in propagation velocity as a result of the wave travelling through a pipe or medium.

pulse

a wave that departs from an initial level for a limited duration of time, and returns to the initial level

pulse radar

a radar type that directly measures distance using short microwave pulses. Distance is determined by the return transit time.

radar

radar is an acronym for **RA**dio **D**etection **A**nd **R**anging. A device that radiates electromagnetic waves and utilizes the reflection of such waves from distant objects to determine their existence or position.

range

distance between a transmitter and a target.

range extension

the distance below the zero percent or empty point in a vessel.

relative permittivity

see dielectric constant

repeatability

the closeness of agreement among repeated measurements of the same variable under the same conditions.

stilling-well

a pipe that is mounted inside a vessel, parallel to the vessel wall and open to the vessel at the bottom.

TVT (Time Varying Threshold)

a time-varying curve that determines the threshold level above which echoes are determined to be valid.

Index

A

Agitators, 61
Algorithm
    select for true echo, 65
Analog output
    in run mode, 90
    response rate, 86
Application examples
    horizontal tank with volume, 96
    liquid resin in storage vessel, 94
Approvals
    specifications, 83
Auto false-echo suppression, 88
    application, 38
Auxiliary reading
    parameter function key, 31
    PROGRAM mode, 28

B

Beam angle, 21
Beam angle spread, 20
Blanking, 87
    extending, 64
Breakpoints
    level, 49
    volume, 50

C

Cables
    requirements, 24
Certificates, 11, 103
Compact Operating Instructions, 103
Customer Support, (Refer to Technical support)

D

Damping, 60
Disassembly, 18
Disposal, 73
Documentation, 103

E

Echo
    confidence, 65
    strength, 65
    verification, 44
Emission cone
    illustration, 21

F

Failsafe
    function, 91
    timer, 91
False echoes, 88
    set TVT curve to ignore, 88

H

Handheld programmer
    instructions, 31
HART
    address, 63
    communication details, 92
    electronic device description, 92
Hazardous area
    Laws and directives, 11
    Qualified personnel, 14
Hotline, (Refer to Support request)

I

Installation
    beam angle, 21
    hazardous areas, 98
    vessel shape notes, 20
Instructions and manuals, 103

L

Laws and directives
    Disassembly, 11
    Personell, 11
Lithium batteries
    Safety, 29

Lock value, 51
Loss of echo, 87

M

Manuals, 103
Master reset, 33, 71
Material mixers, 61
mounting
    nozzle location, 20

N

Near blanking, 87
    extending, 64

O

Operating Instructions, 103

P

PDM, 92
Percent
    toggle units or percent, 30
Power source
    requirements, 23
Power supply requirements
    loop voltage vs loop resistance, 100
Primary index, 40
    accessing, 40
    changing a value, 40
Propagation factor, 58

Q

Qualified personnel, 14
Quick start programming, 34

R

Range extension, 64
    to obtain reliable echo, 88
Receiver signal, 87
Return procedure, 72

S

Safety barrier selection, 100
Scope of delivery, 8
Secondary index, 40
    accessing, 41
    changing a value, 41
Security
    unlocked value, 41
Service, 103
Service & Support, 103
    Internet, 103
SIMATIC PDM, 92
Space measurement, 42
Support, 103
Support request, 103

T

Technical data, 80
Technical support, 103
    Partner, 103
    Personal contact, 103
Temperature specification
    ambient/operating, 19
Test certificates, 11
Threshold value, 87
Transceiver, 86
Troubleshooting
    operation, 78
TVT curves, 88

U

Unlocked value, 51

V

Vessel shape
    installation notes, 20

W

Warranty, 10
Wire gauge, 24
Wiring
    cables, 24
    hazardous areas, 98

Z

Zener diode safety barriers, 99