Type 2000
I/P & E/P Transducers

Description

The Marsh Bellofram Type 2000 is a robust electronic instrument that regulates an incoming supply pressure down to a precise output pressure which is directly proportional to an electrical control signal. The secret to the Type 2000's precise, reliable performance under a variety of demanding environmental conditions is a patented piezo-ceramic actuator with many industry-wide firsts.

The Type 2000 has been designed to meet the electro-pneumatic needs of the world:

- Field-selectable inputs and direct/reverse/split ranging
- Multiple input/output/mounting configurations
- Precise, reliable performance under extreme conditions of temperature, vibration, orientation, supply pressure changes, supply voltage changes, RFI/EMI, humid / oil-laden media, and corrosive surroundings

Applications

The Type 2000's precisely regulated pneumatic output can be used to operate:

- Valve Actuators
- Louver and Damper Actuators
- Valve Positioners
- Relays
- Clutches and Brakes
- Controllers
- Air Cylinders

Industry Applications Include

- Chemical and Petrochemical Industries
- Petroleum Production
- Pipeline Transmission
- Electric Utilities
- Water and Wastewater Systems
- Pulp and Paper
- Textiles
- Semiconductor Industry
- Food and Beverage
- Environmental Control Systems
- Construction Equipment
- Agricultural Equipment
- Machine Tool
- Material Handling
- Automotive Testing and Assembly
- Medical Equipment

Principle of Operation

The Type 2000 I/P and E/P transducers utilize closed-loop pressure feedback-control for precision pressure output and minimized effects of temperature, supply pressure changes, supply voltage changes, and mounting angle.

Supply pressure is reduced by the supply valve to provide an output pressure which is internally routed to a precision temperature compensated piezo-resistive pressure sensor. Supply pressure is also routed to an externally removable orifice which provides a reduced pilot pressure to a chamber containing a servo diaphragm and nozzle. Pilot pressure is controlled by modulating the gap between the face of a nozzle and an adjacent piezo-ceramic actuator, which is part of a unique patented mechanism.

The piezo-ceramic actuator serves as a control link between electrical input and pressure output as follows:

- The input current (I/P) or voltage (E/P) signal is conditioned to provide a normalized control signal directly proportional to the desired pressure output.
- Simultaneously the output of the pressure sensor is amplified and conditioned to produce a feedback signal.
- The sum of the control signal and the feedback signal produce a command signal which is delivered as a DC voltage to the piezo-ceramic actuator.
- As voltage increases, the force applied by the actuator increases, so as to restrict nozzle bleed and thus increase pilot pressure.
- Increased pilot pressure applied to the servo diaphragm directly causes opening of the supply valve and an increase in the output pressure until the output feedback signal and control signal combine to produce the correct command signal.

Fine-Tuning Your Application

For optimal performance in your application, the calibration of the Type 2000 can be fine-tuned in the field. An easily-removable cover provides access to the isolated electronics. All potentiometers, connections, jumpers, and switches are clearly marked on the circuit board or on the handy chart located on the inside of the cover. The three elements of calibration (Gain, Zero, and Span) are described below. Consult the Type 2000 User's Manual for detailed calibration procedures, cautions, and instrumentation requirements.

Gain (Damping) Adjustment

The output response of the Type 2000 can be optimized for varying downstream volumes by adjusting the system gain of the control circuit. Adjust the Gain Pot counterclockwise for increased gain; clockwise for increased oscillation damping. For maximum allowable gain in your application, the pot should be turned clockwise until oscillation just disappears.

Note

The combined adjustments of Gain, Zero and Span are all interactive. It may take several adjustment attempts to accomplish final desired setting.

Zero and Span Adjustments

The Type 2000 contains multi-turn Coarse-Zero, Fine-Zero, and Span adjustment potentiometers which are clockwise positive. Adjustment of either Zero Pot changes the unit's minimum output while the Span Pot changes the maximum output.

Wide Rangeability

The Type 2000 can be field calibrated to pressure ranges other than the standard ones by combinations of recalibration, pressure range switching, and split high/low ranging. A unit should not be switched to a range outside its pressure sensor family (eg., a 0-15 PSIG can be switched to a 3-15 PSIG, but not to 0-30 PSIG). (Caution: Do not exceed the range of the onboard pressure sensor.) For example, the easiest way to recalibrate a 0-30 PSIG unit to 3-15 psig would be to change the switch setting to 3-27 PSIG, then switch to split range low.

Field-Selectable Features

Onboard switches allow the user to easily reconfigure the Type 2000 for any of several electrical inputs, direct/reverse acting, or output split-ranging high/low. Fine tuning of the unit's calibration may be necessary after a reconfiguration.

Direct/Reverse Acting

Direct Acting transducers regulate to their mini-

mum output when supplied with minimum input; maximum out with maximum in. Reverse Acting transducers regulate to their maximum output at minimum input.

Split Ranging (High or Low)

The Type 2000 can be configured to regulate either half (top or bottom) of its normal output range, when supplied with its normal full-ranging electrical input. For example, a 0-10V 0-30 PSI unit set to split range low will regulate 0-15 PSI @ 0-10V. It will regulate 15-30 PSI @ 0-10V if set to split range high.

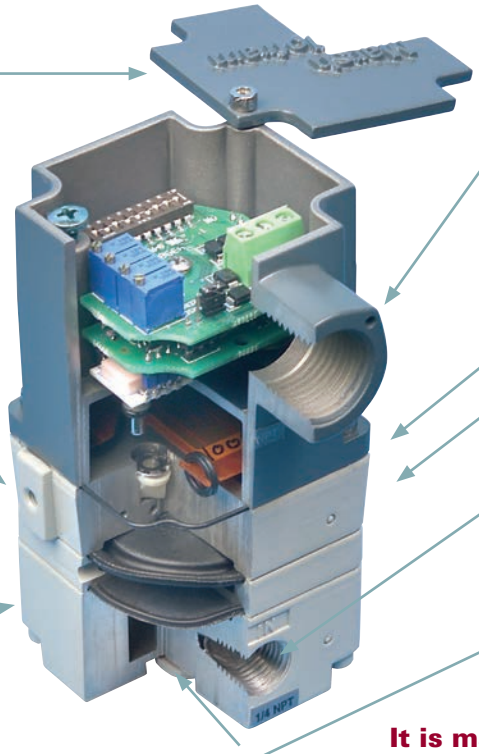

Easy Access Top Cover
1) Isolated electronics
2) Calibration adjustments
3) Configuration switches
4) Switch information on inside of cover

Mounting Options
1) In-Line
2) Direct: Holes on left rear and bottom faces
3) Bracket Mounting options: Panel, Pipe, Valve, DIN-Rail

Integral Booster
Flows up to 21 scfm for quick system response

Gauge Port
1/8 NPT on all models (Not shown; rear face)

Electrical Port Options
1) 1/2 NPT Conduit
2) 20mm Conduit
3) Hirschmann® (DIN 43 650-A)
4) Terminal Block

Easy Access Orifice

Output Port
Same as Input Port (Not shown; rear face)

Input Port Options
1) 1/4 NPT
2) 1/4 BSPP
3) 1/4 BSPT

Manifold-Mounting Option
Supply and Output ports on the bottom face rather than "through the body"

It is mandatory for the user to install a suitably rated NRTL Listed or Certified conduit seal

Agency Approvals - Applies only to units ordered with approvals

T2000 Factory Mutual (FM)

E model with F approval
Explosion Proof/Intrinsically Safe
Not for use with natural gas or other non-inert gases.
Explosion Proof: Class I, Div 1, Groups A, B, C, & D; T6, Ta = 60°C
Dust-Ignition Proof: Classes II & III, Div 1, Groups E, F, & G; T6, Ta = 60 °C;
Type 4X, IP66
Intrinsically Safe: Classes I, II, & III, Div 1, Groups A, B, C, D, E, F, & G; T4, Ta = 60 °C;
990-438-000, Entity
Type 4X, IP66
Non-Incendive: Class I, Div 2, Groups A, B, C, & D; T4, Ta = 60 °C
Suitable: Class II, Div 2, Groups F & G; T4, Ta = 60 °C
Suitable: Class III, Div 2; T4, Ta = 60 °C
Type 4X, IP66
Entitiy Parameters:
I/P: Vmax=30 V, Imax=200 mA, Pmax=1 W, Ci=0, Li=0
E/P: Vmax=30 V, Imax=100 mA, Pmax=0.75 W, Ci=0, Li=0

E model with G approval
Explosion Proof, United States and Canada
For use with natural gas or other non-inert gases as a process medium up to a maximum input pressure of 140 PSI when installed with suitable NRTL listed, certified, or approved conduit seal installed at the enclosure.
Explosion Proof: Class I, Div 1, Groups A, B, C, & D, T6 Ta-60 °C
Dust-Ignition Proof: Classes II & III, Div 1, Groups E, F, & G, T6, Ta=60 °C
Type 4X, IP66

S Model
Intrinsically Safe: Class I, III, & III, Div 1, Groups A, B, C, D, E, F, & G; T4, Ta=60 °C
990-438-000, Entity
Non-Incendive: Class 1, Div 2, Groups A, B, C, & D, T4, Ta=60 °C
Suitable: Class II, Div 2, Groups F & G, T4, Ta=60 °C
Suitable: Class III, Div 2, T4 Ta=60 °C Type 4X
Entitiy Parameters:
I/P: Vmax=30 V, Imax=200 mA, Pmax=1 W, Ci=0, Li=0
E/P: Vmax=30 V, Imax=100 mA, Pmax=0.75 W, Ci=0, Li=0

S Model with Terminal Block
Intrinsically Safe: Class I, Div 1, Groups A, B, C, & D; T4, Ta=60 °C
Non-Incendive: Class I, Div 2, A, B, C, & D; T4, Ta=60 °C
Entitiy Parameters:
I/P: Vmax=30 V, Imax=200 mA, Pmax=1 W, Ci=0, Li=0
E/P: Vmax=30 V, Imax=100 mA, Pmax=0.75 W, Ci=0, Li=0

CSA

Class No: 2258 04 Process Control Equipment
Intrinsically Safe, Entity - For Hazardous Locations
T-2000 2K - S model Electro-Pneumatic I/P and E/P
Transducers. Maximum Ambient Temperature: +60°C.
Enclosure Type 4X. Temperature Class T4. Intrinsically Safe when installed as per drawing 990-438-000.
Class I, Division 1 & 2 Groups A to D; Class II Division 1 Groups E, F, and G, Division 2 Groups F and G; Class III Hazardous Locations
Two sets of Entity Parameters may be used in the installation of this product.
Entity Parameters
I/P: Vmax = 30V Imax = 200mA Pmax = 1.0W Ci = 0mF Li = 0mH
E/P: Vmax = 30V Imax = 100mA Pmax = 0.75W Ci = 0mF Li = 0mH

T-2000 2K-E model I/P & E/P Transducer, Rated: 28Vdc, 8mA;
T-Code T6; Enclosure Type 4X, IP66; Max Ambient Temperature: +60°C.
Intrinsically Safe when installed as per drawing 990-438-000.
Class I, Division 1 & 2 Groups A to D; Class II Division 1 Groups E, F, and G, Division 2 Groups F and G; Class III Hazardous Locations
Two sets of Entity Parameters may be used in the installation of this product.
Entity Parameters
I/P: Vmax = 30V Imax = 200mA Pmax = 1.0W Ci = 0mF Li = 0mH
E/P: Vmax = 30V Imax = 100mA Pmax = 0.75W Ci = 0mF Li = 0mH

The following equipment is in compliance with STD C22.2 No 213:
Class I, Division 1, Groups A, B, C & D; Class II, Groups E, F & G; Class III.
T-2000 2K- E model I/P & E/P Transducer, Rated: 28Vdc, 8mA; T-Code T6; Enclosure Type 4X, IP66; Max Ambient Temperature: +60°C.

ATEX
II 1 G Ex ia IIC T4 Tamb = -20°C. to +60°C.
Entity Parameters:
Ui=30V, Ii=20mA, Pi=1W
Ci=0, Li=0
The enclosure is manufactured from aluminum. In rare cases, ignition sources due to impact and friction sparks could occur. This shall be considered during installation, particularly if the equipment is installed in a zone 0 location.

Type 2000 Specifications

Accuracy	0.1% of full-scale output typical (0.25% guaranteed); includes effects of hysteresis, dead band, and repeatability
Electrical	
Inputs	Switch-Selectable 4-20mA. 0-5, 1-5, 1-9, 1-10, or 0-10VDC
Connections	1/2 NPT or 20mm Conduit DIN Hirschmann (S model only) External Terminal Block (S model only)
Power Supply	5-28VDC (with voltage inputs only)
Direct/Reverse Acting	Switch-Selectable
Pneumatic	
Outputs	0-5, 0-15, 3-15, 1-17, 0-30, 6-30, 3-27, 0-60, 0-100, or 120 PSIG 0-0.1, 0-0.3, 0-1.0, 0.2-1.0, 0.07-1.2, 0-2.1, 0.4-2.1, 0.2-1.9, 0-4.1, 0-6.9, 0-8.3 BAR
Ports (Input/Output)	1/4" (NPT, BSPT, or BSPP threads) Bottom-ported for Manifold Mounting
Exhaust	(Explosion proof only) 1/8 - 27 NPT
Ports (Gauge)	1/8 NPT
Supply	For 0–5 PSIG (0.3 BAR) Through 0–60 PSIG From 5 PSIG (0.3 BAR) above maximum output to 100 PSIG maximum For 0-100 PSIG and 0–120 PSIG Ranges From 5 PSIG (0.3 BAR) above maximum output to 140 PSIG maximum
Split-Ranging	Switch-Selectable, Full-Range or Split-Range High or Split-Range Low
Consumption	4 SCFH maximum (1.9 LPM)

Flow Capacity

Range		Sensor		Flow	
PSIG	BAR	PSIG	BAR	SCFM	LPM
0-5	0-0.3	5	0.3	11	312
0-15	0-1.0	15	1.0	15	423
3-15	0.2-1.0	15	1.0	15	423
1-17	0.07-1.2	15	1.0	15	423
0-30	0-2.1	30	2.1	15	423
3-27	0.2-1.9	30	2.1	15	423
6-30	0.4-2.1	30	2.1	15	423
0-60	0-4.1	50	3.5	17	480
(Typical Flow @ 100 PSIG (6.9 BAR) in and maximum out)					
0-100	0-6.9	100	6.9	21	595
0-120	0-8.3	100	6.9	21	595
(Typical Flow @ 140 PSIG (9.7 BAR) in and maximum out)					

Exhaust Capacity	3 SCFM (85 LPM) @ 5 PSIG (0.3 BAR) above setpoint (0-15 PSIG range unit set at mid range)
Stability	
Supply Voltage Effect	None
Supply Pressure Effect	None
Vibration Effect	<1% FS (+/-1G; 5-1000Hz)
Mounting Position Effect	None
RFI/EMI	CE-Compliant
Temperature Effect	0.02% FS/°F (-40° to 180°F [-40° to 82°C])
Storage Temperature	-40°to 200°F (-40 to 93°C)
Approximate Weight	3.0 lbs, 1.35 kg

The secret to the Type 2000's precise, reliable performance under a variety of demanding environmental conditions is a patented piezo-ceramic actuator with many industry-wide firsts.

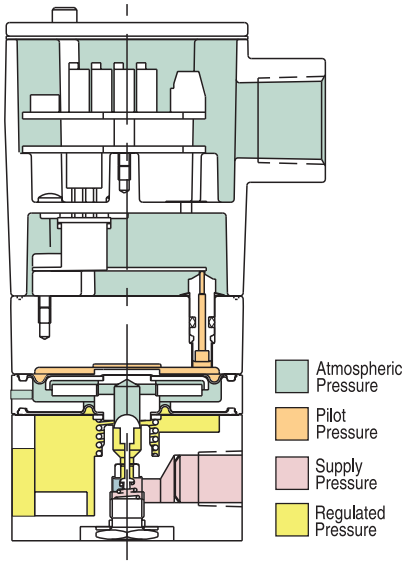

Air Quality

Instrument-quality air consists of:

a. A dew point less than 35° F
b. No particles larger than three microns
c. Maximum oil content of 1 ppm

It is mandatory for the user to install a suitably rated NRTL Listed or Certified conduit seal

TYPE 2000: REGULATED PRESSURE VS. FLOW

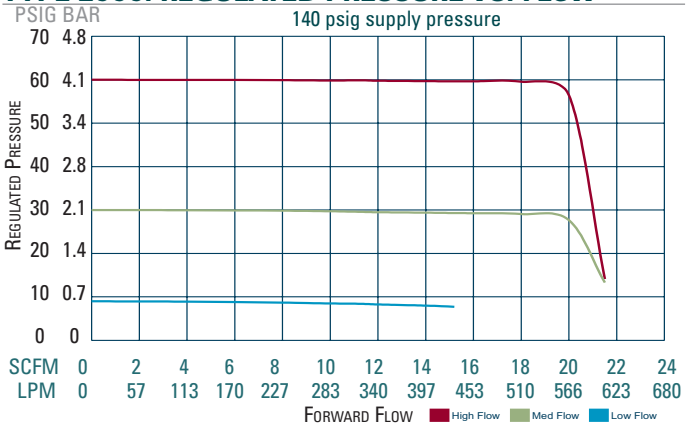

Type 2000 Mounting Options

Mounting Method	Intrinsically-Safe (S) Model	Explosion-Proof (E) Model
In-Line	Yes	Yes
Direct Mounting	Side or Bottom Holes	Side or Bottom Holes
Panel Bracket	Supplied	Accessory
Valve Bracket	Accessory	Supplied
Pipe Bracket	Accessory	Accessory
DIN-Rail Bracket	Accessory	Accessory
Manifold Plate	Accessory	Accessory

Type 2000 Ordering Information

2 K

	Enclosure
S	Intrinsically Safe
E	Explosion Proof
	Electrical Port[1]
N	1/2 NPT Conduit
M	20mm Conduit "S" Unit Only
H	Hirschmann[5]
T	Terminal Block[2] "S" Unit Only
	Pneumatic Ports
N	NPT
T	BSPT
P	BSPP
M	Manifold Mount[3]
	Agency Approval[6]
F	FM/CSA
C	ATEX "S" Unit Only
G	FM Natural Gas Approved for US and Canada[4]
	Electrical Input
42	4-20 mA
05	0-5 V
15	1-5 V
19	1-9 V
11	1-10 V
01	0-10 V
	Mode
D	Direct Acting
R	Reverse Acting
	Mode
F	Full Range
H	Split Range High
L	Split Range Low
	Pneumatic Output
005	0-5 PSIG 0-0.3 BAR
015	0-15 PSIG 0-1.0 BAR
315	3-15 PSIG 0.2-1.0 BAR
117	1-17 PSIG 0.07-1.2 BAR
030	0-30 PSIG 0-2.1 BAR
630	6-30 PSIG 0.4-2.1 BAR
327	3-27 PSIG 0.2-1.9 BAR
060	0-60 PSIG 0-4.1 BAR
	Maximum Supply for these regulators is 100 PSIG
100	0-100 PSIG 0-6.9 BAR
120	0-120 PSIG 0-8.3 BAR
	Maximum Supply for these regulators is 140 PSIG
	Special
00	None

It is mandatory for the user to install a suitably rated NRTL Listed or Certified conduit seal

Vertical or Horizontal Seals

All Seal housings are approximate 3-1/2" in laying length and 1-1/2" OD

Description	Part Number
1/2" Aluminum	SF-04AMM
1/2" Aluminum w/nipple	SF-04AMF
1/2" Iron	SF-04IMM
1/2" Iron 2/nipple	SF-04IMF

Type 2000 Accessories

	Part Number
Panel Mounting Kit	010-135-000
Valve Mounting Kit	010-134-000
2" Pipe Mounting Kit (Valve Mounting Kit is required)	010-143-000
DIN Rail Adapter	010-115-000
Manifold Adapter Kit	971-158-000
Filter Kit, 60 microns	010-139-000
Pressure Gauge Kit 15 PSIG (1 BAR)	010-138-000
Pressure Gauge Kit 30 PSIG (2.1 BAR)	010-138-001

Type 2000 Notes

[1] Availability		Enclosure S	Enclosure E
Electrical Port	N	Yes	Yes
	M	Yes	Yes
	H	Yes	No
	T	Yes	No

[2] NEMA 4X / IP66 not available

[3] Bottom O-Ring Ports

[4] NRTL listed or certified conduit seal installed by user

[5] Not Agency Approved

[6] Agency Approval			F FM/CSA	C ATEX	G Gas
Enclosure	S	Intrinsic Safety	Yes	Yes	No
	E	Explosion Proof	Yes	No	Yes

Terminal Block	I/P Transducer	E/P Transducer
S	N/C	+ Signal
+	+ Signal	+ Power Supply
-	- Signal	Common

Type 2000 Wiring Connections and Switch Positions

Switch #	1: PSIG	BAR	2	3	4	5	6: psig	BAR	7	8	9
ON	0-5 0-15 3-15 1-17 0-30 3-27 6-30 0-100	0-0.3 0-1.0 0.2-1.0 0.07-1.2 0-2.1 0.2-1.9 0.4-2.1 0-6.9	1-5 VDC 0-5 VDC	Split Low	Voltage Input (E/P)	Split Low Full	0-5 0-15 1-17 0-30 0-60 0-100 0-120	0-0.3 0-1.0 0.07-1.2 0-2.1 0-4.1 0-6.9 0-8.3	Reverse Acting	Full	I/P
Switch #	**1: PSIG**	**BAR**	**2**	**3**	**4**	**5**	**6: psig**	**BAR**	**7**	**8**	**9**
OFF	0-60 0-120	0-4.1 0-8.3	1-9 VDC 0-10 VDC 4-20 mA	Full Split High	Current Input (I/P)	Split High	3-15 3-27 6-30	0.2-1.0 0.2-1.9 0.4-2.1	Direct Acting	Split Low Split High	E/P

Type 2000 Dimensions

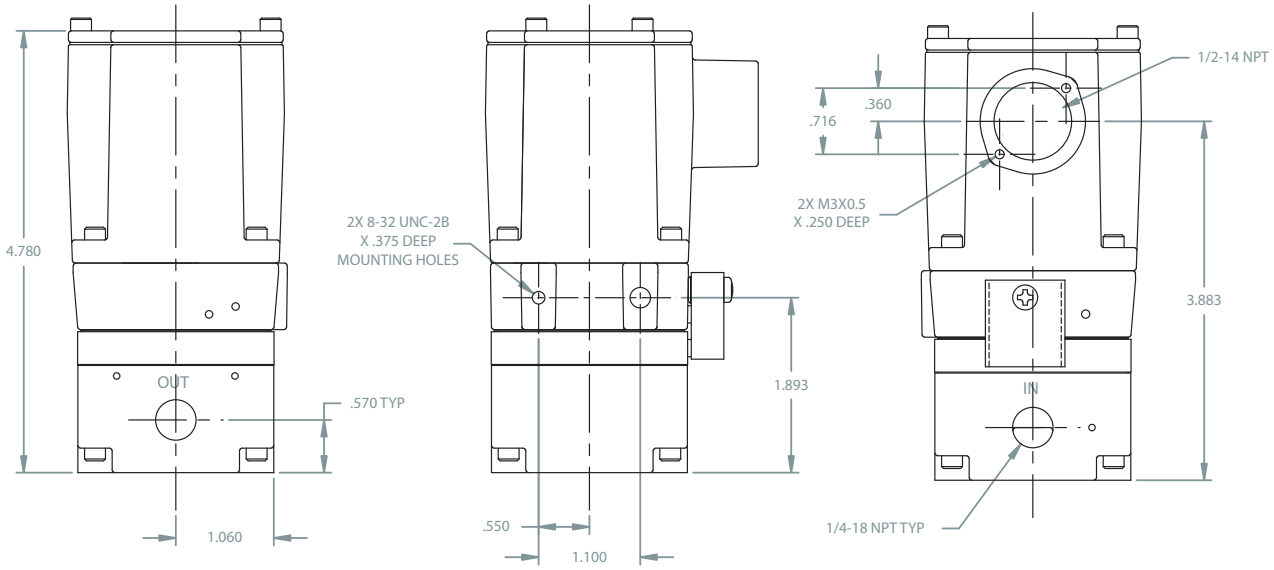

mm
inches

Type 2000 Explosion Proof Dimensions

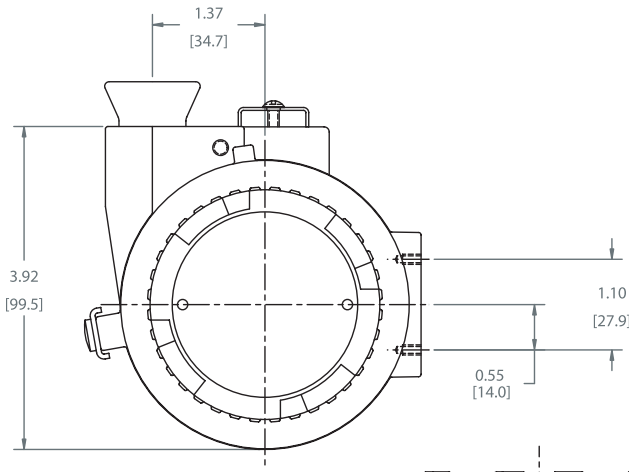

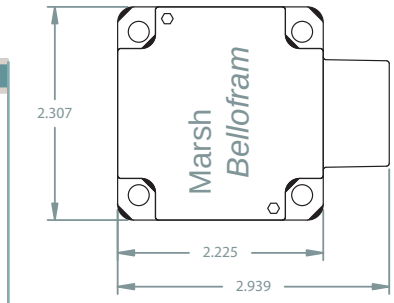

mm
inches

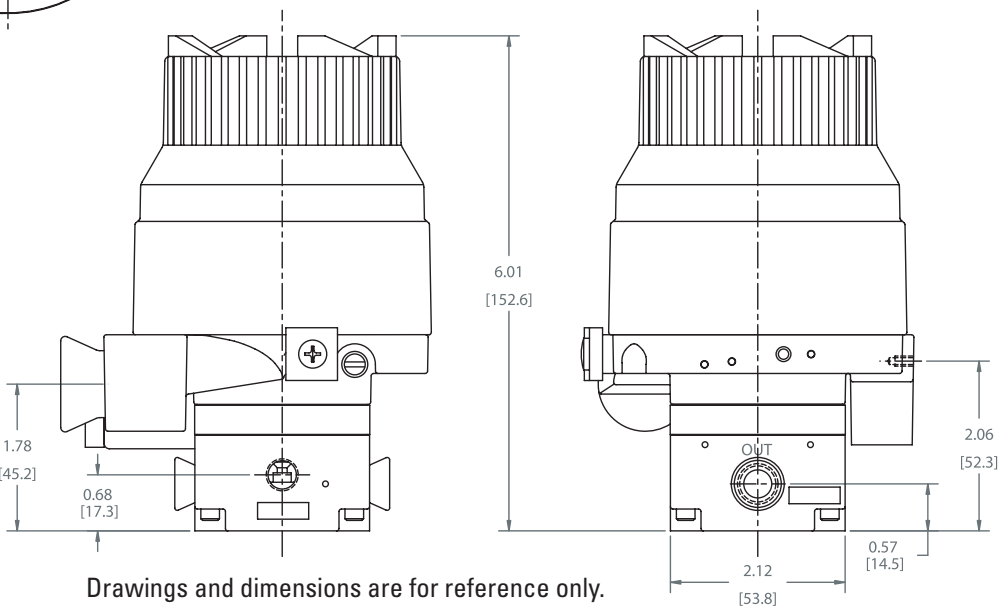

Drawings and dimensions are for reference only.