Honeywell

HC900 Process Control Designer

Function Block Reference Guide

Doc. No.51-52-25-109
Revision: 30
Revision Date: January 2022

Honeywell Process Solutions

Notices and Trademarks

Copyright 2022 by Honeywell
Revision 30, January 2022

WARRANTY/REMEDY

Honeywell warrants goods of its manufacture as being free of defective materials and faulty workmanship. Contact your local sales office for warranty information. If warranted goods are returned to Honeywell during the period of coverage, Honeywell will repair or replace without charge those items it finds defective. The foregoing is Buyer's sole remedy and is in lieu of all other warranties, expressed or implied, including those of merchantability and fitness for a particular purpose. Specifications may change without notice. The information we supply is believed to be accurate and reliable as of this printing. However, we assume no responsibility for its use.

While we provide application assistance personally, through our literature and the Honeywell web site, it is up to the customer to determine the suitability of the product in the application.

Honeywell Process Solutions

1250 W Sam Houston Pkwy S

Houston, TX 77042

ControlEdge HC900 is a U.S. trademark of Honeywell

Other brand or product names are trademarks of their respective owners.

About This Document

Abstract

The **"Process Control Designer" configuration software** program is used for ControlEdge HC900 Controller and Operator Interface configuration and operates on a PC with Windows™ 7 (32-bit and 64-bit), Windows™ 8.1 (32-bit and 64-bit), Windows™ 10 (32-bit and 64-bit), Windows Server 2016, and Windows Server 2019. The software program uses graphic symbols and line drawing connections to create custom control strategies. Menus are provided in the software to allow selection of screens for the operator interface and to customize screen access methods and operator keys. Completed configurations are loaded into the control system using a dedicated communication port in the controller.

References

The following list identifies all documents that may be sources of reference for material discussed in this publication.

Document Title	Doc ID
ControlEdge HC900 Controller Technical Overview	51-52-03-31
Legacy ControlEdge HC900 Controller Installation and User Guide	51-52-25-107
ControlEdge HC900 Operator Interface User Guide	51-52-25-108
ControlEdge HC900 Control Designer User Guide	51-52-25- 110
ControlEdge HC900 Control Communications User Guide	51-52-25-111
900 Control Station For use with ControlEdge HC900	51-52-25-148

Contact Information

For Europe, Asia Pacific, North and South America contact details, refer to the back page of this manual or the appropriate Honeywell Solution Support web site:

Honeywell Organization	WWW Address (URL)
Corporate	http://www.honeywell.com
Honeywell Process Solutions	http://hpsweb.honeywell.com/ps
HPS Technical tips	http://content.honeywell.com/ipc/faq

Telephone and Email Contacts

Area	Organization	Phone Number
United States and Canada	Honeywell Inc.	1-800-343-0228 Customer Service 1-800-423-9883 Global Technical Support
Global Email Support	Honeywell Process Solutions	Email: (Sales) **FP-Sales-Apps@Honeywell.com** or (TAC) **hfs-tac-support@honeywell.com**

Symbol Definitions

The following table lists those symbols that may be used in this document to denote certain conditions.

Symbol	Definition
DANGER	This **DANGER** symbol indicates an imminently hazardous situation, which, if not avoided, **will result in death or serious injury**.
WARNING	This **WARNING** symbol indicates a potentially hazardous situation, which, if not avoided, **could result in death or serious injury**.
CAUTION	This **CAUTION** symbol may be present on Control Product instrumentation and literature. If present on a product, the user must consult the appropriate part of the accompanying product literature for more information.
CAUTION	This **CAUTION** symbol indicates a potentially hazardous situation, which, if not avoided, **may result in property damage**.
	WARNING **PERSONAL INJURY:** Risk of electrical shock. This symbol warns the user of a potential shock hazard where HAZARDOUS LIVE voltages greater than 30 Vrms, 42.4 Vpeak, or 60 Vdc may be accessible. **Failure to comply with these instructions could result in death or serious injury.**
	ATTENTION, Electrostatic Discharge (ESD) hazards. Observe precautions for handling electrostatic sensitive devices
	Protective Earth (PE) terminal. Provided for connection of the protective earth (green or green/yellow) supply system conductor.
	Functional earth terminal. Used for non-safety purposes such as noise immunity improvement. NOTE: This connection shall be bonded to protective earth at the source of supply in accordance with national local electrical code requirements.
	Earth Ground. Functional earth connection. NOTE: This connection shall be bonded to Protective earth at the source of supply in accordance with national and local electrical code requirements.
	Chassis Ground. Identifies a connection to the chassis or frame of the equipment shall be bonded to Protective Earth at the source of supply in accordance with national and local electrical code requirements.

Table of Contents

Notices and Trademarks ii

About This Document iii

Abstract iii

References iii

Contact Information iv

Symbol Definitions v

Table of Contents vi

Tables xii

Figures xv

Introduction 1

Overview 1

Accessing function block properties 1

Normal Scan vs. Fast Scan Function Blocks 2

Block Order 2

Function Blocks 3

Introduction 3

Function block listings 3

ABS Absolute Value Function Block 12

ADD Function Block 14

4ADD Function Block 15

AGA8DL Function Block 16

AGA8GS Function Block 25

AGA3O Function Block 30

AGA7TM Function Block 35

AGA9UM Function Block 39

AI Function Block 43

Analog Input Voting 49

ALMGR Alarm Group Function Block 59
ALT Alternator Function Block 61
AMB Auto/Manual Bias Function Block 70
ANAIMP Safety Analog Import Function Block 76
2AND Function Block 81
4ALM Function Block 83
4AND Function Block 85
8AND Function Block 87
AO Function Block 89
Analog Output Validated 92
ASYS Analog System Status Function Block 97
BCD Function Block 100
BOOL Boolean Logic Function Block 102
CASTA Configuration Access Status 105
CALEVT Calendar Event Function Block 108
CARB Carbon Potential Function Block 116
CAVG Continuous Average Function Block 134
CMPR Comparison Calculation Function Block 137
DC Device Control Function Block 138
DCMP Deviation Compare Function Block 143
DDEC Digital Decoder Function Block 145
DENC Digital Encoder Function Block 147
DEWP Function Block 149
DI Function Block 152
DIGIMP Safety Digital Import Function Block 155
Digital Input Voting 159
8DI Function Block 163
DIV Function Block 166
DLAY Function Block 168
DO Function Block 170
Digital Output Validated 173
DSW Digital Switch Function Block 180
ENTH Humidity and Enthalpy Function Block 181

FGEN Function Generator Function Block 183
FI Frequency Input 187
FMON Fault Monitor Function Block 191
FRCP Force Present Function Block 194
FSS Four Selector Switch Function Block 196
FSYS Fast Logic System Monitor 199
HART Command3 - Read Dynamic Variables And Loop Current 201
HART Command48 - Read Additional Device Status 204
HLLM High Low Limiter Function Block 207
HMON High Monitor Function Block 209
HOA Hand/Off/Auto Switch Function Block 211
HSEL High Selector Function Block 216
IMM - IO Module Monitor Block 218
LDLG Lead/Lag Function Block 220
LMON Low Monitor Function Block 223
LPSW Loop Switch Function Block 225
LSEL Low Selector Function Block 227
LTCH Latch Function Block 228
MATH Function Block 230
Multiple Alarm with Hysteresis 234
STK Stack light 238
MBR Modbus Read Function Block 240
MBS Modbus Device Function Block 244
MBW Modbus Write Function Block 254
MDSW Mode Switch Function Block 258
MDFL Mode Flag Function Block 260
MMA Min/Max/Avg Function Block 262
ALarM output for deviations 265
Turns ON ALM when any input is outside the configured number of standard deviations when the configuration parameter DEV > 0. 265
MUL Multiplier Function Block 271
4MUL Multiplier (4 input) Function Block 273
NEG Negate Function Block 275

NOT Function Block 276
ONDT On Delay Timer Function Block 277
OFDT Off Delay Timer Function Block 280
ON/OFF Function Block 282
2OR Function Block 291
4OR Function Block 293
8OR Function Block 295
PB Pushbutton Function Block 298
PDE Peer Data Exchange Function Block 301
PDR Peer Data Read Function Block 306
PDW Peer Data Write Function Block 308
PI Pulse Input 310
POUT Pulse Output 313
PID Function Block 316
PPO Position Proportional Output Function Block 339
PSYC Psychrometric Calculations Function Block 344
PTMR Periodic Timer Function Block 346
QDT Quadrature Function Block 349
RAI Function Block 352
RACK Function Block 357
RAMP Function Block 359
RCON Read Constant Function Block 366
RCP Recipe Selector Function Block 368
RH Relative Humidity Function Block 370
ROC Rate of Change Function Block 372
RSTAT Redundancy Status Function Block 375
RSW Rotary Switch Function Block 376
RTC Real Time Clock Function Block 378
RTMR Resettable Timer Function Block 379
RUIO-AI Function Block 382
RUIO-AO Function Block 387
RUIO-DI Function Block 391
RUIO-DO Function Block 393

SAFPDE Safety Peer Monitor Function Block 396
SCB Scale and Bias Function Block....400
SEQ Sequencer Function Block 402
SPEV Setpoint Programming Event Decoder Function Block 409
SPP Function Block....412
SPS Setpoint Scheduler Function Block....422
SPSA Setpoint Scheduler Auxiliary Setpoint Function Block 429
SQRT Function Block 430
STG Stage Function Block 432
STFL Setpoint Scheduler Stage Flags Function Block....439
STRIG Selectable Trigger Function Block....440
STSW Setpoint Scheduler State Switch Function Block....442
SUB Subtraction Function Block 443
4SUB Function Block....444
SW Analog Switch Function Block....445
SYNC Function Block....447
TAHD Track and Hold Function Block....449
TCPR Function Block 451
TCPS Function Block....455
TCPW Function Block 464
TGFF Toggle Flip Flop Function Block....468
TMDT Time and Date Function Block....470
TOT Totalizer Function Block 471
TPO Time Proportional Output Function Block....474
TPSC (3POS) Function Block 477
TRIG Trigger Function Block 492
TRND Trend Rate Function Block....494
TRPT Trend Point Function Block....496
UIO-AI Function Block....499
UIO-AO Function Block 503
UIO-DI Function Block....508
UIO-DO Function Block 510
UPDN Up/Down Function Block....513

VLIM Velocity Limiter Function Block 515
WCON Write Constant Function Block 517
WTUN Write Tuning Constants Function Block 519
WVAR Write Variable Function Block 521
XFR Bumpless Analog Transfer Switch Function Block 523
XOR Function Block 525
5XYRB Function Block 526
5XYRT Function Block 530
6XYRT Function Block 533
6XYRWG 538

Tables

Table 1 Function blocks by category 3
Table 2 Function blocks alphabetically 7
Table 3 AGA8DL General tab configuration parameters 18
Table 4 AGA8DL Detail tab configuration parameters 19
Table 5 AGA Error Codes 21
Table 6 AGA8GS General tab configuration parameters 26
Table 7 AGA8GS Detail tab configuration parameters 27
Table 8 AGA3O Orifice tab configuration parameters 31
Table 9 AGA3O Flow Rates tab configuration parameters 33
Table 10 AGA7TM Turbine tab configuration parameters 36
Table 11 AGA7TM Flow Rates tab configuration parameters 37
Table 12 AGA9UM Ultrasonic tab configuration parameters 40
Table 13 AGA9UM Flow Rates tab configuration parameters 41
Table 14 Analog Input configuration parameters 44
Table 15 ControlEdge HC900 Input Types and Ranges 46
Table 16 Analog alarm configuration parameters 57
Table 17 ALT general tab parameters 65
Table 18 ALT sequence tab parameters 68
Table 19 AMB General tab configuration parameters 71
Table 20 AMB Start Restart tab configuration parameters 72
Table 21 AMB Range/limit tab configuration parameters 73
Table 22 AMB Alarm tab configuration parameters 74
Table 23 Analog output configuration parameters 90
Table 24 Analog system status block outputs 98
Table 25 BOOL function block configuration parameters 104
Table 26 Pin details of CASTA function block 106
Table 27 Calendar Event Details tab configuration parameters 110
Table 28 Calendar Event Special Days tab configuration parameters 112
Table 29 Calendar Event Setpoint tab configuration parameters 114
Table 30 CARB General tab configuration parameters 119
Table 31 CARB Start/Restart tab configuration parameter 120
Table 32 CARB RSP tab configuration parameters 122
Table 33 CARB Range/limit tab configuration parameters 124
Table 34 CARB Tuning tab configuration parameters 125
Table 35 CARB Accutune III tab configuration parameters 127
Table 36 CARB Alarms tab configuration parameters 130
Table 37 Carbon Potential tab configuration parameters 131
Table 38 Continuous average configuration parameters 135
Table 39 Monitored events and device states 140
Table 40 Device control function block parameters 141
Table 41 DCMP configuration parameters 144
Table 42 Dewpoint function block parameters 150
Table 43 Digital input configuration parameters 153
Table 44 Eight Digital input configuration parameters 164
Table 45 On Delay/Off Delay configuration parameters 169
Table 46 Digital output configuration parameters 171
Table 47 Eight Digital output configuration parameters 178
Table 48 Function generator configuration parameters 184
Table 49 Frequency Input configuration parameters 189
Table 50 Force Present configuration parameters 195
Table 51 Four Selector Switch (FSS) configuration parameters for operator interface display 197
Table 52 Fast logic system status block outputs 200

Table 53 Command 3 Configuration Parameters 203
Table 54 Command48 Configuration Parameters 206
Table 55 High low limit configuration parameters 208
Table 56 High monitor function block configuration parameters 210
Table 57 HOA general tab parameters 212
Table 58 HOA feedback signal tab parameters 213
Table 59 Lead lag configuration parameters 221
Table 60 Low monitor function block configuration parameters 224
Table 61 Math function block configuration parameters 232
Table 62 MALM function block configuration parameters 237
Table 63 MBR function block configuration parameters 241
Table 64 MBS Block General tab configuration parameters 247
Table 65 MBS Block Read tab configuration parameters 249
Table 66 MBS Block Write tab configuration parameters 251
Table 67 MBW function block configuration parameters 255
Table 68 Min/Max/Ave/Sum function block configuration parameters 264
Table 69 Mass flow function block configuration parameters 269
Table 70 On delay timer function block example 278
Table 71 Off delay timer configuration parameters 281
Table 72 ON/OFF General tab configuration parameters 284
Table 73 ON/OFF Start/Restart tab configuration parameter 286
Table 74 ON/OFF RSP tab configuration parameters 287
Table 75 ON/OFF Range/limit tab configuration parameters 288
Table 76 ON/OFF Alarm tab configuration parameters 289
Table 77 Pushbutton function group configuration 299
Table 78 PDE General tab configuration parameters 303
Table 79 PDE Read tab configuration parameters 303
Table 80 PDE Write tab configuration parameters 304
Table 81 Pulse Input Configuration Parameters 311
Table 82 Pulse Output Configuration Parameters 314
Table 83 PID General tab configuration parameters 320
Table 84 PID Start/Restart tab configuration parameter 321
Table 85 PID RSP tab configuration parameters 323
Table 86 PID Range/limit tab configuration parameters 325
Table 87 PID Tuning tab configuration parameters 327
Table 88 PID Accutune III tab configuration parameters 328
Table 89 PID Alarms tab configuration parameters 332
Table 90 Position Proportional Motor Control 341
Table 91 PSYC function block configuration parameters 345
Table 92 PT function block configuration parameters 347
Table 93 QDT parameters 350
Table 94 Analog Input with Remote C/J configuration parameters 353
Table 95 ControlEdge HC900 Input Types and Ranges for RAI Function Block 355
Table 96 RAMP general tab parameters 363
Table 97 RAMP tabs parameters 364
Table 98 Read constant configuration data 367
Table 99 Metric units 371
Table 100 ROC configuration parameters 373
Table 101 Redundancy Status configuration parameters 375
Table 102 RTMR configuration parameters 380
Table 103 RUIO-AI configuration parameters 383
Table 104 Analog output configuration parameters 389
Table 105 RUIO Digital input configuration parameters 392
Table 106: Configurable Parameters RUIO DO 394
Table 107 SCB configuration parameters 401

Table 108 SPP inputs and current state 415
Table 109 Restart scenario options 415
Table 110 SPP configuration parameters 416
Table 111 Tag/Failsafe configuration parameters 424
Table 112 Main Output labels configuration parameters 425
Table 113 Auxiliary Output labels configuration parameters 426
Table 114 Event labels configuration parameters 427
Table 115 SQRT configuration parameters 431
Table 116 STG general tab parameters 434
Table 117 Default PV sources and compare type operators 436
Table 118 STG Stage Tabs parameters 437
Table 119 TCPR function block configuration parameters 452
Table 120 TCPS Block General tab configuration parameters 458
Table 121 TCPS Block Read tab configuration parameters 459
Table 122 TCPS Block Write tab configuration parameters 462
Table 123 TCPW function block configuration parameters 465
Table 124 Time and Date configuration parameters 470
Table 125 TOT configuration parameters 472
Table 126 TPO configuration parameters 476
Table 127 TPSC General tab configuration parameters 479
Table 128 TPSC Start/Restart tab configuration parameter 481
Table 129 TPSC RSP tab configuration parameters 482
Table 130 TPSC Range/limit tab configuration parameters 484
Table 131 TPSC Tuning tab configuration parameters 486
Table 132 TPSC Accutune tab configuration parameters 487
Table 133 TPSC Alarms tab configuration parameters 489
Table 134 TPSC Motor tab configuration parameters 491
Table 135 TRND block configuration parameters 495
Table 136 UIO-AI configuration parameters 500
Table 137 Analog output configuration parameters 505
Table 138 UIO Digital input configuration parameters 509
Table 139: Configurable Parameters UIO DO 511
Table 140 Up/down configuration parameters 514
Table 141 VLIM Configuration Parameters 516
Table 142 XFR switch configuration data 524

Figures

Figure 1 ABS function block example 13
Figure 2 ADD function block example 14
Figure 3 4ADD function block example 15
Figure 4 AGA8DL function block example 24
Figure 5 AGA8GS function block example 29
Figure 6 AGA3O function block example 34
Figure 7 AGA7TM function block example 38
Figure 8 AGA9UM function block example 42
Figure 9 AI function block example 48
Figure 10 - ALM Alarm Function Block 54
Figure 11 ALM function block example 58
Figure 12 ALMGR Function Block Example 60
Figure 13 ALT function block example 69
Figure 14 AMB function block example 75
Figure 15 2AND function block example 82
Figure 16 4ALM function block example 84
Figure 17 4AND function block example 86
Figure 18 8AND function block example 88
Figure 19 AO function block example 91
Figure 20 BCD function block example 101
Figure 21 BOOL function block example 104
Figure 22 CALEVT function block example 115
Figure 23 CARB function block examples 133
Figure 24 CAVG function block example 136
Figure 25 CMPR function block example 137
Figure 26 DC function block example 142
Figure 27 DCMP function block example 144
Figure 28 DDEC function block example 146
Figure 29 DENC function block example 148
Figure 30 DEWP function block example 151
Figure 31 Digital input function block example 154
Figure 32 8Point DI function block example 165
Figure 33 DIV function block example 167
Figure 34 DO function block example 172
Figure 35 DO-V function block 8DO Function Block 176
Figure 36 8 Point DO function block example 179
Figure 37 DSW function block example 180
Figure 38 ENTH function block example 182
Figure 39 FGEN function block example 186
Figure 40 FI function block example 190
Figure 41 FSS function block example 198
Figure 42 HLLM function block example 208
Figure 43 HMON function block example 210
Figure 44 HOA function block example 215
Figure 45 HSEL Function Block Example 217
Figure 46 IMM function block 219
Figure 47 LDLG function block example 222
Figure 48 LMON function block example 224
Figure 49 LPSW function block example 226
Figure 50 LSEL function block example 227
Figure 51 LTCH function block example 229
Figure 52 MATH function block example 233

Figure 53 MBR function block example 243
Figure 54 MBS function block example 253
Figure 55 MBW function block example 257
Figure 56 MDSW function block example 259
Figure 57 MDFL function block example 261
Figure 58 MMA function block example 264
Figure 59 MSF function block example 270
Figure 60 MUL function block example 272
Figure 61 4MUL function block example 274
Figure 62 NEG function block example 275
Figure 63 NOT function block example 276
Figure 64 ONDT function block example 279
Figure 65 OFDT function block example 282
Figure 66 ON/OFF function block example 290
Figure 67 2OR function block example 292
Figure 68 4OR function block example 294
Figure 69 8OR function block example 297
Figure 70 PB function block example 300
Figure 71 PDE Function Block Example 305
Figure 72 PI function block example 312
Figure 73 POUT function block example 315
Figure 74 PID function block example 333
Figure 75 Duplex control example 334
Figure 76 Cascade control example 335
Figure 77 Ratio control example 336
Figure 78 Cascade control of a boiler drum level - basic 337
Figure 79 Cascade control of a boiler drum level - 3 element feedwater control 338
Figure 80 Position Proportional Motor Control 343
Figure 81 PSYC function block example 345
Figure 82 PT function block example 348
Figure 83 Quadrature function block example 351
Figure 84 RAI function block example 356
Figure 85 Rack Monitor function block example 358
Figure 86 RAMP function block example 365
Figure 87 RCON function block example 367
Figure 88 RCP function block example 369
Figure 89 RH function block example 371
Figure 90 ROC function block responses 374
Figure 91 ROC function block example 374
Figure 92 RSW function block example 377
Figure 93 RTC function block example 378
Figure 94 Timing diagram for resettable timer 381
Figure 95 SAFPDE function block examples 399
Figure 96 SCB function block examples 401
Figure 97 Sequencer function block example - Part 1 407
Figure 98 Sequencer function block example - Part 2 407
Figure 99 Sequencer function block example - Part 3 408
Figure 100 SPEV function block example 411
Figure 101 PID with setpoint programmer and guaranteed soak 417
Figure 102 PID with setpoint programmer and event outputs 418
Figure 103 Alternate methods for actuating SP programmer START/HOLD/RESET functions 419
Figure 104 Using the setpoint programmer AUX output 420
Figure 105 Controlled restart after power loss 421
Figure 106 Setpoint scheduler function block suite 428

Figure 107 SQRT function block example 431
Figure 108 STG function block example 438
Figure 109 STRIG function block example 441
Figure 110 SUB function block example 443
Figure 111 4SUB function block example 444
Figure 112 SW function block example 446
Figure 113 SYNC function block example 448
Figure 114 TAHD function block example 450
Figure 115 TCPR function block example 454
Figure 116 TCPS function block example 463
Figure 117 TCPW function block example 467
Figure 118 TGFF function block example 469
Figure 119 TOT function block examples 473
Figure 120 TPO function block example 476
Figure 121 TPSC function block example 491
Figure 122 TRIG function block example 493
Figure 123 TRPT Dialog to configure points by signal tag 497
Figure 124 TRPT Dialog to configure points by Modbus Address 497
Figure 125 TRND and TRPT function block example 498
Figure 126 UIOAI function block example 502
Figure 127 UIO-AO function block example 506
Figure 128 UIODI function block example 509
Figure 129 UIODO function block example 512
Figure 130 UPDN function block example 514
Figure 131 VLIM function block example 516
Figure 132 WTUN function block example 520
Figure 133 XFR function block example 524
Figure 134 XOR function block example 525
Figure 135 5XYRB function block example 529
Figure 136 5XYRT function block example 532
Figure 137 6XYRT function block example 537
Figure 138 6XYRWG function block example 540

Introduction

Overview

Purpose of this section

This Reference Guide presents detailed reference data for each function block. The reference data is organized in **alphabetical** order by the Function Block type identification label.

There is a list of Function Blocks **grouped in categories** as they appear on the Process Control Designer.

The presented data covers each control blocks

- function,
- inputs/outputs,
- point name,
- configuration parameters
- index numbers (used for reading [RCON] and writing [WCON] block parameter constants)

ATTENTION

Select the index number of the required parameter from the specific function block reference data and enter it in the appropriate field in the “Read Constant Properties” (RCON) or “Write Constant Properties” (WCON) dialog box.

- technical reference
- examples

Of course, data varies based on what is pertinent for each function block since they do not all have a point name or configuration parameters and do not all require technical reference information.

Reader assumptions

It is assumed that you are familiar with the operation of the ControlEdge HC900 Control Designer and its help or its manual, ControlEdge HC900 Control Designer User's Guide (51-52-25-110).

Accessing function block properties

Double click on the function block to access the function block properties dialog box.

Normal Scan vs. Fast Scan Function Blocks

The Worksheet Toolbox in the HC Designer is a dockable window listing all function blocks. The name of the active configuration appears at the top of the window. Function blocks are categorized under Normal Scan and Fast Scan shown at tabs at bottom of window.

```
Click on either tab to display its available function blocks.
```

All function blocks are available under the Normal Scan tab. **Normal Scan** blocks are processed every 500 ms. **Fast Scan** blocks are indicated by and are processed up to every 10 ms depending on CPU model and number of function blocks.

Block Order

Block Order is the order in which function blocks are executed in the control strategy. By default, Block Order is based on the Block Number, that is, lower block numbers are executed first. For example, the first block you add to a new configuration has block number 101 and block order 1. The second block is block number 102 and block order 2, and so on. Block numbers are assigned in the sequence that they are programmed. Block numbers: from 101 to 500 (CPU C30), 101 to 2100 (CPU C50), 101 to 5100 (CPU C70/C75). If there is a gap in block numbers—such as after blocks have been deleted—all remaining blocks are executed from lowest to highest.

You can override the default block execution order specified by the Block Numbers and change the execution order of a block or multiple blocks.

To change block order, right-click on a Function Block and select Execution Order. Select and drag blocks up or down the list and put them in the order that suits your control strategy.

To change the execution order individually, double-click on the top area of the function block that identifies the block type and number. A dialog will appear to allow changing the execution sequence of the block. Keep in mind that changing the order number of a single block will also change the order numbers of other blocks.

Block Properties Dialog Boxes

Some blocks contain dialog boxes that contain active fields that contain configurable parameters, and some properties dialog boxes are divided into tabs. You must configure these block parameters to the desired values or selections that match your operating requirements.

The PID properties dialog box is an example of dialog box divided into seven-tab cards

GENERAL
START/RESTART
RSP
RANGE/LIMIT
TUNING
ACCUTUNE III
ALARMS

Click on the tab to access the properties for that tab.

Parameter Tables

Parameter tables accompany the dialog box graphic and describe the parameters and the value or selection available for the active fields.

Function Blocks

Introduction

While you can determine the function of many blocks just from their labels and Input/output abbreviations, the purpose of others may not be apparent. This section is designed to familiarize you with function blocks in general and provide detailed reference data for each block.

Function block listings

Function blocks are listed by category and alphabetically in Table 1 and Table 2.

Table 1 Function blocks by category

Category	Block Type	
IO Blocks		
	AI	Analog Input
	AI-V	Analog Input Voting
	AO	Analog Output
	AO-V	Analog Output Validated
	DI	Digital Inputs
	DI-V	Digital Input Voting
	8DI	8 Digital Inputs
	DO	Digital Output
	DO-V	Digital Output Validated
	8DO	8 Digital Outputs
	FI	Frequency Input
	PI	Pulse Input
	POUT	Pulse Output
	QDT	Quadrature
	TPO	Time Proportional Output
	UIO-AI	UIO Analog Input
	UIO-AO	UIO Analog Output
	UIO-DI	UIO Digital Input
	UIO-DO	UIO Digital Output
Loop Blocks		
	PID	PID
	ON	ON/OFF Function Block
	CARB	Carbon Potential

Category	Block Type	
	LPSW	Loop Switch
	MDSW	Mode Switch
	MDFL	Mode Flag
	TPSC	3 position step
	WTUN	Write Tuning Constants
	AMB	Auto/Manual Bias Function Block
SP Program		
	SPP	Programmer
	RCP	Recipe Selector
	SPEV	Setpoint Programming Event Decoder
	SYNC	Synchronize
Setpoint Scheduler		
	SPS	Setpoint Scheduler
	STSW	Setpoint Scheduler State Switch
	STFL	Setpoint Scheduler Stage Flags
	SPSA	Setpoint Scheduler Auxiliary Setpoint
Logic		
	2AND	AND – 2 Inputs
	4AND	AND – 4 Inputs
	8AND	AND – 8 Inputs
	2OR	2 – Input OR
	4OR	4 - Input OR
	8OR	8 – Input OR
	XOR	Exclusive OR
	NOT	NOT
	DSW	Digital Switch
	TRIG	Trigger
	STRIG	Selectable Trigger
	LTCH	Latch
	TGFF	Toggle Flip Flop
	BOOL	Boolean Logic
	PB	Pushbutton
	FSS	Four Selector Switch

Category	Block Type	
	HOA	Hand/Off/Auto Switch
	SEQ	Sequencer
Counters/Timers		
	RTMR	Resettable Timer
	PTMR	Periodic Timer
	UPDN	Up/Down
	OFDT	Off Delay Timer Function Block
	ONDT	On Delay Timer
	DLAY	On Delay/Off Delay Timer
	CALEVT	Calendar Event
	TMDT	Time and Date
	RTC	Real Time Clock
Math		
	SCB	Scale and Bias
	ADD	Addition 2 Input
	4ADD	Addition 4 Input
	SUB	Subtraction
	4SUB	4 – Input Subtract
	MUL	Multiplier
	4MUL	Multiplier (4 input)
	MATH	MATH
Calculations		
	CMPR	Comparison Calculation
	DCMP	Deviation Compare
	ABS	Absolute Value
	SQRT	Square Root
	MSF	Mass Flow Calculation
	MMA	Min/Max/Avg
	NEG	Negate
	DEWP	Dewpoint
	TOT	Totalizer
	CAVG	Continuous Average
	AGA3O	Orifice Meter Calc

Category	Block Type	
	AGA8DL	Gas Compressibility Detail Calc
	AGA8GS	Gas Compressibility Gross Method Calc
	AGA7TM	Turbine Meter Calc
Alarm Monitor		
	HMON	High Monitor
	LMON	Low Monitor
	ASYS	Analog System Status
	FSYS	Fast Logic System Monitor
	RACK	I/O Rack Monitor
	ALM	Analog Alarm
	ALMGR	Alarm Group
	FRCP	Force Present
	RSTAT	Redundancy Status
	FMON	Fault Monitor
	CASTA	Configuration Access Status
	MALM	Multiple Alarm with Hysteresis
	STK	Stack light
	IMM	IO Module Monitor
Signal Selector		
	HSEL	High Selector
	LSEL	Low Selector
	SW	Analog Switch
	RSW	Rotary Switch
	XFR	Bumpless Analog Transfer Switch
Auxiliary		
	FGEN	Function Generator
	LDLG	Lead/Lag
	HLLM	High Low Limiter
	VLIM	Velocity Limiter
	ROC	Rate of Change
	RCON	Read Constant
	WCON	Write Constant
	WVAR	Write Variable

Category	Block Type	
	TAHD	Track and Hold
	BCD	Binary Coded Decimal Translator
	STG	Stage
	RAMP	RAMP
	ALT	Alternator
	DENC	Digital Encoder
	DDEC	Digital Decoder
	DC	Device Control
	TRND	Trend Rate
	TRPT	Trend Point
Communications		
	PDE	Peer Data Exchange
	PDR	Peer Data Read
	PDW	Peer Data Write
	MBR	Modbus Read
	MBS	Modbus Device
	MBW	Modbus Write
	TCPR	Modbus/TCP Read
	TCPS	Modbus/TCP Device
	TCPW	Modbus/TCP Write
	5XYRB	5000 Transmitter Base Radio
	5XYRT	XYR 5000 Transmitter
	6XYRT	XYR 6000 Transmitter
	6XYRWG	XYR 6000 Wireless Gateway
	SAFPDE	Safety Peer Monitor
	ANAIMP	Safety Analog Import
	DIGIMP	Safety Digital Import
HVAC		
	RH	Relative Humidity
	ENTH	Humidity and Enthalpy
	PSYC	Psychrometric Calculations

Table 2 Function blocks alphabetically

FUNCTION BLOCK IDENTIFICATION LABEL	BLOCK DESCRIPTION
ABS	Absolute Value Function Block
ADD	Addition 2 Input
4ADD	Addition 4 Input
AGA8DL	Gas Compressibility Detail Calc
AGA8GS	Gas Compressibility Gross Method Calc
AGA3O	Orifice Meter Calc
AGA7TM	Turbine Meter Calc
AGA9UM	Ultrasonic Meter Calc
AI	Analog Input
AI-V	Analog Input Voting
ALM	Analog Alarm
ALMGR	Alarm Group
4ALM	4 Alarm with Hysteresis
ALT	Alternator
AMB	Auto/Manual Bias Function Block
2AND	AND – 2 Inputs
4AND	AND – 4 Inputs
8AND	AND – 8 Inputs
AO	Analog Output
AO-V	Analog Output Validated
ASYS	Analog System Status
4MUL	Multiplier (4 input)
4OR	4 - Input OR
4SUB	4 – Input Subtract
5XYRB	5000 Transmitter Base Radio
5XYRT	XYR 5000 Transmitter
6XYRT	XYR 6000 Transmitter
6XYRWG	XYR 6000 Wireless Gateway
8DI	8 Digital Inputs
8DO	8 Digital Outputs
8OR	8 – Input OR
AGA7TM	Turbine Meter Calc
ANAIMP	Safety Analog Import
BCD	Binary Coded Decimal Translator
BOOL	Boolean Logic
CALEVT	Calendar Event
CARB	Carbon Potential
CASTA	Configuration Access Status
CAVG	Continuous Average
CMPR	Comparison Calculation
DC	Device Control
DCMP	Deviation Compare
DDEC	Digital Decoder

FUNCTION BLOCK IDENTIFICATION LABEL	BLOCK DESCRIPTION
DENC	Digital Encoder
DEWP	Dewpoint
DI	Digital Inputs 2
DI-V	Digital Input Voting
DIGIMP	Safety Digital Import
DO-V	Digital Output Validated
DLAY	On Delay/Off Delay Timer
DO	Digital Output
DSW	Digital Switch
ENTH	Humidity and Enthalpy
FGEN	Function Generator
FI	Frequency Input
FMON	Fault Monitor
FRCP	Force Present
FSS	Four Selector Switch
FSYS	Fast Logic System Monitor
HLLM	High Low Limiter
HMON	High Monitor
HOA	Hand/Off/Auto Switch
HSEL	High Selector
IMM	IO Module Monitor
LDLG	Lead/Lag
LMON	Low Monitor
LPSW	Loop Switch
LSEL	Low Selector
LTCH	Latch
MATH	MATH
MALM	Multiple Alarm with Hysteresis
MBR	Modbus Read
MBS	Modbus Device
MBW	Modbus Write
MDFL	Mode Flag
MDSW	Mode Switch
MMA	Min/Max/Avg
MSF	Mass Flow Calculation
MUL	Multiplier
NEG	Negate
NOT	NOT
OFDT	Off Delay Timer
ON	ON/OFF
ONDT	On Delay Timer
2OR	2 – Input OR
PB	Pushbutton

FUNCTION BLOCK IDENTIFICATION LABEL	BLOCK DESCRIPTION
PDE	Peer Data Exchange
PDR	Peer Data Read
PDW	Peer Data Write
PI	Pulse Input
PID	PID
POUT	Pulse Output
PSYC	Psychrometric Calculations
PTMR	Periodic Timer
QDT	Quadrature
RACK	I/O Rack Monitor
RAMP	RAMP
RCON	Read Constant
RCP	Recipe Selector
RH	Relative Humidity .....
ROC	Rate of Change
RSTAT	Redundancy Status
RSW	Rotary Switch
RTC	Real Time Clock
RTMR	Resettable Timer
SAFPDE	Safety Peer Monitor
SCB	Scale and Bias
SEQ	Sequencer
SPEV	Setpoint Programming Event Decoder
SPEV	Setpoint Programming Event Decoder
SPS	Setpoint Scheduler
SPSA	Setpoint Scheduler Auxiliary Setpoint
SQRT	Square Root
STFL	Setpoint Scheduler Stage Flags
STG	Stage
STK	Stack Light
STRIG	Selectable Trigger
STSW	Setpoint Scheduler State Switch
SUB	Subtraction
SW	Analog Switch
SYNC	Synchronize
TAHD	Track and Hold
TCPR	Modbus/TCP Read
TCPS	Modbus/TCP Device
TCPW	Modbus/TCP Write
TGFF	Toggle Flip Flop
TMDT	Time and Date
TOT	Totalizer
TPO	Time Proportional Output

FUNCTION BLOCK IDENTIFICATION LABEL	BLOCK DESCRIPTION
TPSC	Three Position Step Control
TRIG	Trigger
TRND	Trend Rate
TRPT	Trend Point
UPDN	Up/Down
UIO-AI	UIO Analog Input
UIO-AO	UIO Analog Output
UIO-DI	UIO Digital Input
UIO-DO	UIO Digital Output
VLIM	Velocity Limiter
WCON	Write Constant
WTUN	Write Tuning Constants
WVAR	Write Variable
XFR	Bumpless Analog Transfer Switch
XOR	Exclusive OR

ABS Absolute Value Function Block

Description

The **ABS** label stands for **Absolute Value**.

This block is part of the *Calculations* category

Function

Calculate the absolute value of a single analog variable input. Useful for ensuring a positive output value.

- OUT = [X]

Input

X = Analog value to be modified.

Output

OUT = modified value.

ABS example

Figure 1 shows a Function Block Diagram configuration using an ABS function block to calculate the absolute value of the deviation between two analog inputs.

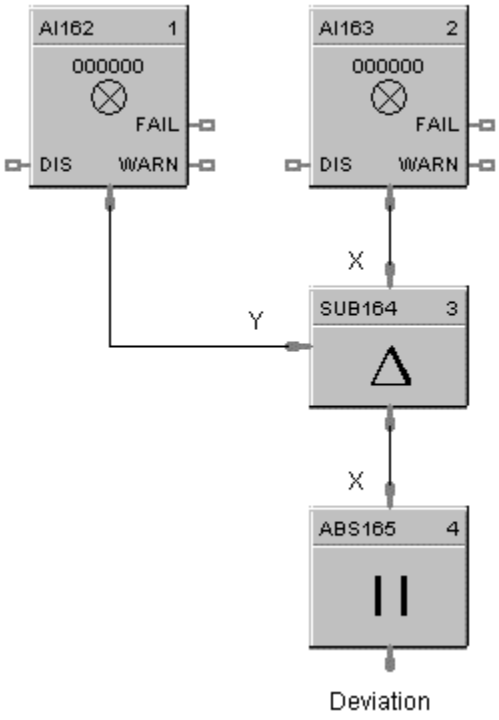

Figure 1 ABS function block example

ADD Function Block

Description

The ADD label stands for Addition Mathematical Operation (2 Inputs).

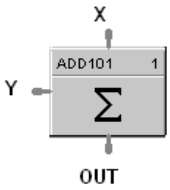

This block is part of the *Math* category.

Function

Add two inputs (X, Y) to get an output.

- **OUT** = X + Y

Input

X = First Analog Input
Y = Second Analog Input

Output

OUT = Sum of analog values

ADD example

Figure 2 shows a Function Block Diagram using an ADD function block to find the total flow rate as the sum of Flow 1 and Flow 2.

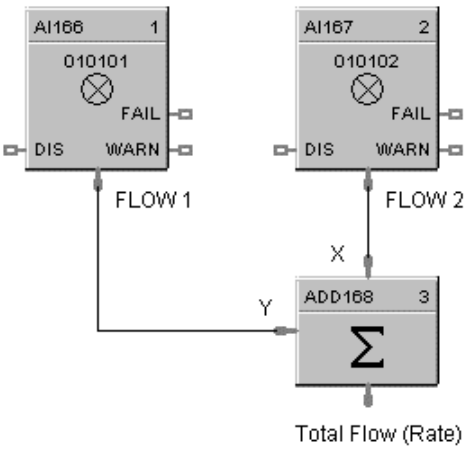

Figure 2 ADD function block example

4ADD Function Block

Description

The 4ADD label stands for Addition Mathematical Operation (4 Inputs).

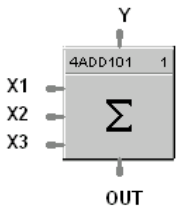

This block is part of the *Math* category.

Function

Add FOUR inputs (Y, X1, X2, and X3) to get an output.

- **OUT** = Y+ X1+ X2 + X3

Input

Y =First Analog Input
X1 = Second Analog Input
X2 = Third Analog Input
X3 = Fourth Analog Input

ATTENTION

All 4 inputs must be connected, or unused inputs inverted. If only 3 inputs are used, the 4th value should be inverted or connected to a constant value of 1.0.

Output

OUT = Sum of the analog values

4ADD example

Figure 3 shows a Function Block diagram using a 4ADD function block to find the total Flow rate as the sum of Flow 1, Flow 2, Flow 3, and Flow 4.

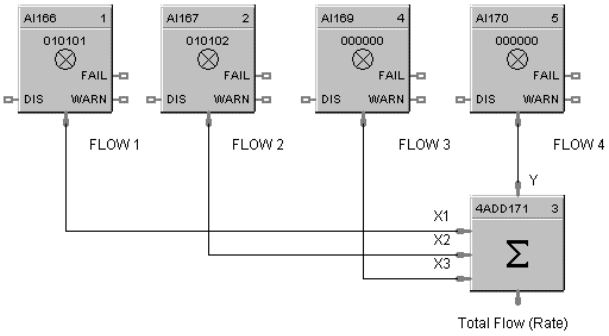

Figure 3 4ADD function block example

AGA8DL Function Block

Description

The AGA8DL label stands for Gas Compressibility Detail AGA8 Calculation.

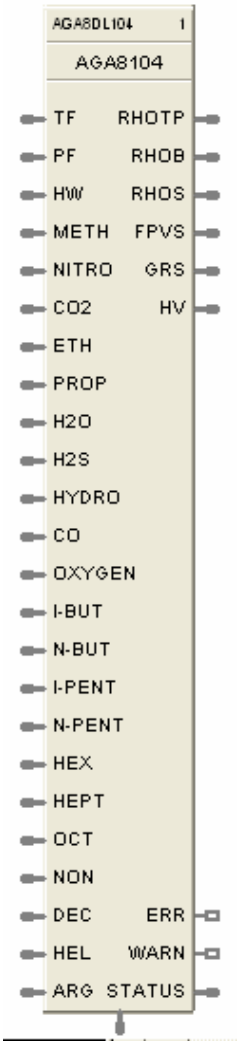

METER BLOCK CONNECT

This block is part of the *Calculations* category.

Function

The Detail method (AGA8DL) uses the gas analysis of up to 21 components. From the gas analysis, the super-compressibility factor, gas density at flowing and standard conditions, and gas relative density at standard conditions are calculated for input into the AGA calculation for the meter type chosen.

Used when accurate gas analysis is available either via an on-line gas analyzer or from laboratory measurements. The Detail method can handle up to 21 gas components typically found in natural gas. If this information is available, the Detail method is preferable, as accurate results are obtainable over a wider range of conditions than the Gross method.

Inputs

TF = Temperature at flow in units selected by the UNITS configuration parameter.
PF = Pressure at flow in units selected by the UNITS configuration parameter.
HW = Differential pressure in the units selected by the UNITS configuration parameter.
(Only required if the meter block is AGA3.)
METH = Methane Mole Fraction
NITRO = Nitrogen Mole Fraction
CO2 = Carbon Dioxide Mole Fraction
ETH = Ethane Mole Fraction
PROP = Propane Mole Fraction
H2O = Water Mole Fraction
H2S = Hydrogen Sulfide Mole Fraction
HYDRO = Hydrogen Mole Fraction
CO = Carbon Monoxide Mole Fraction
OXYGEN = Oxygen Mole Fraction
I-BUT = i-Butune Mole Fraction
N-BUT = n-Butane Mole Fraction
I-PENT = i-Pentane Mole Fraction
N-PENT = n-Pentane Mole Fraction
HEX = Hexane Mole Fraction
HEPT = Heptane Mole Fraction
OCT = Octane Mole Fraction
NON = Nonane Mole Fraction
DEC = Decane Mole Fraction
HEL = Helium Mole Fraction
ARG = Argon Mole Fraction

Outputs

RHOTP = Density at flow temperature and pressure conditions in units selected by the UNITS configuration parameter.
RHOB = Density at base conditions in units selected by the UNITS configuration parameter.
RHOS = Density at standard conditions in units selected by the UNITS configuration parameter.
FPVS = Super-compressibility factor
GRS = Real Gas relative density at 60 deg F/14.73 PSI
GRS = $(M_{gas}*Z_{air})/(M_{air}*Z_{gas})$
where Z_{air} = .9995844 and M_{air} = 28.96256
HV = Heating Value in units selected by the UNITS configuration parameter.
ERR = Set when calculation status is indicating an error condition.
WARN = Set when calculation status is indicating a warning condition -
STATUS = a status number is placed on this pin which can be used to find the error in the error/warning lookup table (See Table 5 AGA Error Codes). This enables the user to connect the pin to comparator blocks to distinguish various error/warning conditions in the function block configuration.
METER BLK CONNECT = Must be connected to the companion meter block. This output connection provides multiple data for input to its associated meter function block, (AGA 3, 7, or 9), reducing the need to make multiple connections to complete the configuration.

Execution Order of this block must be set to be less than meter block (AGA3, 7, or 9) Execution Order for correct calculation sequence.

Configuration parameters

The AGA8DL properties dialog box is divided into two-tab cards

GENERAL
AGA8 - Detail

Click on the tab to access the properties for that tab.

GENERAL tab

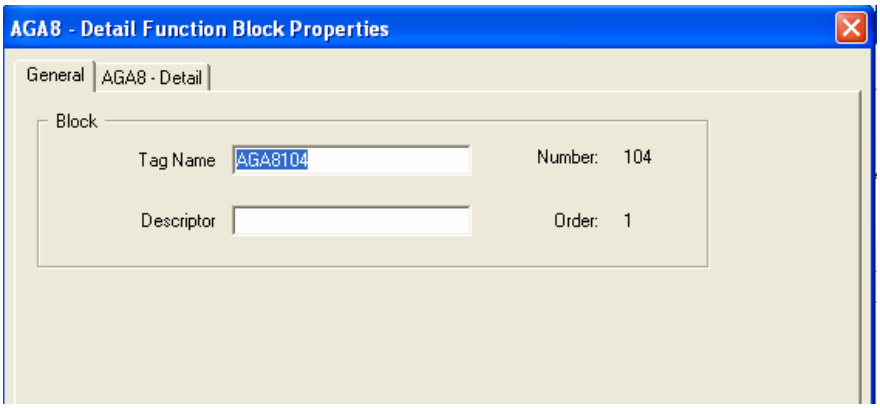

Table 3 AGA8DL General tab configuration parameters

Properties Group	Parameter	Index #	Parameter Description	Value or Selection
Block	**Block Order**		Execution Order for Block Execution Order of this block must be set to be less than meter block (AGA3, 7, or 9) Execution Order for correct calculation sequence.	Read Only. To change block order, right-click on a Function Block and select Execution Order.
	Tag Name	N/A	32-characters unique tag name (ASCII characters only)	Up to 32-characters
	Descriptor	N/A	Block description	Up to 32-characters

AGA8 - Detail tab

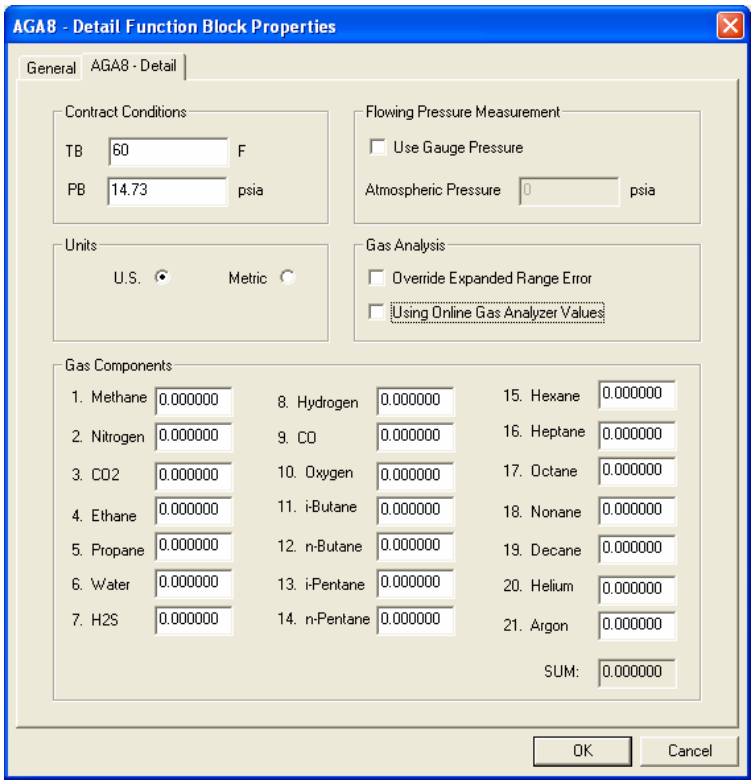

Table 4 AGA8DL Detail tab configuration parameters

Properties Group	Parameter	Index #	Parameter Description	Value or Selection
Contract Conditions	**TB**		Defines the **Base or Contract Temperature** to calculate volume flow rate at contract conditions in the units selected by the UNITS configuration parameter.	ºF for U.S Units ºC for Metric Units
	PB		Defines the **Base or Contract Pressure** to calculate volume flow rate at contract conditions in the units selected by the UNITS configuration parameter.	psia for U.S Units bar for Metric Units
Units	**U.S** **Metric**		Type of units for all block inputs, outputs, and configuration parameters: This selection must agree with the UNITS selection in the meter block. If they don't agree, no error will be indicated on the error/calc status pins. The Meter block will detect the error, and will alert the user.	Click Radio Button to select. ***Ensure that units and gauge pressure settings are consistent with the meter block.***

Properties Group	Parameter	Index #	Parameter Description	Value or Selection
Flowing Pressure Measurement	**Use Gauge Pressure**		Sets whether pressure measurements are absolute or gauge pressure. If you are using gauge pressure, a value of atmospheric pressure is required in the pressure units chosen.	Click on Radio Button to select. ***Ensure that units and gauge pressure settings are consistent with the meter block.***
	Atmospheric Pressure			Enter an Atmospheric pressure value in units selected by the UNITS configuration parameter
Gas Analysis	**Override Expanded Range Error**		Under certain situations, the gas component values may exceed the expanded range recommended by the AGA 8 Report. Setting this checkbox will override the expanded range error so that a flow rate will be calculated. It should be noted that calculated flow rates for conditions where the expanded range is exceeded are outside of the recommended uncertainty values for AGA 8 calculations.	Check this box to Override the expanded Range Error
	Use Remote Gas Component Values		If using this setting, the gas component parameter pins X [1..21] are always visible whether or not this is selected. Unused pins can be left floating, since an unconnected pin is always read as 0. Note that the analyzer values must be normalized to ensure the gas component sum is equal to 1.0.	Check this box to use the block's input pin values from an online analyzer. Uncheck this box to use Local Gas Component Values.

Properties Group	Parameter	Index #	Parameter Description	Value or Selection
Local Gas Component Values	**METH** **NITRO** **CO2** **ETH** **PROP** **H2O** **H2S** **HYDRO** **CO** **OXYGEN** **I-BUT** **N-BUT** **I-PENT** **N-PENT** **HEX** **HEPT** **OCT** **NON** **DEC** **HEL** **ARG**		Each of the 21 gas component fractions can be configured with either a constant fraction value derived from a lab report or from an on-line gas chromatograph.	< 1.0 and >= 0.0 The sum of the gas components should equal 1. HCDesigner will show the sum of the gas components to aid the user.
	SUM		Sum of the 21 gas entered (not active) values.	Read Only

Error Codes

The AGA function blocks have a status pin that outputs a number that indicates the status of the block. This pin can be connected to comparator blocks to distinguish various error/warning conditions in the function block configuration.

Table 5 AGA Error Codes

Status number	Block type	Severity	Description
0	ALL	Good	OK – NO ERRORS OR WARNINGS ENCOUNTERED
1	AGA 8 - DETAIL	Error	PRESSURE HAS A NEGATIVE DERIVATIVE
2	AGA 8 - DETAIL	Warning	DENSITY IN BRAKET EXCEEDS MAXIMUM DEFAULT PROCEDURE USED
3	AGA 8 - DETAIL	Error	MAXIMUM ITERATIONS EXCEEDED IN BRAKET
4	AGA 8 - DETAIL	Error	MAXIMUM ITERATIONS IN DDETAIL EXCEEDED
5	AGA 8 - GROSS	Error	THE ROOT WAS NOT BOUNDED IN DGROSS
6	AGA 8 - GROSS	Error	NO CONVERGENCE IN DGROSS
7	AGA 8 - GROSS	Error	VIRGS SQUARE ROOT NEGATIVE
8	AGA 8 - GROSS	Error	COMBINED VALUES OF GRGR, X[2] AND HV NOT CONSISTENT
9	AGA 8 - GROSS	Error	INVALID TERM IN VIRGS
12	AGA 8 - GROSS	Error	FLOWING PRESSURE (PF) <= 0.0 PR > 1740.0 PSIA
13	AGA 8 - GROSS	Error	FLOWING TEMPERATURE (TF) < 14.0 OR > 149.0 DEG F
14	AGA 8 - GROSS	Error	HEATING VALUE (HV) < 477.0 OR > 1211.0 BTU/FT^3

Status number	Block type	Severity	Description
15	AGA 8 - GROSS	Error	GAS RELATIVE DENSITY (GRGR) < 0.55 OR > 0.870
16	AGA 8 - GROSS	Error	MOLE FRACTION FOR N2 < 0.0 OR > 0.50
			OR FOR CO2 < 0.0 OR > 0.30
			OR FOR H2 < 0.0 OR > 0.10
			OR FOR CO < 0.0 OR > 0.03
17	AGA 8 - GROSS	Error	REFERENCE TEMPERATURE < 32.0 OR > 77.O DEG F
18	AGA 8 - GROSS	Error	REFERENCE PRESSURE < 13.0 OR > 16.0 PSIA
22	AGA 8 - GROSS	Warning	FLOWING PRESSURE (PF) <=0.0 OR > 1200.0 PSIA
23	AGA 8 - GROSS	Warning	FLOWING TEMPERATURE (TF) < 32.0 OR > 130.0 DEG F
24	AGA 8 - GROSS	Warning	HEATING VALUE (HV) < 805.0 OR > 1208.0 BTU/FT^3
25	AGA 8 - GROSS	Warning	GAS RELATIVE DENSITY (GRGR) < 0.55 OR > 0.800
26	AGA 8 - GROSS	Warning	MOLE FRACTION FOR N2 < 0.0 OR > 0.20
			OR FOR CO2 < 0.0 OR > 0.20
			OR FOR H2 < 0.0 OR > 0.0
			OR FOR CO < 0.0 OR > 0.0
32	AGA 8 - DETAIL	Error	FLOWING PRESSURE (PF) < 0.0 OR > 40,000. PSIA
33	AGA 8 - DETAIL	Error	FLOWING TEMPERATURE (TF) < -200 OR > 760 DEG F
36	AGA 8 - DETAIL	Error	MOLE FRACTION FOR METHANE < 0.0 OR > 1.0
			FOR NITROGEN < 0.0 OR > 1.0
			FOR CARBON DIOXIDE < 0.0 OR > 1.0
			FOR ETHANE < 0.0 OR > 1.0
			FOR PROPANE < 0.0 OR > 0.12
			FOR WATER < 0.0 OR > 0.10
			FOR H2S < 0.0 OR > 1.0
			FOR HYDROGEN < 0.0 OR > 1.0
			FOR CARBON MONOXIDE < 0.0 OR > 0.03
			FOR OXYGEN < 0.0 OR > 0.21
			FOR BUTANES < 0.0 OR > 0.06
			FOR PENTANES < 0.0 OR > 0.04
			FOR HEXANES + < 0.0 OR > 0.10
			FOR HELIUM < 0.0 OR > 0.03
			FOR ARGON < 0.0 OR > 1.0
37	AGA 8 - DETAIL	Error	REFERENCE TEMPERATURE < 32.0 OR > 77.0 DEG F
38	AGA 8 - DETAIL	Error	REFERENCE PRESSURE < 13.0 OR > 16.0 PSIA
39	AGA 8 - DETAIL	Error	SUM OF MOLE FRACTIONS < 0.98 OR > 1.020
42	AGA 8 - DETAIL	Warning	FLOWING PRESSURE (PF) < 0.0 OR > 1750. PSIA
43	AGA 8 - DETAIL	Warning	FLOWING TEMPERATURE (TF) < 17 OR > 143 DEG F
46	AGA 8 - DETAIL	Warning	MOLE FRACTION FOR METHANE < 0.45 OR > 1.0

Status number	Block type	Severity	Description
			FOR NITROGEN < 0.0 OR > 0.5
			FOR CARBON DIOXIDE < 0.0 OR > 0.3
			FOR ETHANE < 0.0 OR > 0.1
			FOR PROPANE < 0.0 OR > 0.04
			FOR WATER < 0.0 OR > 0.0005
			FOR H2S < 0.0 OR > 0.0002
			FOR HYDROGEN < 0.0 OR > 0.1
			FOR CARBON MONOXIDE < 0.0 OR > 0.03
			FOR OXYGEN < 0.0 OR > 0.0
			FOR BUTANES < 0.0 OR > 0.01
			FOR PENTANES < 0.0 OR > 0.003
			FOR HEXANES + < 0.0 OR > 0.002
			FOR HELIUM < 0.0 OR > 0.002
			FOR ARGON < 0.0 OR > 0.0
49	AGA 8 - DETAIL	Warning	SUM OF MOLE FRACTIONS < 0.9999 OR > 1.0001
52	AGA 3 - ORIFICE	Error	FLOWING PRESSURE WAS <= 0.0 OR > 40000. PSIA
53	AGA 3 - ORIFICE	Error	FLOWING TEMPERATURE < -200. OR > 760. DEG F
55	AGA 3 - ORIFICE	Error	ORIFICE DIAMETER WAS >= 100.0 INCHES
56	AGA 3 - ORIFICE	Error	PIPE DIAMETER WAS >= 100.0 INCHES
57	AGA 3 - ORIFICE	Error	FLOWING OR STANDARD DENSITY WAS <= 0.0 LBM/FT^3
58	AGA 3 - ORIFICE	Error	DIFFERENTIAL PRESSURE WAS <= 0.0 INCHES H2O
65	AGA 3 – ORIFICE	Error	SUPERCOMPRESSIBILITY FACTOR WAS <= 0.0
66	AGA 3 – ORIFICE	Error	RELATIVE DENSITY AT STANDARD CONDITIONS WAS < 0.07 OR > 1.52
68	AGA 3 – ORIFICE	Error	COMPRESSIBILITY FACTOR AT STANDARD CONDITIONS <= 0.0
69	AGA 3 – ORIFICE	Error	BETA RATIO (DO/DM) <= 0.0 OR => 1.0
75	AGA 3 – ORIFICE	Warning	ORIFICE DIAMETER WAS < = 0.45 INCHES
76	AGA 3 – ORIFICE	Warning	PIPE DIAMETER WAS <= 2.0 INCHES
77	GENERAL CONFIG	Error	ERROR INVALID COMPANION BLOCK INTERCONNECTION
78	GENERAL CONFIG	Error	METER/COMPRESSIBLITY BLOCK UNITS ARE INCONSISTENT
79	AGA 3 - ORIFICE	Warning	BETA RATIO (DO/DM) WAS < 0.1 OR > 0.75
99	GENERAL OPERATION	N/A	Block is disabled – process value outputs are set to 0 and error/warning pins are turned off.

Example

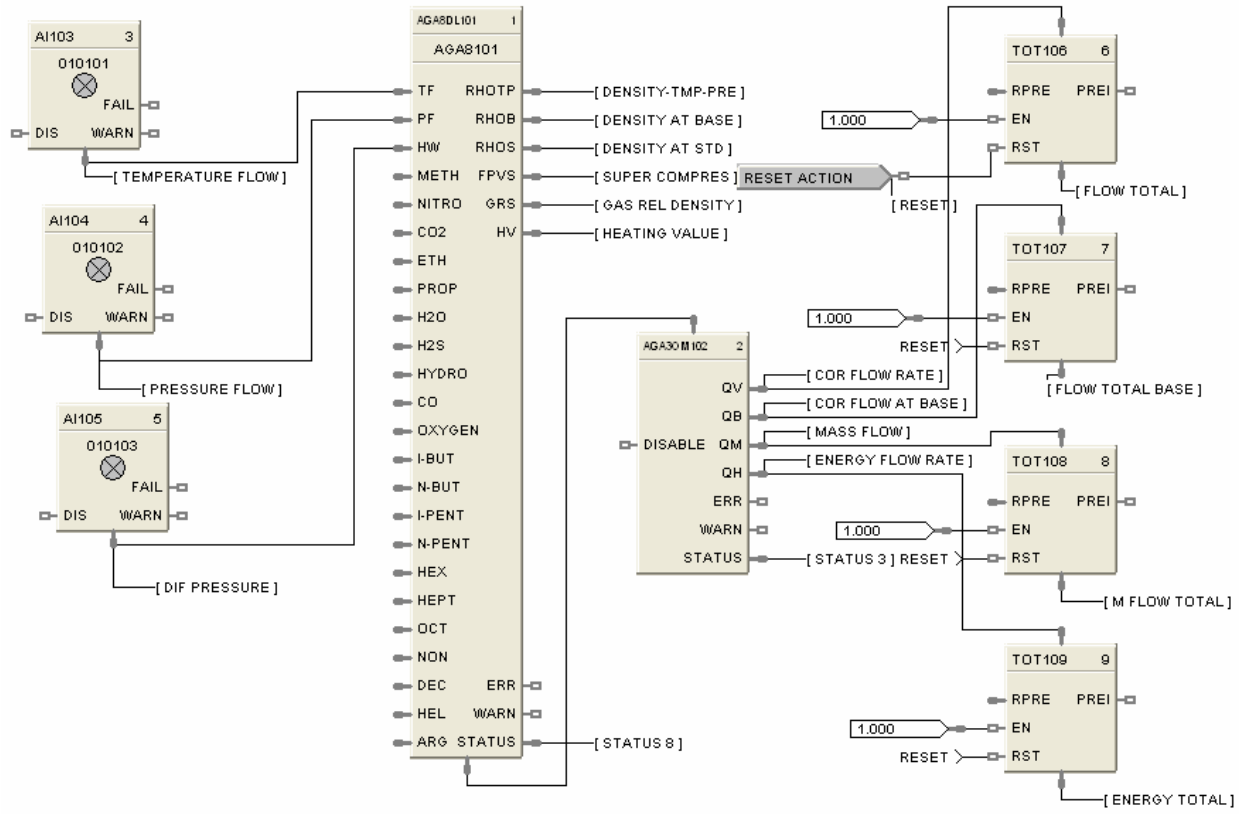

Figure 4 AGA8DL function block example

AGA8GS Function Block

Description

The AGA8GS label stands for Gas Compressibility Gross Method AGA8 Calculation

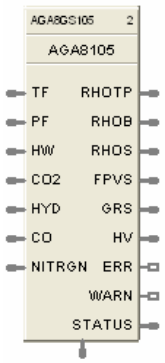

METER BLK
CONNECT

This block is part of the *Calculations* category.

Function

The Gross method is used to approximate natural gas by treating it as a mixture of three components, equivalent hydrocarbon component, Nitrogen and Carbon Dioxide. It is typically used for dry, sweet (no H_2S) natural gas. There are two methods used:

Gross Method 1 calculates the super-compressibility and gas density from knowledge of the relative density, heating value and carbon dioxide, hydrogen and carbon monoxide components.

Gross Method 2 calculates the super-compressibility and gas density from knowledge of the relative density, Nitrogen, carbon dioxide, hydrogen and carbon monoxide components.

The Gross Method only works over a limited range of conditions but requires less instrumentation to implement.

Inputs

TF = Temperature at flow in units selected by the UNITS configuration parameter.
PF = Pressure at flow in units selected by the UNITS configuration parameter.
HW = Differential pressure in the units selected by the UNITS configuration parameter. (Only required if the meter block is AGA3.)
CO2 = Carbon Dioxide Mole Fraction
HYD = Hydrogen Mole Fraction
CO = Carbon Monoxide Mole Fraction
NITRGN = Nitrogen Mole Fraction (Method 2 only)

Outputs

RHOTP = Density at flow temperature and pressure conditions in units selected by the UNITS configuration parameter.
RHOB = Density at base conditions in units selected by the UNITS configuration parameter.
RHOS = Density at standard conditions in units selected by the UNITS configuration parameter.
FPVS = Super-compressibility factor
GRS = Real Gas relative density at 60 deg F/14.73 PSI

$GRS = (M_{gas}*Z_{air})/(M_{air}*Z_{gas})$

where $Z_{air} = .9995844$ and $M_{air} = 28.96256$

HV = Heating Value in units selected by the UNITS configuration parameter.
ERR = Set when calculation status is indicating an error condition. Errors indicate a fatal condition. The output values in this case will be set to 0 and the error pin turned on until configuration is corrected or operating conditions return to normal.
WARN = Set when calculation status is indicating a warning condition - Warnings indicate that the configured or running conditions are outside of the tolerance for the AGA calculations being performed. Values will still be calculated but should be viewed as out of tolerance
STATUS = a status number is placed on this pin which can be used to find the error in the error/warning lookup table. (See Table 5 AGA Error Codes) This enables the user to connect the pin to comparator blocks to distinguish various error/warning conditions in the function block configuration.

METER BLK CONNECT = Must be connected to the companion meter block. This output connection provides multiple data for input to its associated meter function block, (AGA 3, 7, or 9), reducing the need to make multiple connections to complete the configuration.

Execution Order of this block must be set to be less than meter block (AGA3, 7, or 9) Execution Order for correct calculation sequence.

Configuration parameters

The AGA8GS properties dialog box is divided into two-tab cards

GENERAL
AGA8 - Gross

Click on the tab to access the properties for that tab.

GENERAL tab

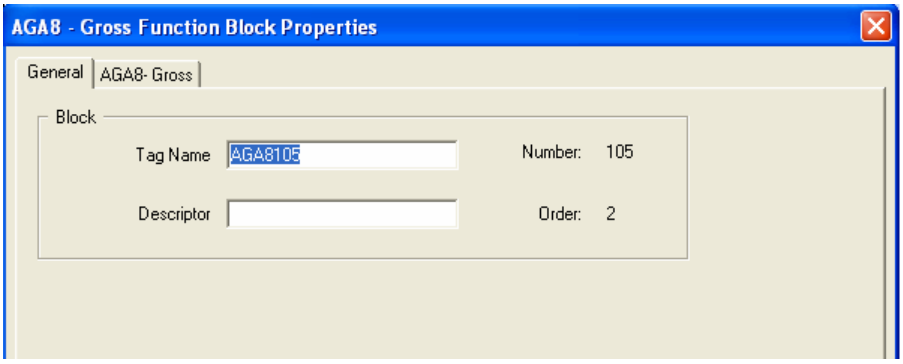

Table 6 AGA8GS General tab configuration parameters

Properties Group	Parameter	Index #	Parameter Description	Value or Selection
Block	**Block Order**		Execution Order for Block Execution Order of this block must be set to be less than meter block (AGA3, 7, or 9) Execution Order for correct calculation sequence.	Read Only. To change block order, right-click on a Function Block and select Execution Order.
	Tag Name	N/A	32-characters unique tag name (ASCII characters only)	Up to 32-characters
	Descriptor	N/A	Block description	Up to 32-characters

AGA8 – Gross tab

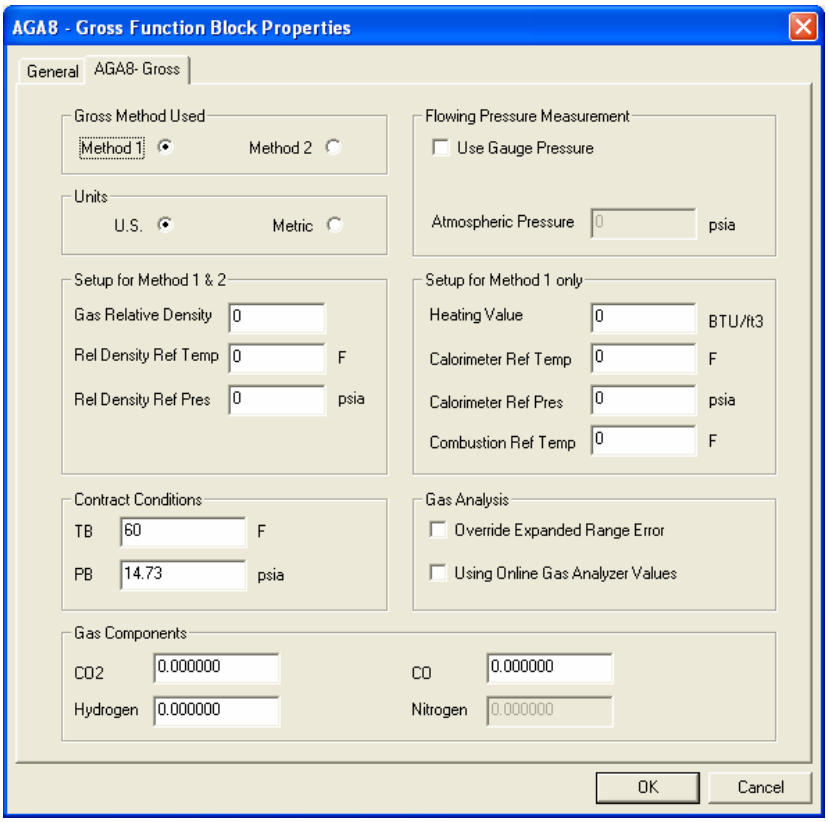

Table 7 AGA8GS Detail tab configuration parameters

Properties Group	Parameter	Index #	Parameter Description	Value or Selection
Gross Method Used	**Method 1**		**Gross Method 1** calculates the super-compressibility and gas density from knowledge of the relative density, heating value and carbon dioxide, hydrogen and carbon monoxide components.	Click on Radio Button to select
	Method 2		**Gross Method 2** calculates the super-compressibility and gas density from knowledge of the relative density, Nitrogen, carbon dioxide, hydrogen and carbon monoxide components.	Click on Radio Button to select
Contract Conditions	**TB**		Defines the **Base or Contract Temperature** to calculate volume flow rate at contract conditions in the units selected by the UNITS configuration parameter.	ºF for U.S Units ºC for Metric Units
	PB		Defines the **Base or Contract Pressure** to calculate volume flow rate at contract conditions in the units selected by the UNITS configuration parameter.	psia for U.S Units bar for Metric Units

Properties Group	Parameter	Index #	Parameter Description	Value or Selection
Flowing Pressure Measurement	**Use Gauge Pressure**		Sets whether pressure measurements are absolute or gauge pressure. If you are using gauge pressure, a value of atmospheric pressure is required in the pressure units chosen.	Click on Radio Button to select. ***Ensure that units and gauge pressure settings are consistent with the meter block.***
	Atmospheric Pressure			Enter an Atmospheric pressure value in units selected by the UNITS configuration parameter
Gas Analysis	**Override Expanded Range Error**		Under certain situations, the gas component values may exceed the expanded range recommended by the AGA 8 Report. Setting this checkbox will override the expanded range error so that a flow rate will be calculated. It should be noted that calculated flow rates for conditions where the expanded range is exceeded are outside of the recommended uncertainty values for AGA 8 calculations.	Check this box to Override the expanded Range Error. Expanded Range Override only required if entered gas values cause expanded range errors.
	Local/Remote Gas Component Values		If using this setting, the gas component parameter pins are always visible whether or not this is selected. Unused pins can be left floating, since an unconnected pin is always read as 0. Note that the analyzer values must be normalized to ensure the gas component sum is equal to 1.0.	Check this box if using an online analyzer.
Units	**U.S** **Metric**		Type of units for all block inputs, outputs, and configuration parameters: This selection must agree with the UNITS selection in the meter block. If they don't agree, no error will be indicated on the error/calc status pins. The Meter block will detect the error, and will alert the user.	Click Radio Button to select. ***Ensure that units and gauge pressure settings are consistent with the meter block.***
Setup for Method 1 & 2	**Gas Relative Density**		Gas Relative Density	Enter a positive number >0
	Rel Density Ref Temp		Relative density reference temperature in units selected by the UNITS configuration parameter.	Enter a positive number >0
	Rel Density Ref Pres		Relative density reference pressure in units selected by the UNITS configuration parameter.	Enter a positive number >0

Properties Group	Parameter	Index #	Parameter Description	Value or Selection
Setup for Method 1 only	**Heating Value**		Heating value in units selected by the UNITS configuration parameter.	Enter a value from -99999 to 99999
	Calorimeter Ref Temp		Calorimeter reference temperature in units selected by the UNITS configuration parameter.	Enter a value from -99999 to 99999
	Calorimeter Ref Pres		Calorimeter reference pressure in units selected by the UNITS configuration parameter.	Enter a value from -99999 to 99999
	Combustion Ref Temp		Combustion reference temperature in units selected by the UNITS configuration parameter.	Enter a value from -99999 to 99999
Gas Components	**CO2** **HYDROGEN** **CONITROGEN**		Each of the 4 gas component fractions can be configured with either a constant fraction value derived from a lab report or from an on-line gas chromatograph.	< 1.0 and >= 0.0 The sum of the gas components should equal 1.

Example

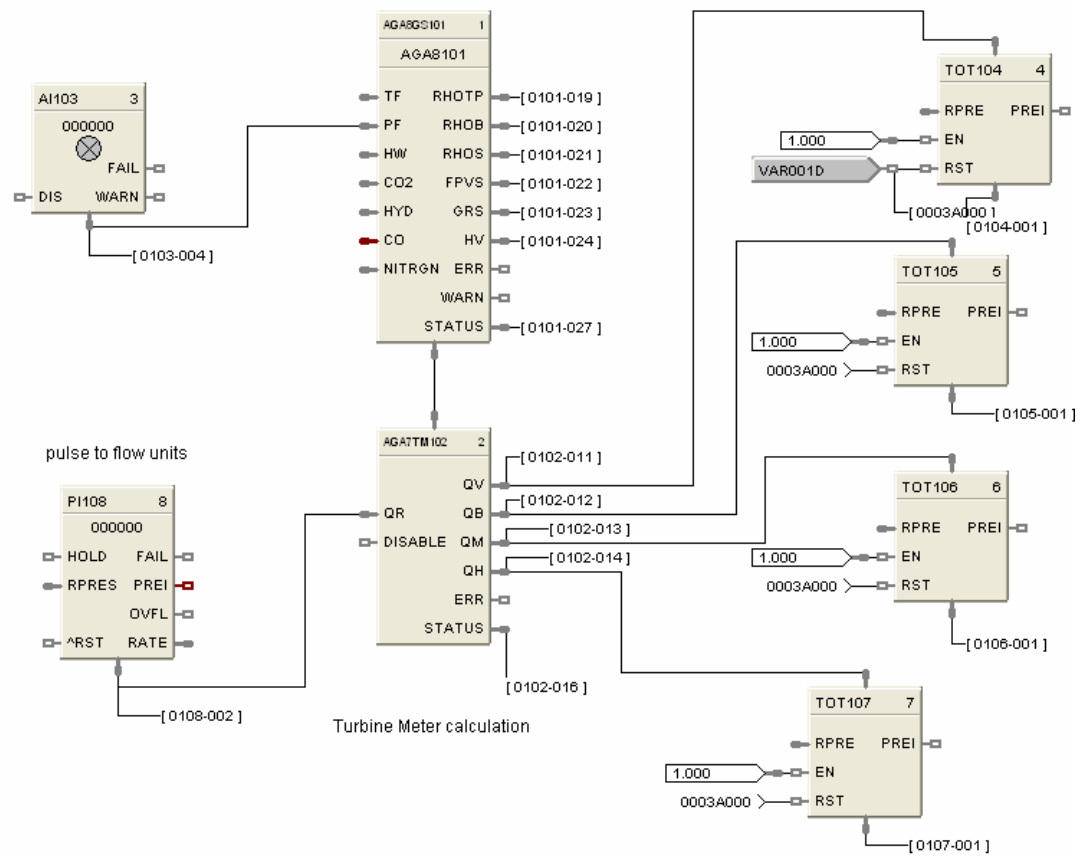

Figure 5 **AGA8GS function block example**

AGA3O Function Block

Description

The AGA3O label stands for Orifice AGA3 Meter Calculation.

AGA8 BLK
CONNECT

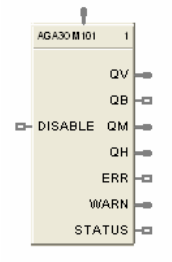

This block is part of the *Calculations* category.

Function

Calculations for Orifice Metering - When connected to an AGA8 block, the input value and multiple related parameters will be obtained from the AGA8 block. The meter block will use this information to inherit the AGA8 block data for use in the calculations.

Inputs

AGA8 BLK CONNECT = When connected to an AGA8 block, the input value will equal the block number of the AGA8 block. The meter block will use this information to inherit the AGA8 block data for use in the calculations. If the input pin is not connected to an AGA8 block, then ERR and STATUS output pins are updated accordingly.

DISABLE = When this pin is ON, the block is disabled, the process value outputs are set to 0, the ERR/WARN pins are OFF, and the STATUS pin is set to 99 (See Table 5 AGA Error Codes).

Output

QV = Corrected volume flow rate at flowing conditions (Tf, Pf) in the units selected by the UNITS configuration parameter. Output units are ft3/hr for U.S.; m3/hr for metric.
QB = Corrected volume flow rate at Base (or Contract) pressure and temperature in the units selected by the UNITS configuration parameter. The base or contract conditions are specified by TB and PB in the companion compressibility block. Output units are ft3/hr for U.S.; m3/hr for metric.
QM = Mass flow rate in the units selected by the UNITS configuration parameter. Units are lbm/hr for U.S. and kg/hr for metric.
QH = Energy flow rate in the units selected by the UNITS" Units are MBTU/hr for U.S. and MJ/hr for metric
ERR = Set when calculation status is indicating an error condition. Errors indicate a fatal condition. The output values in this case will be set to 0 and the error pin turned on until configuration is corrected or operating conditions return to normal.
WARN = Set when calculation status is indicating a warning condition - Warnings indicate that the configured or running conditions are outside of the tolerance for the AGA calculations being performed. Values will still be calculated but should be viewed as out of tolerance.
STATUS = a status number is placed on this pin which can be used to find the error in the error/warning lookup table.(See Table 5 AGA Error Codes) This enables the user to connect the pin to comparator blocks to distinguish various error/warning conditions in the function block configuration.

Execution Order of this block must be set to be greater than the Gas Compressibility block (AGA8GS, or AGA8DL) Execution Order for correct calculation sequence. Right click on block to change execution order.

Configuration parameters

The AGA3O properties dialog box is divided into two-tab cards

AGA3-Orifice
Flow Rates

Click on the tab to access the properties for that tab.

AGA3-Orifice tab

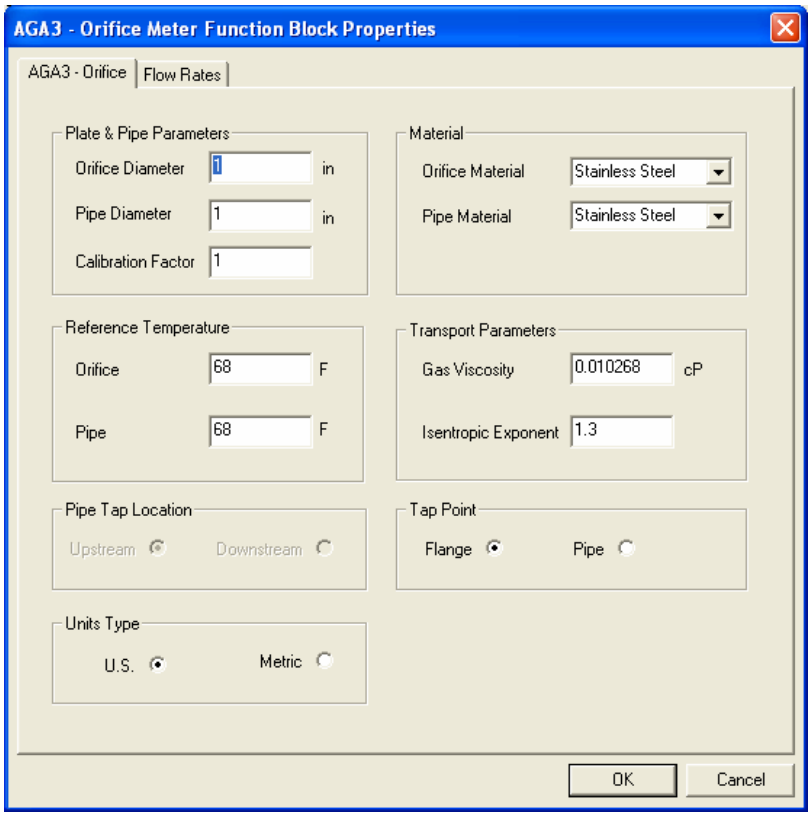

Table 8 AGA3O Orifice tab configuration parameters

Properties Group	Parameter	Index #	Parameter Description	Value or Selection
Plate and Pipe Parameters	**Orifice Diameter**		Orifice diameter in the units selected by the UNITS configuration parameter.	Enter a value >0 Default = 1.0. U.S = in Metric = mm
	Pipe Diameter		Pipe diameter in the units selected by the UNITS configuration parameter.	Enter a value >0 Default = 1.0. U.S = in Metric = mm
	Calibration Factor		Combined calibration factor of Orifice meter. If not specified use a value of 1.0. {> 0.0}	Enter a value Default = 1.0

Properties Group	Parameter	Index #	Parameter Description	Value or Selection
Material	**Orifice Material**		Orifice material (Mandatory); Stainless Steel, Monel, Carbon Steel	Select from Drop Down menu
	Pipe Material		Pipe material (Mandatory); Stainless Steel, Monel, Carbon Steel	Select from Drop Down menu
Reference Temperature	**Orifice**		Temperature at which the Orifice diameter was measured. If this is not specified, use a typical ambient temperature of 68°F (20°C).	Enter a value Default = 68°F
	Pipe		Temperature at which the Pipe diameter was measured. If this is not specified, use a typical ambient temperature of 68°F (20°C).	Enter a value Default = 68°F
Transport Parameters	**Gas Viscosity**		Gas Viscosity – Absolute viscosity of flowing fluid. In the absence of this information, use the recommended default of 0.010268 cP (Refer to AGA 3 Report- Part 4)	Enter a value Range 0.005 to 0.5 Default = 0.010268
	Isentropic Exponent		Isentropic Exponent - In the absence of this information, use the recommended default of 1.3 (Refer to AGA 3 Report- Part 4)	Enter a value Range 1.0 to 2.0 Default = 1.3
Pipe Tap Location	**Upstream** **Downstream**		Indicates the position of the Orifice meter's pipe pressure tap. ***Note: -*** If downstream tap is chosen, the differential pressure (HW) must be fed to the AGA8 block for correct results.	Select a location of either upstream, or downstream Click Radio Button to select
Tap Point	**Flange** **Pipe**		Flowing pressure tap point	Click Radio Button to select
Units Type	**U.S** **Metric**		Type of units for all block inputs, outputs, and configuration parameters: This selection must agree with the UNITS selection in the compressibility block. If the units do not agree, the error and status output pins will indicate the error and the calculated outputs will be set to 0.0	Click Radio Button to select

Flow Rates tab

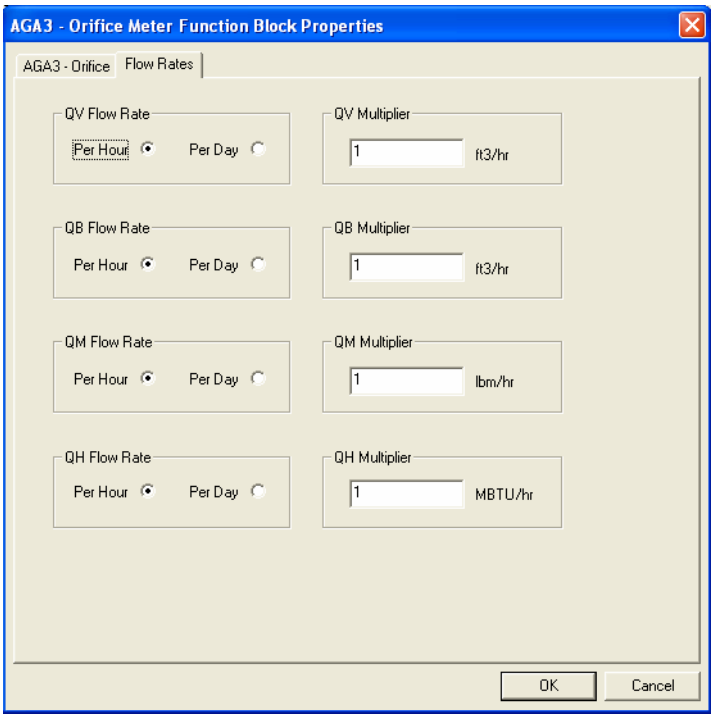

Table 9 AGA3O Flow Rates tab configuration parameters

Properties Group	Parameter	Index #	Parameter Description	Value or Selection
QV Flow Rate	**Per Hour** **Per Day**		Defines the rate of time for **QV** output flow.	Click Radio Button to select.
QV Multiplier	**Units Type (see "UNITS" on Orifice tab) =** **US** / **Metric** **FT3/hr** / **M3/ hr** **Ft3/day** / **M3/day**		Provides a time period other than "per hour" or "per day".	Enter Value For example, if "per minute" is desired, set the unit to "per hour" and the multiplier to 1/60. Default = 1.0.
QB Flow Rate	**Per Hour** **Per Day**		Defines the rate of time for **QB** output flow.	Click Radio Button to select.
QB Multiplier	**Units Type (see "UNITS" on Orifice tab) =** **US** / **Metric** **FT3/hr** / **M3/ hr** **Ft3/day** / **M3/day**		Provides a time period other than "per hour" or "per day".	Enter Value For example, if "per minute" is desired, set the unit to "per hour" and the multiplier to 1/60. Default = 1.0.
QM Flow Rate	**Per Hour** **Per Day**		Defines the rate of time for **Qm** output flow.	Click Radio Button to select.

Properties Group	Parameter	Index #	Parameter Description	Value or Selection
QM Multiplier	**Units Type (see "UNITS" on Orifice tab) =** **US** / **Metric** **lbm/hr** / **Kg/hr** **lbm/day** / **Kg/day**		Provides a time period other than "per hour" or "per day".	Enter Value For example, if "per minute" is desired, set the unit to "per hour" and the multiplier to 1/60. Default = 1.0.
QH Flow Rate	**Per Hour** **Per Day**		Defines the rate of time for **QH** output flow.	Click Radio Button to select.
QH Multiplier	**Units Type (see "UNITS" on Orifice tab) =** **US** / **Metric** **MBTU/hr** / **MJ/ hr** **MBTU/day** / **MJ/ day**		Provides a time period other than "per hour" or "per day".	Enter Value For example, if "per minute" is desired, set the unit to "per hour" and the multiplier to 1/60. Default = 1.0.

Example

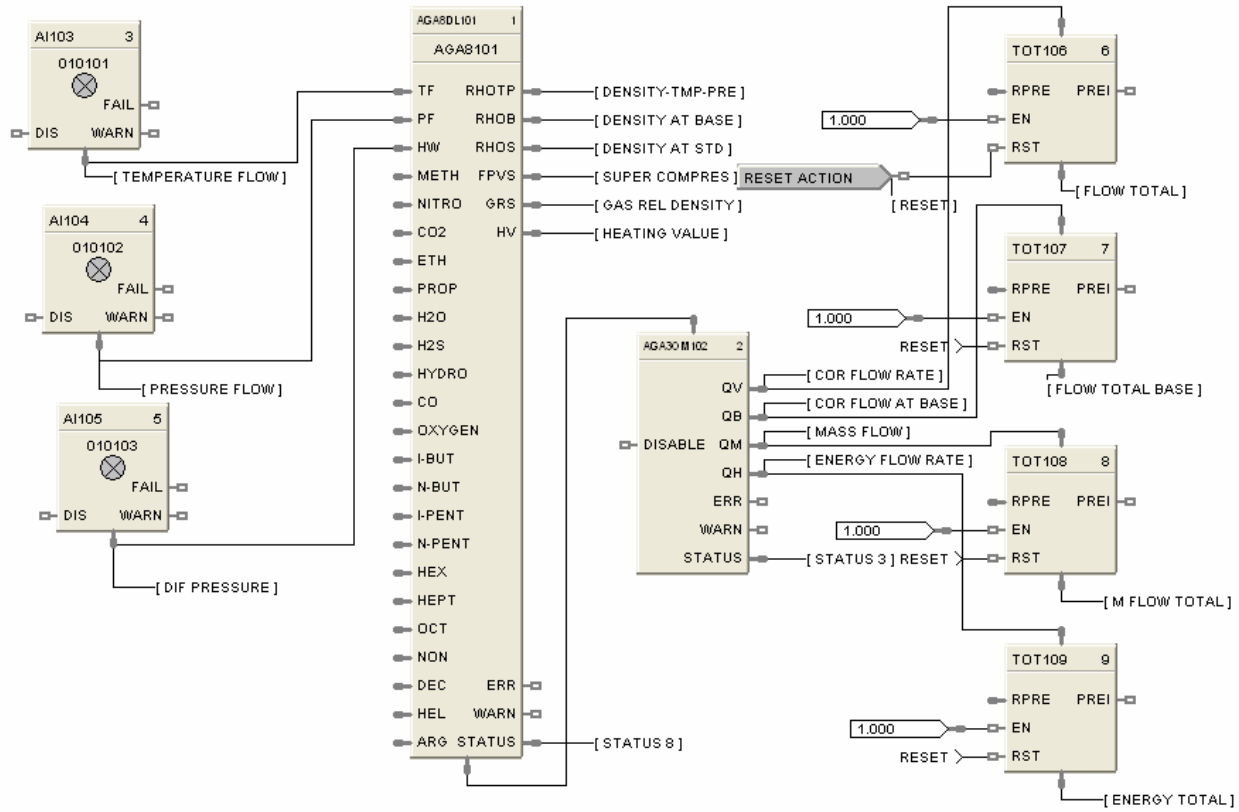

Figure 6 AGA3O function block example

AGA7TM Function Block

Description

The AGA7TM label stands for Turbine AGA7 Meter Calculation and also applies to Rotary, Diaphragm, UltraSonic and Fluidic Oscillation Gas Meters.

AGA8 BLK
CONNECT

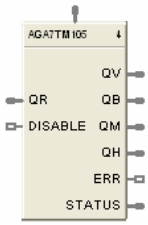

This block is part of the *Calculations* category.

Function

Calculations for gas measurement by Turbine Meters - When connected to an AGA8 block, the input value and multiple related parameters will be obtained from the AGA8 block. The meter block will use this information to inherit the AGA8 block data for use in the calculations.

Inputs

QR = Raw Flow Rate in the units selected by the UNITS configuration parameter.
U.S. is ft3/hr and Metric is m3/hr.

AGA8 BLK CONNECT = When connected to an AGA8 block, the input value will equal the block number of the AGA8 block. The meter block will use this information to inherit the AGA8 block data for use in the calculations. If the input pin is not connected to an AGA8 block, then ERR and STATUS output pins are updated accordingly.

DISABLE = When this pin is ON, the block is disabled, the process value outputs are set to 0, the ERR pin is OFF, and the STATUS pin is set to 99 (See Table 5 AGA Error Codes).

Outputs

QV = Corrected volume flow rate at flowing conditions (Tf,Pf) in the units selected by the UNITS configuration parameter. Output units are "ft3/hr" U.S. and “m3/hr” for metric.
QB = Corrected volume flow rate at Base (or Contract) pressure and temperature in the units selected by the UNITS configuration parameter. Base or Contract conditions are specified by TB and PB in the companion compressibility block. Output units are "ft3/hr" U.S. and “m3/hr” for metric.
QM = Mass flow rate in the units selected by the UNITS configuration parameter." Units are lbm/hr for U.S. and kg/hr for metric.
QH = Energy flow rate in the units selected by the UNITS. Units are MBTU/hr for U.S. and MJ/hr for metric.
ERR = Set when calculation status is indicating an error condition. Errors indicate a fatal condition. The output values in this case will be set to 0 and the error pin turned on until configuration is corrected or operating conditions return to normal.
STATUS = a status number is placed on this pin which can be used to find the error in the error/warning lookup table (See Table 5 AGA Error Codes). This enables the user to connect the pin to comparator blocks to distinguish various error/warning conditions in the function block configuration.

Execution Order of this block must be set to be greater than the Gas Compressibility block (AGA8GS, or AGA8DL) Execution Order for correct calculation sequence. Right click on block to change execution order.

Configuration parameters

The AGA7TM properties dialog box is divided into two tab cards

AGA7-Turbine
Flow Rates

Click on the tab to access the properties for that tab.

AGA7-Turbine tab

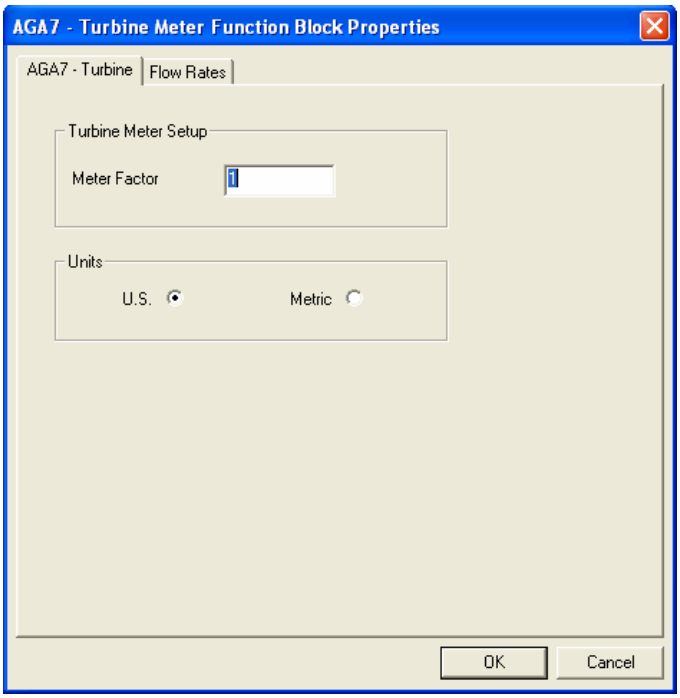

Table 10 AGA7TM Turbine tab configuration parameters

Properties Group	Parameter	Index #	Parameter Description	Value or Selection
Turbine Meter Setup	**Meter Factor**		A meter factor is a dimensionless term obtained by dividing the actual volume of gas passed through the meter by the corresponding meter indicated volume.	Value should default to 1 and be limited to >0.
Units	**U.S.** **Metric**		Type of units for all block inputs, outputs, and configuration parameters: This selection must agree with the UNITS selection in the meter block. If they don't agree, no error will be indicated on the error/calc status pins. The Meter block will detect the error, and will alert the user.	Click Radio Button to select

Flow Rates tab

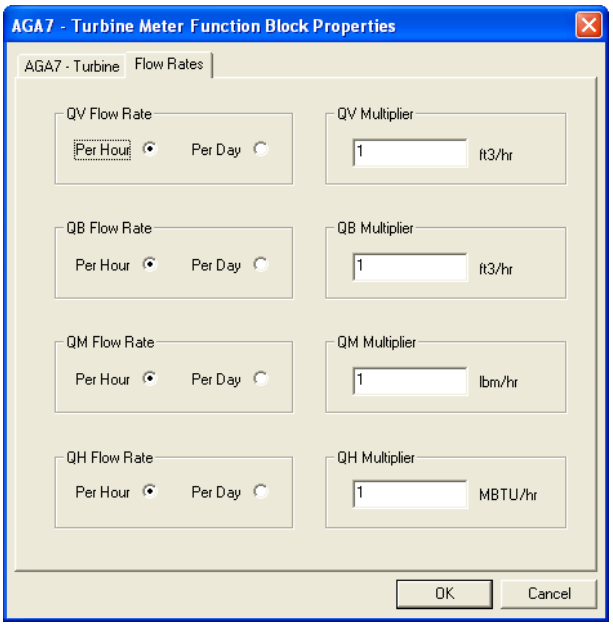

Table 11 AGA7TM Flow Rates tab configuration parameters

Properties Group	Parameter	Index #	Parameter Description	Value or Selection
QV Flow Rate	**Per Hour** **Per Day**		Defines the rate of time for **QV** output flow.	Click Radio Button to select.
QV Multiplier	**Units Type (see "UNITS" on Turbine tab) =** **US** / **Metric** **FT3/hr** / **M3/ hr** **Ft3/day** / **M3/day**		Provides a time period other than "per hour" or "per day".	Enter Value For example, if "per minute" is desired, set the unit to "per hour" and the multiplier to 1/60. Default = 1.0.
QB Flow Rate	**Per Hour** **Per Day**		Defines the rate of time for **QB** output flow.	Click Radio Button to select.
QB Multiplier	**Units Type (see "UNITS" on Turbine tab) =** **US** / **Metric** **FT3/hr** / **M3/ hr** **Ft3/day** / **M3/day**		Provides a time period other than "per hour" or "per day".	Enter Value For example, if "per minute" is desired, set the unit to "per hour" and the multiplier to 1/60. Default = 1.0.
QM Flow Rate	**Per Hour** **Per Day**		Defines the rate of time for **Qm** output flow.	Click Radio Button to select.
QM Multiplier	**Units Type (see "UNITS" on Turbine tab) =** **US** / **Metric** **lbm/hr** / **Kg/hr** **lbm/day** / **Kg/day**		Provides a time period other than "per hour" or "per day".	Enter Value For example, if "per minute" is desired, set the unit to "per hour" and the multiplier to 1/60. Default = 1.0.
QH Flow Rate	**Per Hour** **Per Day**		Defines the rate of time for **QH** output flow.	Click Radio Button to select.

Properties Group	Parameter	Index #	Parameter Description	Value or Selection
QH Multiplier	**Units Type (see "UNITS" on Turbine tab) =** **US** / **Metric** **MBTU/hr** / **MJ/ hr** **MBTU/day** / **MJ/ day**		Provides a time period other than "per hour" or "per day".	Enter Value For example, if "per minute" is desired, set the unit to "per hour" and the multiplier to 1/60. Default = 1.0.

Example

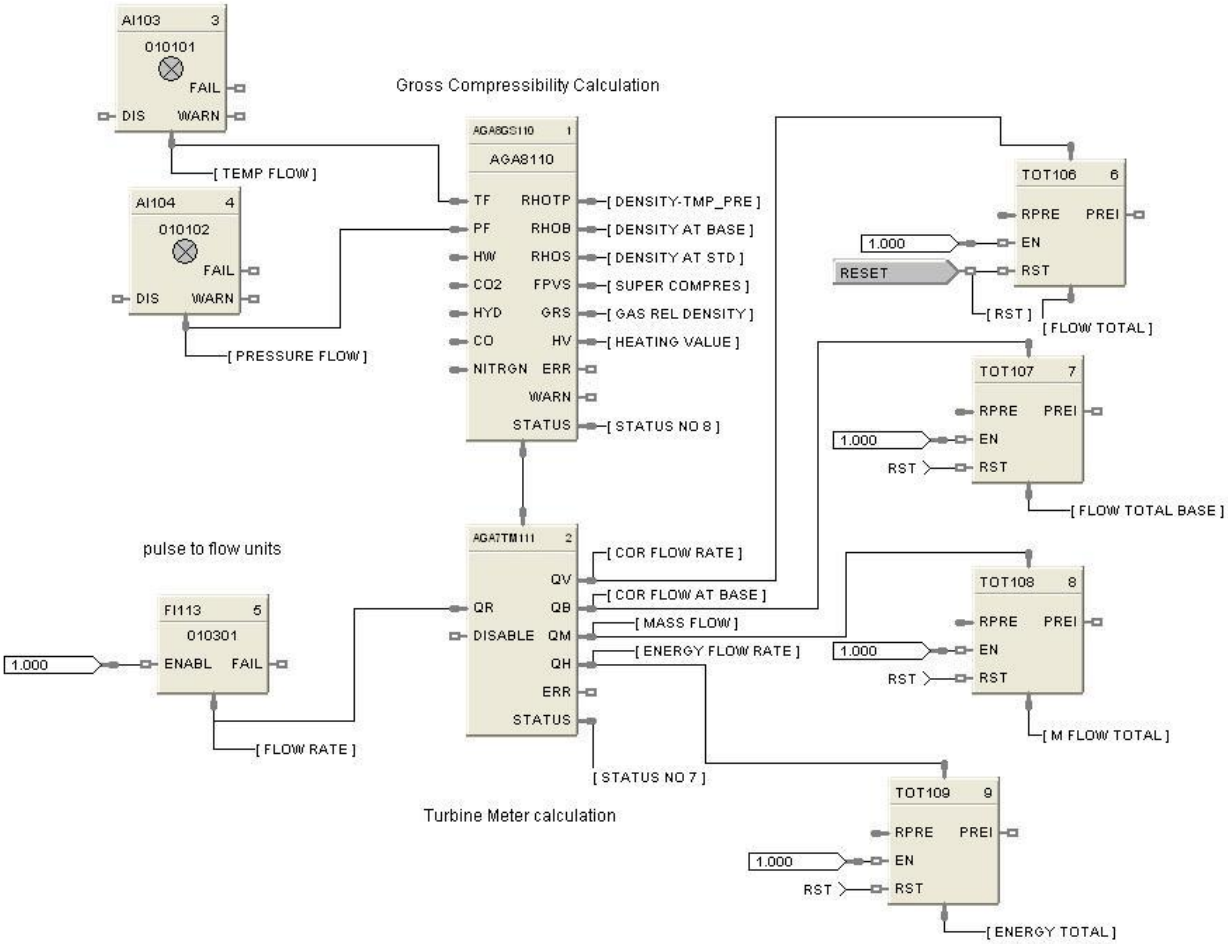

Figure 7 AGA7TM function block example

AGA9UM Function Block

Description

The AGA9UM label stands for Ultrasonic AGA9 Meter Calculation.

AGA8 BLK
CONNECT

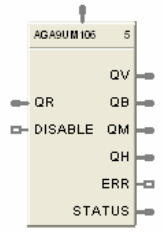

This block is part of the *Calculations* category.

Function

Calculations for gas flow measurements from multi-path Ultrasonic Meters - When connected to an AGA8 block, the input value and multiple related parameters will be obtained from the AGA8 block. The meter block will use this information to inherit the AGA8 block data for use in the calculations.

Inputs

QR = Raw Flow Rate in the units selected by the UNITS configuration parameter. U.S. is ft3/hr and Metric is m3/hr.

AGA8 BLK CONNECT = When connected to an AGA8 block, the input value will equal the block number of the AGA8 block. The meter block will use this information to inherit the AGA8 block data for use in the calculations. If the input pin is not connected to an AGA8 block, then ERR and STATUS output pins are updated accordingly.

DISABLE = When this pin is ON, the block is disabled, the process value outputs are set to 0, the ERR pin is OFF, and the STATUS pin is set to 99 (See Table 5 AGA Error Codes).

Outputs

QV = Corrected volume flow rate at flowing conditions (Tf,Pf) in the units selected by the UNITS configuration parameter. Output units are "ft3/hr" U.S. and “m3/hr” for metric.
QB = Corrected volume flow rate at Base (or Contract) pressure and temperature in the units selected by the UNITS configuration parameter. Base or Contract conditions are specified by TB and PB in the companion compressibility block. Output units are "ft3/hr" U.S. and “m3/hr” for metric.
QM = Mass flow rate in the units selected by the UNITS configuration parameter." Units are lbm/hr for U.S. and kg/hr for metric.
QH = Energy flow rate in the units selected by the UNITS. Units are MBTU/hr for U.S. and MJ/hr for metric.
ERR = Set when calculation status is indicating an error condition. Errors indicate a fatal condition. The output values in this case will be set to 0 and the error pin turned on until configuration is corrected or operating conditions return to normal.
STATUS = a status number is placed on this pin which can be used to find the error in the error/warning lookup table (See Table 5 AGA Error Codes). This enables the user to connect the pin to comparator blocks to distinguish various error/warning conditions in the function block configuration.

Execution Order of this block must be set to be greater than the Gas Compressibility block (AGA8GS, or AGA8DL) Execution Order for correct calculation sequence. Right click on block to change execution order.

Configuration parameters

The AGA9UM properties dialog box is divided into two tab cards

AGA9UM-Ultrasonic
Flow Rates

Click on the tab to access the properties for that tab.

AGA9-Ultrasonic tab

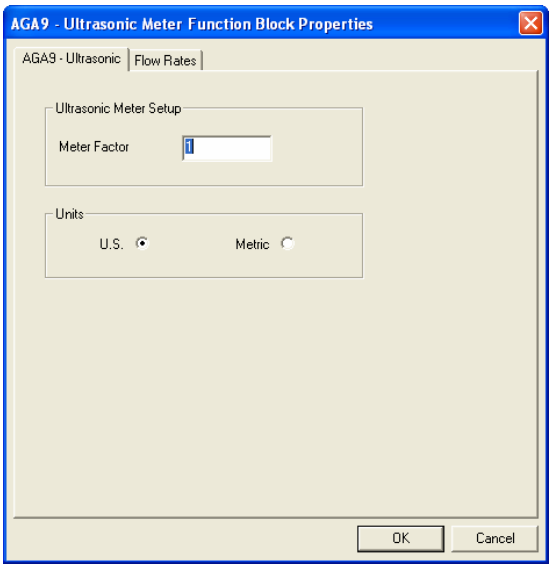

Table 12 AGA9UM Ultrasonic tab configuration parameters

Properties Group	Parameter	Index #	Parameter Description	Value or Selection
Ultrasonic Meter Setup	**Meter Factor**		A meter factor is a dimensionless term obtained by dividing the actual volume of gas passed through the meter by the corresponding meter indicated volume.	Value should default to 1 and be limited to >0.
Units	**U.S.** **Metric**		Type of units for all block inputs, outputs, and configuration parameters: This selection must agree with the UNITS selection in the meter block. If they don't agree, no error will be indicated on the error/calc status pins. The Meter block will detect the error, and will alert the user.	Click Radio Button to select

Flow Rates tab

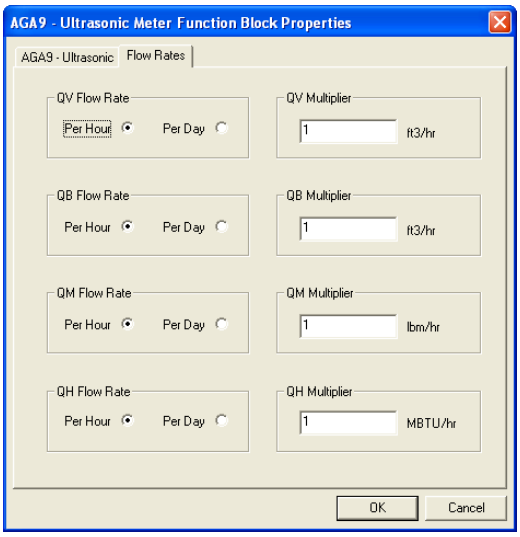

Table 13 AGA9UM Flow Rates tab configuration parameters

Properties Group	Parameter	Index #	Parameter Description	Value or Selection
QV Flow Rate	**Per Hour** **Per Day**		Defines the rate of time for **QV** output flow.	Click Radio Button to select.
QV Multiplier	**Units Type (see "UNITS" on Ultrasonic tab) =** **US / Metric** **FT3/hr / M3/ hr** **Ft3/day / M3/day**		Provides a time period other than "per hour" or "per day".	Enter Value For example, if "per minute" is desired, set the unit to "per hour" and the multiplier to 1/60. Default = 1.0.
QB Flow Rate	**Per Hour** **Per Day**		Defines the rate of time for **QB** output flow.	Click Radio Button to select.
QB Multiplier	**Units Type (see "UNITS" on Ultrasonic tab) =** **US / Metric** **FT3/hr / M3/ hr** **Ft3/day / M3/day**		Provides a time period other than "per hour" or "per day".	Enter Value For example, if "per minute" is desired, set the unit to "per hour" and the multiplier to 1/60. Default = 1.0.
QM Flow Rate	**Per Hour** **Per Day**		Defines the rate of time for **Qm** output flow.	Click Radio Button to select.
QM Multiplier	**Units Type (see "UNITS" on Ultrasonic tab) =** **US / Metric** **lbm/hr / Kg/hr** **lbm/day / Kg/day**		Provides a time period other than "per hour" or "per day"	Enter Value For example, if "per minute" is desired, set the unit to "per hour" and the multiplier to 1/60. Default = 1.0.
QH Flow Rate	**Per Hour** **Per Day**		Defines the rate of time for **QH** output flow.	Click Radio Button to select.

Properties Group	Parameter	Index #	Parameter Description	Value or Selection
QH Multiplier	**Units Type (see "UNITS" on Ultrasonic tab) =** **US** / **Metric** **MBTU/hr** / **MJ/ hr** **MBTU/ day** / **MJ/ day**		Provides a time period other than "per hour" or "per day"	Enter Value. For example, if "per minute" is desired, set the unit to "per hour" and the multiplier to 1/60. Default = 1.0.

Example

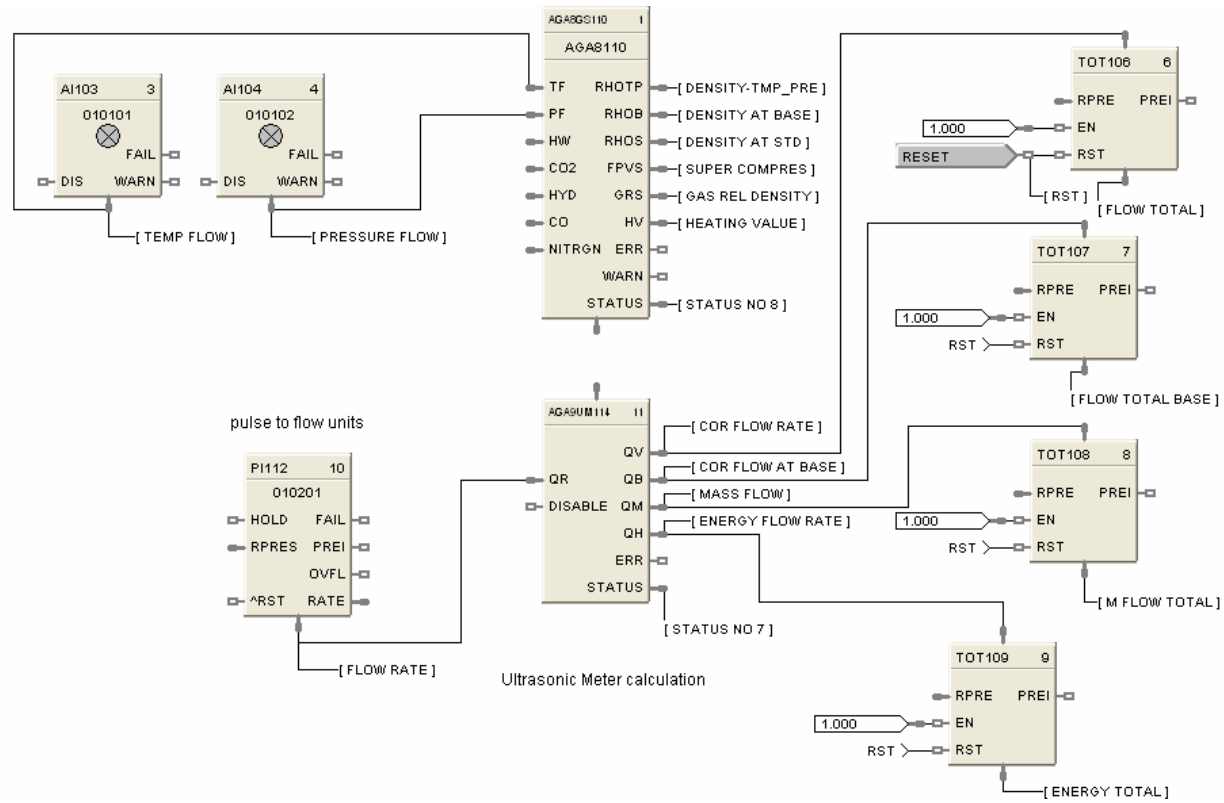

Figure 8 AGA9UM function block example

AI Function Block

Description

The **AI** label stands for **Analog Input**.

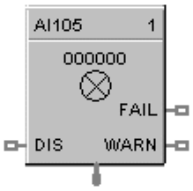

This block is part of the *I/O Blocks* category.

Function

Reads value of an Analog Input from a specified real I/O address. Convert analog input value to corresponding output (OUT) in engineering units based on the necessary scaling and conversions performed.

LINEAR - Converts analog input value to corresponding output in units based on a linear 0 % to 100 % scale and specified high and low range values +/-10% over range.

OUT = Scale x Input value + Bias
where:

$$\text{Scale} = \frac{\text{High range value - Low range value}}{100}$$

Input value = Analog Value in percent

T/C or RTD - Converts analog input value in engineering units using the range of Input Type. +/-1% over range.

ATTENTION

The failsafe detection on this input block configured for 4-20mA range is:

Low Detection: 2.4mA
High Detection: 21.6mA

Outside of the range the flag (Input Fail) is ON. There is no detection from 0 to 4 mA, but the block continues to provide data that can be compared via an Alarm Block, for example.

Input

Analog value from specified real I/O address.
DIS = disable the AI channel

Output

OUT = Analog Input value in engineering units.
WARN = Warning Input Indication - Sensor failure possibility. If AI input wiring or sensor exceeds 100 ohms of resistance, the WARNING pin will energize.
FAIL = Digital status of channel
Digital Low (0) = OK
Digital High (1) = Open sensor or failed input channel.

Configuration parameters

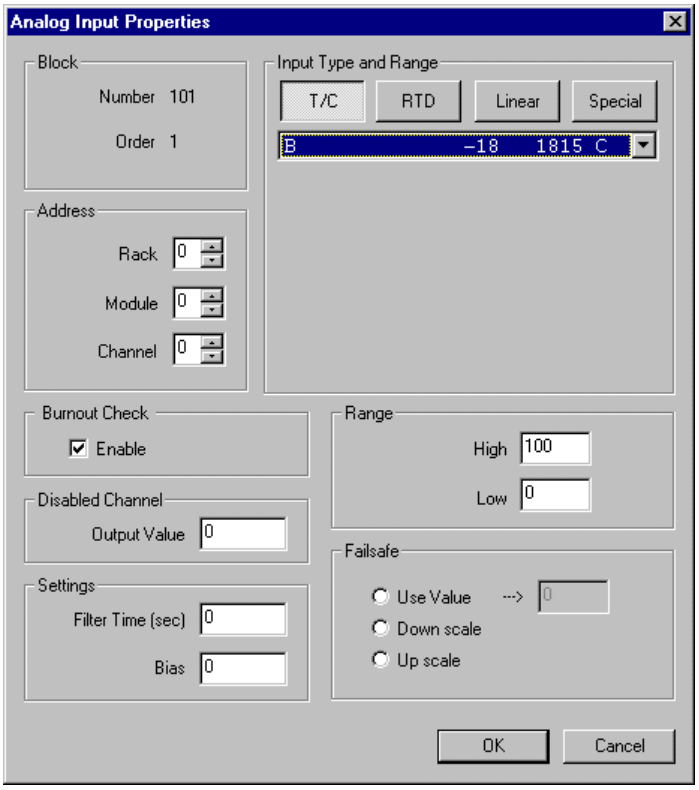

Table 14 Analog Input configuration parameters

Parameter	Index #	Parameter Description	Value or Selection
Block Order	N/A	Execution Order for Block	Read Only. To change block order, right-click on a Function Block and select Execution Order.
Rack Address		This is the address of the selected Rack.	Enter a value from 1 to 12.
I/O Module Address		Address of selected I/O module	Enter a value: from 1 to 12
Channel Address		Channel on selected I/O Module	Enter a value: from 1 to 8 or 16.
Input Type and Range	N/A	Thermocouple Input types RTD Input types Linear Input types Special Input Types - Carbon or Oxygen	Click on the "Input Type and Range" group button and select an input from list box. **See** Table 15 for Input Type and Range

Parameter	Index #	Parameter Description	Value or Selection
High Range Value	6	For Linear Inputs Only - output value that corresponds to 100% input value. For example: Actuation Input = 4-20mA Process variable = Flow Range of Flow = 0 to 250 gal/min High Range Display Value = 250 Low range Display Value = 0 Then 20mA = 250, 4mA = 0	Enter a value: - 99999 to 99999
Low Range Value	7	For Linear Inputs Only - output value that corresponds to 0 % input value For example: See “High Range Value”.	Enter a value: - 99999 to 99999
Disable Channel Output Value	8	The output value when the AI channel is disabled. Disable = ON	Enter a value Default = 0
Filter Time (sec)	2	A software digital filter is provided for the input designated to smooth the input. You can configure the first order lag time constant from 1 to 120 seconds. 0=no filter	Enter a value: 0 to 120 seconds
Bias	3	Bias is used to compensate the input for drift of an input value due to deterioration of a sensor, or some other cause.	Enter a value: -99999 to 99999
Failsafe Use Value	N/A	Use the User value entered in the appropriate field.	Click on Radio button to select
Failsafe Use Value field	4	The output value to which the output will go to protect against the effects of failure of the equipment, such as, fuel shut-off if there is loss of flame in a furnace, or a sensor break.	Enter a value in Engineering Units -99999 to 99999
Downscale	N/A	**LINEAR** OUT = Value set at “Low range value” field. **T/C or RTD** OUT = Value of Low range implied by input type.	Click on Radio button to select
Upscale		**LINEAR** OUT = Value set at “High range value” field. **T/C or RTD** OUT = Value of High range implied by input type.	Click on Radio button to select
Burnout Check	N/A	Burnout check enable (Thermocouples only)	Click on block to select or deselect
Bad Channel Detection	N/A	Check this to generate a hardware failure diagnostic if a bad AI channel is detected. If unchecked, a diagnostic will not be generated, which may be desirable for inputs used for monitoring only.	Click on block to select or deselect

Failsafe rules

If the controller is unable to access the physical channel or the sensor is faulty, and:

- If Failsafe is “Use Value” — Then OUT = Configured Failsafe value
- If Failsafe is enabled and downscale — Then OUT = Range Lo (linear)
  Low Range Value of input type (T/C and RTD)
- If Failsafe is enabled and upscale — Then OUT = Range Hi (linear)
  High Range Value of input type (T/C and RTD)

Table 15 ControlEdge HC900 Input Types and Ranges

Type	Range Low	Range High	EU
B	-18	1815	C
B	0	3300	F
E	-270	1000	C
E	-454	1832	F
E	-129	593	C
E	-200	1100	F
J	-18	871	C
J	0	1600	F
J	-7	410	C
J	20	770	F
J	-180	0	C
J	-292	32	F
K	-18	1316	C
K	0	2400	F
K	-18	982	C
K	0	1800	F
K	-29	538	C
K	20	1000	F
K	0	1200	C
K	32	2192	F
Ni-NiMo	0	1371	C
Ni-NiMo	32	2500	F
Ni-NiMo	0	682	C
Ni-NiMo	32	1260	F
NiMo-NiCo	0	1371	C
NiMo-NiCo	32	2500	F
NiMo-NiCo	0	682	C
NiMo-NiCo	32	1260	F
N	-18	1300	C
N	0	2372	F
N	-18	800	C
N	0	1472	F
N	0	1200	C
N	32	2192	F
R	-18	1704	C
R	0	3100	F
S	-18	1704	C
S	0	3100	F
T	-184	371	C
T	-300	700	F
T	-129	260	C
T	-200	500	F

W_W26	-20	2320	C
W_W26	-4	4200	F
W5W26	-18	2316	C
W5W26	0	4200	F
W5W26	-18	1227	C
W5W26	0	2240	F
Platinel	0	1380	C
Platinel	32	2516	F
Platinel	0	750	C
Platinel	32	1382	F
Pt100	-184	316	C
Pt100	-300	600	F
Pt500	-184	649	C
Pt500	-300	1200	F
Pt1000	-40	260	C
Pt1000	-40	500	F
JIS100	-200	500	C
JIS100	-328	932	F
JIS100	-200	260	C
JIS100	-328	500	F
Cu10	-20	250	C
Cu10	-4	482	F
YSI405	10	37.8	
YSI405	50	100	
Ohms	0	200	
Ohms	0	500	
Ohms	0	1000	
Ohms	0	2000	
Ohms	0	4000	
mA	4	20	
mA	0	20	
mV	0	10	
mV	0	50	
mV	0	100	
mV	-10	10	
mV	-50	50	
mV	-100	100	
mV	-500	500	
V	0	1	
V	0	2	
V	0	5	
V	0	10	
V	1	5	
V	-1	1	
V	-2	2	
V	-5	5	
V	-10	10	
Carbon	0	1250	mV
Oxygen	-30	510	mV

Example

Figure 9 shows a Function Block Diagram configuration using an AI function block.

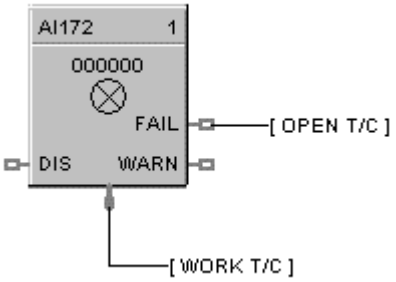

Figure 9 AI function block example

AI used for work temperature monitoring. Tag descriptors are used to identify the input. A digital tag connected to the fail output can alarm on an open sensor.

Analog Input Voting

Description

The **AI-V** label stands for **Analog Input Voting** . This block is part of the *I/O Blocks* category.

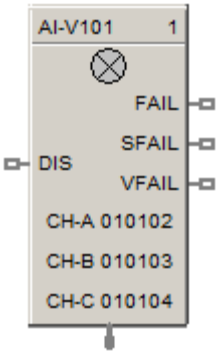

Function

Reads values of Analog Inputs from specified real I/O addresses. Converts analog input value to corresponding output (OUT) in engineering units based on the necessary scaling and conversions performed.

Input Type = **LINEAR** - converts analog input value to corresponding output in units based on a linear 0 to 100% scale and specified high and low range values.

OUT = Scale x Input value + Bias

where:

$$\text{Scale} = \frac{\text{High Range Value - Low range value}}{100}$$

Input value = Analog Value in percent

Input Type = **T/C or RTD** - converts analog input value in engineering units using the range of Input Type

AI-V differs from AI in that multiple inputs (up to 3) may be specified, and the values of the inputs (whose channel has not failed) must match for the input value to be considered good overall. Otherwise the FAIL pin becomes ON and the Fail-safe value is used as output instead of any input value. If there is only one input used, then the state of the single channel determines the state of the FAIL pin.

If none of the inputs are used (i.e. all three are not enabled by user), the function block will behave the same as when the DIS (Disable) pin is ON.

Please refer to the descriptions of the DIS, FAIL, SFAIL, and VFAIL pins below to get a good understanding of the block behavior.

NOTE: For calibration of AI channel, please follow following steps:

1. Create a configuration using AI-V function block and configure the addresses of input channels to be used.

2. Download the configuration to controller.

3. Now follow the steps given "*Calibrate AI Channel* " section for each AI channel selected in the above configuration.

Input

Analog value(s) from specified real I/O address(s).

DIS = Disable Signal:

DIS pin = ON:

Results in disabling of the AI channels. Output of the block in this case is the Fail-safe value. All output pins (FAIL, SFAIL and VFAIL) pins becomes OFF.

DIS pin = OFF:

Results in normal operation i.e. it enables the function block.

All output pins (FAIL, SFAIL and VFAIL) pins behave as expected for a normal operation (as described below).

DIS pin = Open:

Results in normal operation i.e. it enables the function block.

All output pins (FAIL, SFAIL and VFAIL) pins behave as expected for a normal operation (as described below).

Output

OUT = Analog Input value in engineering units.

FAIL = Failed – If ON, indicates that the block output is set to Fail-safe. Possible cause for this is:

In the case where three inputs are used:

One input has a failed channel and the good channels have a validation failure.

OR

All three inputs have failed channels.

In the case where two inputs are used:

Two inputs have good channels and a validation failure.

OR

Both inputs have failed channels.

SFAIL = Source Failure – If ON, indicates a failure of one or more of the analog channel(s). Possible cause for this is:

Power failure

One of the AI channels failed

VFAIL = Validation Failure – If ON, indicates that the values of the “good” channels disagree.

The percent deviation allowed from input to input is +/- 3% i.e. if the input to input is outside of +/- 3 %, VFAIL will be ON.

Block properties

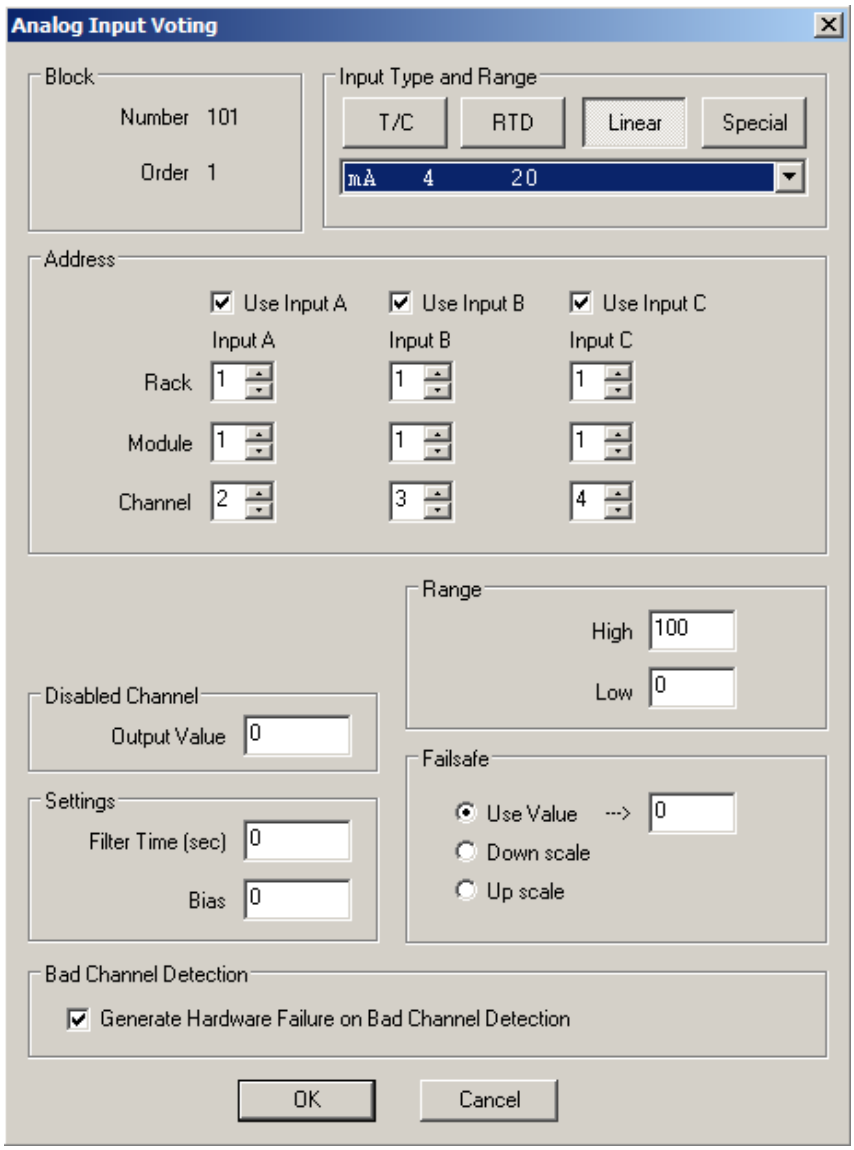

Double click on the function block to access the function block properties dialog box

Configuration parameters

Analog Input Voting configuration parameters.

Properties Group	Parameter	Index #	Parameter Description	Value or Selection
Block	Order	N/A	Execution Order for Block To change, See "Execution Order".	Read Only.
Address	Use Input A	4	Enable or Disable Input A	Click on checkbox to select or deselect
	Use Input B	5	Enable or Disable Input B	Click on checkbox to select or deselect
	Use Input C	6	Enable or Disable Input C	Click on checkbox to select or deselect
	Rack (for each Input)	N/A	This is the address of the selected Rack.	Enter a value: from 1 to 5.
	I/O Module (for each Input)	N/A	Address of selected I/O module	Enter a value: from 1 to 12
	Channel (for each Input)	N/A	Channel on selected I/O Module	Enter a value: 1 to 16, depending on module type.
Input Type and Range	Input Type and Range	N/A	Thermocouple, RTD, Linear Input types or Special Input Types - Carbon or Oxygen	Click on the "Input Type and Range" group button and select an input from list box. Click Here for Input Types and Ranges
Range	High Range Value	N/A	For Linear Inputs Only - output value that corresponds to 100 % input value For example: Actuation Input = 4-20mA Process variable = Flow Range of Flow = 0 to 250 gal/min High Range Display Value = 250 Low range Display Value = 0 Then 20mA = 250, 4mA = 0	Enter a value: - 99999 to 99999
	Low Range Value	N/A	For Linear Inputs Only - output value that corresponds to 0 % input value For example: See "High Range Value"	Enter a value: -99999 to 99999
Disable Channel	Output Value	13	The output value when the AI channel is disabled. Disable = ON	Enter a value Default = 0
Settings	Filter Time (sec)	7	A software digital filter is provided for the input designated to smooth the input. You can configure the first order lag time constant from 1 to 120 seconds. 0=no filter	Enter a value: 0 to 120 seconds

	Bias	8	Bias is used to compensate the input for drift of an input value due to deterioration of a sensor, or some other cause.	Enter a value: -99999 to 99999
Failsafe	Use Value field	N/A	The output value to which the output will go to protect against the effects of failure of the equipment, such as, fuel shut-off if there is loss of flame in a furnace, or a sensor break.	Enter a value in Engineering Units -99999 to 99999
	Use Value	N/A	Use the value entered in the appropriate field.	Click on Radio button to select
	Downscale	N/A	LINEAR OUT = Value set at "Low range value" field. T/C or RTD OUT = Value of Low range implied by input type.	Click on Radio button to select
	Upscale	N/A	LINEAR OUT = Value set at "High range value" field. T/C or RTD OUT = Value of High range implied by input type.	Click on Radio button to select
Bad Channel Detection	Generate Hardware Failure on Bad Channel Detection	N/A	Check this to generate a hardware failure diagnostic if a bad AI channel is detected. If unchecked, a diagnostic will not be generated, which may be desirable for inputs used for monitoring only.	Click on checkbox to select or deselect

Example

Figure 10 below shows a function block diagram using an AI-V function block. The AI-V block reads in analog input values from real I/O addresses, and then passes the calculated value to the PID block, for it to control the value, to be then output to real I/O addresses by the AO block. The source fail (SFAIL) and validation fail (VFAIL) pins are also used for monitoring the statuses.

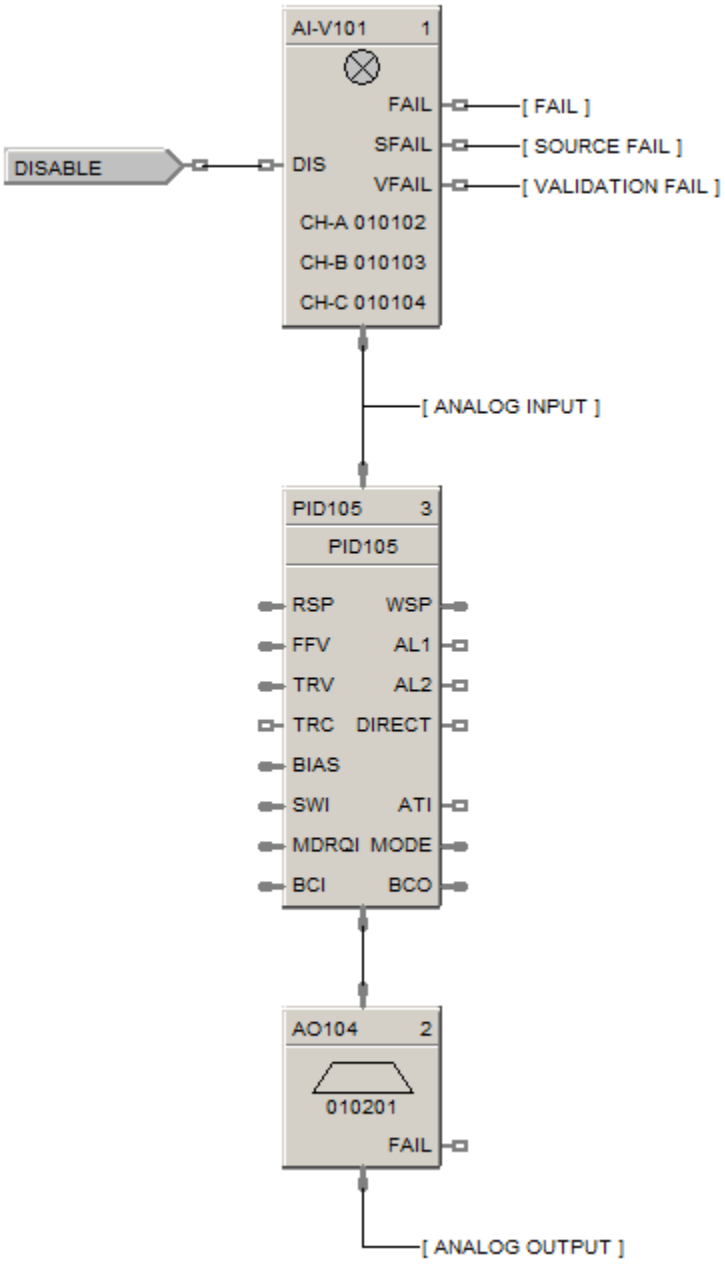

Figure 10 - ALM Alarm Function Block

Description

The **ALM** label stands for the **Analog Alarm function.**

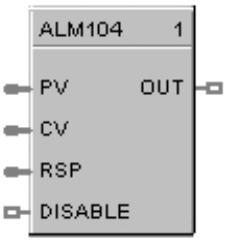

This block is part of the *Alarms/Monitor* category.

Function

The analog alarm block accepts an analog signal as a process variable and compares it to a limit value (setpoint) to determine an alarm condition. The setpoint may be entered by the user or be another analog signal in the controller.

Alarm actions may be high, low or high deviation, low deviation or band deviation. For deviation alarming, a second analog signal provides the reference and setpoints represent deviation from the reference.

The alarm output may be inverted to create normally active digital output. A user selection for latching until acknowledged or automatically reset is provided.

A user-specified hysteresis value in the engineering units of the process variable is provided.

An on-delay time value up to 240 seconds is available to prevent momentary alarm actions. A digital reset input is available to disable alarm actions.

Note: If the alarm configured on output of this block and block is in safety sheet, alarm can't be acknowledged in controller Run-Lock mode.

Alarm type function

(PV>SP) High Process Variable/Local Setpoint

- OUT = ON If the PV is greater than the local Setpoint
- OUT = OFF If the PV is less than the Local Setpoint minus Hysteresis

(PV>CV) High Process Variable/Compare Value

- OUT = ON If the PV is greater than the Compare Value (CV) i.e. Alarm Setpoint
- OUT = OFF If the PV is less than the Compare Value minus Hysteresis

(PV<SP) Low Process Variable/Local Setpoint

- OUT = ON If the PV is less than the Local Setpoint
- OUT = OFF If the PV is greater than the Local Setpoint + Hysteresis

(PV<CV) Low Process Variable/Compare Value

- OUT = ON If the PV is less than the Compare Value (CV)
- OUT = OFF If the PV is greater than the Compare Value + Hysteresis

[(PV-CV)>SP] High Deviation Alarm

- OUT = ON If the PV input minus the CV input is greater than the Local Setpoint
- OUT = OFF If the PV input minus the CV input is less than the Local Setpoint minus Hysteresis

[(CV-PV)>SP] Low Deviation Alarm

- OUT = ON If the CV input minus the PV input is greater than the local Setpoint
- OUT = OFF If the CV input minus the PV input is less than the Local Setpoint minus Hysteresis

|PV-CV|>SP Band Deviation Alarm

- OUT = ON If the absolute value of (PV–CV) is greater than the Local Setpoint
- OUT = OFF If the absolute value of (PV–CV) is less than the Local Setpoint minus Hysteresis

Inputs

PV = Process Variable
CV = Compare Value
RSP = Remote Setpoint
DISABLE = On disables alarm action.

Output

OUT = Output

Block properties

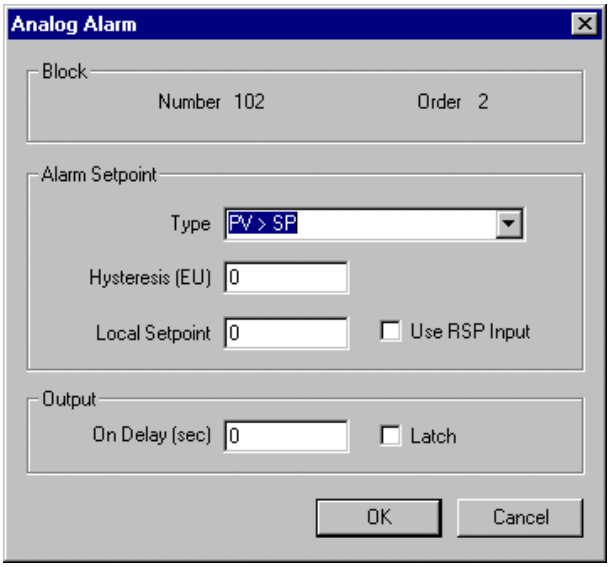

ATTENTION

Local Setpoint is set in the Process Control Designer unless “Use RSP Input” is enabled. Use an Analog Variable connected to one RSP input (use RSP Input Enabled) if you want to change alarm setpoint at the operator interface via the Variable Edit Display.

Table 16 Analog alarm configuration parameters

Parameter	Index #	Parameter Description	Value or Selection
Block Order	N/A	Execution Order for Block	Read Only. To change block order, right-click on a Function Block and select Execution Order.
Alarm Setpoint Type	N/A	Alarm Action Type	**PV>SP** = High Process Variable/Local Setpoint **PV>CV** = High Process Variable /Compare Value **PV<SP** = Low Process Variable/Local Setpoint **PV<CV** = Low Process Variable /Compare Value **(PV-CV)>SP** = High Deviation Alarm **(CV-PV)>SP**= Low Deviation Alarm **IPV-CVI>SP** = Band Absolute Deviation Alarm
Hysteresis	4	Hysteresis in engineering units can be set from 0 to the input span monitored variable.	0 to 99999.9 in Engineering Units
Local Setpoint	0	Local Setpoint value in engineering units or a calculation from another function block via RSP (see “Use RSP Input”).	0 to 99999.9 in Engineering Units
Use RSP Input	1	Remote Setpoint selection	Click on box to use Remote Setpoint (RSP).
Output Latch	3	ON latches the alarm output until acknowledged. *To acknowledge an alarm, it must be tagged and entered into an alarm group. This will provide for the acknowledgment from the operator interface.*	Click on Box to select.
On Delay	6	Number of seconds the alarm is active before activating OUT.	0 to 240 seconds

Examples

Example 1 shows an ALM function block being used for Band Deviation Alarm—a control loop process variable is compared to the loops working setpoint. A variable is used as the setpoint value to allow periodic changes. (RSP enabled). The Output contains a tag identification that will be used to identify the alarm state.

Example 2 shows an ALM function block being used to alarm on PV>SP.

EXAMPLE 1

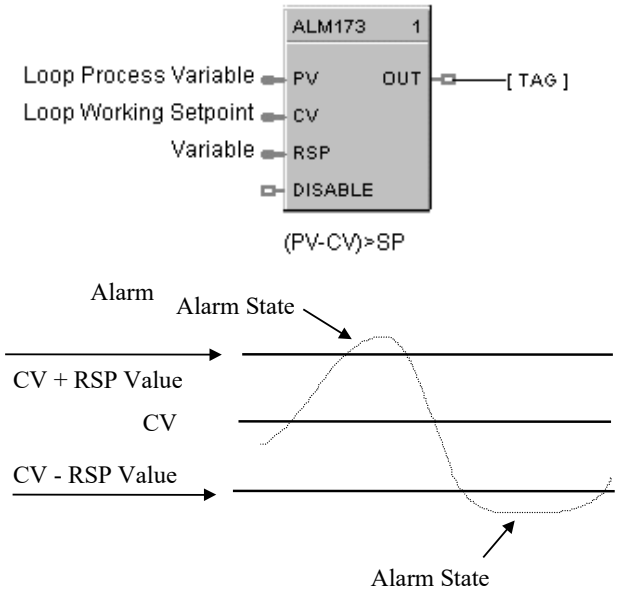

EXAMPLE 2

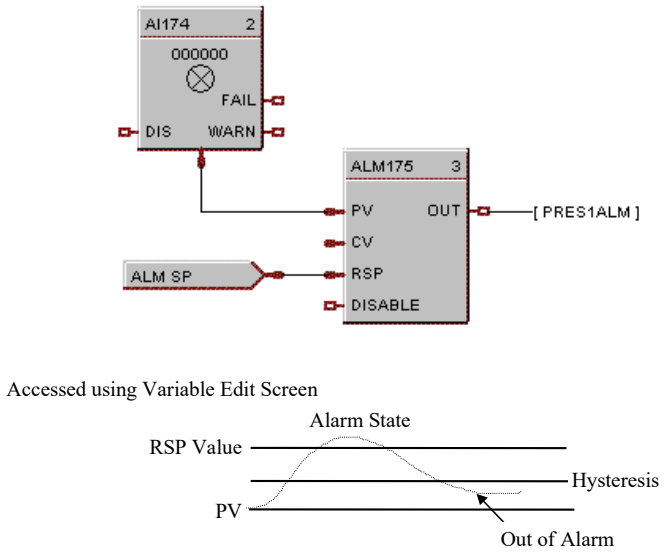

Figure 11 ALM function block example

ALMGR Alarm Group Function Block

Description

The **ALMGR** label stands for the **Alarm Group function.**

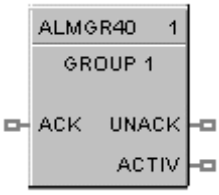

This block is part of the *Alarms/Monitor* category.

Function

The Alarm Group Function Block allows you to tie alarm groups into the Control Strategy particularly when you do not have an Operator Interface. It provides remote acknowledgement of all alarms in the group.

This block is always stored in the reserved block area (40 thru 59), are always in the configuration whether visible in the FBD or not, and all outputs of the block are updates every alarm scan.

Input

ACK = acknowledges all alarms in group (rising edge). Clears UNACK.

Output

UNACK = ON when any of the alarms in the group have not been acknowledged.

ACTIV = ON when any of the alarms in the group are active.

Assign an Alarm Group

When you drag and drop an Alarm Group function block onto the worksheet, the "Assign Alarm Group" dialog box opens.

Select an Alarm Group (1 - 20) from the drop down menu, then click "OK".
The function block will appear on the Function Block Diagram.

Configure an Alarm Group

1. Double-click on the Alarm Group function block. The Alarm Group Configuration dialog box will appear. The Group Number appears on the dialog box.
2. Digital signals will be displayed in the "Selected Tags" field.
3. Enter the group title. Use any mix of numbers, letters, and spaces.
4. Click on a Signal Tag name, then click on **ADD**. The selected signal tag will be placed in the next available position in the "Selected Tags" field,
   OR
   Select a position in the "Selected Tags" field, then click on **INSERT.** The selected signal tag will be placed in the position chosen in the "Selected Tags" field and the other signal tags will reorder as required.
5. Repeat the selection for up to 12 tags for each group.

6. Select a signal in the "Selected Tags" field and click on **ALARM DETAILS**, and enter Alarm details in the Dialog Box.

7. Click OK.

You can also select "Alarms" from:
- the EDIT menu on the Process Control Designer Main Menus
- The O/I Worksheet Toolbar button
  (when you have an O/I)
- the FBD Worksheet toolbar button
  (when you **do not have** an O/I and **do not** need to use Alarm Group logic in the control strategy)

Example

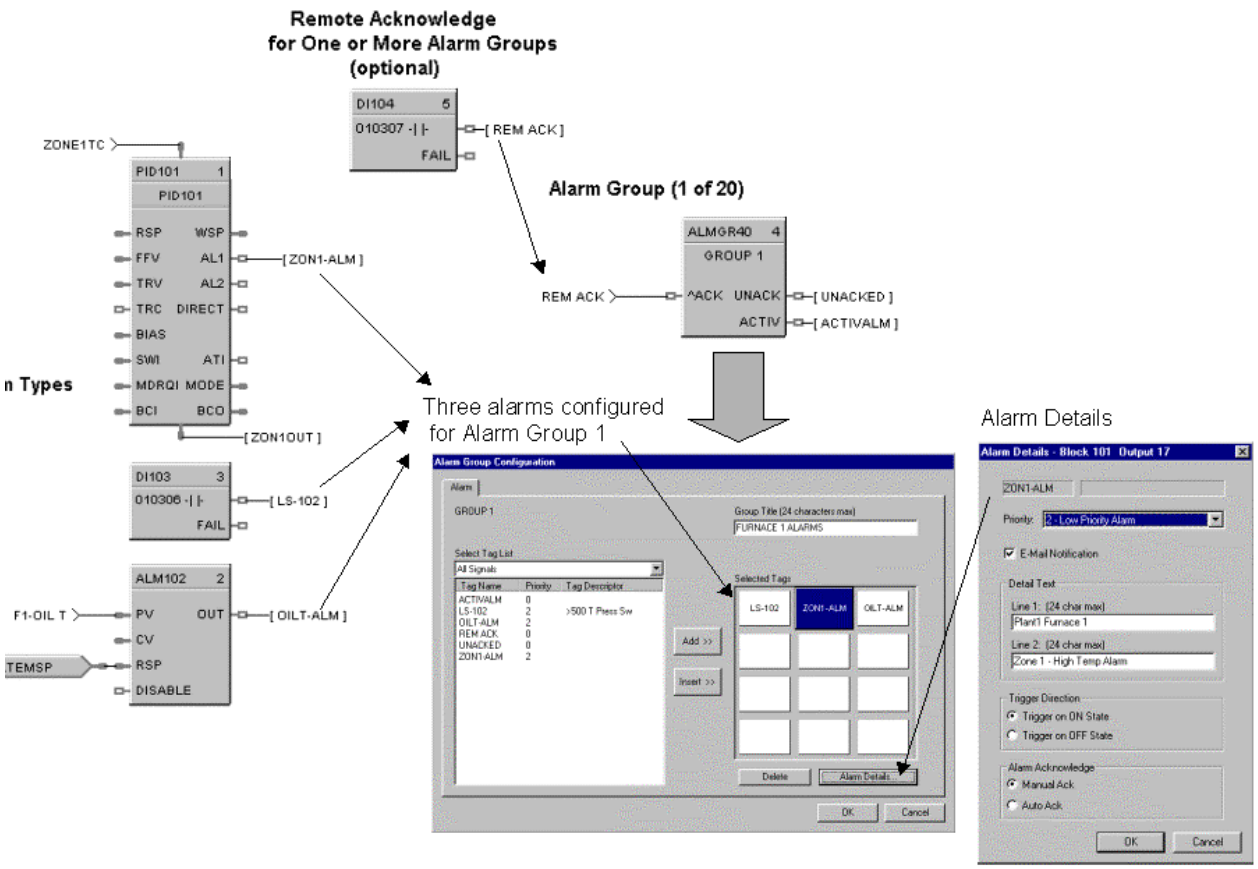

Figure 12 ALMGR Function Block Example

ALT Alternator Function Block

Description

The **ALT** label stands for **Alternator** Function.

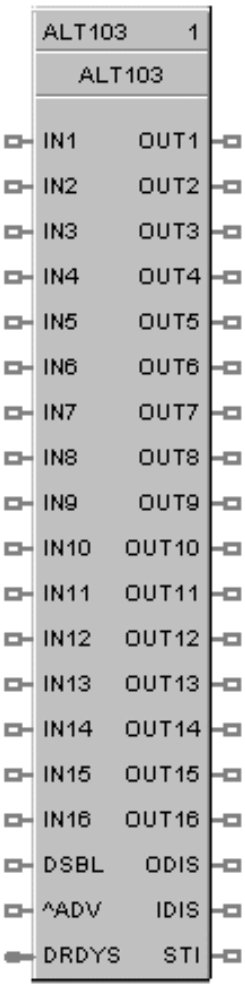

This block is part of the *Auxiliary* category.

Function

The Alternator (ALT) function block is typically used to alternate the starting sequence of a group of pumps, valves, filters, etc. Each block accepts up to 16 inputs and controls up to 16 outputs.

There are four unique alternation styles used to control the output starting sequence so that you can limit the amount of repeat or continuous usage of a single device (pumps, valves, etc.). If an output device fails, or has been disabled, then an alternate device will be used in order to meet the requested demand. You may specify the alternators active outputs and the order in which the outputs are manipulated.

Each configuration is limited to a maximum of 6 Alternator function blocks.

Inputs

IN1 – IN 16 =. Sixteen digital inputs for requesting an output device. Unconnected pins default to OFF.

DSBL = determines the status of the block:

OFF = Status of block is **RUN**
- function blocks process normally
- inputs and outputs reevaluated based on current states and style settings
- the STI output pin is set to ON

ON = Status of block is **OFF**
- function processes disabled, no input/output evaluation
- all On and Off delay timers are reset
- block's style setting maintained
- all outputs turned off
- the STI output pin set to OFF.

^ADV = used with all styles except Direct. If "Activate Advance" selected in configuration, an OFF to ON transition will rotate the output order selection.

DRDYS = digital encoded device-ready signal, usually the bit encoded output of the Digital Encoder Block (DENC) representing 16 digital states. No signal = 0
Bit 1 = OUT 1, Bit 16 = OUT 16
Example: If bit 3 is ON, "OUT 3" is enabled and its state can turn On/Off based on the Alternator Sequence. If bit 3 is OFF, "OUT 3" is disabled. Out 3's state will change to OFF.

Outputs

OUT1 – OUT16 =. Sixteen digital outputs, which turn ON and OFF based on the input demand [IN1-16]. Outputs can be manually disabled by way of the Outputs tab in the block properties. Outputs can be programmatically disabled by the use of the "DRDYS" input pin.

ODIS = ON when any one of the outputs (OUT) is manually disabled, otherwise OFF

IDIS = ON when any one of the inputs (IN) is manually disabled, otherwise OFF

STI = ON when the block state is RUN; OFF when the block state is OFF.

Configurable Parameters

The **Alternator** properties dialog box is divided into four tab cards:

GENERAL
INPUTS
OUTPUTS
SEQUENCE ORDER

Click on the tab to access the properties for that tab.

GENERAL tab

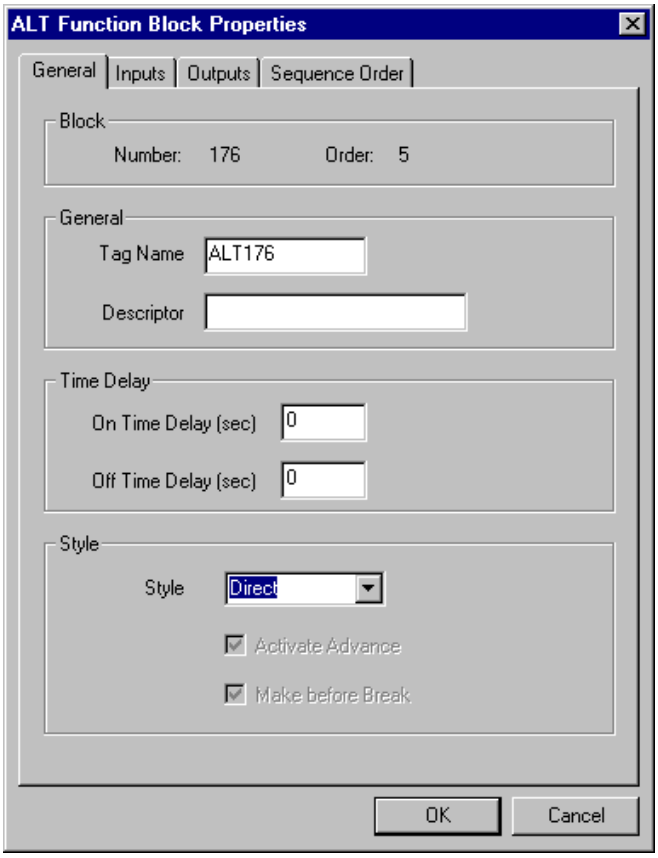

Style selections

A style is a method used to control the cycling of the 16 outputs. There are four styles from which to choose: Direct, Rotary (Last ON/First OFF), First ON/First OFF (FOFO), or Fixed (with Advance feature). This parameter is initially configured here and can be altered from an operator interface.

Important: A style change request does not take effect until all inputs (IN1 - 16) are OFF.

DIRECT Monitors up to 16 **inputs** and maps them, using the user adjustable map order on the Output tab, directly to the outputs.
If the Inputs selected are 1, 2, 3, 4, 5, 6 and the Output order mapped is 6, 3, 4, 1, 5, 2; when Input 3 is activated, Output 4 is enabled; or if Input 1 is activated then Output 6 is enabled.

ROTARY Uses the sum of the 16 inputs that are set to ON to determine the required **demand** for outputs. The output order is managed in a Last ON/First OFF basis (LOFO).
If the Inputs selected are 1, 2, 3 and the mapped sequence is 1, 2, 3 the alternator sequence changes when NO outputs (pumps) are required or there is a request to Advance (see Activate Advance).
Depending on the capacity required, Outputs 1, 2, 3 come on in order. When the **demand** falls, Output 3 goes OFF, then Output 2, then Output 1. When Output 1 turns off, the Rotary sequence advances and Output 2 starts the next cycle.
If an input pin is set to “not available”, then that output is forced to OFF and the next available output in the mapping order is turned ON. If the previously bypassed output later becomes enabled, then it will not be used until the demand increases.

FOFO Uses the sum of the 16 inputs that are set to ON to determine the required **demand** for outputs. The output order is managed in a First ON/First OFF basis (FOFO).
If 3 Inputs are ON (no mapping), the Alternator sequence changes (first one in the list moves to the end of the list) as the inputs turn OFF or, when there is a request for Advance (see Activate Advance).
If an input pin is set to “not available”, then that output is forced to OFF and the next available output is turned ON. If the previously bypassed output later becomes enabled, then it will not be used until the demand increases.

FIXED Uses the sum of the 16 inputs that are set to ON to determine the required **demand** for outputs. The output order is managed in a First ON/First OFF basis (FOFO).
If the Inputs selected are 1, 2, 3, 4 and you map a fixed sequence 4, 2, 3, 1 the sequence will not change unless you select the Advance feature (see Activate Advance).
It takes a direct command (OFF to ON signal) before the output order map rotates to the 2, 3, 1, 4 sequence.
If an output pin is not available then that output is forced OFF and the next available output in the mapping order is turned ON. If the previously bypassed output later becomes enabled, then it will not be used until the demand increases.

Activate advance

Used with all styles except Direct. If you select “Activate Advance” (click on box on General tab to select), an OFF to ON transition of the **^ADV** Input pin will rotate the output order sequence. **Make before Break** selection determines how this is done for Rotary and FOFO only.

Make before break

This feature works on input demand and with the Advance input, it is available for Fixed, Rotary and FOFO styles.

When the ALT function block receives an Advance input (^ADV pin) and **Make before Break** is selected (click on box on General tab to select) the next output in the sequence is activated before deactivating an output. When the selection box on the General tab is not selected (**Break before Make**) the output is removed before advancing the sequence and activating the next output.
The ON and OFF Delay Timers are used with this feature. See next figure.

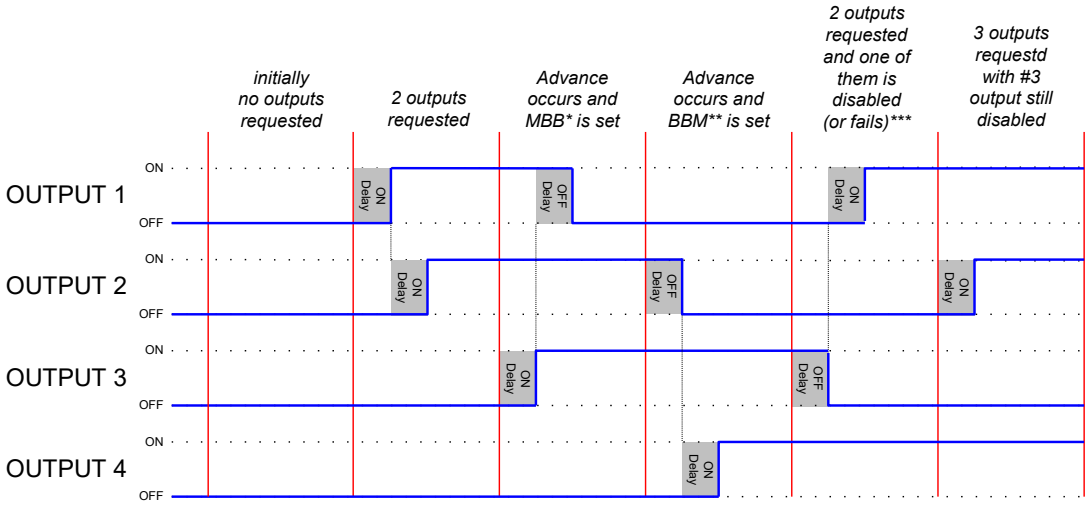

* MBB - Make before Break
** BBM - Break before Make
*** When an output is in use and it becomes disabled or fails, the BBM feature is used to turn on the next available output

ON/OFF delay timers

There is an On-delay timer and Off-delay timer value that applies to all 16 outputs. These timers are the same times used with the Make/Break feature. There is one period for all On-delay times and one period for all Off-delay times.

If an output is waiting in an On-delay timer and new input conditions the output state to turn OFF, then the delay timer is reset, the output does not change state. If an output is waiting in an Off-delay timer and new input conditions the output state to turn ON, then the delay timer is reset, the output does not change state.

The timers operate in a cascade style. Example: If three outputs are requested, output #1 Turns On, then #2 which is followed by #3.

Table 17 ALT general tab parameters

Properties Group	Parameter	Index #	Parameter Description	Value or Selection
General	**Tag Name**	N/A	32-characters unique tag name (ASCII characters only)	Up to 32-characters
	Descriptor	N/A	Block description	Up to 32-characters
Time Delay	**On-Time Delay (seconds)**	1	Delay time used before turning ON the next output in the sequence. Used with "Make/Break" feature ***See "ON/OFF Delay Timers"***	Range: 0 – 99999 sec Default = 0 Value **can** be changed from the Operator Interface
	Off-Time Delay (seconds)	2	Delay time used before turning OFF the next output in the sequence. Used with "Make/Break" feature ***See "ON/OFF Delay Timers"***	Range: 0 – 99999 sec Default = 0 Value **can** be changed from the Operator Interface
Styles	**Direct**	N/A	***See "Style Selections" for definitions***	**DIRECT** **ROTARY** **FOFO** **FIXED** The parameter selected here **can** be altered from an operator interface.
	Rotary			
	FOFO			
	Fixed			
Make before Break		3	Determines how an OUT is toggled ON and OFF. Used with "Rotary" and "FOFO" styles ***See "Make before Break" for definition.***	**ON** = Make before Break **OFF** = Break before Make Default = Make before Break
Activate Advance Used with all styles except Direct		0	Activates the "Advance" feature. This allows an OFF to ON transition of the **^ADV** Input pin to rotate the output order sequence. ***See "Activate Advance" for definition.***	Click on box to turn **ON** Activate Advance The parameter selected here **cannot** be altered from an operator interface

INPUT tab

Click on the “Enable Input” block to activate that particular Input [1 – 16], deselect to inactivate it. “Enable” is the default. (Indices 6 thru 21)

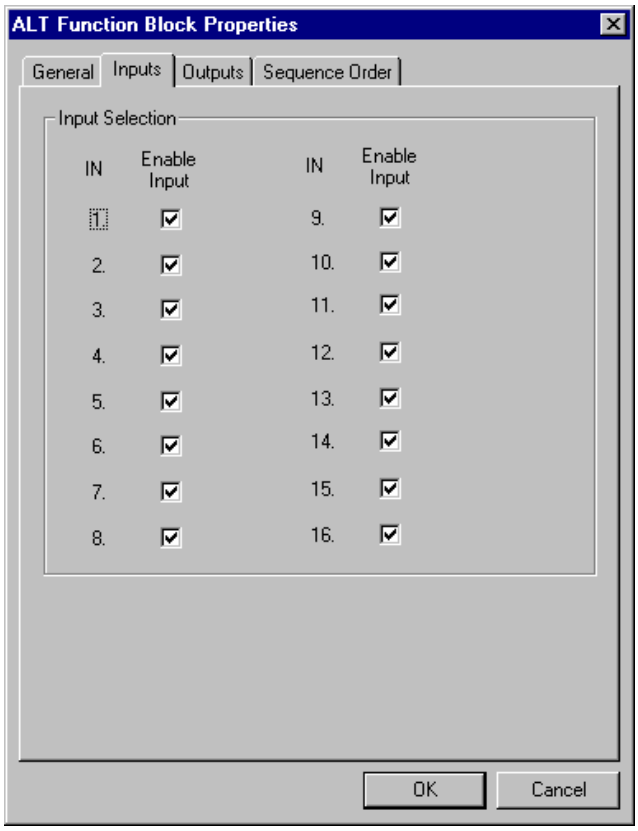

OUTPUT tab

Click on the “Enable Output” box to activate that particular Output [1 – 16], deselect to inactivate it. “Enable” is the default. (Indices 22 thru 27)

Device Ready Enable

Click on the “Use Device Ready [DRDYS] “ box to activate the DRDYS inputs from the Digital Encoder function block. OFF (deselect) ignores all the DRDYS from the Digital Encoder block and assumes all device ready values are on. (Index # 54)

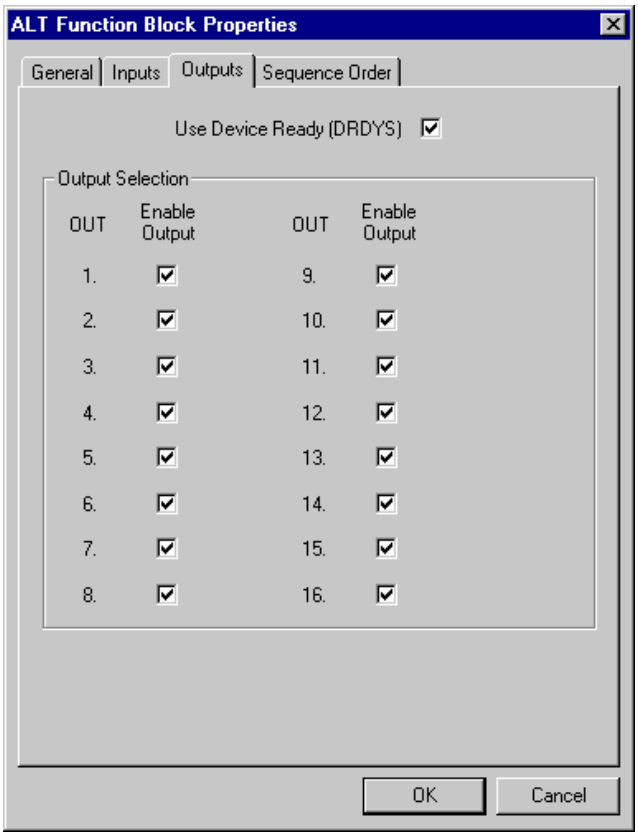

Direct Style selected

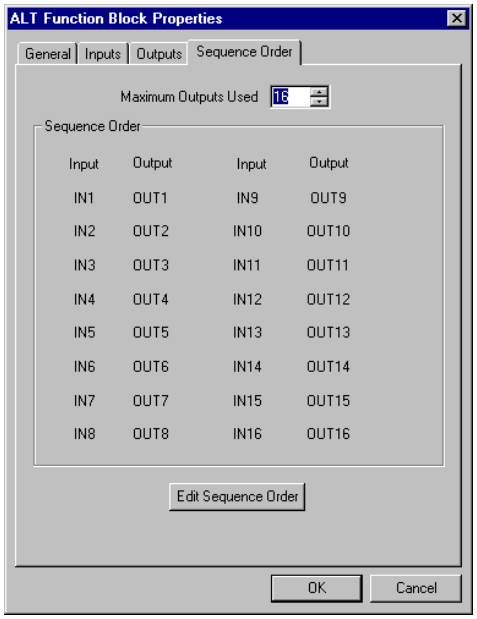

Rotary, FOFO, or Fixed Style selected

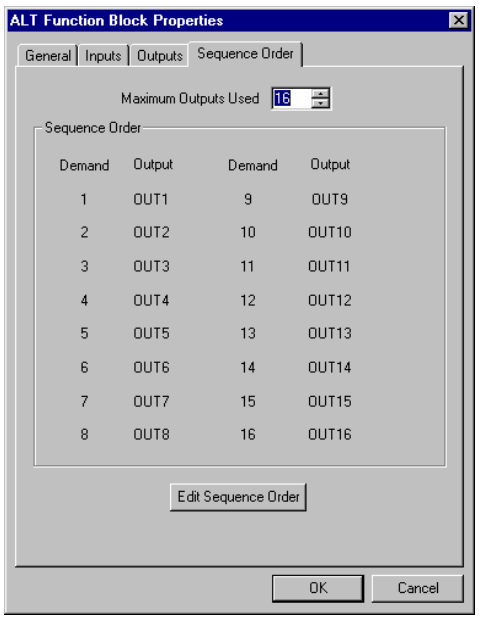

Table 18 ALT sequence tab parameters

Sequence Number	Parameter Field	Action	Selections	Comments
1	Maximum Outputs used	Use the scroll buttons in the active field and select the number of outputs to be used.	1 to16	Selecting less than 16 Outputs will make the unused Outputs in the “Output Selection” column = 0 after “OK” is selected.
2	Edit Sequence Order	Click on the “Edit Sequence Order” button to activate the Sequence Order dialog box. Click, Drag, and release any output to any order, as shown to the left, to select the sequence in which the outputs will be turned on. Click “OK”.	Sequence Order Default = OUT1, OUT2, OUT3 : : OUT15, OUT16.	May be changed by a special message.

Example

Figure 13 shows a function block diagram using an ALT function block.

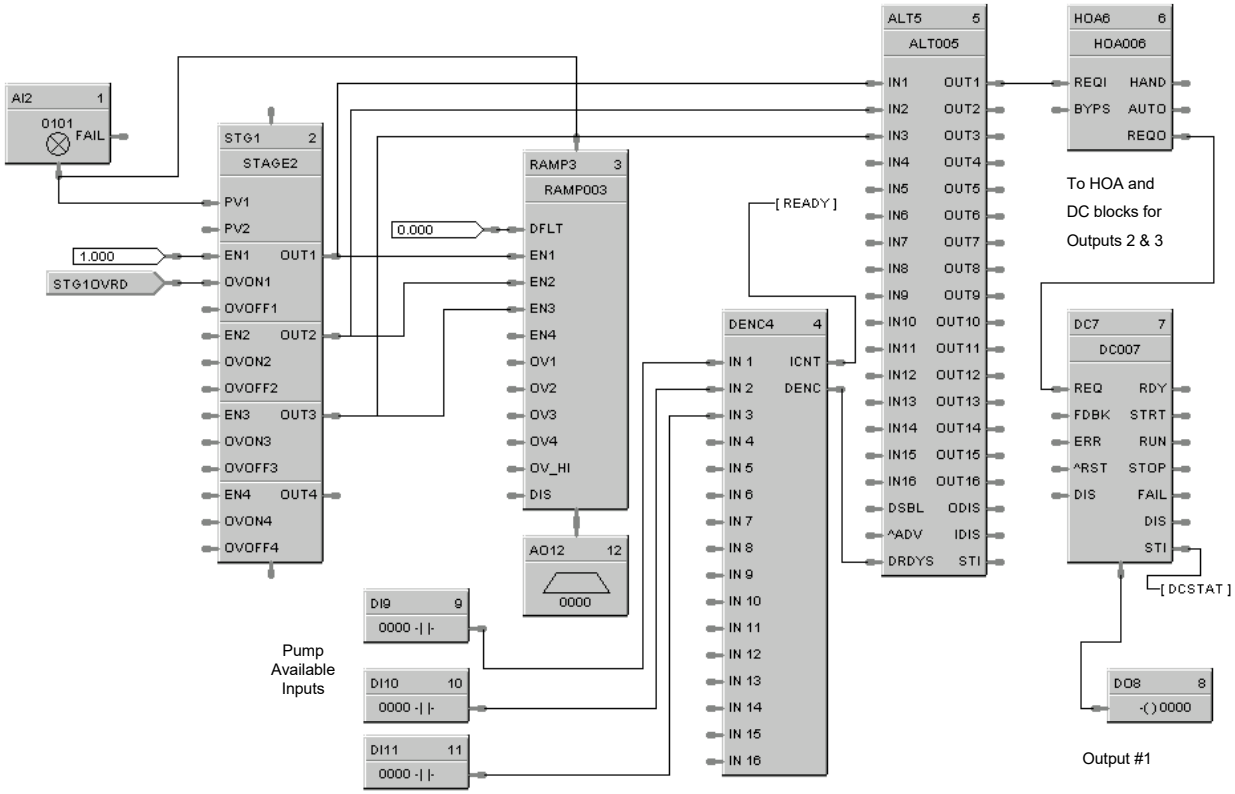

Figure 13 ALT function block example

AMB Auto/Manual Bias Function Block

Description

The **AMB** label stands for **Auto/Manual Bias** Function.

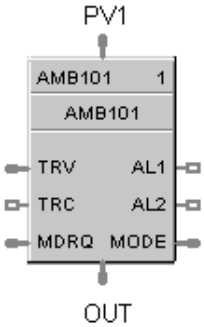

This block is part of the *Loops* category.

Function

On transfer from Manual to Auto; Bias is calculated to make PV + Bias = Output.

Inputs

PV1 = Process Variable Input (%)

TRV = Output Track Value in percentage (Output = TRV Value when TRC is ON).

TRC = Output Track Command—1 = enable TRV (Mode = Local Override), 0 = disable

MDRQI= External Mode Request (connected to the MDRQO output of a MDSW function block) encoded as follows:

0.0 = No Change
1.0 = Manual Mode Request
2.0 = Automatic Mode Request

Outputs

OUT = Control Output (–5 % to 105 %)

AL1 = Alarm 1

AL2 = Alarm 2

MODE = Actual Mode encoded as follows: (Connect to Mode Flags block [MDFL] to encode mode status.)

4.0 LSP AUTO
5.0 LSP MAN
7.0 LSP LO (Local Override)

Configuration parameters

The Auto/Manual Bias properties dialog box is divided into four tab cards

GENERAL
START/RESTART
RANGE/LIMIT
ALARMS

Click on the tab to access the properties for that tab.

GENERAL tab

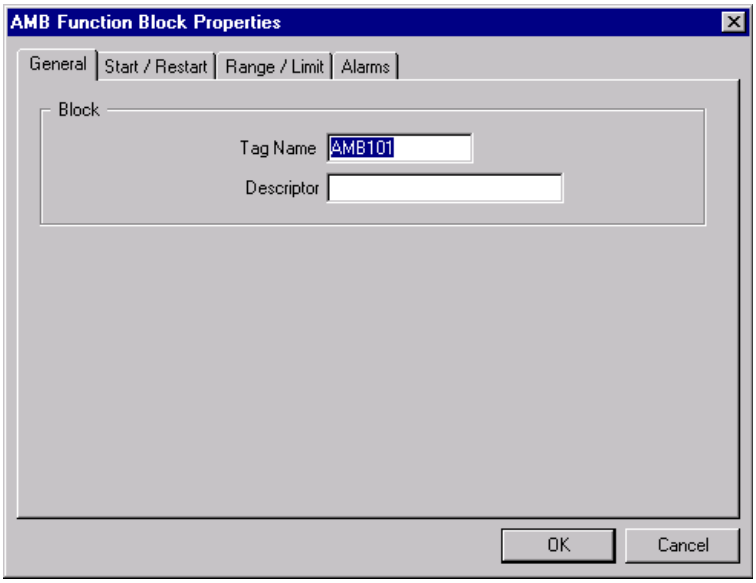

Table 19 AMB General tab configuration parameters

Parameter	Index #	Parameter Description	Value or Selection
Block Tag Name	N/A	32-characters unique tag name (ASCII characters only)	Up to 32-characters
Block Descriptor	N/A	Block description	Up to 32-characters

Start/Restart tab

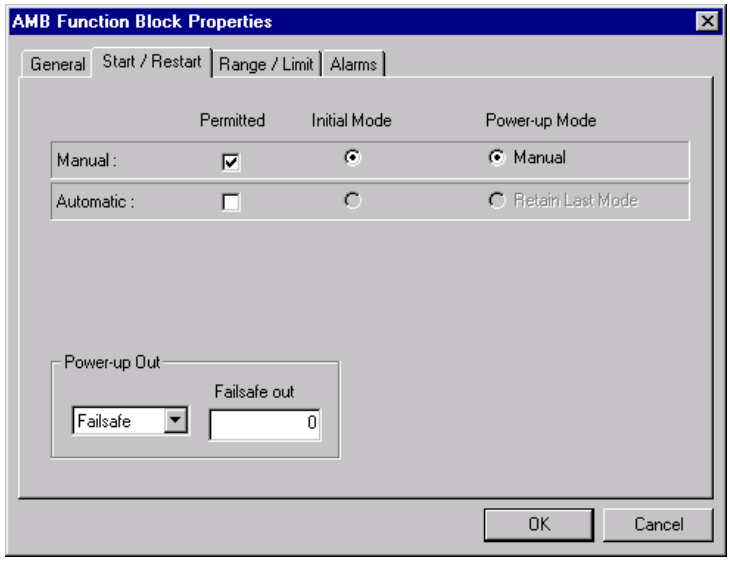

Table 20 AMB Start Restart tab configuration parameters

Parameter	Index #	Parameter Description	Value or Selection
Permitted Mode	N/A	Mode permitted for the initial start and power up mode.	**MAN** Manual **AUTO** Automatic
Initial Mode	N/A	Mode at NEWSTART **Newstart** is the first scan cycle following the cold start of the controller	**MAN** Manual **AUTO** Automatic
Power up Mode	N/A	Mode at power up	**MAN** Manual **PREVIOUS** Same mode (auto or manual)
Power Up Out	N/A	Output at Power up	**FAILSAFE** Failsafe output value. **LAST OUT** Same as at power down.
Failsafe Out	9	Failsafe Output Value	–5 to 105 (default 0)

RANGE/LIMIT tab

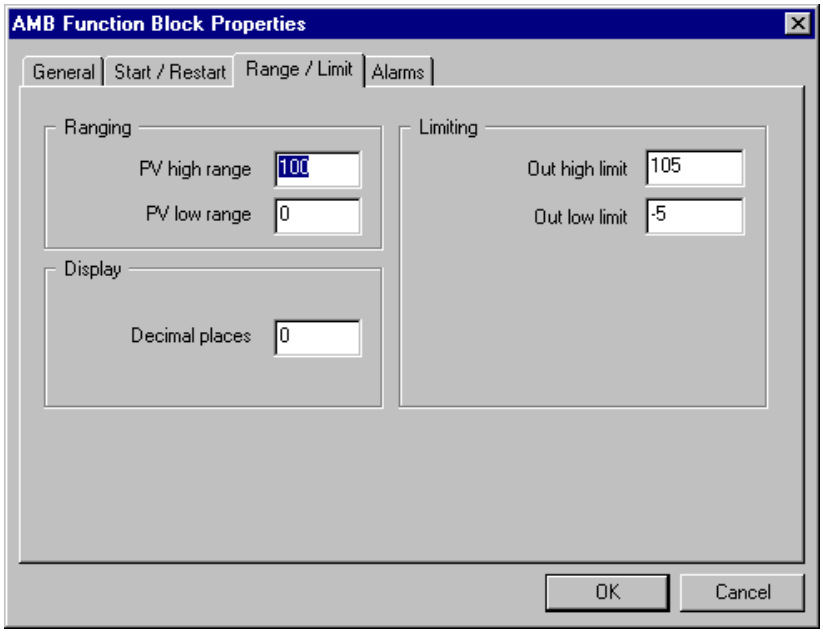

Table 21 AMB Range/limit tab configuration parameters

Parameter	Index #	Parameter Description	Value or Selection
PV High Range	0	PV High Range Value	–5 % to 105 %
PV Low Range	1	PV Low Range Value	–5 % to 105 %
Display Decimal Places	N/A	Number of digits to display after decimal point.	0 to 5
Out High Limit	7	Output High Limit Value - prevents the Output from going above the value set here.	–5 % to 105 %
Out Low Limit	8	Output Low Limit Value - prevents the Output from going below the value set here.	–5 % to 105 %

ALARMS tab

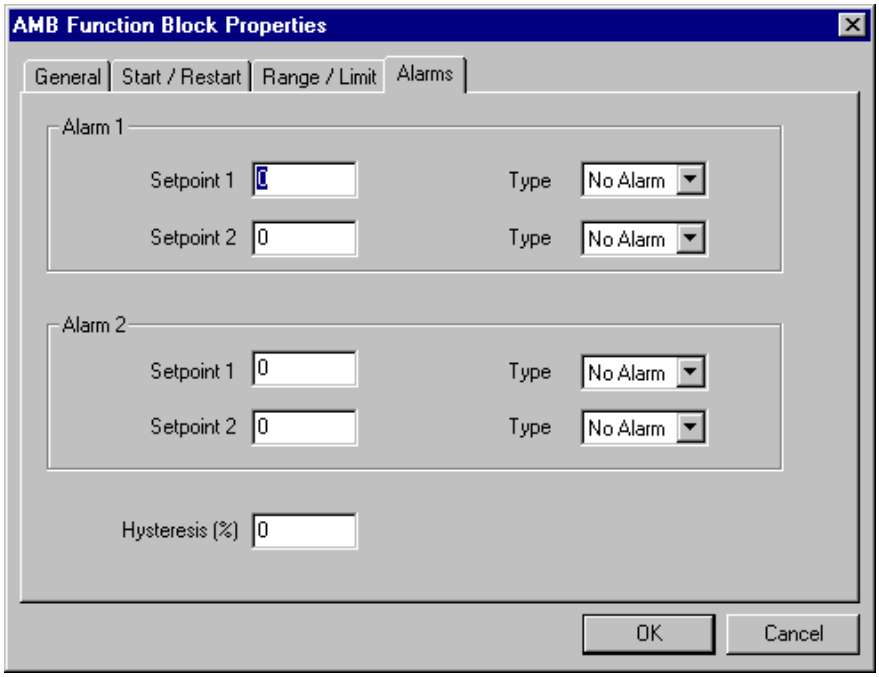

Table 22 AMB Alarm tab configuration parameters

Parameter	Index #	Parameter Description	Value or Selection
Alarm 1 Setpoint 1	10	**Alarm 1 Setpoint 1 Value** - this is the value at which you want the alarm type chose below to activate	–5 % to +105 % (default 0)
Alarm 1 Type	N/A	Alarm 1 Setpoint 1 Type - select what you want Alarm 1 Setpoint 1 to represent.	Selections: NO ALARM AL_PV_HI AL_PV_LO AL_OUT_HI AL_OUT_LO
Alarm 1 Setpoint 2	11	Alarm 1 Setpoint 2 Value	Same as **Alarm 1 Setpoint 1**
Alarm 1 Type	N/A	Alarm 1 Setpoint 2 Type	Same as **Alarm 1 Setpoint 1**
Alarm 2 Setpoint 1	12	Alarm 2 Setpoint 1 Value	Same as **Alarm 1 Setpoint 1**
Alarm 2 Type	N/A	Alarm 2 Setpoint 1 Type	Same as **Alarm 1 Setpoint 1**
Alarm 2 Setpoint 2	13	Alarm 2 Setpoint 2 Value	Same as **Alarm 1 Setpoint 1**
Alarm 2Type	N/A	Alarm 2 Setpoint 2 Type	Same as **Alarm 1 Setpoint 1**
Alarm Hysteresis %	18	Alarm Hysteresis in %	0 % to 5 %

Example

Figure 14 shows an function block diagram using an AMB function block.

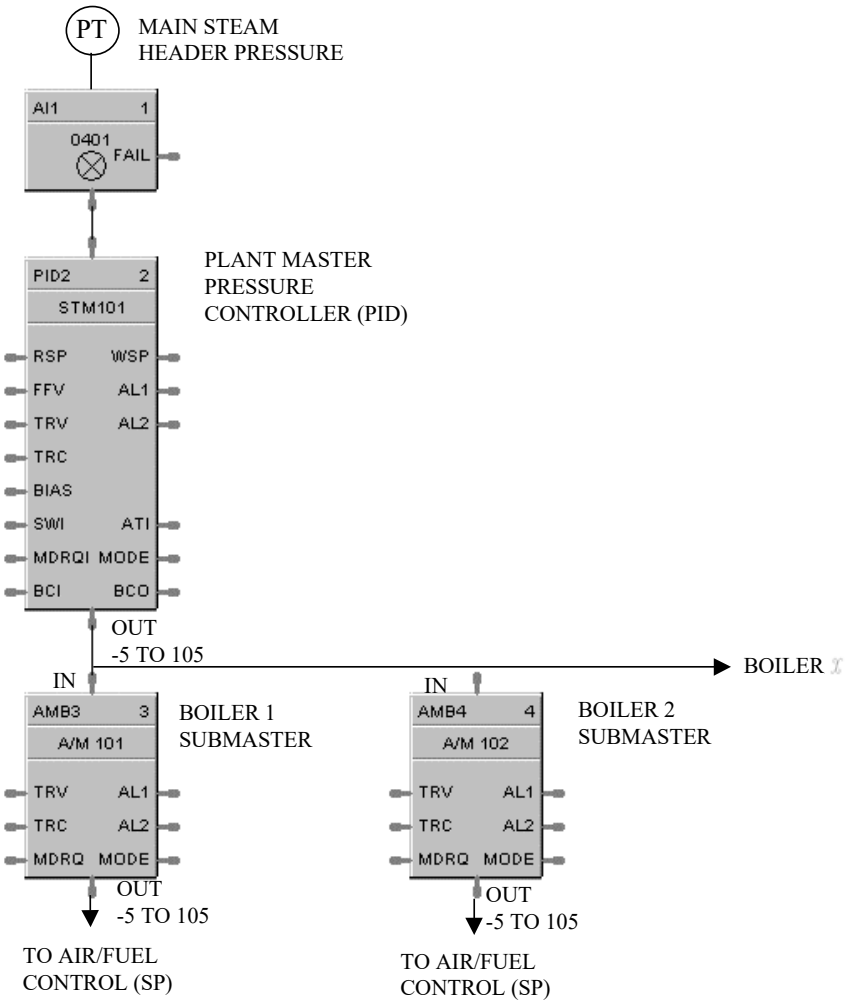

Figure 14 AMB function block example

AMB Block (Boiler Submaster):
Operators place AMB Block to “MAN” mode to adjust fuel setpoints up or down independent of each boiler.

AMB: OUT = IN + BIAS **MAN MODE** Bias is automatically calculated as operator increment or decrement out value. Bias = OUT – IN

AUTO MODE Bias is a fixed value from the man mode calculation. Above OUT = IN + Bias

ANAIMP Safety Analog Import Function Block

Description

The **ANAIMP** label is short-hand for the **Safety Analog Import** block.

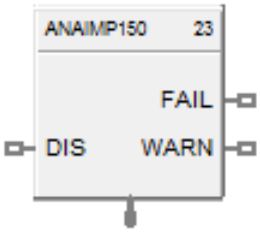

This block belongs to the Communications category and is only available on SIL devices, such as C30S, C50S, C70S, and C75S from version 6.300 or above.

Function

The Safety Analog Import block is a communication block that allows a configuration to import selected analog signals from other configurations. These signals are exported within an XML file generated by selecting the "Safety Peer Export Enable" option within the Signal Dialog, and then saving the configuration. The XML is saved with the configuration filename, with the '.xml' file extension. With this block, a user is able to share analog signals between multiple configurations. The Safety Analog Import has two outputs; FAIL and WARN, that are used to share whether or not the imported signals are still valid and to tell if they are within range. The Safety Analog Import block allows the user to set a URV and an LRV, as well as a Failsafe Option for "Use Value" or to "HOLD" current value.

Similar to how a 'Connector' functions, the user cannot import a 'Process' signal (non-highlighted signal) into 'Safety' worksheet. The user is able to import a 'Safety' signal (yellow highlighted) into a 'Process' sheet however.

Inputs

DIS – DIS is the Disable pin that disables the analog signal import updates between the two controllers. Attaching a 'high' signal to disable sends all signals imported from that controller into failsafe. Attaching the NO_SCAN pin of the corresponding SAFPDE block will associates the failsafe timeout action configured in the SAFPDE block to the ANAIMP block.

Outputs

FAIL – Failsafe pin to signal that the data has reached its stale limit

WARN – this pin indicates when the value is out of range (Safety Analog Import only)

Block Properties

After adding a Safety Analog Import block, opening the properties will prompt the user to select a '.xml' file from a previously saved configuration with which to import an analog signal from.

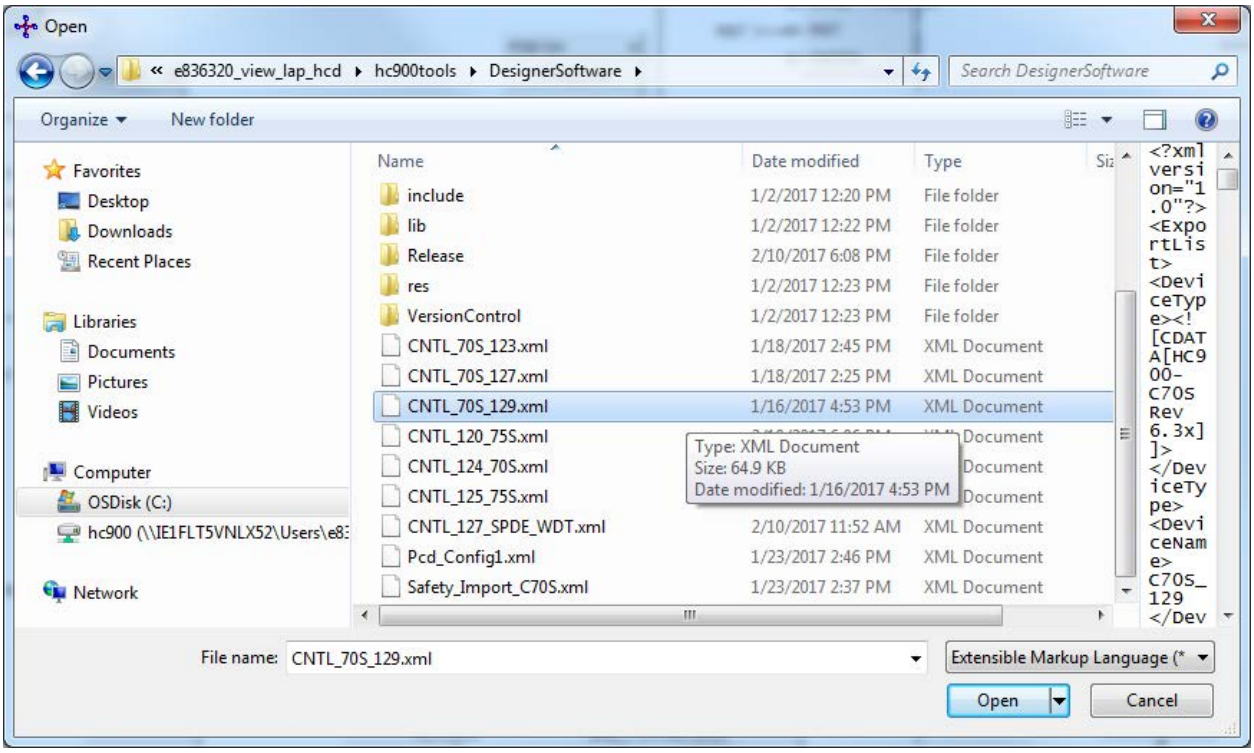

The above image shows several XML files that are automatically generated after saving a configuration.

After selecting the '.xml' file, the following screen is shown to allow the user to select the analog signal to import:

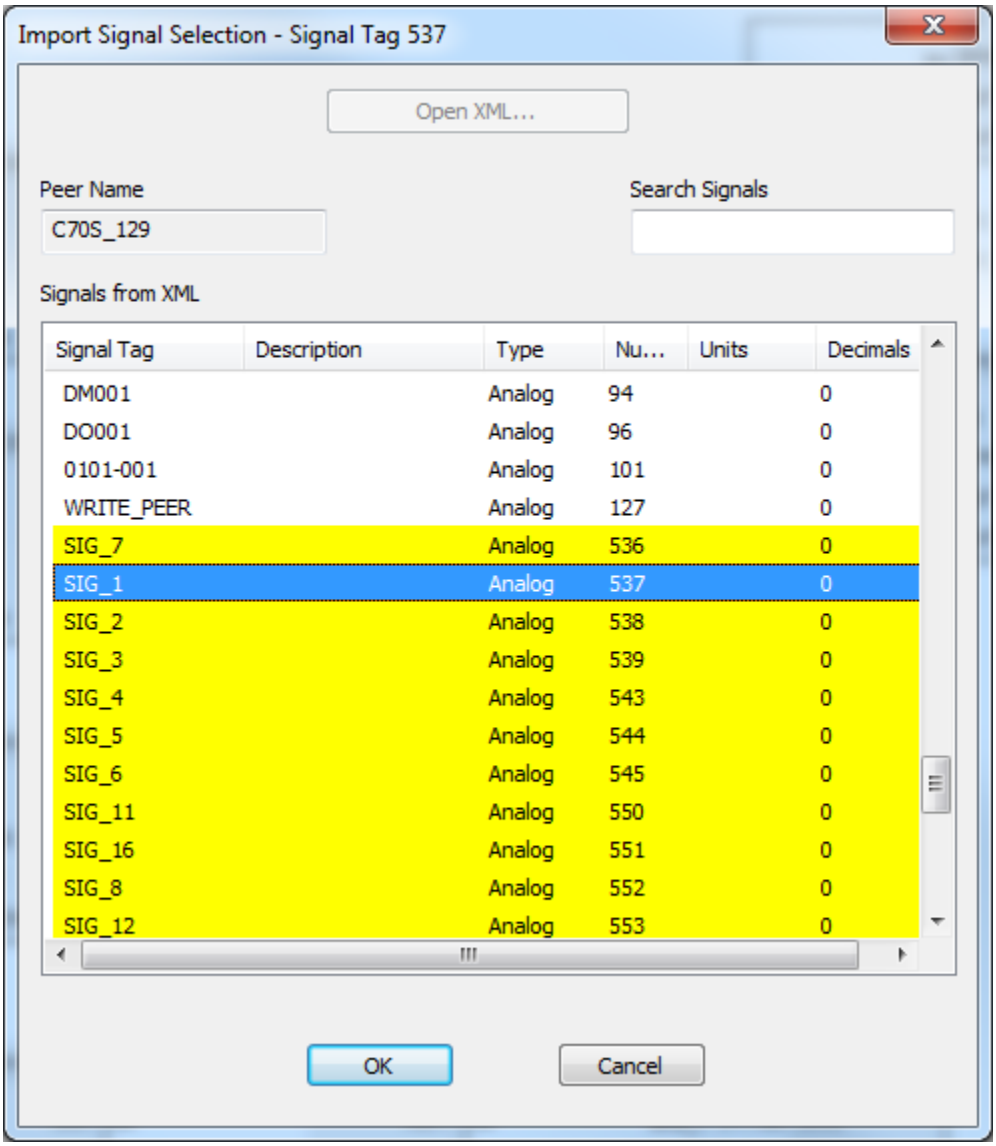

The Safety Analog Import have a ‘Signal Tag’, ‘Description’, ‘Type’, external signal ‘Number’, ‘Units’ and ‘Decimals’.

Once a signal is selected, and ‘OK’ is pressed, the block will hold the information from the previous dialog, as shown below:

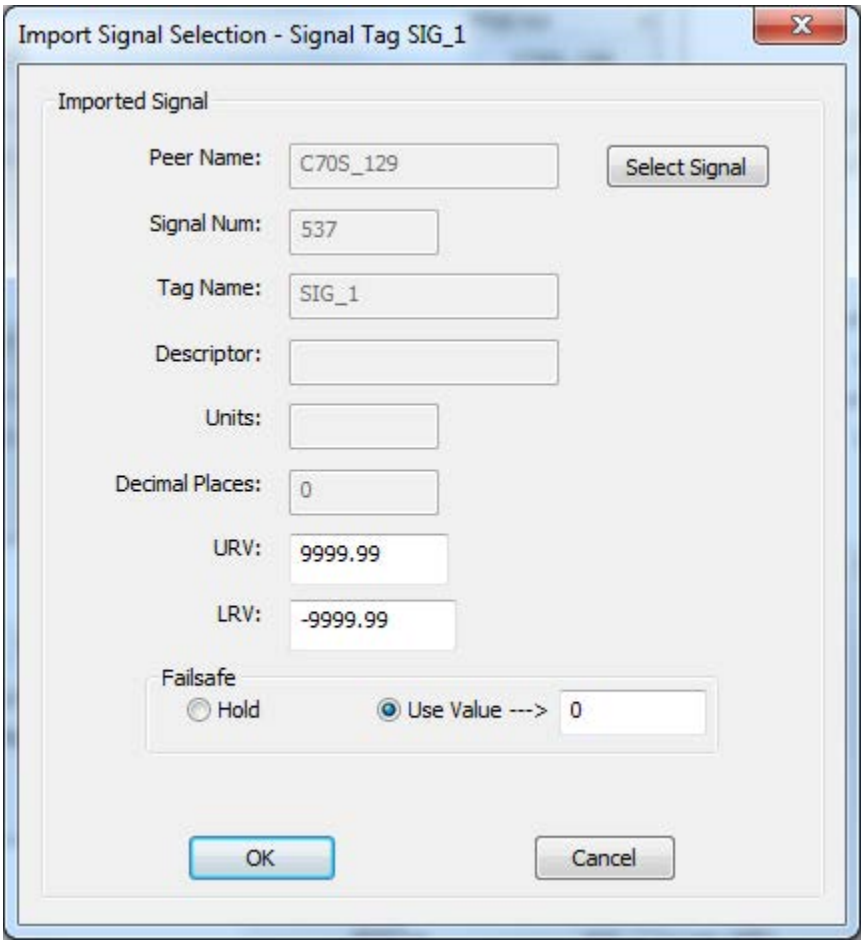

The Analog Import block now configured.

Configuration Parameters

In the properties page, the user is able to configure the URV and LRV for the block, as well as the Failsafe option. The Safety Analog Import block allows either the last known good value to be held, or will output a pre-selected value if 'Use Value->' is chosen.

Parameter	Index #	Parameter Description	Value Or Selection	Default
URV	N/A	Upper range value	-99999 to 99999	9999.99
LRV	N/A	Lower range value	-99999 to 99999	-9999.99
Failsafe	N/A	Action to be taken when the block goes to fail. Hold – output will hold to last good value Use Value – output will go to this specified value	Click on radio button to select Any float 32 bit value	Use Value = 0

Related Function Blocks

SAFPDE – Safety Peer Monitor block

2AND Function Block

Description

The 2AND label stands for the AND Boolean function (2 Inputs).

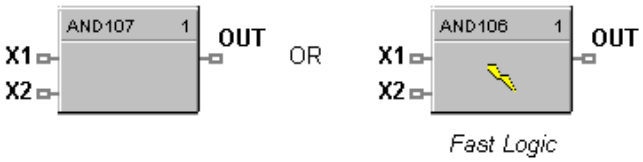

This block is part of the *Logic* and *Fast Logic* categories.

Function

Turns digital output (OUT) **ON** when inputs X1 and X2 are **ON**. Thus,

- If *all* inputs are ON, then: **OUT = ON.**
- If *any* input is OFF, then: **OUT = OFF.**

Input

X1 = First digital signal.

X2 = Second digital signal.

Output

OUT = Digital signal controlled by status of input signals.

Block properties

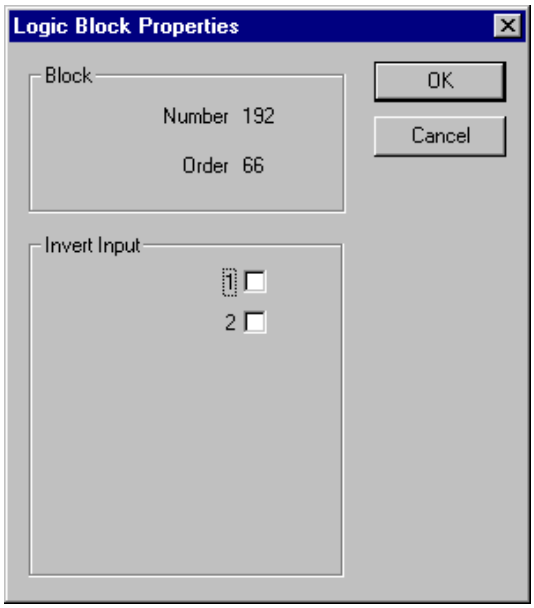

Input state

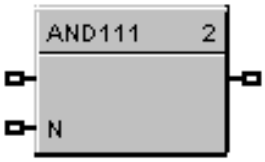

You can invert Input 1 or Input 2 or both. If the input is inverted, an input line that is ON is seen as OFF (“N” on Icon next to inverted input).

Example

Figure 15 shows an AND function block being used to monitor two input signals for an alarm condition.

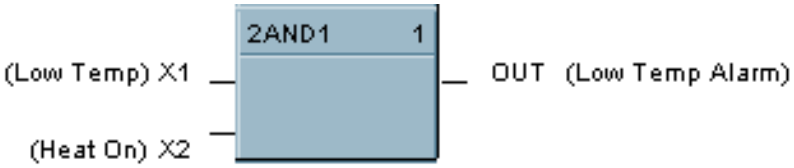

Figure 15 2AND function block example

4ALM Function Block

Description

The 4ALM label stands for the 4 Alarm with Hysteresis.

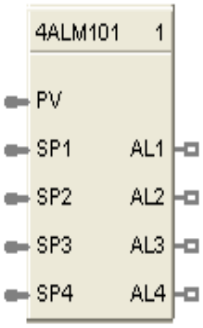

This block is part of the *Alarm/Monitor Blocks* category.

Function

This block monitors four analog input values (SP1, SP2, SP3, SP4) and performs up to four alarm comparisons against the PV input. Configurable Alarm types are Disabled, Low, High. The associated output pins, AL1 through AL4, will turn ON if the configured HIGH or LOW alarm condition is present. The individual hysteresis settings for each alarm are used to prevent output cycling.

Inputs

PV = Process variable

SP1 = Analog value

SP2 = Analog value

SP3 = Analog value

SP4 = Analog value

Outputs

AL1 = Alarm output

AL2 = Alarm output

AL3 = Alarm output

AL4 = Alarm output

Configurable parameters

Parameter	Index #	Parameter Description	Value or Selection
Block Order	N/A	Execution Order for Block	Read Only. To change block order, right-click on a Function Block and select Execution Order.
Tag Name	n/a	32-characters unique tag name (ASCII characters only)	Up to 32-characters
Descriptor	n/a	Block description	Up to 32-characters
Alarm type	0-3	Alarm type	Disabled, Low, High
Hysteresis	4-7	Adjustable overlap of the on/off states of the output.	0 to the span of the input in engineering units.

Example

Use the Four Alarm function block to configure up to four alarm setpoints (Low/Low, Low -- High, High/High) for a single input signal.

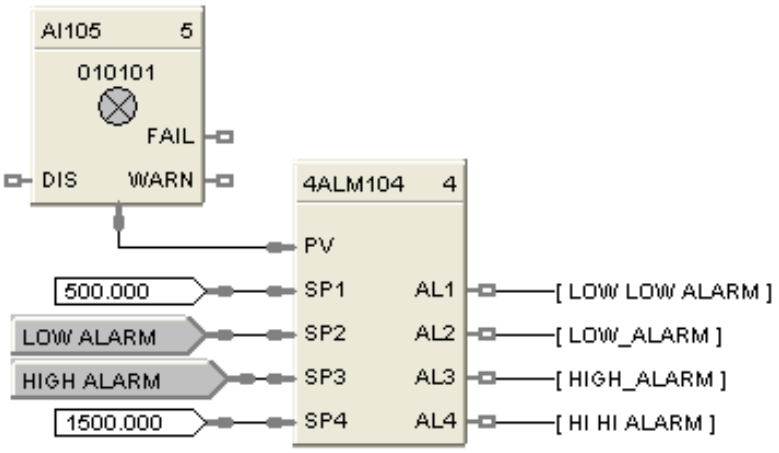

Figure 16 4ALM function block example

4AND Function Block

Description

The 4AND label stands for the AND Boolean function (4 Inputs).

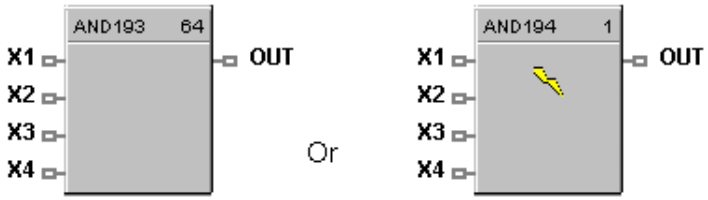

This block is part of the *Logic* and *Fast Logic* categories.

Function

Turns digital output (OUT) **ON** when inputs X1 through X4 are **ON**. Thus,

- If all inputs are ON, then: **OUT = ON.**
- If any input is OFF, then: **OUT = OFF.**

Input

X1 = First digital signal
X2 = Second digital signal
X3 = Third digital signal
X4 = Fourth digital signal

ATTENTION

Unused values must be set to 1 or inverted.

Output

OUT = Digital signal controlled by status of input signals

Block properties

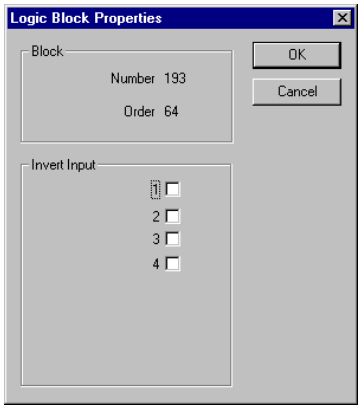

Double click on the function block to access the function block properties dialog box.

Input state

You can invert Input 1, 2, 3, 4, or all. If the input is inverted, an input line that is ON is seen as OFF ("N" on Icon next to inverted input).

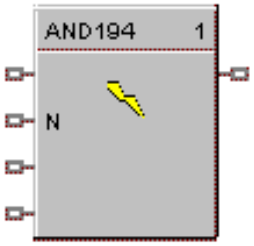

ATTENTION

Unused values must be set to 1 or inverted.

Example

Figure 17 shows a Function Block Diagram configuration using a 4AND function block. The function block is being used to monitor 3 input signals for an alarm condition. Note unused input is terminated.

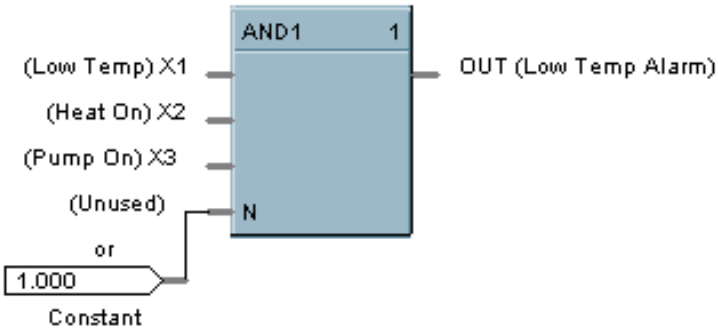

Figure 17 4AND function block example

8AND Function Block

Description

The 8AND label stands for the AND Boolean function (8 Inputs).

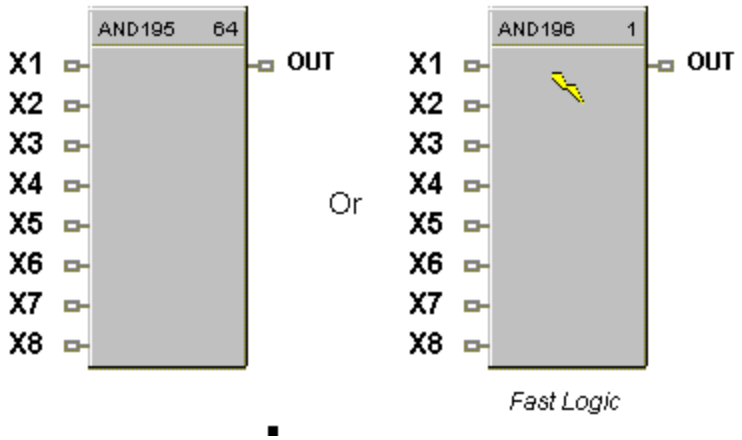

This block is part of the *Logic* and *Fast Logic* categories.

Function

Turns digital output (OUT) **ON** when inputs X1 through X8 are **ON**. Thus,

- If *all* inputs are ON, then: **OUT = ON.**
- If *any* input is OFF, then: **OUT = OFF.**

Input

X1 = First digital signal
X2 = Second digital signal
X3 = Third digital signal
X4 = Fourth digital signal
X5 = Fifth digital signal
X6 = Sixth digital signal
X7 = Seventh digital signal
X8 = Eighth digital signal

ATTENTION

Unused values must be set to 1 or inverted.

Output

OUT = Digital signal controlled by status of input signals.

Block properties

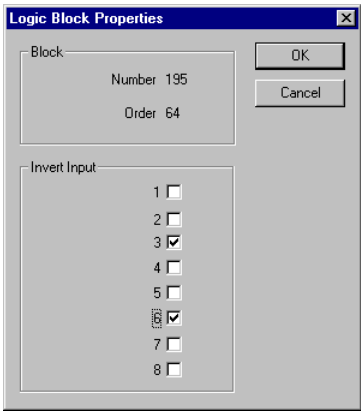

Double click on the function block to access the function block properties dialog box.

Input state

You can invert Input 1, 2, 3, 4, 5, 6, 7, 8 or all. If the input is inverted, an input line that is ON is seen as OFF (“N” on diagram next to inverted input).

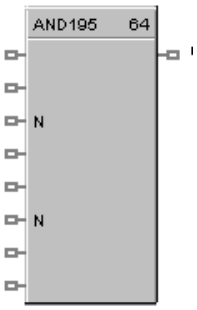

ATTENTION

Unused values must be set to 1 or inverted.

Example

Figure 18 shows a Function Block Diagram configuration using a 8AND function block. The function block is used in a startup sequence to enable heaters when 6 input conditions are true.

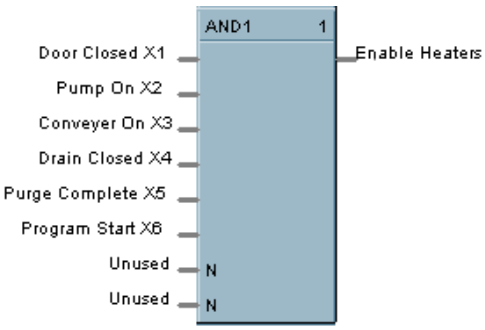

Figure 18 8AND function block example

AO Function Block

Description

The **AO** label stands for a milliamp **Analog Output**.

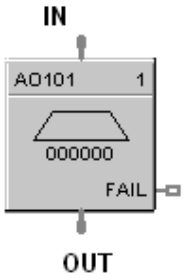

This block is part of the *I/O Blocks* category.

Function

Range High and Range Low are used to specify the Engineering Unit values for 100 % and 0 % of this block's input span. For reverse outputs, Range High may be set to a value less than Range Low.

The output range high and range low values (0-20 maximum) set the milliamp output values that correspond to the 0 % to 100 % span limits of the inputs.

Input

IN = Analog value

Output

OUT = Converted value sent to specified real I/O address.

FAIL = Failed Output indication - Module Error. 8 and 16 channel analog outputs require loop power open for loop detection.

Block properties

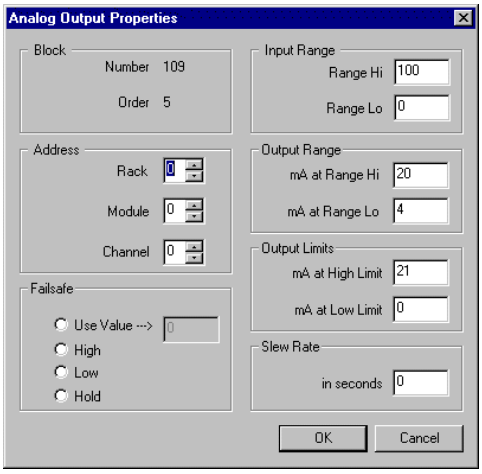

Double click on the function block to access the function block properties dialog box.

Configuration parameters

AO's Address starts at Module 4.

Table 23 Analog output configuration parameters

Properties Group	Parameter	Index #	Parameter Description	Value or Selection
Block	**Order**	N/A	Execution Order for Block	Read Only. To change block order, right-click on a Function Block and select Execution Order.
Address	**Rack**		This is the address of the selected Rack.	Enter a value from 1 to 5.
	I/O Module		Address of selected I/O module	Enter a value: from 1 to 12
	Channel		Channel on selected I/O Module	Enter a value: from 1 to 16
Range	**Range Hi**	1	High Range Value Engineering Unit - value of input that corresponds to 100 % output value	-99999 to 99999 Default = 100
	Range Low	2	Low Range Value Engineering Unit - value of input that corresponds to 0 % output value	-99999 to 99999 Default = 0.0
Output	**mA at range High**	3	Value of mA output that corresponds to 100 % output signal (for example: 20 mA)	0 to 20 Default = 20
	mA at Low Range	4	Value of mA output that corresponds to 0 % output signal (for example: 4 mA)	0 to 20 Default = 4
Output Limits	**mA at range High Limit**	N/A	Value of mA that you want to set the High Range Limit	0 to 21 Default = 21
	mA at Low Range Limit	N/A	Value of mA that you want to set the Low Range Limit	0 to 21 Default = 0
Failsafe	**Failsafe Value**	N/A	Failsafe Value	0 to 21 mA Default = 0
	Failsafe Type	8	Type of Failsafe	**High -** sets the output of the block to High Output Range limit when failure is detected **Low** - sets the output of the block to Low Output Range Limit when failure is detected **Hold** - hold the output at the last value just prior to the failure being detected
Slew Rate	**Slew Time in seconds**	9	Slew Rate is the maximum rate of change required to drive the output from full OFF (0% - typically 4 mA) to full ON (100% - typically 20mA). The block will convert this to a maximum change of the milliamp output per execution cycle of the block.	Enter a value of from 0.0 to 99

Example

Figure 19 shows a Function Block Diagram configuration using an AO function block to retransmit an analog input value. In example A, the output is from a SPP block to an external controller via the AO block. In example B, the mA output is 4 mA for an analog input of 2000.

ATTENTION

Reverse scaling is required for duplex control outputs.

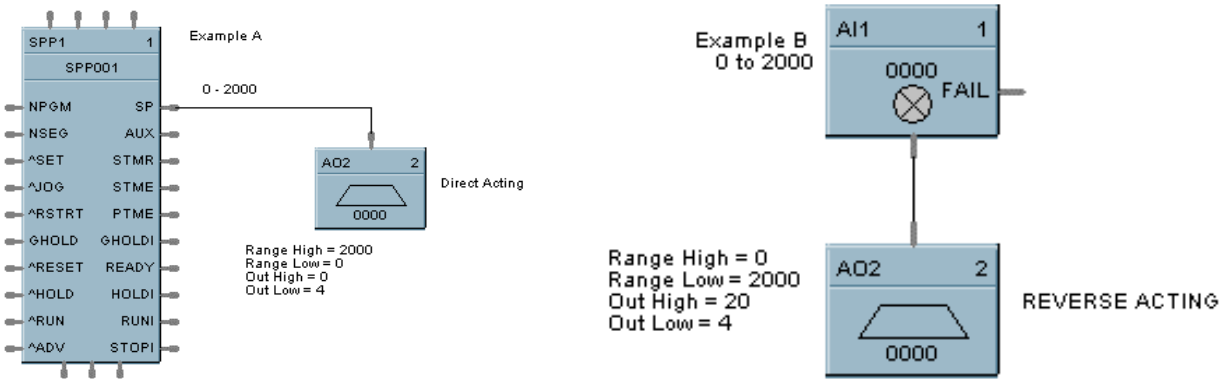

Figure 19 AO function block example

Analog Output Validated

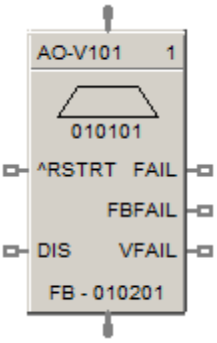

Description

The **AO-V** label stands for **Analog Output Validated** . This block is part of the *I/O Blocks* category.

Function

Provides an analog output from the algorithms and functions to physical analog output hardware. The analog status is fed back to AI feedback channel for validation. Each AO-V block and feedback AI requires a module and channel number during configuration.

NOTE: For calibration of AI channel, please follow following steps

1. Create a configuration using AO-V function block and configure the address of feedback input same as the AI channel which is to be calibrated.

2. Download the configuration to controller.

3. Now follow the steps given "*Calibrate AI Channel* " section.

Input

X = Input Analog Signal

^RSTRT = Restart Signal – When used, a positive (rising) input pulse releases OUT from its failsafe value and FAIL pin from its ON state. If ^RSTRT pin is left unconnected, the function block's OUT and FAIL pins will not latch the status. This allows for the replacement or repair of the failed AO module or failure condition and operator controlled release.

DIS = Disable Signal – When used and made ON, disables the AO Channel and also results in disabling of ^RSTRT functionality. If DIS pin left unconnected or made OFF, results in Normal Operation i.e. it enables the function block.

Output

OUT = Physical output value of function block

FAIL = Failed Output Indication – AO module has an error. OUT is set to failsafe (0 - for safety worksheet and option-selectable for process worksheet).

FBFAIL = Feedback Fail – Feedback AI module fail. OUT continues to function without feedback validation.

VFAIL = Validation Fail – Input does not match output status i.e. the value read does not equal the value written. The percent deviation allowed from input to output is +/- 3% i.e. if the input to output is outside of +/- 3 %, VFAIL will be ON. Please note that percent deviation is calculated based out of output range. If AI module has an error, VFAIL will stay OFF. OUT continues to function without feedback validation.

Block properties

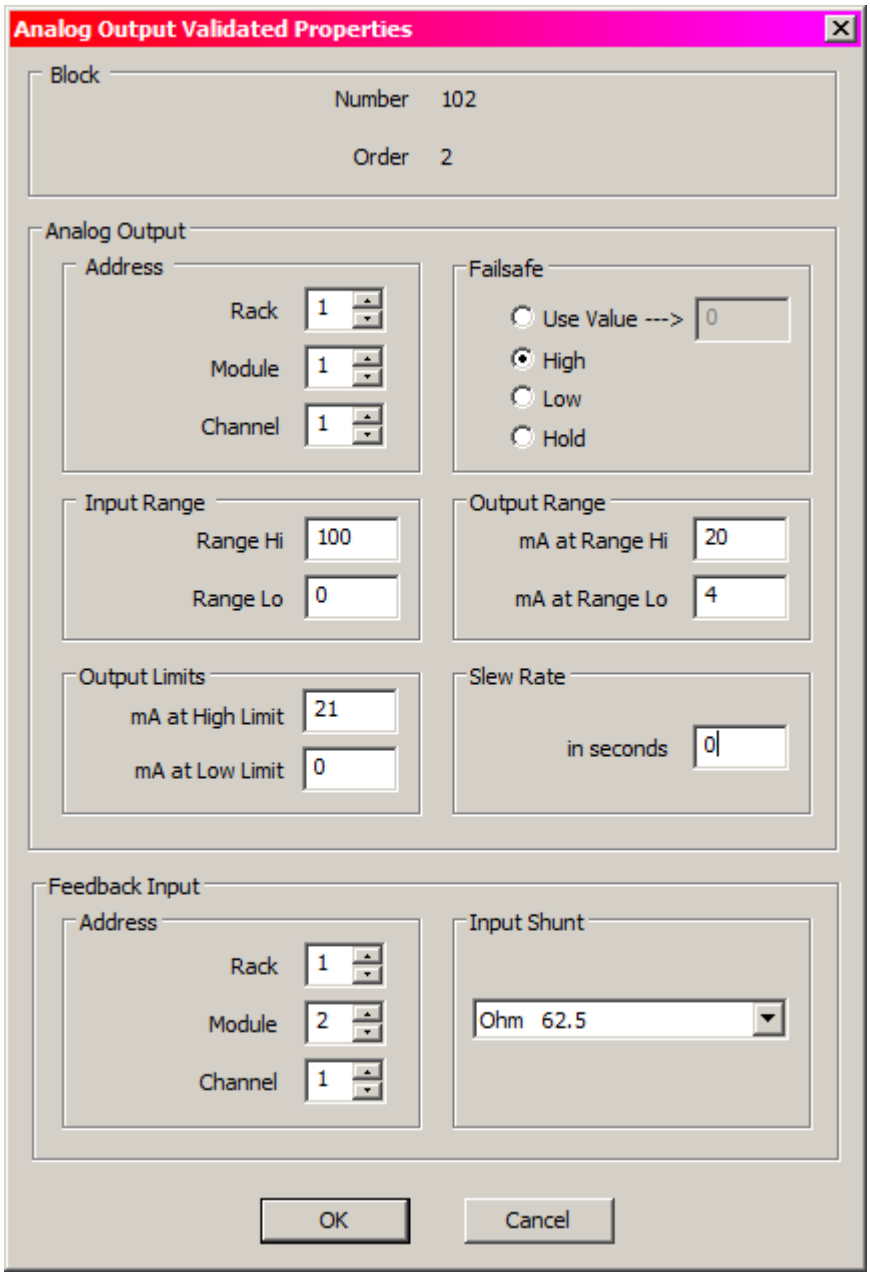

Double click on the function block to access the function block properties dialog box

Configuration parameters

Analog output validated configuration parameters

Properties Group	Parameter	Index #	Parameter Description	Value or Selection
Address	Rack	N/A	Rack address of selected DO module	From 1 to 12
	I/O Module		Address of selected DO module	From 1 to 12
	Channel		Channel number on selected DO module	From 1 to 32, depending on the physical module type – DC or AC or Relay
Input Range	Range High	1	High Range Value Engineering Unit - value of input that corresponds to 100 % output value	99999 to 99999 Default = 100
	Range Low	2	Low Range Value Engineering Unit - value of input that corresponds to 0 % output value	99999 to 99999 Default = 0.0
Output Range	mA at range High	3	Value of mA output that corresponds to 100 % output signal (for example: 20 mA)	0 to 20 Default = 20
	mA at Range Low	4	Value of mA output that corresponds to 0 % output signal (for example: 4 mA)	0 to 21 Default = 21
Output Limits	mA at High Limit	N/A	Value of mA that you want to set the High Range Limit	0 to 20 Default = 20
	mA at Low Limit	N/A	Value of mA that you want to set the Low Range Limit	0 to 21 Default = 21

Failsafe	Value	N/A	USE VALUE sets the output to the programmed value when failure is detected.	0 to 21 mA Default = 0
	Failsafe Type	N/A	Type of Failsafe	High - sets the output of the block to the High Output Range Value when failure is detected Low - sets the output of the block to the Low Output Range Value when failure is detected Hold - maintains the last value of the block just prior to the failure being detected
Slew Rate	Slew Rate in Seconds	9	Slew Rate is the maximum rate of change required to drive the output from full OFF (0% - typically 4 mA) to full ON (100% - typically 20mA). The block will convert this to a maximum change of the milliamp output per execution cycle of the block.	0.0 to 99
Address	Rack	N/A	Rack address of selected feedback AI module	From 1 to 12
	I/O Module		Address of the selected feedback AI module	From 1 to 12
	Channel		Channel number on the selected feedback AI module	From 1 to 32
Input Shunt	Input Shunt in Ohms	N/A	Value of input shunt	62.5 Ω 100 Ω 250 Ω 500 Ω

Example

Figure below shows a function block diagram using a AO-V function block. An analog output signal from PID block will control the analog output for AO-V block output for monitoring. The feedback fail (FBFAIL) and validation fail (VFAIL) are also used for monitoring the statuses. The connection to “RSTRT” pin ensures that the status on OUT and FAIL pins will remain latched, until a positive (rising) edge is detected on “RSTRT” pin.

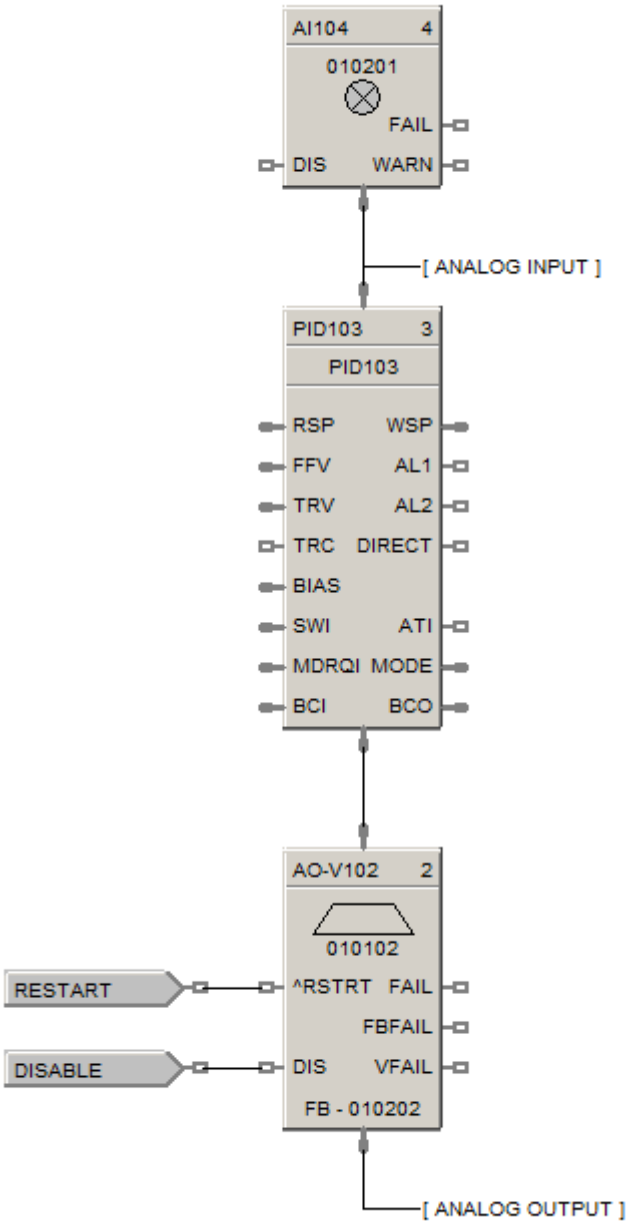

ASYS Analog System Status Function Block

Description

The **ASYS** label stands for **Analog System Status**. This block is part of the Alarm/Monitor Blocks category.

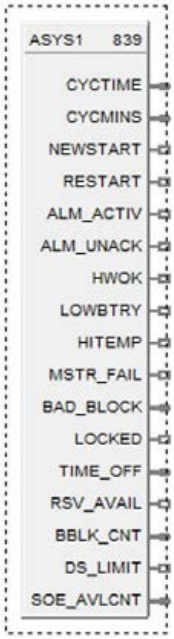

Function

This function block provides read access to controller status values including those related to the **Normal Scan** execution cycle. (To access status values associated with the Fast Scan execution cycle see the FSYS function block.) The outputs may be connected to the function block inputs. The outputs may also be connected to signal tags for operator interface monitoring. The Analog System Status block is assigned **block number 1**.

Versions

The status information available to be monitored for the analog system depends on both the controller type and the revision of software executing on the controller. As a result, there are different versions of the ASYS block and when you drag and drop this block onto a configuration worksheet the graphic may look a little different than the one shown above. The Process Control Designer will automatically select the correct version of the block based on the controller type and software revision selected for each configuration file.

The graphic shown above is for the most advanced version of the block and earlier versions may have fewer outputs, different output types and/or different output ordering. Where applicable, the differences are described in the table below for each output.

Restrictions

There can be only one instance of the ASYS function block within a configuration.

Output

Table 24 Analog system status block outputs

Output	Description
CYCTIME	Control Block Cycle Time in seconds.
CYCMINS	Control Block Cycle Time in minutes.
NEWSTART	ON for one full cycle of control block execution, following a new start of the system. For example: starting after a change from program to run.
RESTART	ON for one full cycle of control block execution, following power up. [Warm Start]
ALM_ACTIV	Alarm Active is ON if any operator panel alarm is ON.
ALM_UNACK	Alarm unacknowledged is ON if any operator panel's alarm is unacknowledged.
HWOK	Hardware OK is ON if there are no faults. HWOK is set to off when a Rack Monitor Block's RACK OK pin is off.
LOWBTRY	Low Battery is ON if the battery is low, Off when battery is good.
HITEMP	High CJ Temperature is ON if the CJ temperature is high on any rack.
MSTR_FAIL	Communications Failure is ON when Modbus host diagnostic is not good.
BAD_BLOCK	Provides an indication of whether or not there are any blocks in the normal scan execution that are not operating properly. Any function block monitor window which indicates a block status other than "OK" is considered a Bad Block. For example: forced outputs (analog or digital), math errors (divide by zero), un-configured I/O blocks (rack/slot/channel) and PID blocks with a PV over/under the configured range limits. The level of indication provided depends on the software revision: **Revision 6.0:** This pin is an analog output which provides the block number of the first bad block in the normal scan configuration. Refer also to the BBLK_CNT output below. **Revision 4.402 and earlier:** This pin is a digital output which provides simple ON/OFF indication of at least one bad block in the normal scan execution logic. The BBLK_CNT output below does not exist in these versions.
LOCKED	Controller locked in current mode by switch position.
TIME OFF	Number of seconds that power was turned off. Valid for one cycle of control blocks execution following power up. Then it is cleared to zero.
RSV AVAIL	**Available for C75 and C75S redundant CPU controllers only**. ON when the Reserve CPU is available for failover. OFF when the Reserve CPU is unavailable for failover. On other controllers this pin may be missing or may be labeled as "N/A" and serves only as a placeholder, depending on the revision of the software.
BBLK_CNT	**Available in software revision 6.0 and higher.** The number of bad blocks present in the normal scan execution logic. Refer to the BAD_BLOCK output above for the definition of a bad block.
DS LIMIT	ON when the configured storage warning limit is exceeded. OFF when the storage capacity falls below the warning limit.
SOE_AVLCNT	5000 (Default)

Block Properties

To bring up the ASYS block properties window shown below, either double-click on the function block graphic or right-click on the function block graphic and select **Properties** from the context menu.

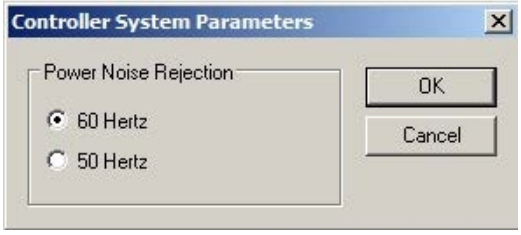

Configurable Parameters

The ASYS block has one configurable parameter that allows the input line voltage frequency to be set at either 50 or 60 Hz. The system uses this parameter to determine the integration times for analog to digital conversions. The correct integration time is needed to prevent aliasing the line frequency when converting low level signals such as those produced by thermocouples.

Use the radio buttons to select either 50 or 60 Hertz for the Power Noise Rejection property. In the United States, the line frequency is 60 Hertz. Click on the **OK** button to accept the new value.

Power Supply Diagnostic

For the C75 and C75S redundant CPU controllers only, when monitoring the ASYS block the "Monitor - ASYS1" window will contain a Power Supply Diagnostic variable in addition to the above outputs, as shown below. This variable indicates which rack, if any, has a power supply problem. See Rack Diagnostics Power Supply Diagnostics for more info.

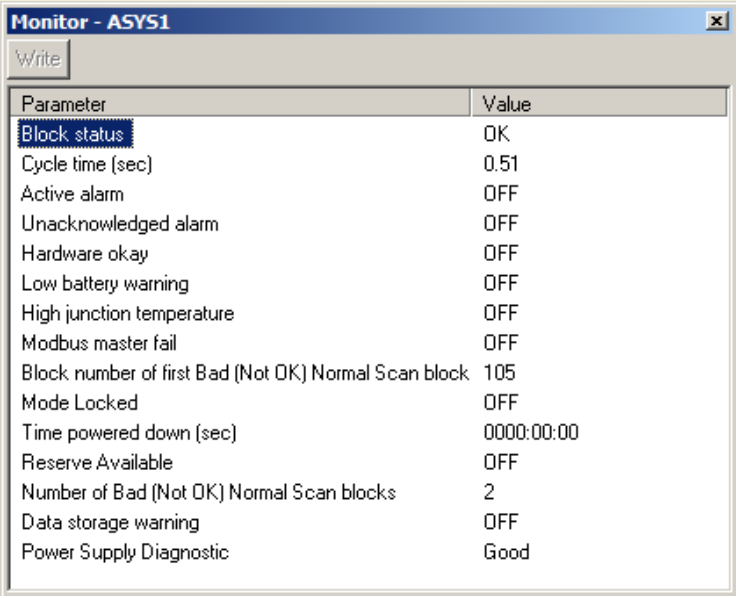

Parameter	Value
Block status	OK
Cycle time (sec)	0.51
Active alarm	OFF
Unacknowledged alarm	OFF
Hardware okay	OFF
Low battery warning	OFF
High junction temperature	OFF
Modbus master fail	OFF
Block number of first Bad (Not OK) Normal Scan block	105
Mode Locked	OFF
Time powered down (sec)	0000:00:00
Reserve Available	OFF
Number of Bad (Not OK) Normal Scan blocks	2
Data storage warning	OFF
Power Supply Diagnostic	Good

BCD Function Block

Description

The BCD label stands for Binary Coded Decimal Translator.

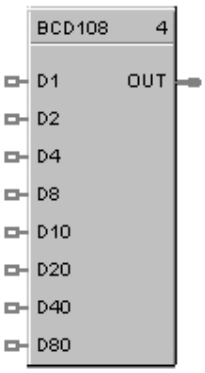

This block is part of the *Auxiliary* category.

Function

Accept up to 8 digital inputs in sequence and interprets the ON/OFF status of the first 4 inputs as a BCD value between 0 and 9 and the second 4 digits as a value between 10 and 80.

Input

D1 = Bit 0 of the BCD lower digit

D2 = Bit 1 of the BCD lower digit

D4 = Bit 2 of the BCD lower digit

D8 = Bit 3 of the BCD lower digit

D10 = Bit 0 of the BCD upper digit

D20 = Bit 1 of the BCD upper digit

D40 = Bit 2 of the BCD upper digit

D80 = Bit 3 of the BCD upper digit

Output

OUT = Analog output integer in the range of 0 to 99

OUT = (1* (1 if D1 is ON, else 0))+
(2* (1 if D2 is ON, else 0)) +
(4* (1 if D4 is ON, else 0)) +
(8* (1 if D8 is ON, else 0)) +
(10* (1 if D10 is ON, else 0)) +
(20* (1 if D20 is ON, else 0)) +
(40* (1 if D40 is ON, else 0)) +
(80* (1 if D80 is ON, else 0)))

Block properties

Double click on the function block to access the function block properties dialog box.

Example

Figure 20 shows a Function Block Diagram configuration using a BCD function block to select a Recipe.

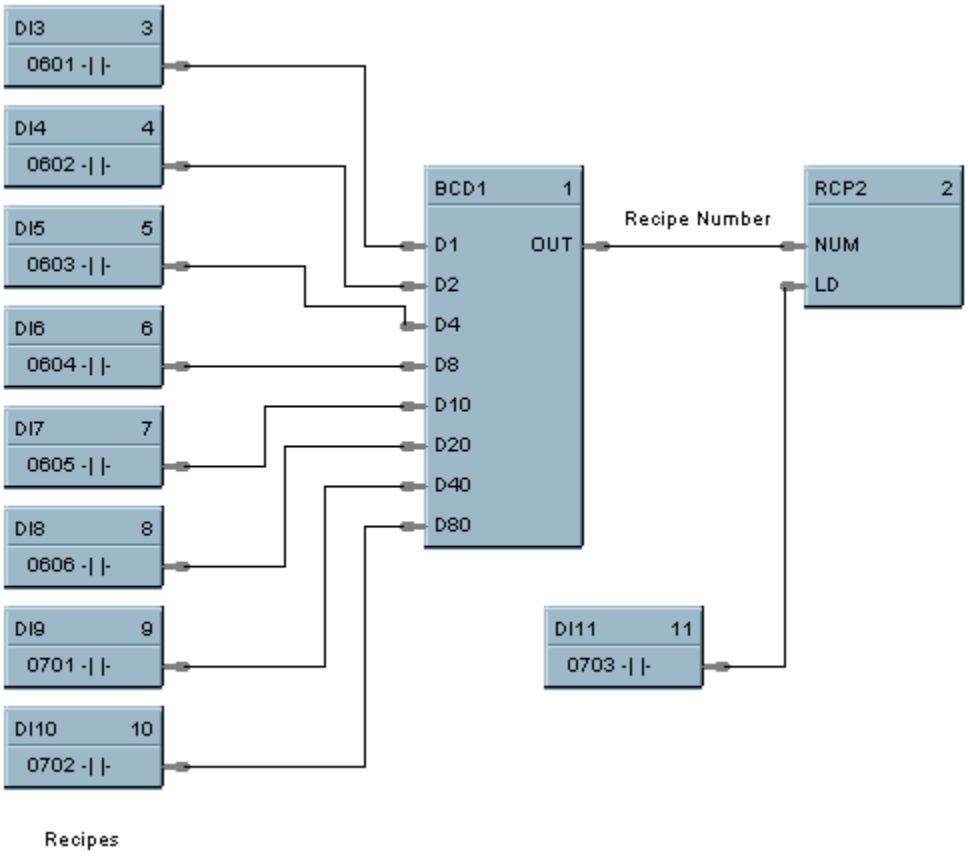

Figure 20 BCD function block example

BOOL Boolean Logic Function Block

Description

The **BOOL** label stands for **Free Form Logic.**

This block is part of the *Logic* category.

Function

Read digital inputs A through H and calculates the output based on specified Boolean logic function.

- Offers the following Boolean logic functions:

  AND entered as ∗
  OR entered as +
  NOT entered as not
  XOR entered as ^
  (- Left parenthesis
) - Right Parenthesis

Inputs

A = Block Input 1
B = Block Input 2
C = Block Input 3
D = Block Input 4
E = Block Input 5
F = Block Input 6
G = Block Input 7
H = Block Input 8

Output

ERR = error during execution of the equation. **Error = ON. No Error = OFF.**

OUT = Calculated Output (ON or OFF)

A maximum of 50 tokens per equation is allowed. A token is an operator, a variable, or a pair of parentheses.

TIP

- This function block consumes significantly more execution time than gate logic. Extensive use of this block in the fast logic scan can add significantly more time to the overall system cycle time.
- Use only the following list of words and characters in an equation:
  - AND - logical AND,
  - OR - logical OR,
  - NOT - unary NOT,
  - XOR - exclusive OR, or
  - "( )", "[ ]", and "{ }" parentheses - three types.
- A left parenthesis must have a matching right parenthesis.
- The matching parenthesis must be the same type, that is, "( )", "[ ]", or "{ }".
- Parentheses may be nested to any depth.
- Logicals AND, OR, and XOR must have a left and right operand.
- Unary NOT must have one operand to the right, and the operand must be enclosed in parentheses; for example, NOT(G).

  Examples: (A*B)+C,
  (A+notB+C)*notD

Block properties

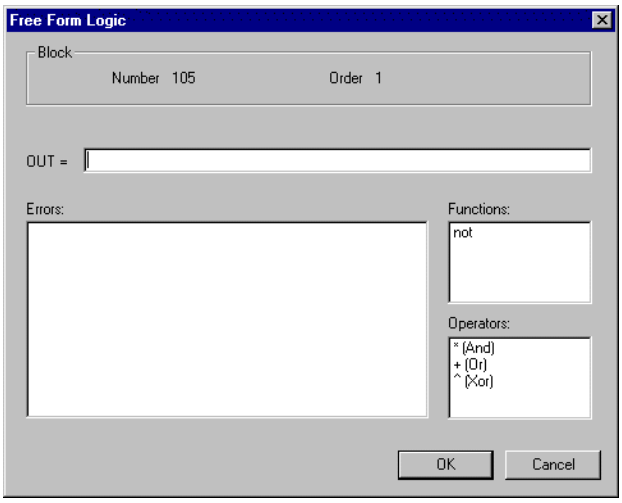

Double click on the function block to access the function block properties dialog box.

Configuration parameters

Table 25 BOOL function block configuration parameters

Properties Group	Parameter	Index #	Parameter Description	Value or Selection
Equations	**Equation Field**	N/A	Equation Field	Enter the desired equation in this field
Functions	**Logic Functions**	N/A	NOT	Double Click on a function to select from the list box
Operators	**Logic Operations**	N/A	* (AND) + (OR) ^ (XOR)	Double Click on an operation from the list box
Errors	**Error list**	N/A	List of equation errors	

Example

Rather than using individual logic function blocks, a boolean expression may be entered directly using the Free Form Logic block which accepts up to 8 inputs. This can save function blocks. The inputs may come from other blocks with discrete outputs, DI's, or digital signal tags. The example below is a direct entry of the Example 4 boolean expression, with the output connected to two DO's. The Free Form Logic popup dialog box is also shown indicating format for expression entry. Note that Input H is unused. You may use multiple levels of parenthesis to generate the boolean expression. There is no limit to the number of these blocks. This implementation uses 10 function blocks, saving 2 blocks vs. Example 4.

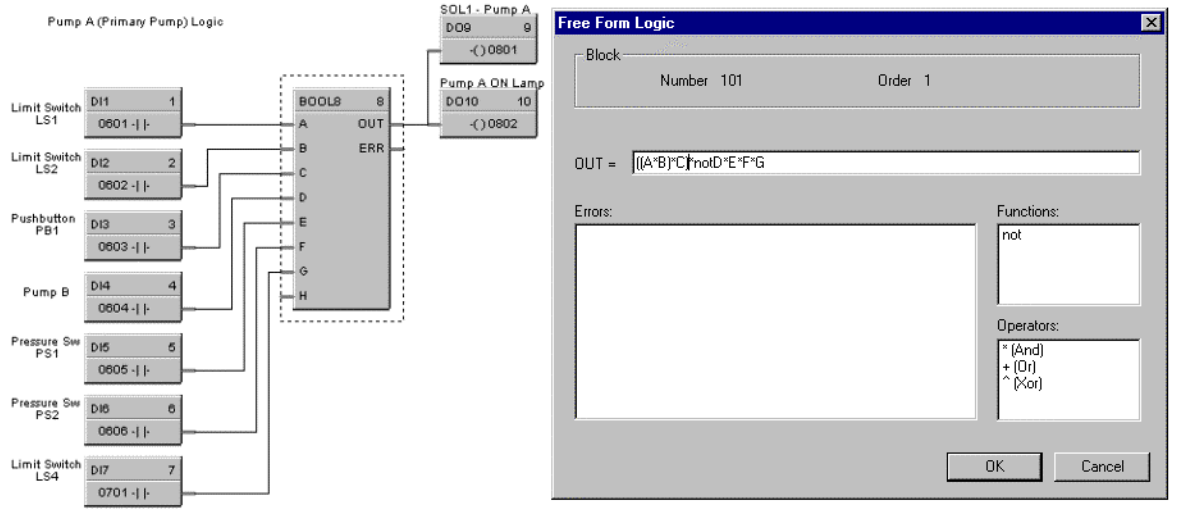

Figure 21 BOOL function block example

CASTA Configuration Access Status

Description

The CASTA label stands for Configuration Access Status Monitor. This block is part of the Alarm/Monitor Blocks category.

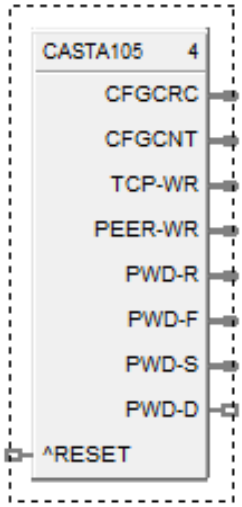

Function

This function block provides read access to configuration access status values including the configuration file CRC (Cyclic Redundancy Check).

Versions

The image shown above is for the first version of the block.

Restrictions

There can be only one instance of the CASTA function block within a configuration.

Output

Serial No.	Output	Description	Remarks
1	CFGCRC	This pin generates the CRC (Configuration Cyclic Redundancy Check) value of the downloaded configuration.	This value is zero for empty and invalid configuration
2	CFGCNT	This pin generates the number of times the configuration is downloaded to controller.	The maximum value is 4294967295. The value neither increments nor rolls back to zero after the maximum limit is reached.
3	TCP-WR	This pin generates the number of times the unauthorized (Not in TCP-MODBUS access control list) TCP write is requested.	The maximum value is 4294967295. The value neither increments nor rolls back to zero after the maximum limit is reached.

Serial No.	Output	Description	Remarks
4	PEER-WR	This pin generates the number of times the unauthorized (Not in PEER access control list) PEER write is requested.	The maximum value is 4294967295. The value neither increments nor rolls back to zero after the maximum limit is reached.
5	PWD-R	This pin generates the number of times the controller password is changed.	The maximum value is 4294967295. The value neither increments nor rolls back to zero after the maximum limit is reached.
6	PWD-F	This pin generates the number of times the controller password entries failed.	The maximum value is 4294967295. The value neither increments nor rolls back to zero after the maximum limit is reached.
7	PWD-S	This pin generates the number of times the controller password entries succeeded.	
8	PWD-D	This pin represents the password status (ON: Password enabled; OFF: Password disabled)	

Input

Input	Description	Remarks
RESET	This will reset all parameters of the function block when changed from logic "OFF" to "ON"	

Table 26 Pin details of CASTA function block

	HOT Start	Cold Start	Power Cycle (With Battery)	Power Cycle (W/O Battery)	Firmware download
CFGCNT	HOLD	HOLD	HOLD	RESET	RESET
TCP-WR	HOLD	RESET	RESET	RESET	RESET
PEER-WR	HOLD	RESET	RESET	RESET	RESET

	HOT Start	Cold Start	Power Cycle (With Battery)	Power Cycle (W/O Battery)	Firmware download
PWD-R	HOLD	HOLD	HOLD	RESET	RESET
PWD-F	HOLD	HOLD	HOLD	RESET	RESET
PWD-S	HOLD	HOLD	HOLD	RESET	RESET

Monitor of CASTA function block

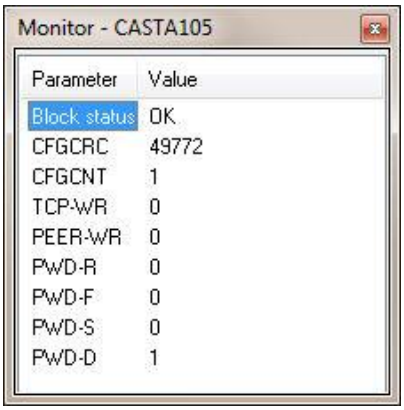

Block Properties

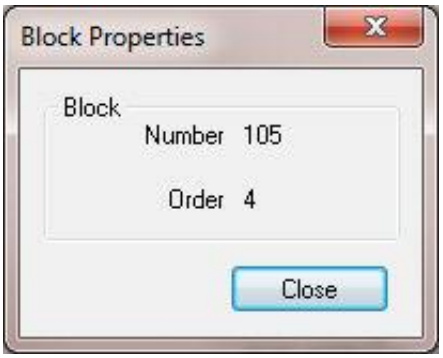

CALEVT Calendar Event Function Block

Description

The **CALEVT** label stands for **Calendar Event**.

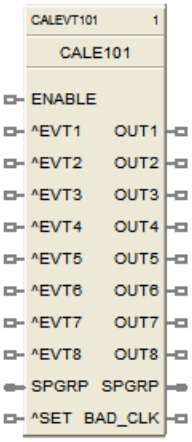

This block is part of the *Counters/Timers* category.

Function

The Calendar Event Block compares user-entered time-and-date setpoints to the real-time clock to generate digital Event outputs. These Event outputs can be integrated into a control strategy to activate time-synchronized activities. For example, the Event outputs can be used turn-on or turn-off the lights in an office building. Each Calendar Event block supports up to eight Event outputs.

In addition, the block allows you to configure up to five sets of time-and-date setpoints, called Setpoint Groups. These Setpoint Groups can be used to activate different sets of time-and-date setpoints to handle different conditions. Using the example of an office building, Setpoint Groups can be used to activate a different set of time-and-date setpoints for each season of the year (Spring, Summer, Fall, and Winter). Each Calendar Event block supports five Setpoint Groups.

The block also allows you to configure up to 16 Special Days. On these Special Days the Calendar Event Block will override its normal Event processing for a 24-hour period. For example, you can configure selected Event outputs to remain off on designated holidays.

Input

ENABLE = Enable; off = all event outputs (1-8) are off

^EVT1 = Event number 1 override input

^EVT2 = Event number 2 override input

^EVT3 = Event number 3 override input

^EVT4 = Event number 4 override input

^EVT5 = Event number 5 override input

^EVT6 = Event number 6 override input

^EVT7 = Event number 7 override input

^EVT8 = Event number 8 override input
^EVT1 thru ^EVT8 allows the user to activate the output pins OUT1 thru OUT8 of the function block based on a condition other than time. The output action would be a one-shot.

SPGRP = Value of Event Set point that is to be loaded {range 1 to 5} When SPGRP is connected to a variable, toggling the ^SET input is not required; the setpoint group is loaded automatically.

^SET = Loads the event set point group as indicated by the spgrp input signal.

SPGRP and ^SET input pins allow the user to activate one of five Setpoint Groups at any time. All the 8 events will be activated based on the settings in this Setpoint Group.

Output

OUT1 = Calendar timer event 1 output

OUT2 = Calendar timer event 2 output

OUT3 = Calendar timer event 3 output

OUT4 = Calendar timer event 4 output

OUT5 = Calendar timer event 5 output

OUT6 = Calendar timer event 6 output

OUT7 = Calendar timer event 7 output

OUT8 = Calendar timer event 8 output
Note: If the Event occurs when the Controller is OFF or not in RUN MODE, the event output will not turn ON until the event occurs again and the Controller is in RUN MODE

SPGRP = Value of Event Set point that was loaded {range 1 to 5} at the SPGRP input pin.

BAD_CLK = Bad clock; on when error in system time.

Configuration Parameters

The CALEVT properties dialog box is divided into 7 tab cards:

EVENT DETAILS
SPECIAL DAYS
EVENT SETPOINT 1
EVENT SETPOINT 2
EVENT SETPOINT 3
EVENT SETPOINT 4
EVENT SETPOINT 5

Click on the tab to access the properties for that tab.

EVENT DETAILS tab

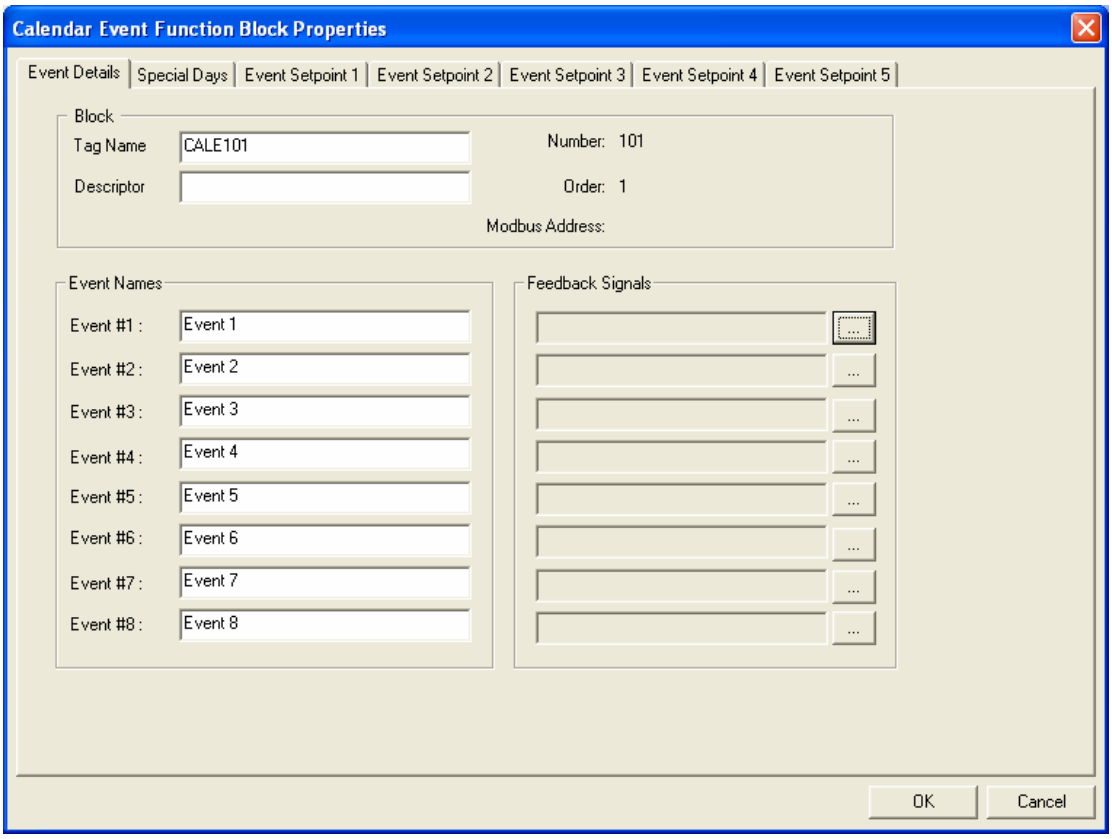

Table 27 Calendar Event Details tab configuration parameters

Properties Group	Parameter	Index #	Parameter Description	Value or Selection
Block	**Order**	N/A	Execution Order	Read Only. To change block order, right-click on a Function Block and select Execution Order.
	Tag Name		32-characters unique tag name (ASCII characters only)	Up to 32-characters
	Descriptor		Block Descriptor	Up to 32-characters
Event Names	**Event 1 thru Event 8**	N/A	Event Name	16 Characters Max (ASCII characters only).
Feedback Signals	**Feedback Signal Tags**	N/A	Feedback Signal tags for Event 1 thru Event 8	Press 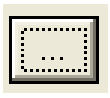 Select a signal tag from the list in the “Signal Tag “dialog Box.

SPECIAL DAYS tab

The Calendar Event Block can be configured to override its normal Event processing when any of the 16 Special Days occurs. This override will remain in effect for the 24-hour period associated with the Special Day. This feature can be used to force selected Event outputs to remain off on designated holidays, for example.

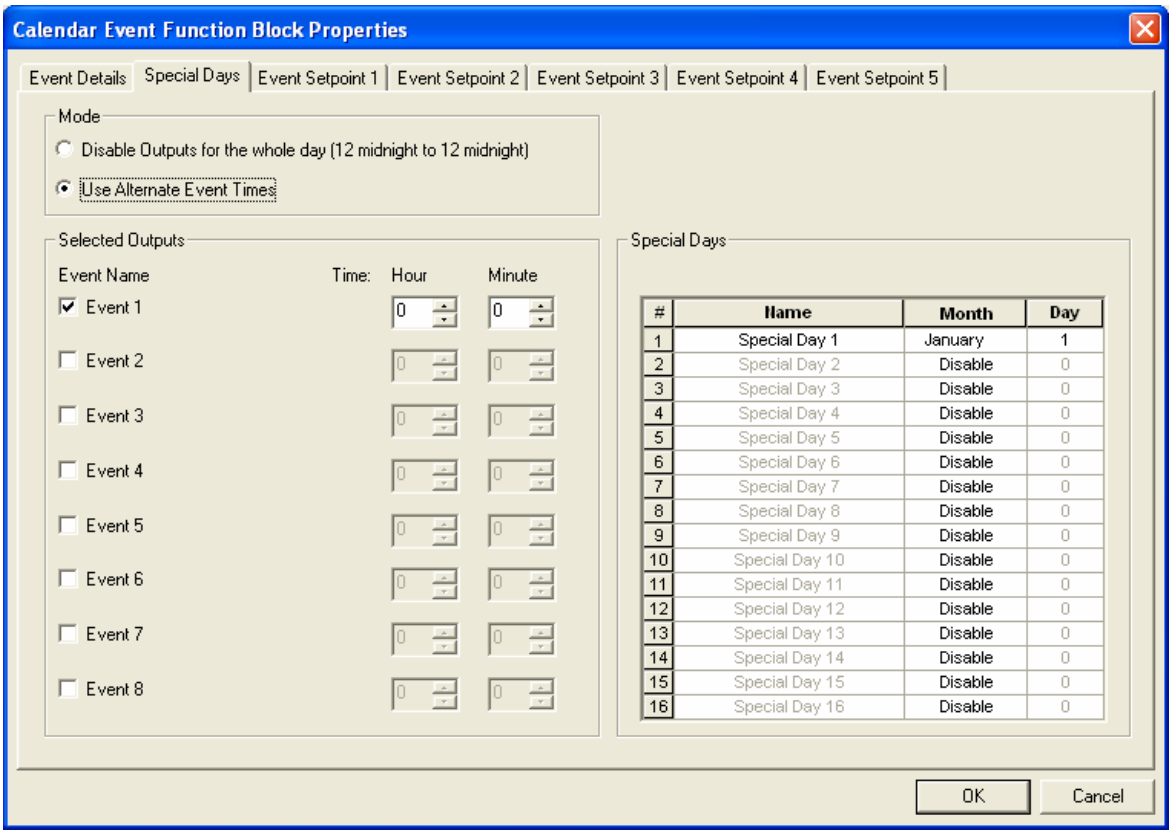

Table 28 Calendar Event Special Days tab configuration parameters

Properties Group	Parameter	Index #	Parameter Description	Value or Selection
Mode	**Disable Outputs for the whole day**	N/A	Disables the output from midnight to midnight and allows “Special Days” to be configured	Click Radio Button to select.
	Use Alternate Event Time	N/A	Allows alternate Daily setpoint (hour/minute)for designated outputs (1-8)	Click Radio Button to select.
Selected Outputs	**Event Name**	N/A	Name of event entered on the “Event Details” tab.	Click Box to select
	Time	N/A	Special Day - Alternate Hour of event	Active only if “Use Alternate Event Times” radio button is selected. Use Up/Down buttons to select hour Range 0 - 23
		N/A	Special Day - Alternate Minute of event	Active only if “Use Alternate Event Times” radio button is selected. Use Up/Down buttons to select minute Range 0 - 59
Special Days	**Name**	N/A	Up to 16 special days are available per block with a common set of unique conditions for these days. (same conditions for all special days) User selections for special days shall include: Disable outputs for the whole day Use alternate Daily setpoint for outputs (1-8)	Enter Name of the special Day 16 Characters Max (ASCII characters only).
	Month	N/A	Special Day - Month of the year; enumeration	Select Month from drop-down menu
	Day	N/A	Special Day - Day of the Month; range is 1 to 31.	Select Day from drop-down menu

EVENT SETPOINT 1 thru 5 tab

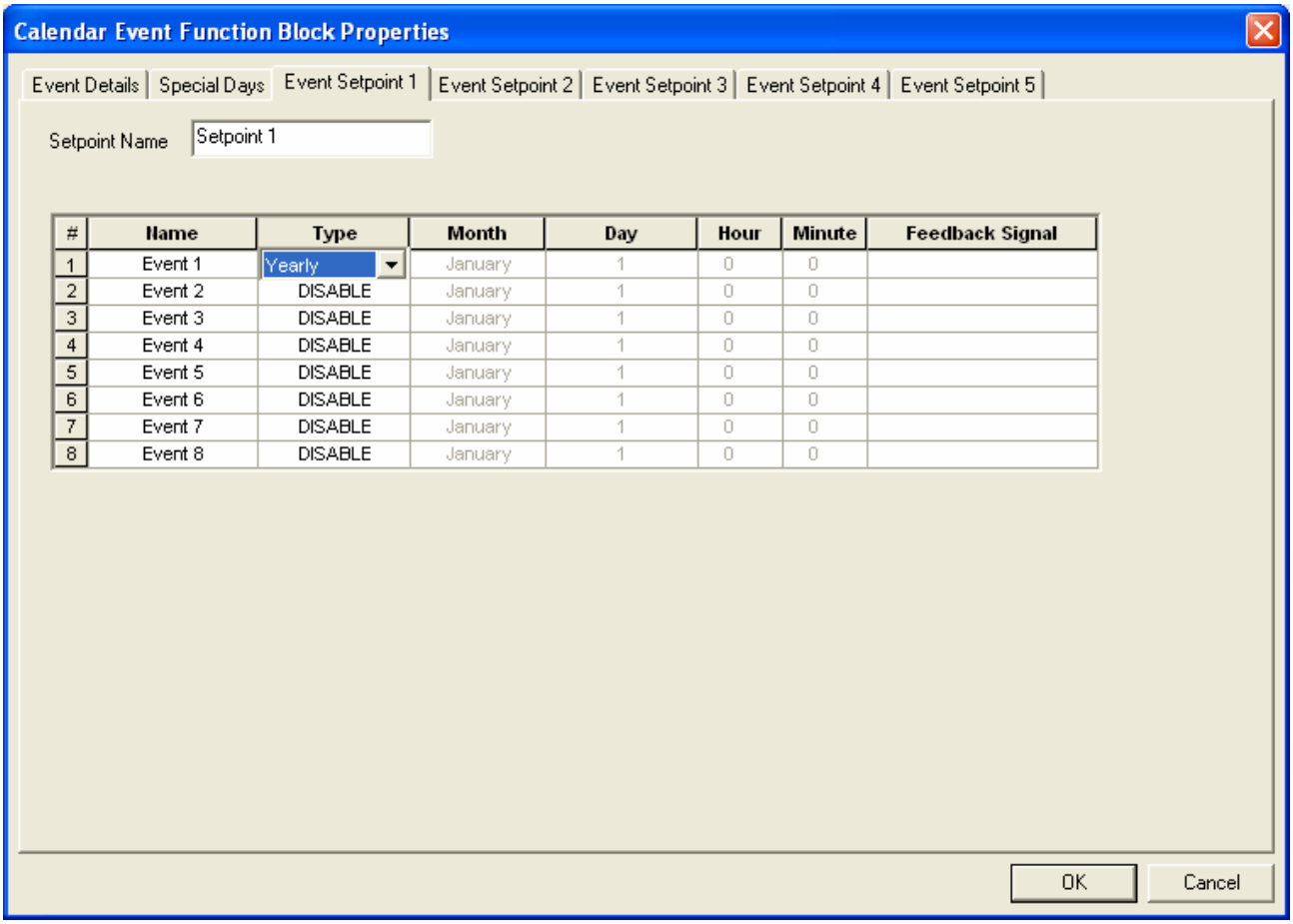

#	Name	Type	Month	Day	Hour	Minute	Feedback Signal
1	Event 1	Yearly	January	1	0	0	
2	Event 2	DISABLE	January	1	0	0	
3	Event 3	DISABLE	January	1	0	0	
4	Event 4	DISABLE	January	1	0	0	
5	Event 5	DISABLE	January	1	0	0	
6	Event 6	DISABLE	January	1	0	0	
7	Event 7	DISABLE	January	1	0	0	
8	Event 8	DISABLE	January	1	0	0	

Table 29 Calendar Event Setpoint tab configuration parameters

Properties Group	Parameter	Index #	Parameter Description	Value or Selection
Setpoint Name		N/A	Event Setpoint Name	16 Characters (ASCII characters only)
Type	**Type of Event**	N/A	Type of event can be configured for different periods, where the event repeats at every occurrence	**DISABLE** – Selected Event is Disabled **5 day week** – The configured event will occur at the same time Monday through Friday **7 day week** – The configured event will occur at the same time Sunday through Saturday **Day of week** – The configured event will occur once a week at the configured time **Monthly** – The configured event will occur once every month at configured date and time **Yearly** – The configured event will occur at the specific date and time
Month	**Month**	N/A	User is only prompted for “Month” when the event_type is set to “Yearly”	Months of the year
Day	**Day**	N/A	User is only prompted for “Day” when the event_type is set to “Yearly” or “Day_of_week” or “Monthly”	Day of the Month or Week When Event Type = YEARLY, or MONTHLY, range is 1 to 31 (based on max # of days for calendar month) When Event Type = Monthly, 31 means last day of month even for months with less than 31 days When Event Type = Day_of_Week, range is Sunday to Saturday.
Hour	Hour	N/A	Use up/down arrows to select hour of event	Hour of event; range 0 to 23
Minute	Minute	N/A	Use up/down arrows to select minute of event	Minute of event; range 0 to 59

Example

The purpose of the example is to control the timing of lights in Building #1 for two different season sets. If you work after hours in this building, know that if the lights go out you can turn them back on. They will then stay on for a few hours and then turn off again.

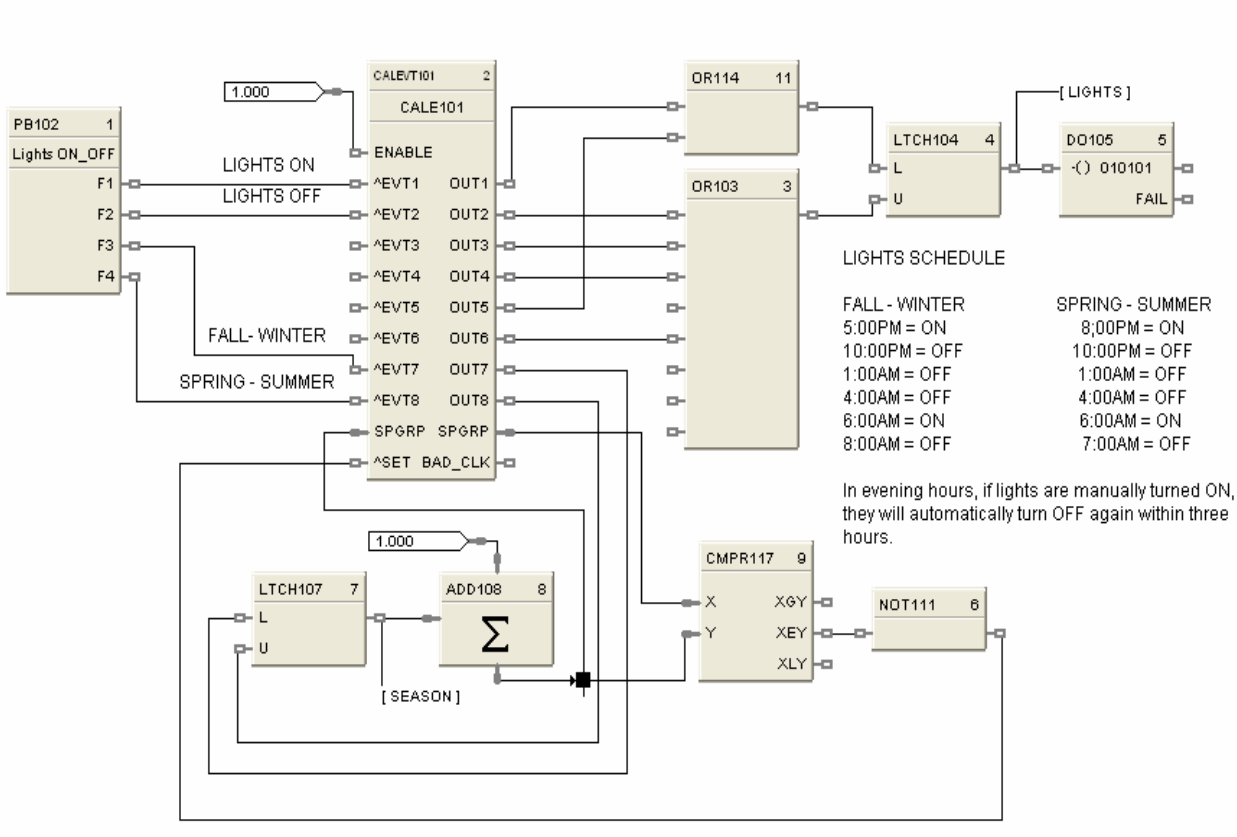

Figure 22 CALEVT function block example

CARB Carbon Potential Function Block

Description

The CARB label stands for Carbon Potential...

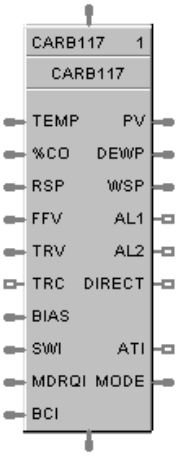

This block is part of the *Loops* category

Function

A combined Carbon Probe and Temperature Probe and PID algorithm determine Carbon Potential of furnace atmospheres based on a Zirconia probe input.

Input

Probe = Sensor Input from AI block (0-2000 mV)

TEMP = Temperature Input (°F or °C) from AI block

%CO = Percent Carbon Monoxide 1 % to 100 %

RSP = Remote Setpoint Analog Input value in Engineering Units or Percentage (0-1.5)

FFV = Feedforward value in percentage (0 % to 100 %) The Feedforward value is multiplied by the Feedforward Gain, then directly summed into the output of the PID block.

TRV = Output Track value in Percentage. Output = TRV when TRC is on. (If control output OUT is connected back to the Track Value Input [TRV], then the Track Command Input [TRC] will function as an output hold. This may be used where input probes are undergoing burnoff.)

TRC = Output Track Command [ON, OFF] On – Enables TRV (Mode = Local Override)

BIAS = Remote Bias value for Ratio PID

SWI = Switch Inputs (from LPSW function block)
0 = No Change
1 = Initiate Autotuning
2 = Change Control Action (reverse to direct acting or direct to reverse acting)
4 = Force Bumpless Transfer
8 = Switch to Tune Set 1
16 = Switch to Tune Set 2

MDRQI = External Mode request (typically connected to the MDRQO output of a MDSW function block that encodes discrete switch inputs).

0 = No Change
1 = Manual Mode Request
2 = Auto Mode Request
4 = Local Setpoint Request
8 = Remote Setpoint Request

BCI = Back Calculation Input Value—See ATTENTION 1.

Output

PV = Calculated Process Variable (% Carbon) for monitoring

DEWPT = Calculated Dewpoint

WSP = Working Setpoint in Engineering Units for monitoring (setpoint in use)

AL1 = Alarm 1 - Digital Signal

AL2 = Alarm 2 - Digital Signal

DIRECT = ON = Direct; OFF = Reverse

ATI = Autotune Indicator (ON = Autotune in Progress)

MODE = Loop mode status (typically connected to the Mode Flags block for encoding). Value indicates mode as follows:

0.0	RSP AUTO
1.0	RSP MAN
2.0	RSP Initialization Manual (See ATTENTION 1)
3.0	RSP Local Override (See ATTENTION 1)
4.0	LSP AUTO
5.0	LSP MAN
6.0	LSP Initialization Manual (See ATTENTION 1)
7.0	LSP Local Override (See ATTENTION 1)

BCO - Back Calculation Output (for blocks used as Cascade Secondary)—See ATTENTION 2.

ATTENTION

1. When a request to change from Auto to manual is received and:
   - the request comes from the operator Interface, *the request is ignored*.
   - the request comes from the Mode Switch (MDSW) function block, the request is retained and when leaving the Initialization Mode or Local Override Mode the loop will go to manual.
2. BCO output is provided for applications where the block is used as a cascade secondary. BCI input is provided for applications where the block is used as a cascade primary. When the BCO output of a secondary loop is connected to the BCI input of a primary loop, bumpless transfer is achieved when the secondary is switched into remote setpoint (i.e., cascade) mode. In addition, the primary loop is prevented from reset windup when the secondary is decoupled from the process. The secondary is decoupled from the process when it is in local setpoint mode or manual output mode, has reached a setpoint or output limit, or is integral limiting because its BCI input. For example, see Figure 76.
3. If Anti-Sooting is checked Working SetPoint (WSP) could be less than desired SetPoint (SP).

Configuration parameters

The CARB properties dialog box is divided into 8 tab cards

GENERAL
START/RESTART
RSP
RANGE/LIMIT
TUNING
ACCUTUNE III
ALARMS
CARBON POTENTIAL

Click on the tab to access the properties for that tab.

GENERAL tab

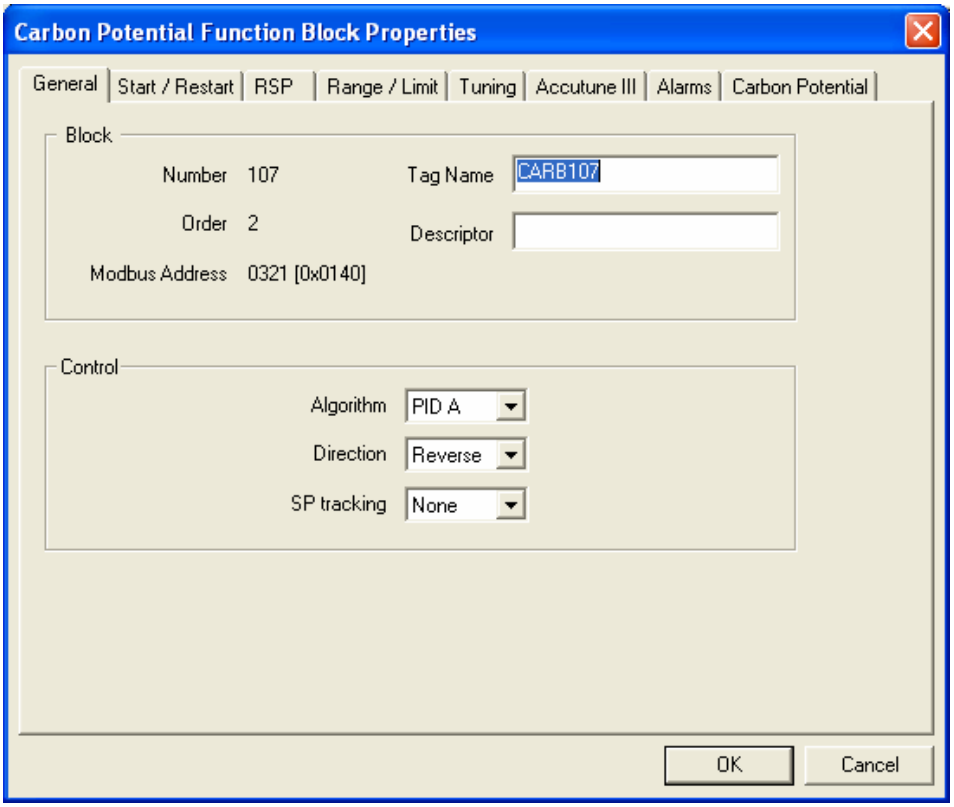

Table 30 CARB General tab configuration parameters

Properties Group	Parameter	Index #	Parameter Description	Value or Selection
Block	**Order**	N/A	Execution Order	Read Only. To change block order, right-click on a Function Block and select Execution Order.
	Tag Name		32-characters unique tag name (ASCII characters only)	Up to 32-characters
	Descriptor		Block Descriptor	Up to 32-characters
Control	**Algorithm**	N/A	Control Algorithm ***Note: In PID B, step changes in setpoint will not bump the output; the output will slew smoothly to the new value.*** ***In PID A, a step change in setpoint will result in a step change in output***.	**PID A** - is normally used for 3 mode control. The output can be adjusted somewhere between 100 % and 0 %. It applies all three control actions - Proportional (P), Integral (I), and Derivative (D) - to the error signal. **PID B** - Unlike the PID-A equation, the controller gives only an integral response to a setpoint change, with no effect on the output due to the Gain or Rate action, and gives full response to PV changes. **DUPA -** like PIDA but provides an automatic method to switch tuning constant sets for Heat/Cool applications. **DUPB -** like PIDB but provides an automatic method to switch tuning constant sets for Heat/Cool applications. NOTE: With PID B or DUPB selection, you **will not** be allowed to set RESET or RPM to 0.00 (OFF). Reset must be enabled.
	Direction	N/A	Control Action	**DIRECT** - PID action causes output to **increase** as process variable increases. **REVERSE** - PID action causes output to **decrease** as process variable increases.
	SP Tracking	N/A	Setpoint Tracking	**NONE** **TRACK PV** When control mode is “manual”, local setpoint tracks process variable. **TRACK RSP** When setpoint is “remote setpoint”, local setpoint tracks remote setpoint.

START/RESTART tab

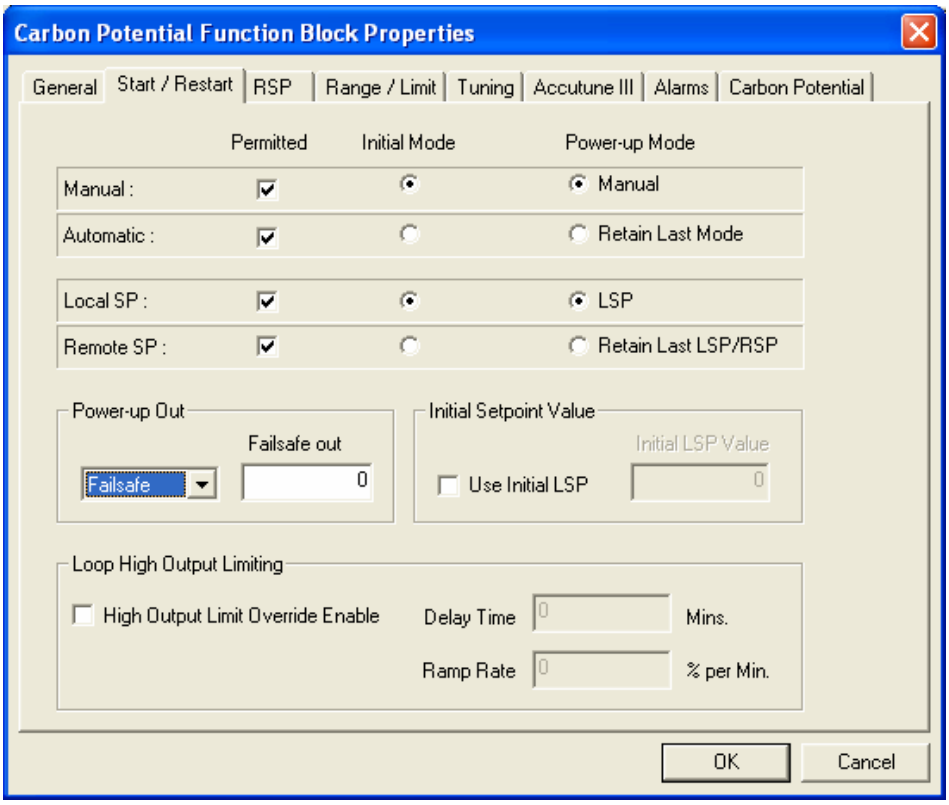

Table 31 CARB Start/Restart tab configuration parameter

Modes and Setpoints	**Permitted Mode**	MAN 8 AUTO 9	Mode permitted for the initial start and power up mode.	**Manual** **Automatic** ***May select both, must select one.***
	Permitted Setpoint	LSP 10 RSP 11	Setpoint permitted for the initial start and power up mode.	**Local Setpoint** **Remote Setpoint** ***May select both, must select one.***
	Initial Mode	N/A	Mode at NEWSTART **Newstart** is the first scan cycle following the cold start of the controller	**Manual** **Automatic** *Select one*
	Setpoint for Initial Mode	N/A	Setpoint at NEWSTART **Newstart** is the first scan cycle following the cold start of the controller	**Local Setpoint** **Remote Setpoint** *Select one*

	Power up Mode	N/A	Mode at power up	**Manual** **Retain Last Mode** Same mode (auto or manual) *Select one*
	Power up Setpoint	N/A	Setpoint at power up	**Local Setpoint** **Retain Last LSP/RSP** Same Setpoint (LSP or RSP) ***Select one***
Power Up Out	**Power Up Out**	N/A	Output at Power up	**LAST OUT** - Same as at power down. **FAILSAFE** - Failsafe output value.
	Failsafe Out	16	Failsafe Output Value	–5 % to 105 %
Initial Setpoint Value	**Use initial LSP**	49	Use Initial Local Setpoint	Click on radio button to select
	Initial LSP Value	50	Initial Local Setpoint Value	Enter Initial Local Setpoint Value
High Output Limit Select	**Use Limit Control - Limit Value**	51	High Limit Override **See NOTE 1**	Click radio button to select.
	Delay Time	52	Delay Time for High Limit Output Select	Enter time in minutes to use TRV as the output high limit. See **NOTE 1.**
	Ramp Rate	53	Ramp Rate for High Limit Output Select	**Enter Rate in % per minute to ramp the default output high limit after delay time expires.**

Note 1. When ON, the HiLimOvr parameter causes the meaning of TRC and TRV to be redefined for process startup rate control. In this case, TRC set ON causes the algorithm to calculate a value to override the default output high limit.

The initial value of the limit override comes from TRV. This value is held until the configured delay time expires. A delay time of zero means delay indefinitely. In this case, the output high limit will track the value on TRV until such time that TRC returns to OFF.

When the delay time expires, the output limit will ramp to the default configured value and the configured ramp rate. When the ramped output limit equals or exceeds the default configured value, the output limit override status is set OFF and the default value is used. A ramp rate of zero will cause immediate termination of the high output limit override.

A transition of the TRC input to OFF at any time will terminate the output limit override function and restore the limit to the default configured value. The TRC input must transition to OFF before the output limit override function can be started again.

RSP tab

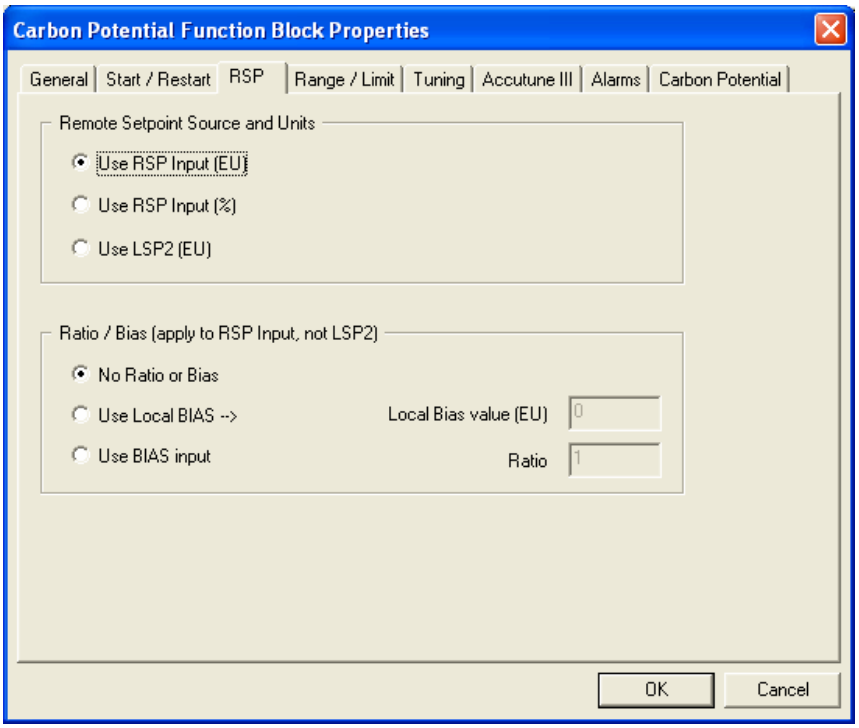

Table 32 CARB RSP tab configuration parameters

Properties Group	Parameter	Index #	Parameter Description	Value or Selection
Remote Setpoint Source and Units	**Use RSP Input (EU)**	N/A	Use Remote Setpoint in Engineering Units	Click on radio button to select.
	Use RSP Input (%)	N/A	Use Remote Setpoint in Percent	Click on radio button to select.
	Use LSP2 (EU)	N/A	Use Local Setpoint #2 in Engineering Units	Click on radio button to select.
Ratio/Bias **(RSP Input Only)**	**No Ratio or Bias**	N/A	No ratio and bias applied to the function block	Click on radio button to select.
	Use Local Bias		Use Bias value selected on Tab	Click on radio button to select Enter value at "**Local Bias Value**" on tab.
	Use Bias Input		Use Bias value attached to an input to the block	Click on radio button to select.
	Local Bias Value (EU)	46	Local bias value in engineering units	Enter local bias value.
	Ratio	45	Gain value for Ratio PID	–20 to +20

RANGE/LIMIT tab

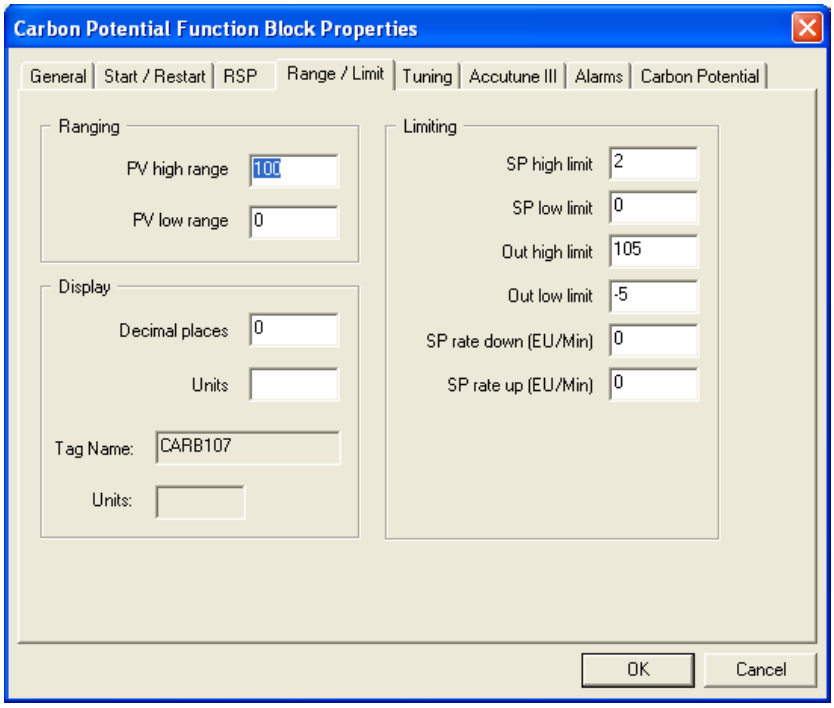

Table 33 CARB Range/limit tab configuration parameters

Properties Group	Parameter	Index #	Parameter Description	Value or Selection
Ranging	**PV High range**	4	PV High Range Value	–99999 to 99999
	PV Low Range	5	PV Low Range Value	–99999 to 99999
Display	**Decimal Places**	N/A	Number of digits to display after decimal point.	0 to 5
	Units	N/A	Text to display for EU	6 characters
	DEV Bar Range (EU)	N/A	Deviation Bar Range on Operator Interface	–99999 to 99999
Limiting	**SP High Limit**	17	Setpoint High Limit Value - prevents the local and remote setpoints from going above the value set here.	0 to 2.0 Used for anti-soot
	SP Low limit	18	Setpoint Low Limit Value - prevents the local and remote setpoints from going below the value set here.	0 to 2.0
	Out High Limit	20	Output High Limit Value - is the highest value of output beyond which you do not want the automatic output to exceed	–5 % to 105 %
	Out Low Limit	21	Output Low Limit Value - is the lowest value of output beyond which you do not want the automatic output to exceed	–5 % to 105 %
	SP Rate Down	41	Setpoint Rate Down value - when making a setpoint change, this is the rate at which setpoint will change from the original setpoint **down** to the new one.	0 (off) to 9999 (eu/min)
	SP Rate Up	42	Setpoint Rate Up value - when making a setpoint change, this is the rate at which setpoint will change from the original setpoint **up** to the new one.	0 (off) to 9999 (eu/min)

TUNING tab

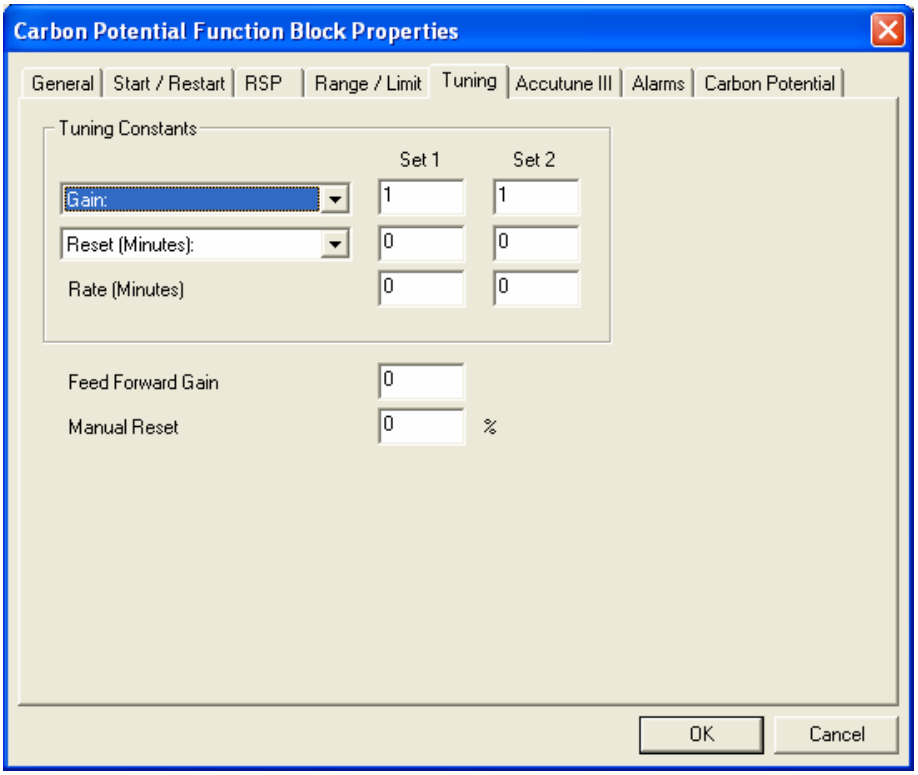

Table 34 CARB Tuning tab configuration parameters

Properties Group	Parameter	Index #	Parameter Description	Value or Selection
Tuning Constants	**Prop Band** **or** **Gain**	0 PB1 or Gain 1 36 PB2 or gain 2	**Proportional Band (PB)** - is the percentage of the range of the measured variable for which a proportional controller will produce a 100 % change in its output. **Gain** - is the ratio of output change (%) over the measured variable change (%) that caused it. $G = \frac{100\ \%}{PB\ \%}$ where PB is the proportional Band (in %)	0.1 to 1000 0.1% to 1000 %

Properties Group	Parameter	Index #	Parameter Description	Value or Selection
	Reset Minutes or Repeats/ Minute	2 Reset 1 38 Reset 2	**RESET** (Integral Time) - adjusts the controller's output according to both the size of the deviation (SP-PV) and the time it lasts. The amount of corrective action depends on the value of Gain. The reset adjustment is measured as how many times proportional action is repeated per minute (**Repeats/minute**) or how many minutes before one repeat of the proportional action occurs (**Minutes/repeat**).	0.02 to 50.00 ***Must be enabled for PID-B or DUP-B algorithm selections.***
	Rate Minutes	1 Rate 1 37 Rate 2	**RATE** action, in minutes affects the controller's output whenever the deviation is changing; and affects it more when the deviation is changing faster.	0 or 0.1 to 10.00 minutes 0 = OFF
Feedforward Gain	**Feed-Forward Gain**	43	Applies Gain to the Feedforward value (FFV). Feedforward Input is multiplied by this value.	0.0 to 10.0
Manual Reset	**Manual Reset**	32	MANUAL RESET- is only applicable if you do not use RESET (Integral Time).	–100 to 100 (in % of Output)

ATTENTION

DUPA and DUPB algorithm types automatically select tuning set #2 for outputs between 50 % and –5 %. Tuning set #2 must be entered for DUPA and DUPB.

ACCUTUNEIII tab

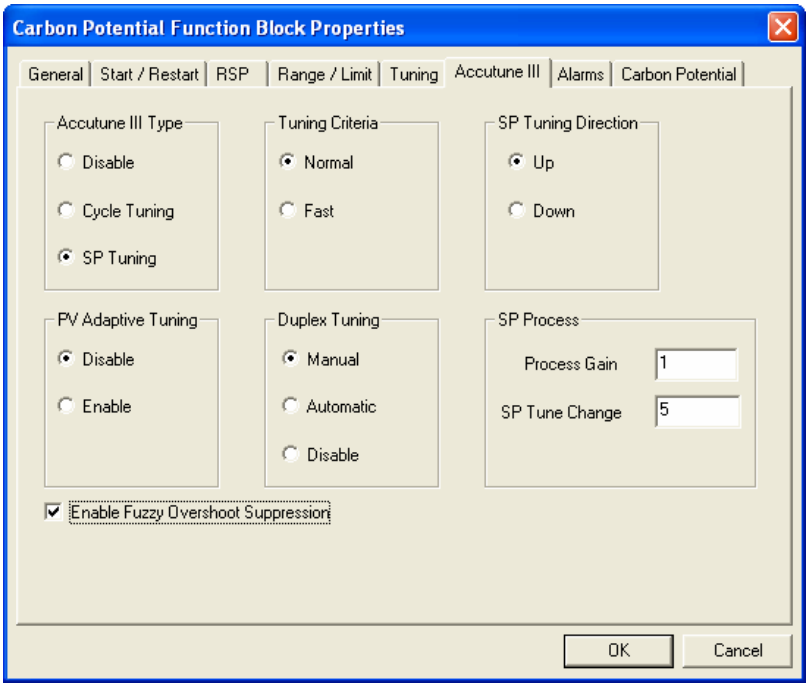

Table 35 CARB Accutune III tab configuration parameters

Properties Group	Parameter	Index #	Parameter Description	Value or Selection
Accutune III Type	**Disabled**	N/A	Disables Accutune III	Click on radio button to select.
	Cycle Tuning		Tuning parameter values are derived from the process response to the resultant action of causing the PV to oscillate about the SP value. See note 1.	Click on radio button to select.
	SP Tuning		Tuning based on the process response to a SP change. See note 2	Click on radio button to select.
SP Tuning Direction **(For SP Tuning selection)**	**UP** **Down**	N/A	The selection of either UP or DOWN results in the SP Change value added or subtracted from the present SP value.	Click on radio button to select.
SP Process **(For SP Tuning selection)**	**Process Gain** **SPTune Change**	16 57	Gain identification value for the process. This value is used to estimate the size of the initial output step for a SP Tune. This defines the value of the initial output step change that is used as the target for process identification.	Range is 0.10 to 10.0 Normal value is 1. Range is: 5 to 15 percent.

PV Adaptive Tuning	**Disable**	N/A	Disables PV Adaptive tune	Click on radio button to select.
	Enable	N/A	This method adapts a tuned process to changing system characteristics over time. When the PV deviates from the SP by a certain amount for any reason. See note 3	Click on radio button to select.
Tuning Criteria	**Normal**	N/A	Very conservative tuning designed to calculate critically damped tuning parameter values that produce minimal overshoot.	Click on radio button to select.
	Fast	N/A	More aggressive tuning than Norma. Designed to calculate under damped parameter values providing faster control to the setpoint but may have some overshot.	
Duplex Tuning ***(Active for Algorithm DUPA or DUPB on General Tab with Cycle Tuning)***	**Disable** **Manual** **Automatic**	N/A	Disable -Duplex type tuning is disabled and simplex type tuning is used instead. Manual - Tuning must be initiated manually for each side. The current LSP or RSP value is used as the target SP for the desired heat or cool side tuning. For the heat side, the output cycles between 50 percent and the high output limit and for the cool side the output cycles between 50 percent and the low output limit. Tuning values are calculated and stored only for the side tuned. Heat and Cool tuning are sequentially performed automatically. During the operation of this tuning the target SP used is the midpoint between the high output limit and 50 percent for the heat side and the low output limit and 50 percent for the cool side. During tuning for each side the cycling of the output results in the PV oscillating around the target SP value. From the data gathered during the oscillations, tuning values are calculated and stored for each side. After tuning on both sides is completed, the process SP is returned to the value of the last SP used prior to the initiation of the tuning procedure.	Click on radio button to select.

Enable Fuzzy Overshoot Suppression **Click on block to select**	34	Fuzzy Overshoot Suppression minimizes overshoot after a setpoint change or a process disturbance. The fuzzy logic observes the speed and direction of the PV signal as it approaches the setpoint and temporarily modifies the internal controller response action as necessary to avoid an overshoot. There is no change to the PID algorithm, and the fuzzy logic does not alter the PID tuning parameters. This feature can be independently Enabled or Disabled as required by the application to work with “TUNE” On-Demand tuning.

ATTENTION

Accutune III is an On-demand tune only. You must provide a 0 to 1 transition to start another tuning cycle. The tuning will disturb the output to evaluate the tuning constants required.

TUNING NOTE: For this block, during tuning using either Cycle or SP tuning, a constant temperature value should be provided via the temperature input.

Note 1: CYCLE TUNING - This tuning method uses the measured ultimate gain and period to produce tuning parameter values. Cycle tuning does not distinguish between process lags and always results in gain based on PV amplitude and calculates values of Reset and Rate based on time of the SP crossings (The Reset value is always 4x the Rate value.) This method does not require a stable process initially and the process may be moving. Cycle tuning is applicable to Three Position Step control and can be used for integrating processes (level control).

Note 2: SP TUNING - When initiated the control loop is put into an initial temporary manual state until the process characteristics are identified. This period may last up to a minute. During this time the Tune status shows Not Ready, and then an initial output step is made using the preconfigured size and direction parameters along with the preset output value. The resultant process action is used to determine the tuning parameters and once the process identification has completed, the loop is returned to automatic control.

Note 3: PV ADAPTIVE TUNING - This method adapts a tuned process to changing system characteristics over time. When the PV deviates from the SP by a certain amount for any reason, the adaptive tuning algorithm becomes active and begins to observe the resulting PV action. If the process becomes unstable and oscillates, PV Adaptive Tuning eventually brings the process into control by retuning parameter values (as needed) using a systematic approach defined by an expert based method of tuning rules. Should the process not oscillate but be observed as too fast or sluggish, a different expert rules set is applied to result in the slowing down or speeding up of the process by adjusting certain tuning parameter values. This method continuously learns the process as PV deviations are observed and adapts the tuning parameters to the process response.

ALARMS tab

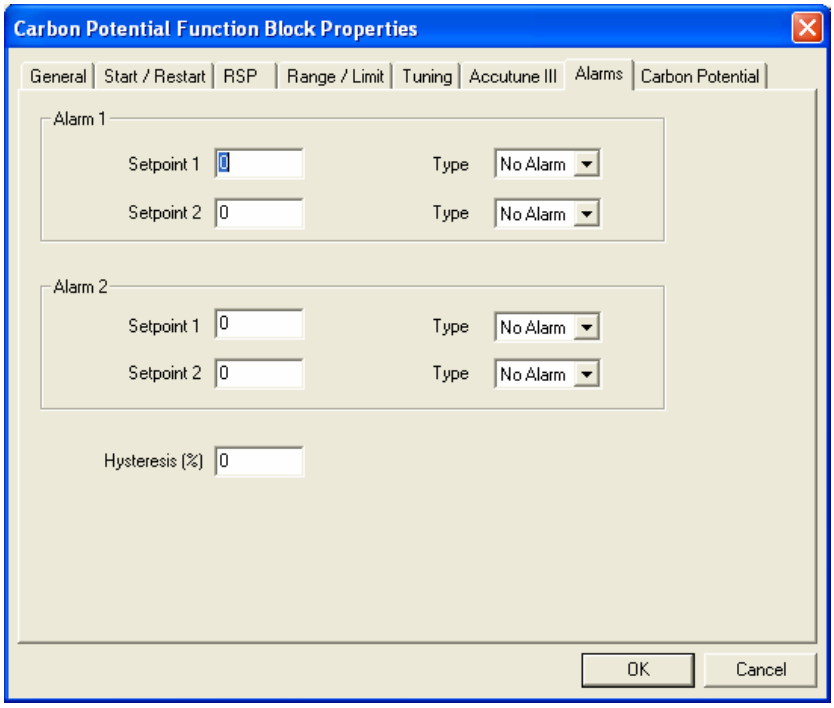

Table 36 CARB Alarms tab configuration parameters

Properties Group	Parameter	Index #	Parameter Description	Value or Selection
Alarm 1	**Setpoint 1**	23	**Alarm 1 Setpoint 1 Value** - this is the value at which you want the alarm type chosen below to activate	–99999 to 99999 in Engineering Units
	Type	N/A	**Alarm 1 Setpoint 1 Type** - select what you want Alarm 1 Setpoint 1 to represent.	Selections: NO ALARM PV_HIGH PV_LOW DEV_HIGH DEV_LOW SP_HIGH SP_LOW OUT_HIGH OUT_LOW
	Setpoint 2	24	Alarm 1 Setpoint 2 Value	Same as **Alarm 1 Setpoint 1**
	Type	N/A	Alarm 1 Setpoint 2 Type	Same as **Alarm 1 Setpoint 1**
Alarm 2	**Setpoint 1**	25	Alarm 2 Setpoint 1 Value	Same as **Alarm 1 Setpoint 1**
	Type	N/A	Alarm 2 Setpoint 1 Type	Same as **Alarm 1 Setpoint 1**
	Setpoint 2	26	Alarm 2 Setpoint 2 Value	Same as **Alarm 1 Setpoint 1**
	Type	N/A	Alarm 2 Setpoint 2 Type	Same as **Alarm 1 Setpoint 1**
Alarm Hysteresis	**Hysteresis**	31	Alarm Hysteresis in %	0 % to 5 %

CARBON POTENTIAL tab

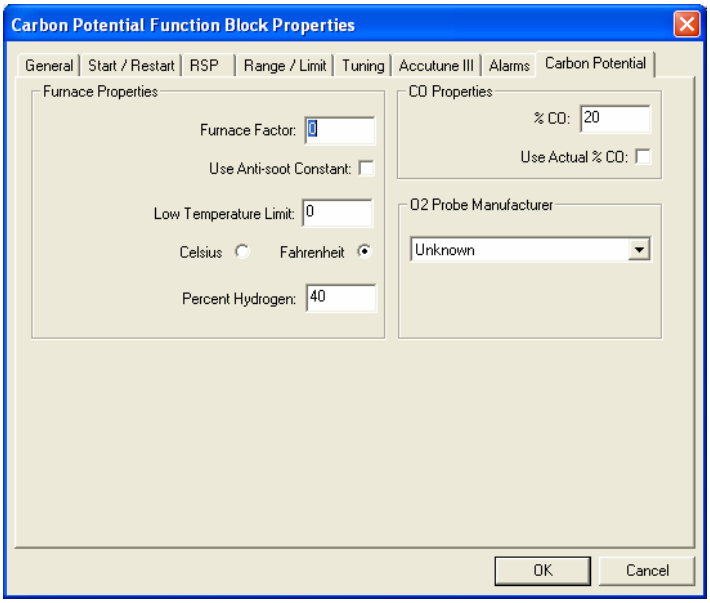

Table 37 Carbon Potential tab configuration parameters

Properties Group	Parameter	Index # Rev. 4.0 and higher/ Rev. 3.x and lower	Parameter Description	Value or Selection
Furnace Properties	**Furnace Factor**	68/57	Allows you to adjust the % Carbon as measured by the controller to agree with the results of actual shim stock tests. This adjustment may be needed to correct for specific furnace characteristics such as atmosphere differences, probe location, and furnace leaks.	–0.5 %C to +0.5 %C
	Use Anti soot constant	69/58	Activates anti-sooting feature that limits the working setpoint of the carbon control loop to a value that prevents sooting in the furnace.	Click on block to select SP HLIM is used for anti-soot.
	Low Temperature Limit	71/60	Holds controller output to 0 % until limit is exceeded.	0 to 2500 degrees F (1400° recommended) Unit should match C/F selection
	Temperature Units	70/59	Probe temperature units for display.	Click on radio button to select Fahrenheit or Centigrade
	Percent Hydrogen	73/62	Percent Hydrogen	1 to 100 default = 40

CO Properties	**%CO**	66/55	Allows you to adjust % Carbon measurement to compensate for variations in the amount of CO in the carrier gas.	2.0 to 35.0 default = 20
	Use Actual % CO	67/56	Function block will use the actual % Carbon Monoxide that is defined through an analog input.	Click on block to select
O2 Probe Manufacturer	**Carbon Probe Vendor**	N/A	Select from Drop Down List of Manufacturers.	• Advanced Atmosphere Control Corp. • Furnace Control Corp. • Marathon Monitors • Super Systems Inc.

Example

Figure 23 shows Function Block Diagrams using a CARB function block.

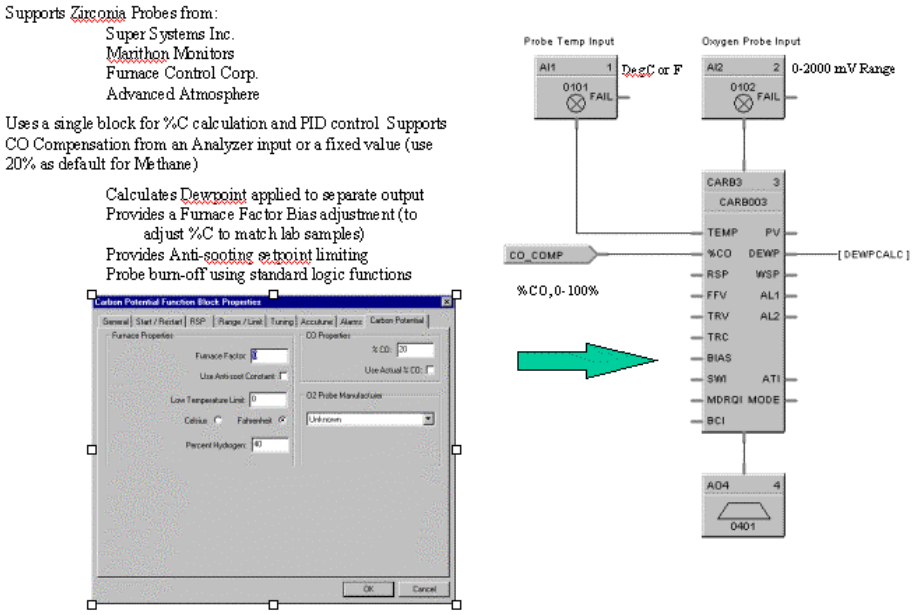

Carbon Potential Probe Burn-off

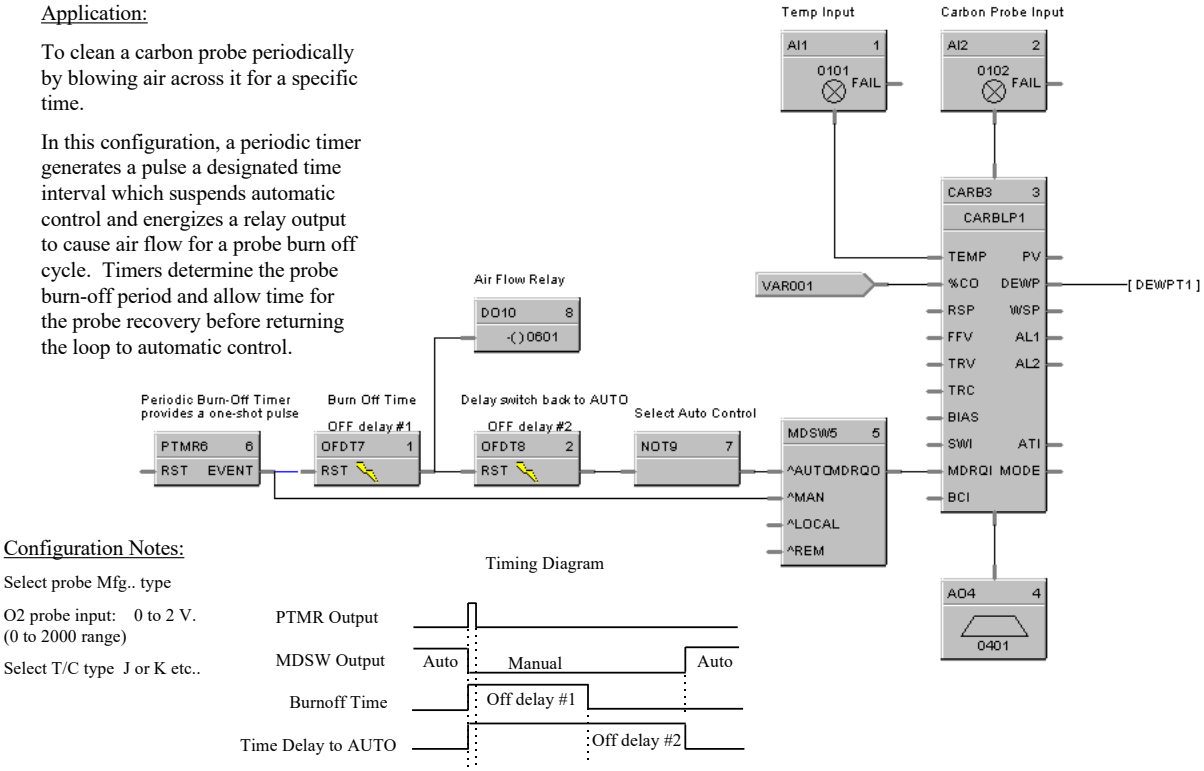

Figure 23 CARB function block examples

CAVG Continuous Average Function Block

Description

The CAVG label stands for Continuous Average.

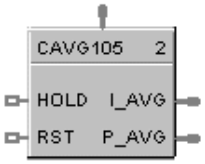

This block is part of the *Calculations* category.

Function

Provides the average value of a single analog parameter for a user specified time period, plus the running (instantaneous) average within the time period. A running average value is updated at the end of each sample period. Time periods to 1440.0 minutes are supported. At the end of the time period, the running average value is transferred to I/O process output value. A hold input allows excluding samples from the average when active.

Cold Start – On the first cycle after a cold start, the instantaneous average output is initialized to current input value, the sample counter begins to increment, and the period timer begins to decrement (assuming that Reset is OFF). The previous average output is set to zero.

Warm Start – On a warm start, the calculations continue where they left off. There is no attempt to compensate for the time the power was off or to resynchronize with the time of day.

Input

INPUT = Analog Input

RESET = Controls the sample calculations.

If **OFF**, the input samples are accumulated, the sample counter is incremented, the time remaining decrements and the average value is calculated and written to the outputs.
If **ON**, the outputs are held at their last values, the internal accumulators and sample counters are cleared, and the time remaining is re-initialized to the full average period.
If **ON to OFF transition**, the average output is set to the input value, and the period timer begins to decrement.
The RESET pin does not affect the previous average output value.

HOLD = If **OFF**, calculations run as normal. If **ON**, input samples are not accumulated and included in the average calculation, the time remaining continues to decrement. The output values are held at their last state prior to the OFF to ON transition.
If the averaging period elapses while **HOLD is ON**, the instantaneous average will maintain the last calculated average value, the previous average is updated to this value, the internal accumulators and sample counters are cleared, and the time remaining is re-initialized to the full averaging period.

Output

I AVG = Instantaneous calculation of the current average.
P AVG = previous calculated average value.

Block properties

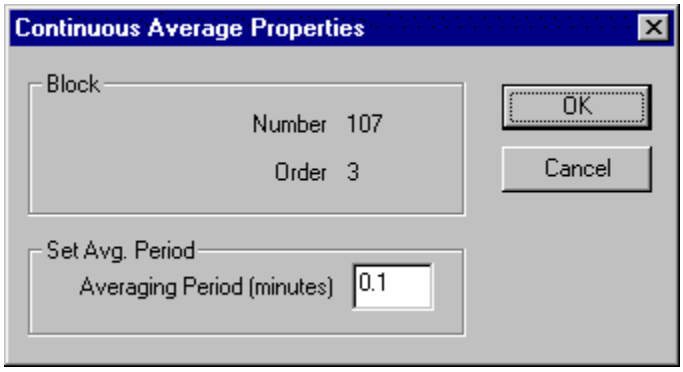

Double click on the function block to access the function block properties dialog box.

Configuration parameters

Table 38 Continuous average configuration parameters

Properties Group	Parameter	Index #	Parameter Description	Value or Selection
Set Avg. Period	**Averaging Period**	0	Time period in which the Continuous Average will be calculated. When the averaging period elapses, the last valid value will be set equal to the instantaneous value. The internal accumulators and sample counters will be cleared and the time remaining will be re-initialize to the full average period.	0.1 to 1440.0 in minutes

Example

Figure 24 shows a Function Block Diagram using a CAVG function block.

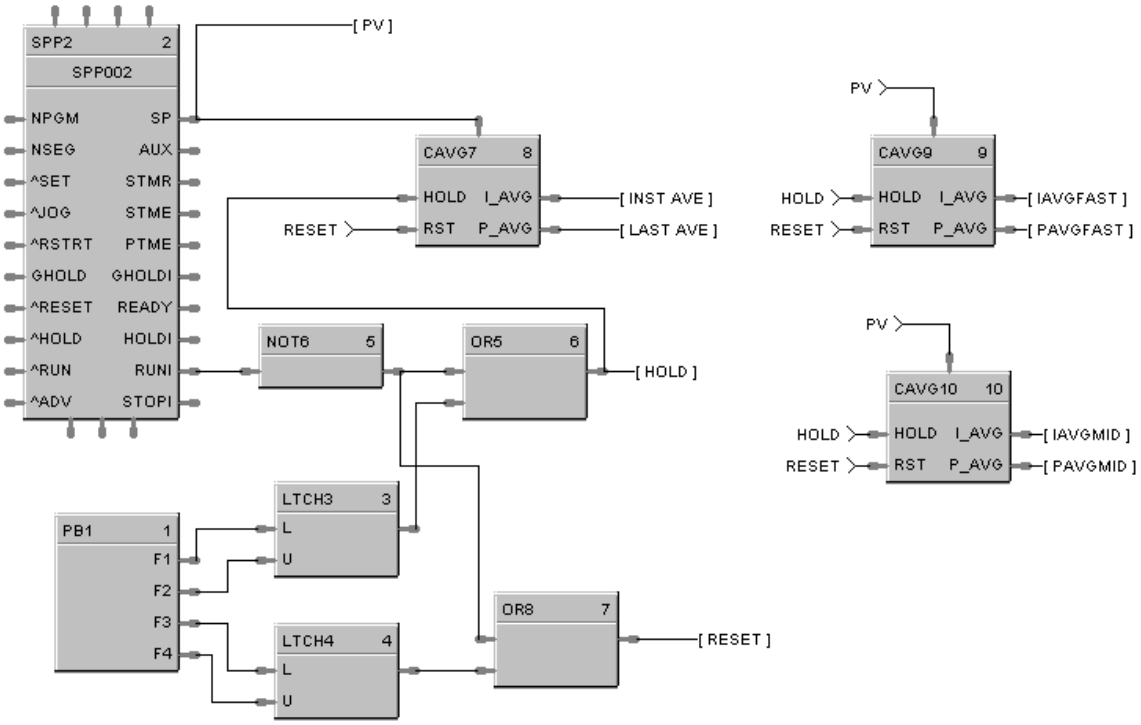

Figure 24 CAVG function block example

CMPR Comparison Calculation Function Block

Description

The CMPR label stands for Comparison Calculation.

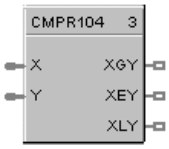

This block is part of the *Calculations* category.

Function

Compares value of X input to value of Y input and turns **ON** one of three outputs based on this comparison.

- If X input is greater than Y input, then: **XGY = ON.**
- If X input equals Y input, then: **XEY = ON.**
- If X input is less than Y input, then: **XLY = ON.**

Input

X = First analog value.
Y = Second analog value

Output

XGY = Digital signal state based on calculation.
XEY = Digital signal state based on calculation.
XLY = Digital signal state based on calculation.

Block properties

Double click on the function block to access the function block properties dialog box.

Example

Figure 25 shows a Function Block Diagram using a CMPR function block to open a vent if input 1 is higher than input 2.

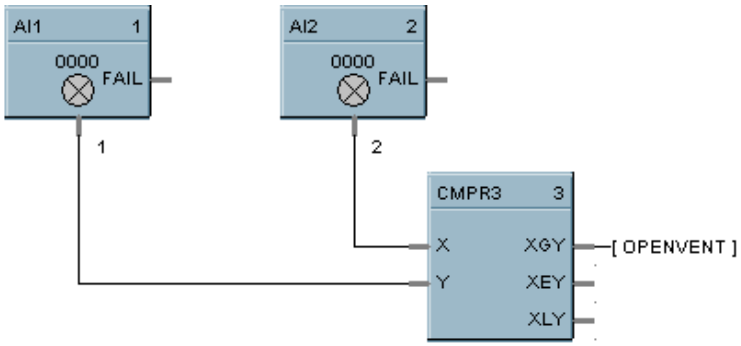

Figure 25 CMPR function block example

DC Device Control Function Block

Description

The DC label stands for Device Control.

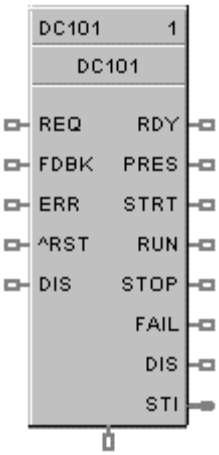

This block is part of the *Auxiliary* category.

Function

The Device Control function block is normally used to control pumps. Based on certain events listed in Table 39 the device will be placed into one of six states: READY, PRESTART, STARTING, RUNNING, STOPPING, DISABLED, or FAILED. The READY (off state) is the initial state of the function block. Each configuration is limited to a maximum of 16 Device Control function blocks.
Forcing of outputs is NOT permitted within this block.

Inputs

REQ = (run request) when ON [Logic 1], puts the device in the Starting / Running state. When OFF, puts the device in Stopping / Ready state.

FDBK = feedback from the controlled device; ON = device has started, OFF = device has not started.

ERR = (in) – ON when the controlled device reports a failure, causes the device control to transition to the FAILED state.
OFF = No device failure.

^RST = an OFF to ON transition will manually reset the control when it is in the FAILED state and return to the READY state.

DIS = (disable) When OFF, the device control operates normally. When ON, immediately transitions to the DISABLED state, it prevents the device from starting if in the ready state or immediately shuts-down the device if it is currently starting up or running state.

Outputs

OUT = Primary block output – the output is ON in the RUNNING and STOPPING states, else OFF.

RDY = (ready) ON when the control is in the Ready State (the controlled device is off and waiting for a request to run), otherwise OFF.

PRES = (prestart) ON while in the prestart state (a request to run the device has been received and the start delay timer is >0, otherwise OFF.

STRT = (starting) ON while in the start state (start timer has expired and there is a request to start the device. The device feedback timer is started. The device is being monitored for failures),

RUN= (running) ON while in the Running state (the controlled device has completed start up (Device Feedback) and is now running; occurs after the start delay timer expires; device is being monitored for failures and feedback that it started) otherwise OFF.

STOP = (stopping) ON while in the Stopping state (the controlled device is requested to turn off; stop delay timer is running; device is being monitored for failures, interlocking and returning to the run state), otherwise OFF.

FAIL = (failed) ON when the control is in the Failed state (the controlled device reported a failure or did not start up in time; device is being monitored for a manual or automatic reset), otherwise OFF.

DIS = (disabled) ON while in the Disabled state (the controlled device is locked-out; it cannot start running until the disable input signal turns OFF), otherwise OFF.

STI = An enumeration representing the different states of the control.
Where: 0 = NOT USED, 1 = READY, 2 = PRESTART, 3 = STARTING, 4 = RUNNING, 5 = STOPPING, 6 = DISABLE, 7 = FAIL.

Conditions for transition from FAIL to READY state

One of the following conditions must occur to transition from the FAIL state to the READY state:

a) If a Feedback error is the initial reason for the failure, then a manual reset is the only method for returning to the Ready state.

b) If Automatic-Reset is selected, then you return to the Ready state when Device Failure input turns OFF.

c) If Automatic-Reset is not selected, then you return to the Ready state when Device Failure input is OFF and the Reset input transitions OFF to ON.

Monitored events and device states

Table 39 shows which events are monitored in each state.

Table 39 Monitored events and device states

MONITORED EVENTS	DEVICE STATES						
	READY (Note 1)	PRE-START	STARTING	RUNNING	DISABLED (Notes 1,2)	STOPPING	FAILED
Run Request turns ON	X					X	
Run Request turns OFF		X	X	X			
Disable (ON)	X	X	X	X		X	
Disable (OFF)					X		
Feedback from Device			X	X			
Device (ERR) Fail ON	X		X	X		X	
Device (ERR) Fail OFF							X Note 3
Reset (Rising Edge)							X
Start Delay Timer Expires (edge)		X					
Feedback Timer Expires (edge)			X	X			
Stop Delay Timer Expires (edge)						X	

Notes:

1. If a device fails while in the state of READY or DISABLE, the device failure is not recognized until the control goes into the PRESTART state.
2. There are restrictions when the control goes into the Disable state from the Running State. The device is immediately turned OFF without a Stop Delay. When the disable turns OFF, the control changes to the Ready state.
3. ERR Off (device fail) is monitored in Failed state, only if:
   a) Failed input caused the failure, and
   b) Auto Reset is enabled.

Block properties

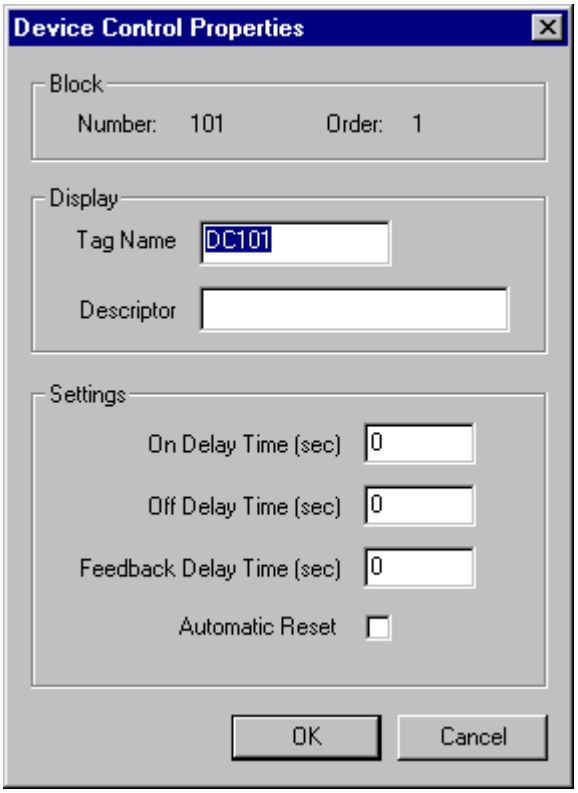

Double click on the function block to access the function block properties dialog box.

Configuration parameters

Table 40 Device control function block parameters

Properties Group	Parameter	Index #	Parameter Description	Value or Selection
Display	**Tag Name**	N/A	32-characters unique tag name (ASCII characters only)	Up to 32-characters
	Descriptor	N/A	Block description	Up to 32-characters (ASCII characters only)
Settings	**On Delay Time (sec)**	1	*Starting Time* – time delay between RUN request and Output ON. This parameter is configurable from the Operator Interface.	Range: 0 – 99999 seconds (default 0)
	Off Delay Time (sec)	2	Stopping Time – time delay before the Output turns OFF after and OFF request. This parameter is configurable from the Operator Interface.	Range: 0 – 99999 seconds (default 0)

Properties Group	Parameter	Index #	Parameter Description	Value or Selection
	Feedback Delay Time (sec)	3	Feedback-Fail-Delay: if during this time-period there is no feedback from a device confirming the control is in the Running state, then the block enters the FAIL state and Out is turned OFF. If a device sends feedback during this time-period, then this timer is reset. This parameter is configurable from the Operator Interface.	Range: 0 – 99999 seconds (default 0)
	Automatic Reset *(Click on Box to turn ON)*	0	if set to AUTO, then the block will reset itself after the failure (Fail input) turns off. If set to MANUAL, a Reset (signal input or from the Operator Interface station) is required to remove the failure condition. This parameter is determined when the block is configured.	ON = Automatic Reset (*box selected*) OFF = Manual Reset (*box deselected*)

Example

Figure 26 shows a Function Block Diagram using a Device Control function block to control a pump to fill a tank.

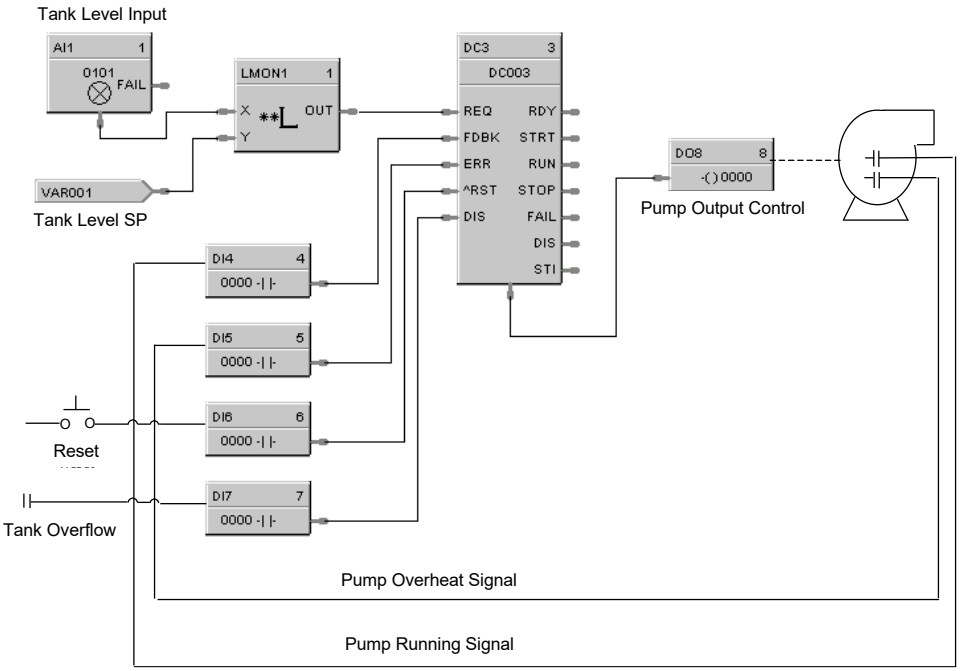

Figure 26 DC function block example

DCMP Deviation Compare Function Block

Description

The **DCMP** label stands for **Deviation Compare.**

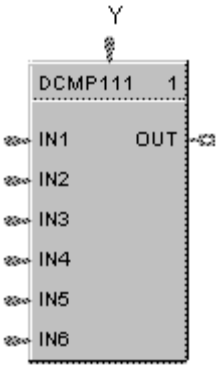

This block is part of the *Calculations* category

Function

Compares up to 6 analog inputs to a + or – user-entered deviation setpoint to a 7th input reference value and sets the output true if any input exceeds the deviation value from the reference value. Output is off if all inputs are less than the deviation.

Plus Dev Compare Value = Reference input + User entered Plus Deviation value

Minus Dev Compare Value = Reference input - User entered Minus Deviation value (Minus Deviation value should be a positive number)

If any IN (1-6)> the Plus Dev Compare value, Out = ON

If any IN (1-6) < the Minus Dev Compare value, Out = ON

ATTENTION

When the reference input is the average of the 6 inputs, the block performs deviation from average.

Input

IN1 = Input 1
IN2 = Input 2
IN3 = Input 3
IN4 = Input 4
IN5 = Input 5
IN6 = Input 6
Y =Reference Input

ATTENTION

All inputs should be used or a single value should be connected to multiple inputs. Unused inputs will default to 0.

Output

OUT = Hi (1) when any input exceeds the specified deviation from the reference value.

Block properties

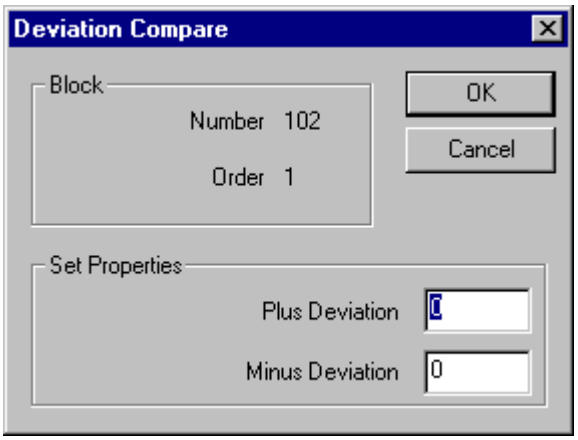

Double click on the function block to access the function block properties dialog box.

Configuration parameters

Table 41 DCMP configuration parameters

Properties Group	Parameter	Index #	Parameter Description	Value or Selection
Set Properties	**Plus Deviation**	0	Plus value deviation from reference point	Within the range of the inputs
	Minus Deviation	1	Minus value deviation from reference point	Within the range of the inputs

Example

Figure 27 shows a Function Block Diagram using a DCMP function block to hold a setpoint program if any of 6 work thermocouples deviate from the setpoint by more than the ± Deviation Limits.

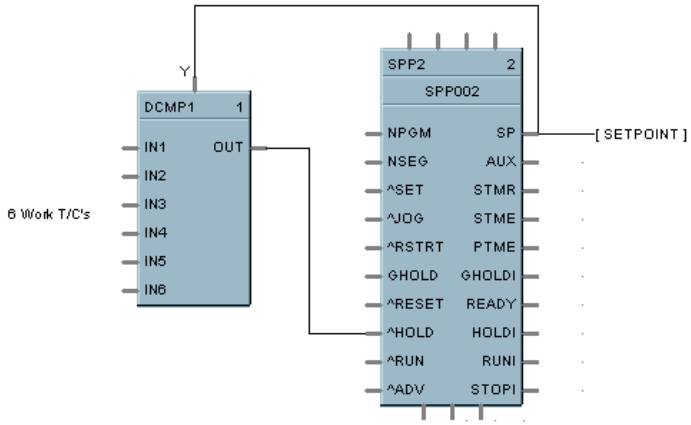

Figure 27 DCMP function block example

DDEC Digital Decoder Function Block

Description

The DDEC label stands for Digital Decoder.

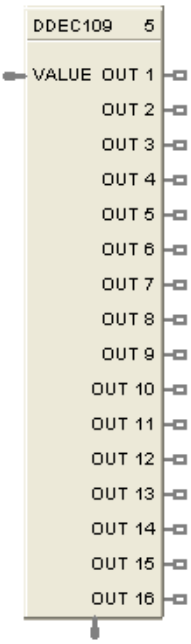

This block is part of the *Auxiliary* category.

Function

The Digital Decoder function converts an analog value from the Value Input to the binary equivalent value on the 16 digital outputs 1 through 16. The Value Input accepts whole numbers between 0 and 65535. Fractional values are ignored. The output value OCNT (bottom of block) indicates the total number of digital outputs that are ON as an analog value.

For example, a value of 285 would be represented by binary 0000000100011101, where OUT 1 is LSB and OUT 16 is MSB. OCNT = 5 (OUT 1, 3, 4, 5, 9 are ON).

All 16 outputs and the OCNT signal pin are monitored.

Forcing of the outputs is not permitted.

Inputs

VALUE = Whole number analog input value between 0 and 65535.

Outputs

Sixteen digital outputs, **OUT 1** through **OUT 16**, with OUT 1 = LSB and OUT 16 = MSB.

OCNT = Analog value representing the number of digital outputs (OUT 1 through OUT 16) that are set to ON.

Example

Figure 29 shows a Function Block Diagram using a DDEC function block.

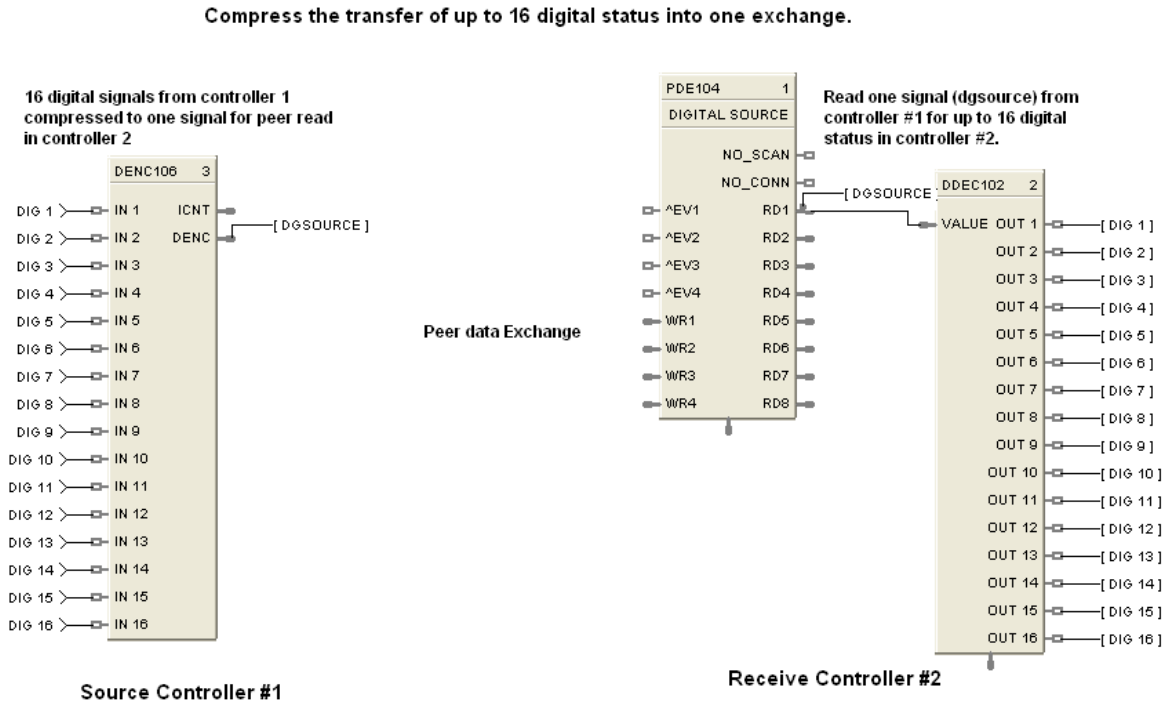

DENC Digital Encoder Function Block

Description

The DENC label stands for Digital Encoder.

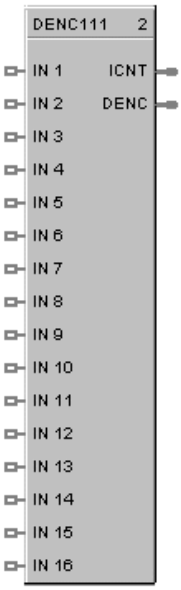

This block is part of the *Auxiliary* category.

Function

This block's main function is to totalize the number of ON states from up to 16 digital signals. The block digitally encodes up to 16 digital inputs to a single floating point output value.

Forcing of the output is not permitted.

Inputs

Sixteen digital inputs: Example: ON causes the input to be included in the total output. Unconnected pins default to OFF.

IN 1	= Digital Input 1	IN 9	= Digital Input 9
IN 2	= Digital Input 2	IN 10	= Digital Input 10
IN 3	= Digital Input 3	IN 11	= Digital Input 11
IN 4	= Digital Input 4	IN 12	= Digital Input 12
IN 5	= Digital Input 5	IN 13	= Digital Input 13
IN 6	= Digital Input 6	IN 14	= Digital Input 14
IN 7	= Digital Input 7	IN 15	= Digital Input 15
IN 8	= Digital Input 8	IN 16	= Digital Input 16

Outputs

ICNT = Sum of the Inputs set to ON.

DENC = Bit encoded value representing the state of the Input pins (IN1 - IN16); where IN1 is the LSB and IN16 is the MSB.

NOTE: This pin is typically connected to an Alternator block's "DRDYS" input pin.

Block properties

Double click on the function block to access the function block properties dialog box.

Example

Figure 29 shows a Function Block Diagram using a DENC function block using multiple digital status to select an appropriate setpoint for a flow loop.

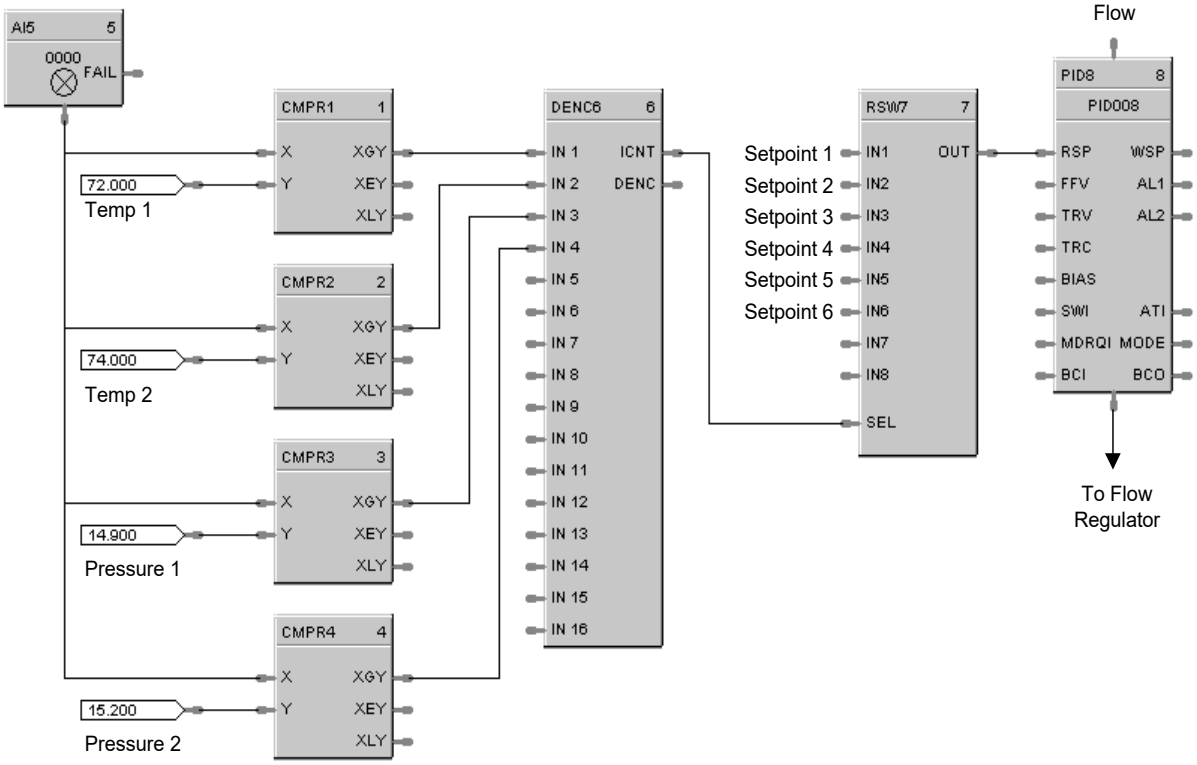

Figure 29 DENC function block example

DEWP Function Block

Description

The **DEWP** label stands for **Dewpoint** Calculation.

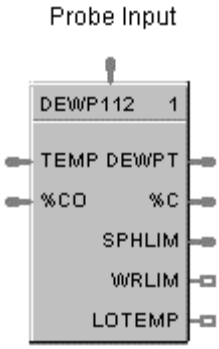

This block is part of the *Calculations* category.

Function

Monitors Dewpoint or Carbon Potential, or uses a Zirconia Probe sensor input to supply a Dewpoint PV to a PID function block for Dewpoint control. Use in conjunction with other blocks including a PID to generate more elaborate control strategies than that provided by the Carbon potential (CARB) function block.

Inputs

Probe = Oxygen Sensor Input from AI (0-2 mV)
TEMP = Temperature Input (°F or °C) from AI Input
%CO = Percent Carbon Monoxide Input 1 - 100 %

Outputs

DEWPT = Calculated Dewpoint Output
%C = Calculated Percent Carbon Output
SPHLIM = Control Setpoint High Limit for Anti-soot.
WRLIM = Command to write the setpoint high limit.
LOTEMP = ON when TEMP is <= calculated low temperature dropoff.

Block properties

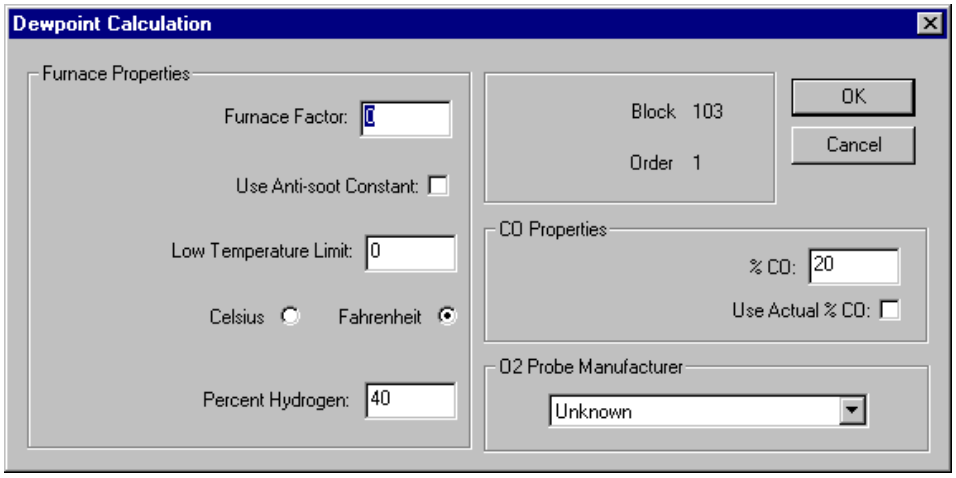

Double click on the function block to access the function block properties dialog box.

Configuration parameters

Table 42 Dewpoint function block parameters

Properties Group	Parameter	Index #	Parameter Description	Value or Selection
Furnace Properties	**Furnace Factor**	2	Allows you to adjust the % Carbon as measured by the controller to agree with the results of actual shim stock tests. This adjustment may be needed to correct for specific furnace characteristics such as atmosphere differences, probe location, and furnace leaks.	–0.5 %C to +0.5 %C
	Use Anti-Soot Constant	3	Activates anti-sooting feature that limits the working setpoint of the carbon control loop to a value that prevents sooting in the furnace.	Click on block to select SP HLIM is used for anti-soot.
	Low Temperature Limit	5	Holds controller output to 0 % until limit is exceeded.	0 to 2500 degrees F (1400° recommended) Unit should match C/F selection.
	Temperature Units	4	Probe temperature units for display.	Click on radio button to select. Fahrenheit or Celsius
	Percent Hydrogen	7	Percent Hydrogen	1 to 100 default = 40

CO Properties	**%CO**	0	Allows you to adjust % Carbon measurement to compensate for variations in the amount of CO in the carrier gas.	2.0 to 35.0 default = 20
	Use Actual % CO	1	Function block will use the actual % Carbon Monoxide that is defined through an analog input.	Click on block to select.
O2 Probe Manufacturer	**Carbon Probe Manufacturer**	N/A	Select from Drop Down List of Manufacturers.	• Advanced Atmosphere Control Corp. • Furnace Control Corp. • Marathon Monitors • Super Systems Inc.

Example

Figure 30 shows a Function Block Diagram using a DEWP function block. This application uses the Dew Point function block to calculate dew point based on using a carbon probe. A typical example might be for control of an endothermic atmosphere generator. Alternatively, a Honeywell dew point transmitter could be used for a more direct measurement.

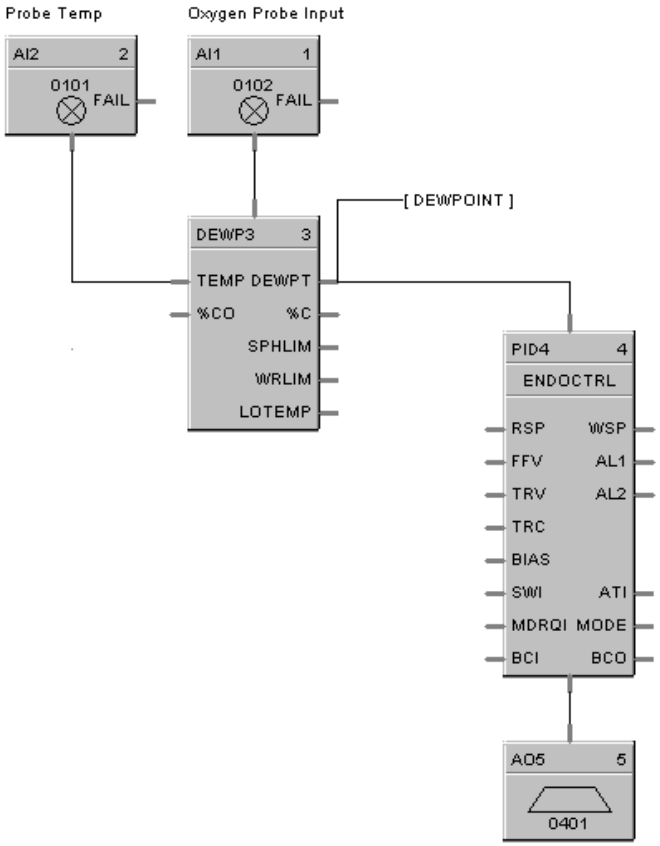

Figure 30 DEWP function block example

DI Function Block

Description

The **DI** label stands for **Discrete Input.**

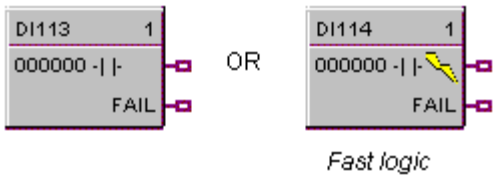

This block is part of the *I/O Blocks* categories.

Function

Discrete input blocks are used to process the digital status of a specific channel of a discrete input module. Each block requires a module and channel number during configuration. The Input status may be inverted.

If Digital Point is ON, then OUT = ON.

Output

OUT = Digital Signal

Block properties

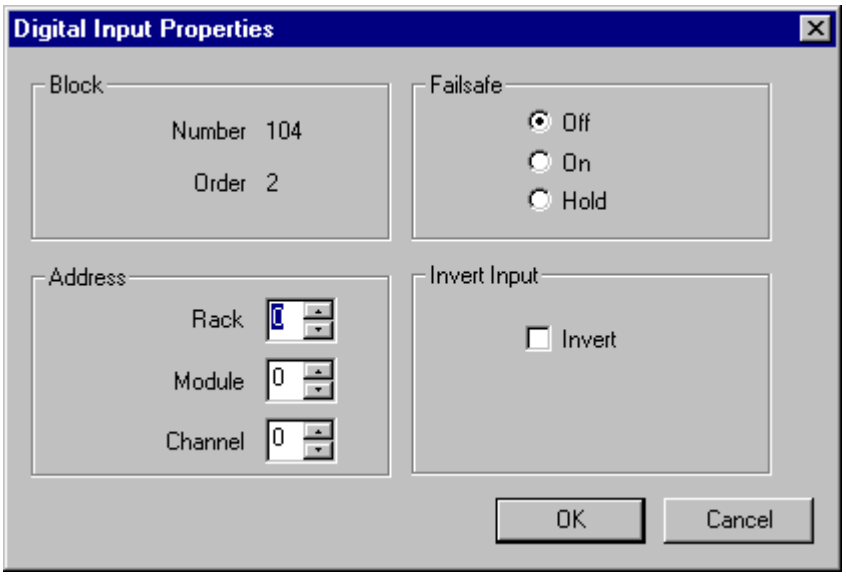

Double click on the function block to access the function block properties dialog box.

Configuration parameters

Table 43 Digital input configuration parameters

Properties Group	Parameter	Index #	Parameter Description	Value or Selection
Address	**Rack**	0	Rack on selected I/O Module	From 1 to 5
	I/O Module		Address of select I/O Module	From 1 to 12
	Channel		Channel on selected I/O Module	From 1 to 16 or 32.
		1	If INVERT is selected, OUT = inverse of physical input. The slash will be present in the CONTACT symbol only when the invert box is selected on the dialog box. (See below.) 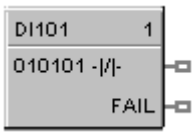	
Failsafe	**Failsafe ON**	N/A	set the output of the block to OFF when failure is detected	Click on radio button to select
	Failsafe OFF	N/A	set the output of the block to ON when failure is detected	Click on radio button to select
	Failsafe HOLD	N/A	hold the output at the last value just prior to the failure being detected	Click on radio button to select

Example

Figure 31 shows a Function Block Diagram using DI function blocks in a basic Series Parallel Circuit.

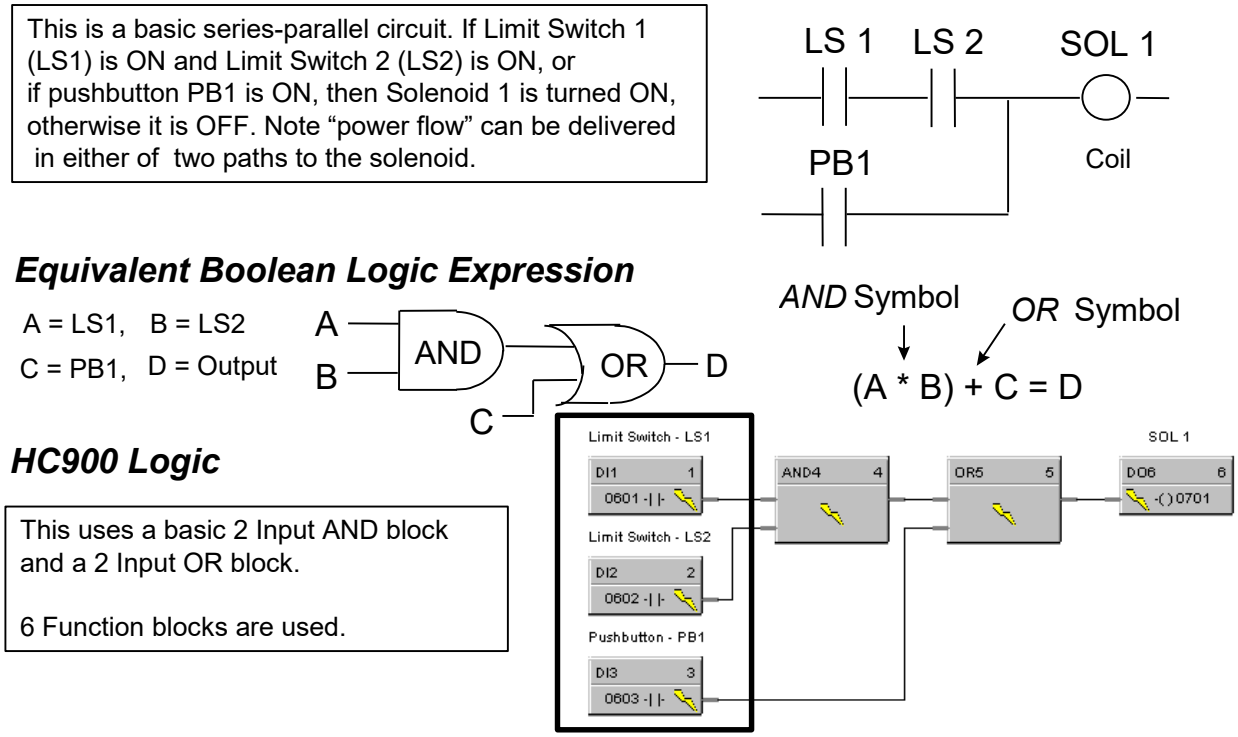

Figure 31 Digital input function block example

DIGIMP Safety Digital Import Function Block

Description

The DIGIMP label is short-hand for the Safety Digital Import block.

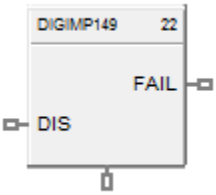

This block belongs to the Communications category and is only available on SIL certified devices, such as the C30S, C50S, C70S, and C75S using version 6.3x or above.

Function

The Safety Digital Import block is a communication block that allows a configuration to import selected digital signals from other external configurations. These signals are exported within an XML file generated by selecting the "Safety Peer Export Enable" option within the Signal Dialog, and then saving the configuration. The XML is saved with the configuration filename, with the '.xml' file extension. With this block, a user is able to share signals between multiple configurations. The Safety Digital Import block has one output for FAIL. The Safety Digital Import block allows the user to set a Failsafe Option for "Off" or "On" or to "Hold" current value.

Similar to how a 'Connector' functions, the user cannot import a 'Process' signal (non-highlighted signal) into 'Safety' worksheet. The user is able to import a 'Safety' signal (yellow highlighted) into a 'Process' sheet however.

Inputs

DIS – DIS is the Disable pin that disables the digital signal import updates between the two controllers. Attaching a 'high' signal to disable sends all signals imported from that controller into failsafe. Attaching the NO_SCAN pin of the corresponding SAFPDE block will associates the failsafe timeout action configured in the SAFPDE block to the DIGIMP block.

Outputs

FAIL – Failsafe pin to signal that the data has reached its stale limit

Block Properties

After adding a Safety Digital Import block, opening the properties will prompt the user to select a '.xml' file from a previously saved configuration with which to import a digital signal from.

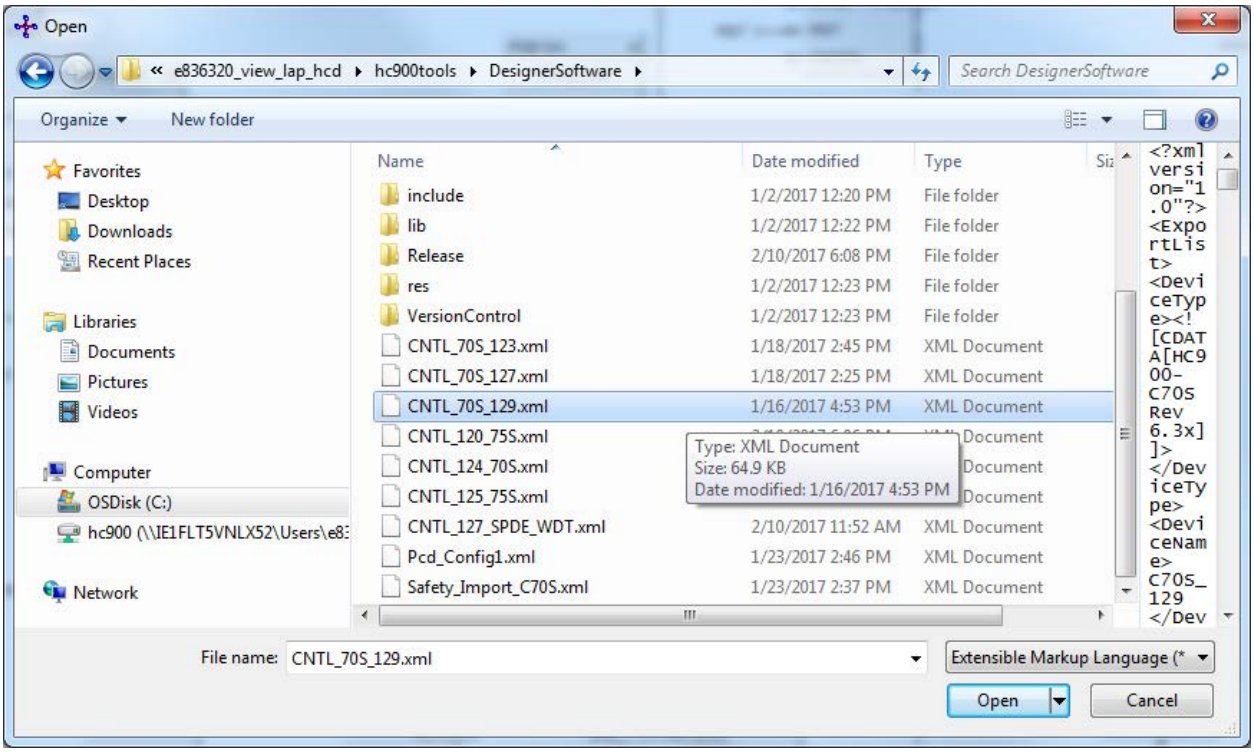

The above image shows several XML files that are automatically generated after saving a configuration.

After selecting the '.xml' file, the following screen is shown to allow the user to select the digital signal to import:

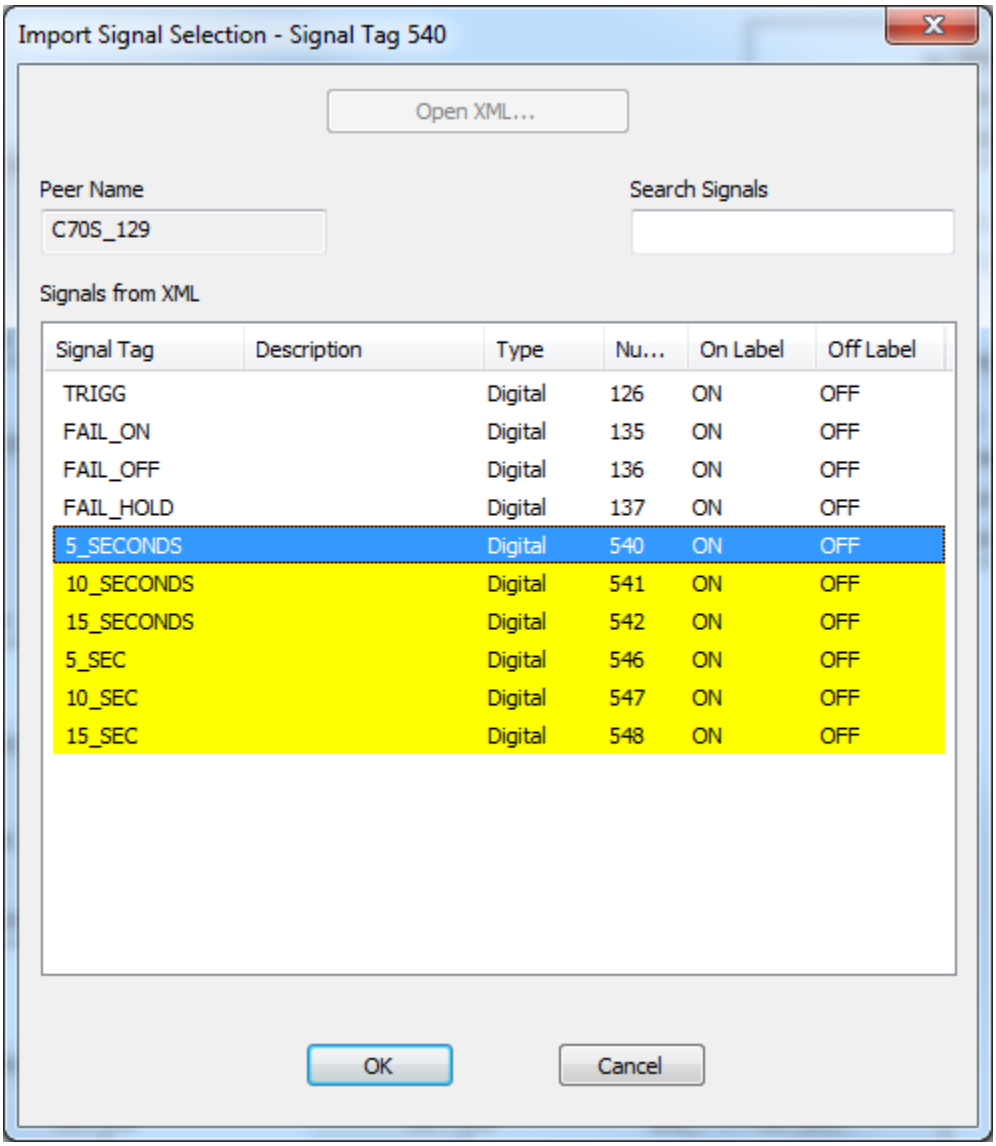

The Safety Digital Import have a ‘Signal Tag’, ‘Description’, ‘Type’, external signal ‘Number’, ‘On Label’ and an ‘Off Label’.

Once a signal is selected, and ‘OK’ is pressed, the block will hold the information from the previous dialog, as shown below:

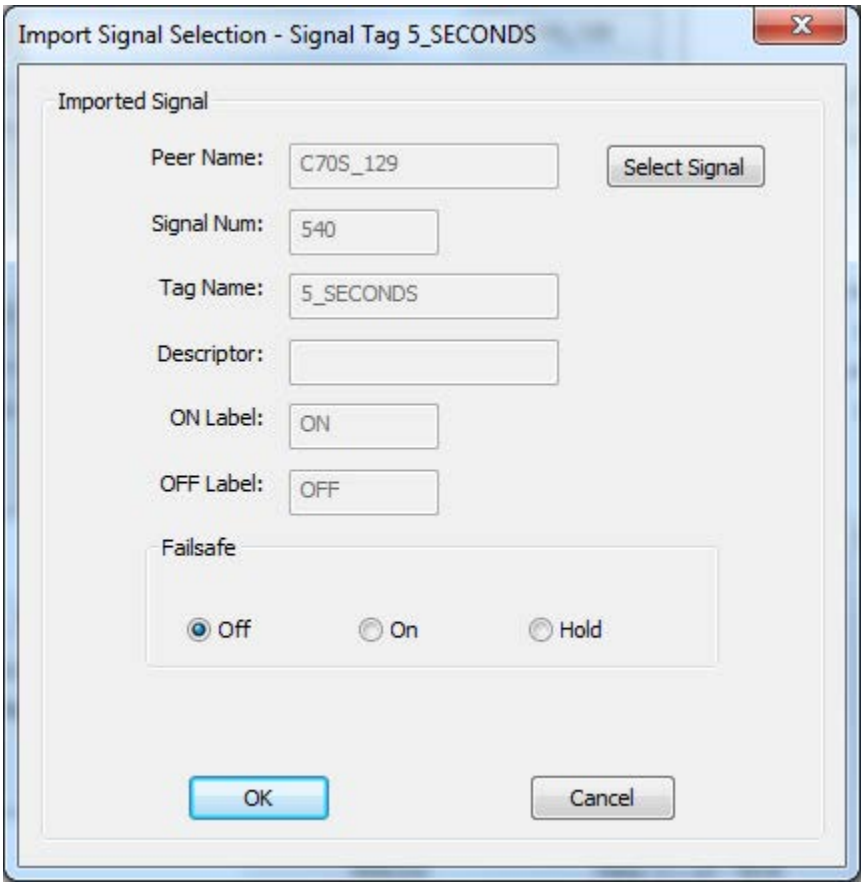

The Digital Import block now configured.

Configuration Parameters

In the properties page, the user is able to configure the failsafe options for the block only. The user can choose Failsafe to be 'Off', 'On', or 'Hold', which continues to output the last known good value.

Parameter	Index #	Parameter Description	Value Or Selection	Default
Failsafe	N/A	Action to be taken when the block goes to fail. Hold – output will hold to last good state OFF – output will go to OFF state ON – output will go to ON state	Click on radio button to select	OFF

Related Function Blocks

SAFPDE – Safety Peer Monitor block

Digital Input Voting

Description

The DI-V label stands for Digital Input Voting.

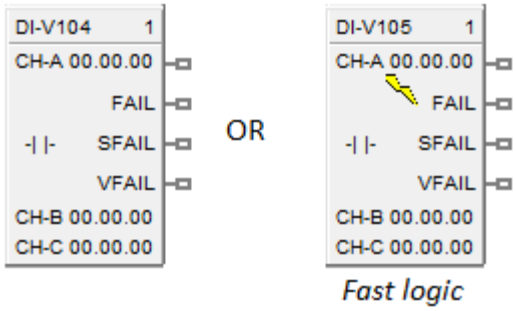

This block is part of the *I/O Blocks* category.

Function

Provides the digital status of a digital input point and provides interface to other algorithms and functions.

The output status may be inverted.

If Digital Point is ON, then OUT = ON

DI-V differs from the DI block in that multiple inputs (up to 3) may be specified, and the values of the inputs (whose channel has not failed) must match for the input value to be considered good overall. Otherwise the FAIL pin becomes ON and the Fail-safe value is used as output instead of any input value. If there is only one input used, then the state of the single channel determines the state of the FAIL pin.

If none of the inputs are used (i.e. all three are not enabled by user), the function block will use the Fail-safe value as output.

Please refer to the descriptions of the FAIL, SFAIL, and VFAIL pins below to get a good understanding of the block behavior.

Input

Digital value(s) from specified real I/O address(s).

Output

OUT = Digital signal.

FAIL = Failed – If ON, indicates that the block output is set to Fail-safe. Possible cause for this is:

In cases where <u>three inputs</u> are used:

One input has a failed channel and the good channels have a validation failure.

OR

All three inputs have failed channels.

In cases where <u>two inputs</u> are used:

Two inputs have good channels and a validation failure.

OR

Both inputs have failed channels.

SFAIL = Source Failure – If ON, indicates a failure of one or more of the digital channel(s). Possible cause for this is:

Power failure

One of the DI channels failed

VFAIL = Validation Failure – If ON, indicates that the values of the “good” channels disagree.

Block properties

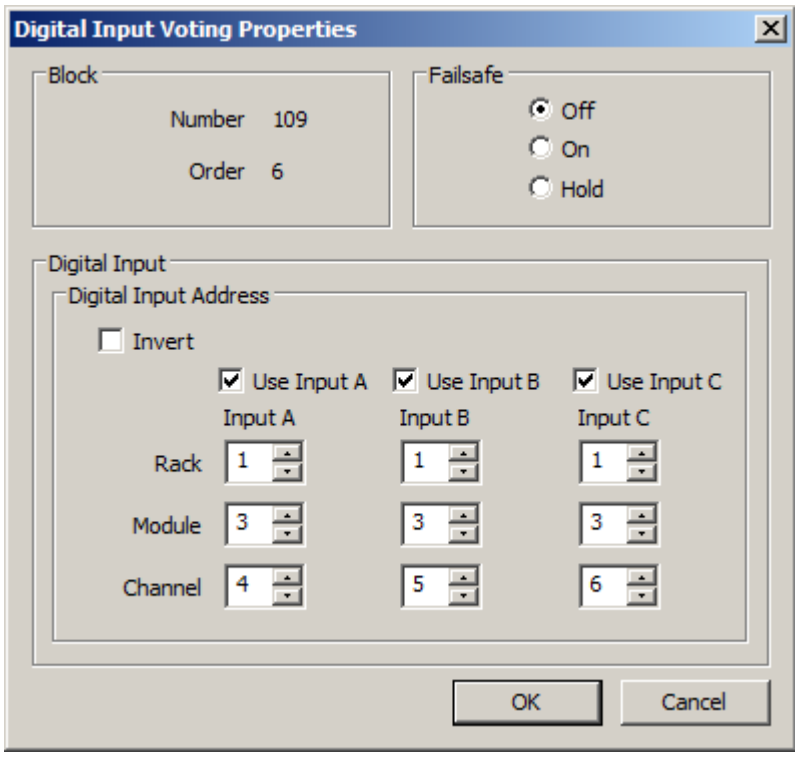

Double click on the function block to access the function block properties dialog box.

Configuration parameters

Properties Group	Parameter	Index #	Parameter Description	Value or Selection
Block	Order	N/A	Execution Order for Block To change, See "Execution Order".	Read Only.
Digital Input Address	Use Input A	4	Enable or Disable Input A	Click on checkbox to select or deselect
	Use Input B	5	Enable or Disable Input B	Click on checkbox to select or deselect
	Use Input C	6	Enable or Disable Input C	Click on checkbox to select or deselect
	Rack (for each Input)	N/A	This is the address of the selected Rack.	Enter a value: from 1 to 5.
	I/O Module (for each Input)	N/A	Address of selected I/O module	Enter a value: from 1 to 12
	Channel (for each Input)	N/A	Channel on selected I/O Module	Enter a value:1 to 16, depending on module type.
	Invert	N/A	If INVERT is selected, OUT = inverse of physical input. The slash will be present in the CONTACT symbol only when the invert box is selected on the dialog box.	Click on checkbox to select or deselect
Failsafe	Failsafe - Off	N/A	Sets the output of the block to OFF when failure is detected. This is the only failsafe option available if the block is on a safety worksheet.	Click on Radio button to select.
	Failsafe - On	N/A	Sets the output of the block to ON when failure is detected.	Click on Radio button to select.
	Failsafe - Hold	N/A	Holds the output at the last value just prior to the failure being detected.	Click on Radio button to select.

Example

Figure 01 below shows a function block diagram using a DI-V function block. The AI block reads in analog input values from real I/O addresses, and then passes the calculated value to the PID block, for it to control the value, to be then output to real I/O addresses by the AO block. The DI-V block is used to read in the digital signal for the TRC pin on the PID block.

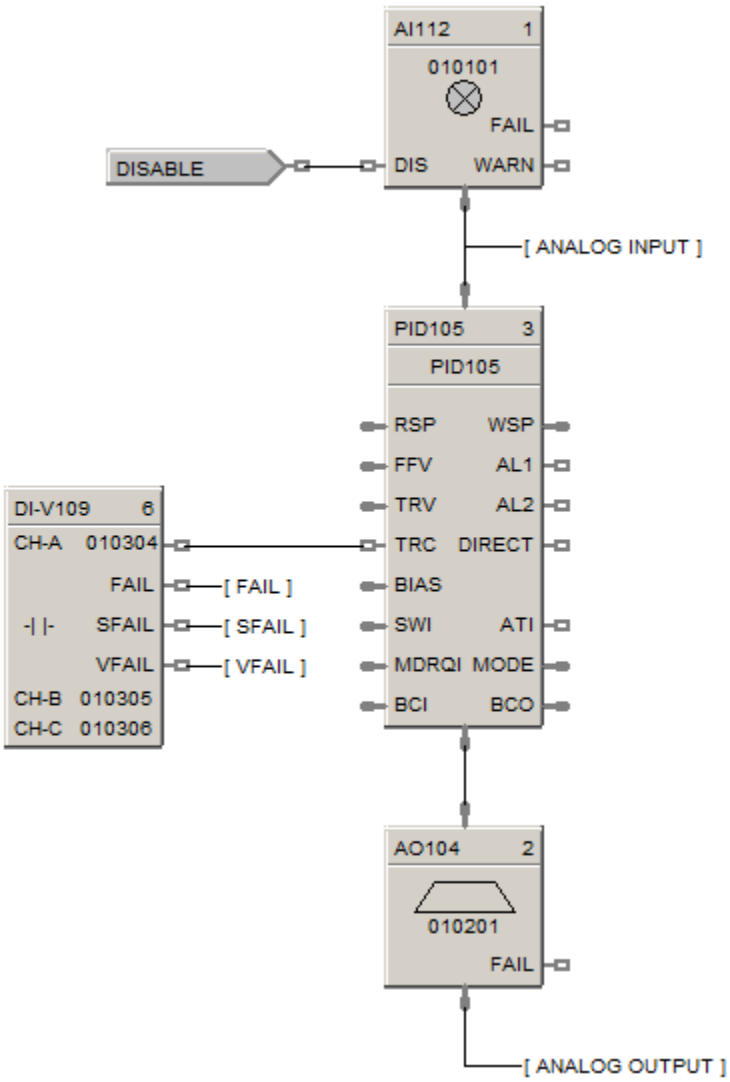

8DI Function Block

Description

The 8DI label stands for Eight Point Digital Inputs.

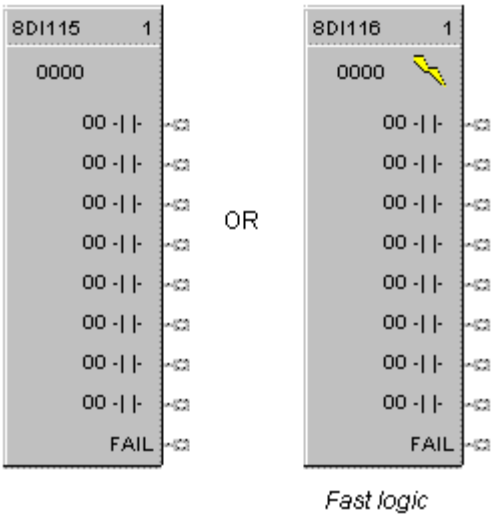

This block is part of the *I/O Blocks* categories.

Function

Provides read access for up to 8 physical digital inputs.

It minimizes the number of blocks required to configure all of the Digital I/O required in a system. Digital input blocks are used to process the digital status of specific channels of a digital input module. Each block input requires a module and channel number during configuration.

The Input status may be inverted.

If Digital Point is ON, then OUT = ON.

Output

OUT D1= Digital Signal
OUT D2= Digital Signal
OUT D3= Digital Signal
OUT D4= Digital Signal
OUT D5= Digital Signal
OUT D6= Digital Signal
OUT D7= Digital Signal
OUT D8= Digital Signal

Block properties

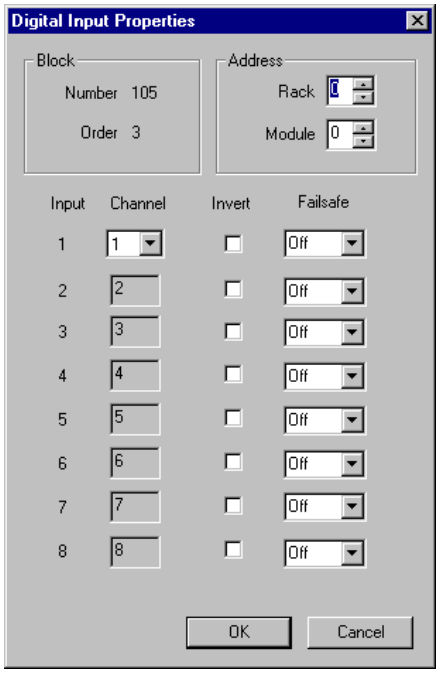

Double click on the function block to access the function block properties dialog box.

Configuration parameters

Table 44 Eight Digital input configuration parameters

Properties Group	Parameter	Index #	Parameter Description	Value or Selection
Input 1 through Input 8	**Rack**	0	Rack Address of selected I/O Module	From 1 to 12
	I/O Module		Address of selected I/O Module	From 1 to 12
	Channel		Channel on selected I/O Module	1 to 8, 9 to 16, 17 to 24, 25 to 32
		1	If INVERT is selected, OUT = inverse of physical input. The slash will be present in the CONTACT symbol only when the invert box is selected on the dialog box. (See below.) 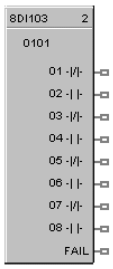	

Failsafe	**Failsafe ON**	N/A	set the output of the block to OFF when failure is detected.	Select from drop-down menu for each input.
	Failsafe OFF	N/A	set the output of the block to ON when failure is detected.	
	Failsafe HOLD	N/A	hold the output at the last value just prior to the failure being detected.	

Example

Figure 32 shows a Function Block Diagram using 8 point DI function blocks.

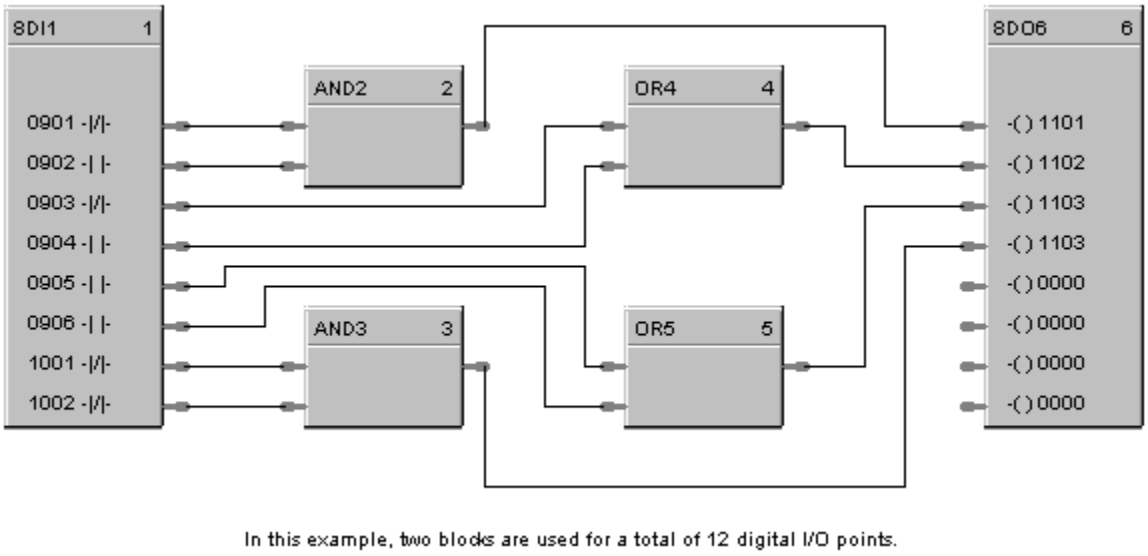

Figure 32 8Point DI function block example

DIV Function Block

Description

The **DIV** label stands for **Division** Mathematical operation.

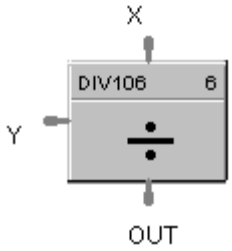

This block is part of the *Math* category.

Function

Divides one input (X) by another (Y)

- If Y = 0, then OUT = 0 and block status is set to error; otherwise, **OUT = X ÷ Y.**

Input

X = First analog value
Y = Second analog value

Output

OUT = Calculated Value

Block properties

Double click on the function block to access the function block properties dialog box.

Block Order (Read Only)

To change Execution Order for the Block, Select on the Function Block Diagram tool bar. Select ”Execution Order” then select and drag blocks up or down the list and put them in the order that suits your control strategy.

Example

Figure 33 shows a Function Block Diagram using a DIV function block.

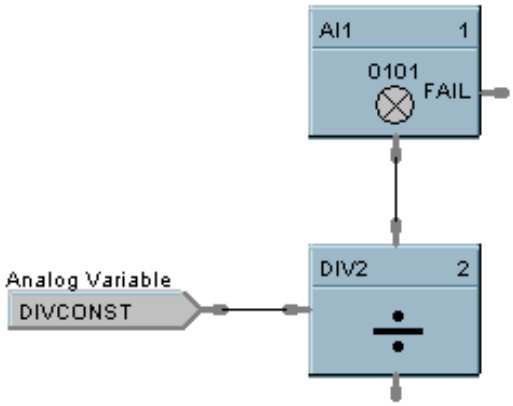

Figure 33 DIV function block example

DLAY Function Block

Description

The DLAY label stands for On Delay/Off Delay Timer.

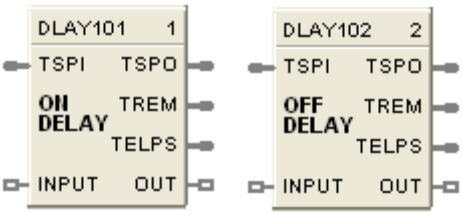

This block is part of the *Counters and Timers* categories.

Function

Block is configurable as On Delay or Off Delay.

For On Delay, output turns ON when timer expires.

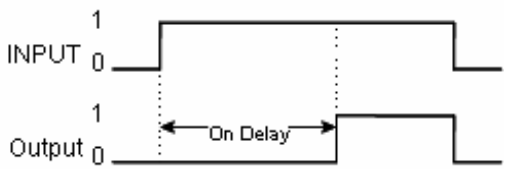

For Off Delay, output turns OFF when timer expires.

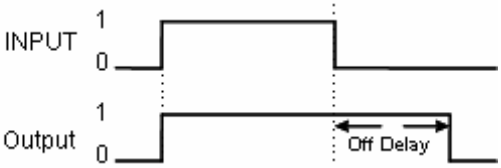

Input

TSPI - Delay time set point in seconds.

INPUT - Edge detection starts the timer. ON delay timer is triggered by rising edge of input. OFF delay timer is triggered by falling edge of input.

Output

TSPO - Timer set point in seconds. Based on the TSPI pin at the point when the timer started. If TSPI changes after the timer starts, TSPI is ignored and TSPO maintains the current timer set point.

TREM - Remaining time in seconds; counts from TSPI down to 0.

TELPS - Elapsed time in seconds; counts from 0 to TSPI.

OUT - For On Delay, output turns ON when timer expires. For Off Delay, output turns OFF when timer expires.

Block properties

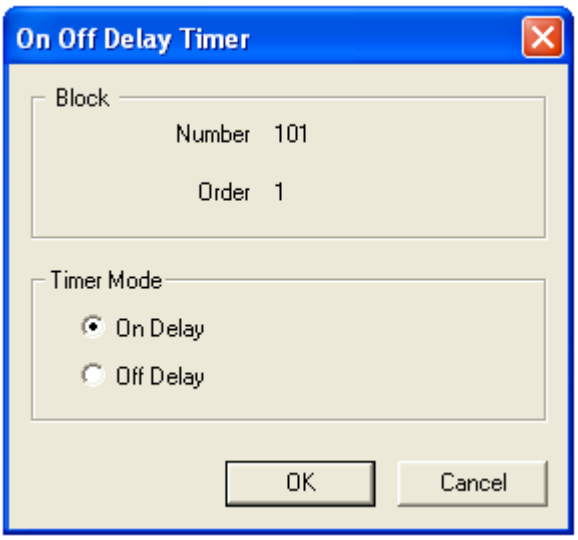

Double click on the function block to access the function block properties dialog box.

Configuration parameters

Table 45 On Delay/Off Delay configuration parameters

Properties Group	Parameter	Index #	Parameter Description	Value or Selection
Timer Mode	**On Delay** **Off Delay**	N/A	On Delay: output turns ON after countdown from TSPI value. Off Delay: output turns OFF after countdown from TSPI value. The block's graphic indicates the type of delay. See figures above.	Click Radio Button to select.

DO Function Block

Description

The **DO** label stands for **Digital Output.**

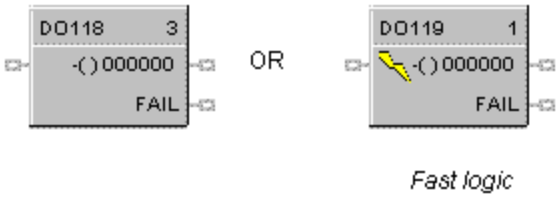

This block is part of the *I/O Blocks* categories.

Function

Provides a digital status from the algorithms and functions to physical logic output hardware. Each block requires a module and channel number during configuration. The output status may be inverted.

Input

X = Input Status Signal

Output

FAIL = Failed Output Indication - Module Error

Block properties

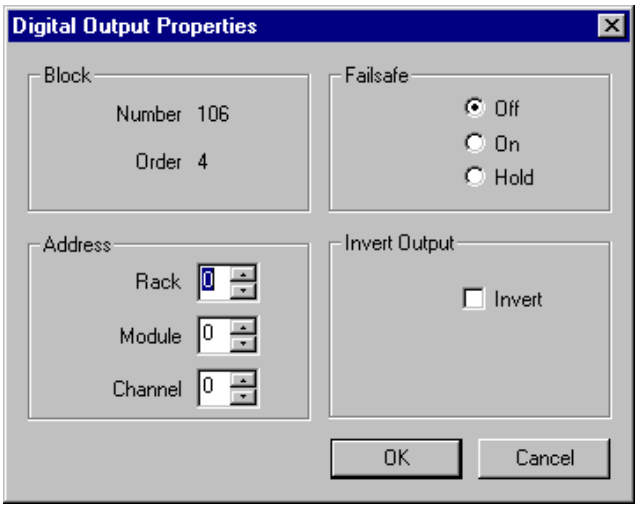

Double click on the function block to access the function block properties dialog box.

Configuration parameters

Table 46 Digital output configuration parameters

Properties Group	Parameter	Index #	Parameter Description	Value or Selection
Address	**Rack**	N/A	Rack Address of selected I/O Module	From 1 to 12
	I/O Module		Address of select I/O Module	From 1 to 12
	Channel		Channel on selected I/O Module	From 1 to 32 depending on the physical module type DC = 16 or 32 AC = 8 Relay = 4
Failsafe	**Failsafe ON**	N/A	set the output of the block to OFF when failure is detected.	Click on radio button to select.
	Failsafe OFF	N/A	set the output of the block to ON when failure is detected.	Click on radio button to select.
	Failsafe HOLD	N/A	hold the output at the last value just prior to the failure being detected.	Click on radio button to select.
		1	If INVERT is selected, Invert IN before writing to output The slash will be present in the COIL symbol only when the invert box is selected on the dialog box. (See below.) 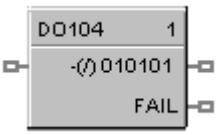	

Example

Figure 34 shows a Function Block Diagram using a DO function block. A digital output signal from PID block AL1 will turn the Digital Output block ON & OFF for remote alarming. This output could be OR'd with other alarm outputs if going to a common alarm relay.

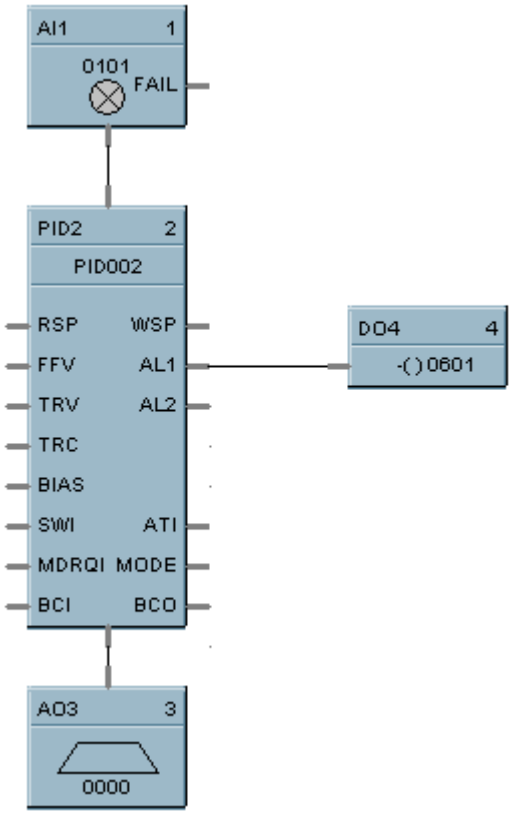

Figure 34 DO function block example

Digital Output Validated

Description

The DO-V label stands for Digital Output Validated.

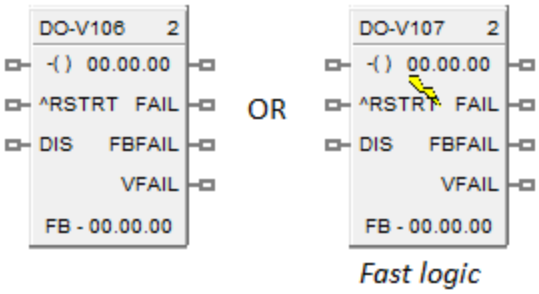

This block is part of the *I/O Blocks* category.

Function

Provides a digital status from the algorithms and functions to physical logic output hardware. The digital status is fed back to DI feedback channel for validation. Each DO block and feedback DI requires a module and channel number during configuration. The output status for DO and feedback DI channel may be inverted.

Input

X = Input Status Signal

^RSTRT = Restart Signal – When used, a positive (rising) input pulse releases OUT from its failsafe value and FAIL pin from its ON state. If ^RSTRT pin is left unconnected, the function block's OUT and FAIL pins will not latch the status. This allows for the replacement or repair of the failed DO module or failure condition and operator controlled release.

DIS = Disable Signal – When used and made ON, disables the DO Channel and also results in disabling of ^RSTRT functionality. If DIS pin left unconnected or made OFF, results in Normal Operation i.e. it enables the function block.

Output

OUT = Physical output value of function block

FAIL = Failed Output Indication – DO module has an error. OUT is set to failsafe (OFF - for safety worksheet and selectable for process worksheet).

FBFAIL = Feedback Fail – Feedback DI module fail. OUT continues to function without feedback validation.

VFAIL = Validation Fail – Input does not match output status i.e. the value read does not equal the value written. If DI module has an error, VFAIL will stay OFF. OUT continues to function without feedback validation.

Block properties

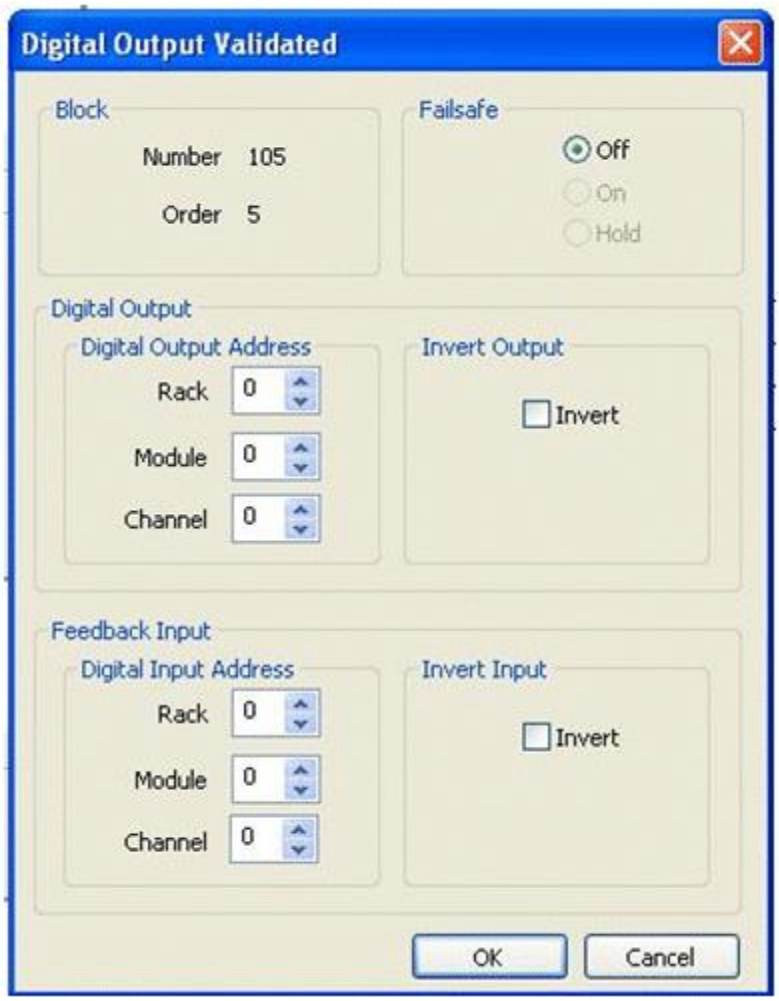

Double click on the function block to access the function block properties dialog box.

Configuration parameters

Properties Group	Parameter	Index #	Parameter Description	Value or Selection
Address	Rack	N/A	Rack address of selected DO module	From 1 to 12
	I/O Module		Address of selected DO module	From 1 to 12
	Channel		Channel number on selected DO module	From 1 to 32, depending on the physical module type – DC or AC or Relay
Failsafe	ON	N/A	Set the output of the block to ON when failure is detected	Click on radio button to select (Applicable to process worksheet only)
	OFF	N/A	Set the output of the block to OFF when failure is detected	OFF (for safety worksheet) Click on radio button to select (for process worksheet only)
	HOLD	N/A	Hold the output at the last value just prior to the failure being detected	Click on radio button to select (Applicable to process worksheet only)
Invert	Invert	1	If invert is selected, invert IN before writing to output. The slash will be present in the COIL symbol only when the invert box is selected on the dialog.	
Address	Rack	N/A	Rack address of selected feedback DI module	From 1 to 12
	I/O Module		Address of the selected feedback DI module	From 1 to 12
	Channel		Channel number on the selected feedback DI module	From 1 to 32
FB Invert	FB Invert	4	If FB invert is selected, feedback value is an inverse of applied value.	

Example

Figure 35 below shows a function block diagram using a DO-V function block. A digital output signal (AL1) will turn the digital output for DO-V block ON and OFF for monitoring. The feedback fail (FBFAIL) and validation fail (VFAIL) are also used for monitoring the statuses. The connection to “RSTRT” pin ensures that the status on OUT and FAIL pins will remain latched, until a positive (rising) edge is detected on “RSTRT” pin.

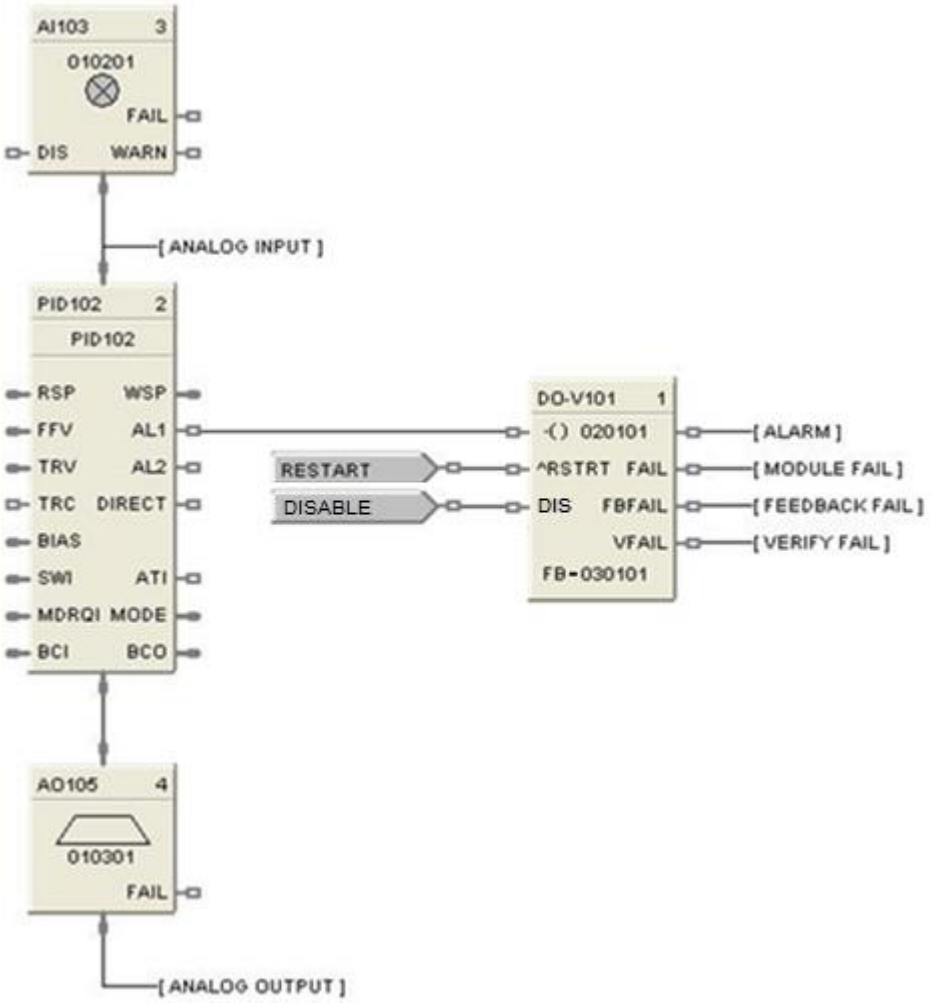

Figure 35 DO-V function block

8DO Function Block

Description

The 8DO label stands for Eight Point Digital Outputs.

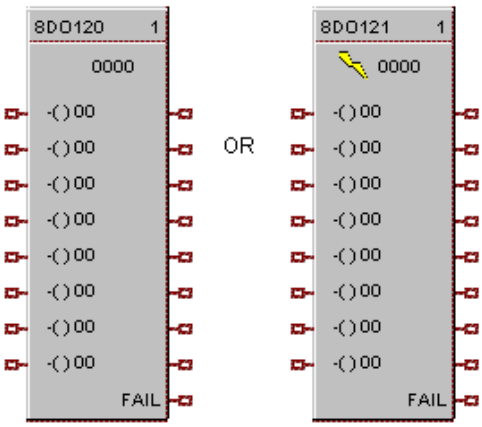

Fast logic

This block is part of the *I/O Blocks* categories.

Function

Provides write access to any physical digital output. (All read at the same time) It minimizes the number of blocks required to configure all of the digital I/O required in the system. It provides a digital status from the algorithms and functions to physical logic output hardware. Each block output requires a module and channel number during configuration. The output status may be inverted.

Input

IN D1 = Input Status Signal
IN D2 = Input Status Signal
IN D3 = Input Status Signal
IN D4 = Input Status Signal
IN D5 = Input Status Signal
IN D6 = Input Status Signal
IN D7 = Input Status Signal
IN D8 = Input Status Signal

Output

FAIL = Failed Output Indication - Module Error

Note: Write Coil instructions are not supported for outputs configured in the 8 DO FB in controllers of version 4.4xx or earlier. Use single DO FB when executing write coils to ControlEdge HC900 outputs.

Block properties

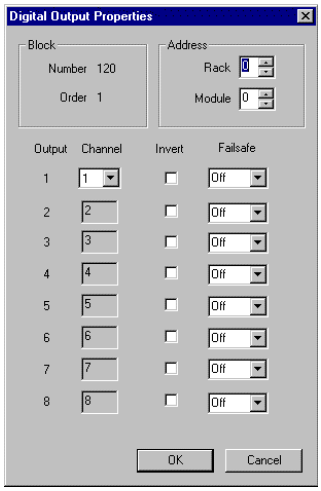

Double click on the function block to access the function block properties dialog box.

Configuration parameters

Table 47 Eight Digital output configuration parameters

Properties Group	Parameter	Index #	Parameter Description	Value or Selection
Output 1 through 8	**Rack**	N/A	Rack address of selected I/O Module	From 1 to 12
	I/O Module		Address of select I/O Module	From 1 to 12
	Channel		Channel on selected I/O Module	1 to 8, 9 to 16, 17 to 24, 25 to 32
			NOTE: ***If you don't want to use an output pin, leave the Module # and Channel # at 0.***	
Failsafe	**Failsafe ON**	N/A	set the output of the block to OFF when failure is detected	Select from drop-down menu for each Output.
	Failsafe OFF	N/A	set the output of the block to ON when failure is detected	
	Failsafe HOLD	N/A	hold the output at the last value just prior to the failure being detected	
		1	If INVERT is selected, Invert IN before writing to output The slash will be present in the COIL symbol only when the invert box is selected on the dialog box. (See below.)	

Example

Figure 36 shows a Function Block Diagram using a 8 Point DO function block.

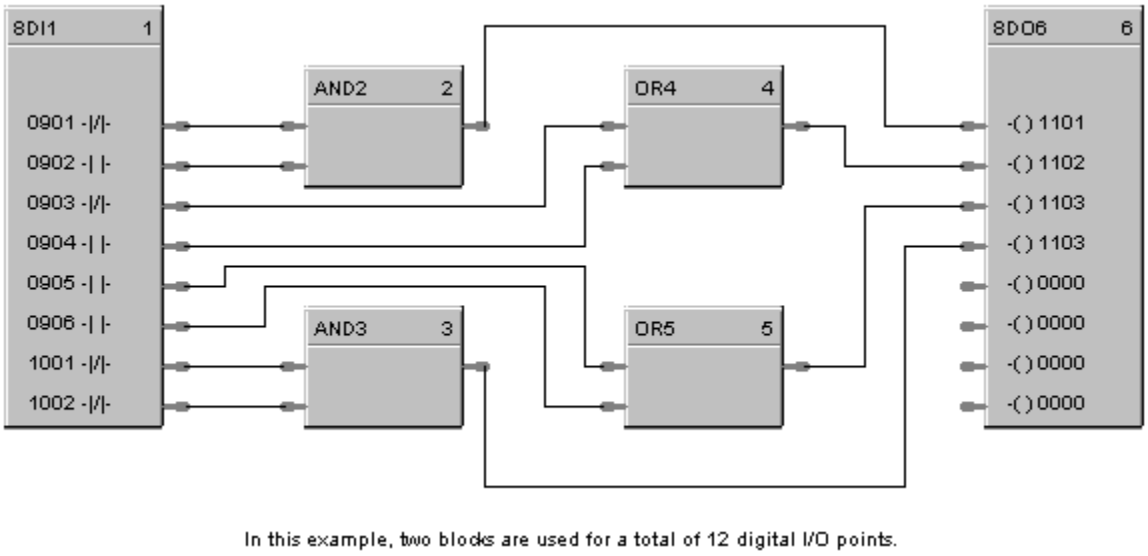

Figure 36 8 Point DO function block example

DSW Digital Switch Function Block

Description

The **DSW** label stands for **Digital Switch.**

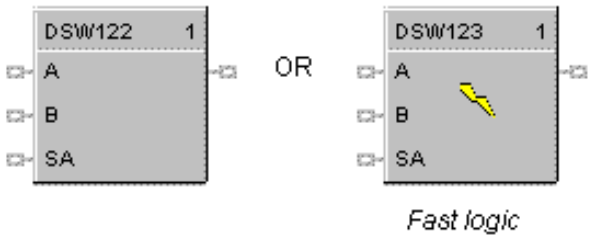

This block is part of the *Logic* and *Fast Logic* categories.

Function

Sets the output of the block equal to either input A or Input B depending on the value of input SA. If input SA (Select A) is ON, then OUT = Input A, otherwise OUT = Input B.

Input

A = 1st of two inputs to select from.

B = 2nd of two inputs to select from.

SA = Select A

Output

Out = If SA is ON, then A, else B.

Block properties

Double click on the function block to access the function block properties dialog box.

Example

Figure 37 shows an example of a DSW function block. The output is switched **between two digital inputs** based on the ON or OFF state of the **control input**. Output = A input state when SA input is OFF and B input state when SA input is ON.

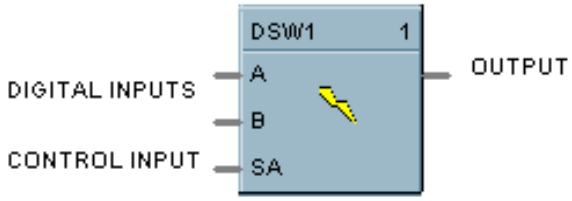

Figure 37 DSW function block example

ENTH Humidity and Enthalpy Function Block

Description

The **ENTH** label stands for Humidity and Enthalpy. This block is part of the *HVAC* category.

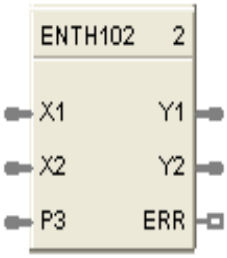

Function

This block calculates the Absolute Humidity and Enthalpy based on the input Air temperature (X1), Air relative Humidity (X2) and Barometric Pressure (P3). This block does not have any configurable parameters. ERR pin turns ON when any of the inputs (X1, X2, P3) or outputs (Y1, Y2) are out of range. In case of ERR ON, outputs Y1 and Y2 are set to 0.0.

Inputs

X1 = Air temperature in degrees F. Range is -40 – 140 degrees F.

X2 = Air relative humidity in % RH. Range is 1.0 – 99.9% RH.

P3 = Barometric Pressure in psi. Range is 12.5 – 15.7 psi. When this is not connected the default value is 14.696 psi.

Outputs

Y1 = Enthalpy

Y2 = Absolute humidity

ERR = ON when any input or output is out of range. Outputs Y1 and Y2 are set to 0.0.

Configurable Parameters

This block has no configurable parameters.

Example

Calculate enthalpy (0 – 100 btu/lb) and absolute humidity (0 to 100 lb/lb) as a function of air temperature, relative air humidity, and air pressure.

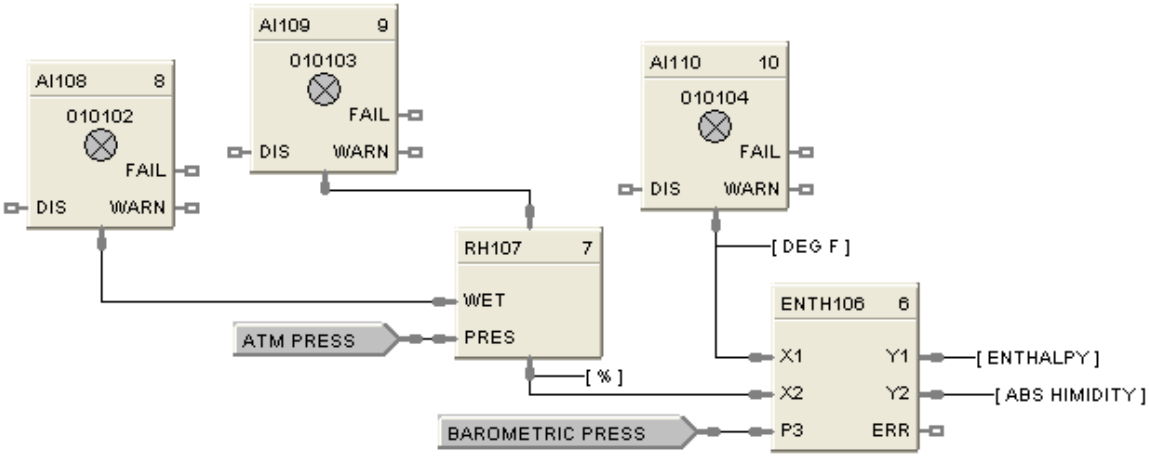

Figure 38 ENTH function block example

FGEN Function Generator Function Block

Description

The FGEN label stands for Function Generator - 10 Segment.

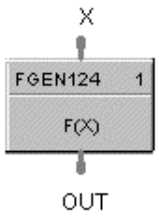

This block is part of the *Auxiliary* category.

Function

Generate output characteristic curve based on up to 11 configurable “Breakpoints” for both input (X) and Output (OUT) values.

OUT = interpolation of OUT (Yb) values for segment in which X falls.

- If X <= X (1), then OUT = OUT (1)
- If X >= X (11), then OUT = OUT (11)

ATTENTION

The X(n) value must be < X(n+1) value. Thus, if fewer than 11 breakpoints are needed, be sure to configure any unneeded breakpoints with the same X and OUT values used for the previous breakpoint.

Input

X = Analog Value

Output

OUT = Calculated Analog Value

Block properties

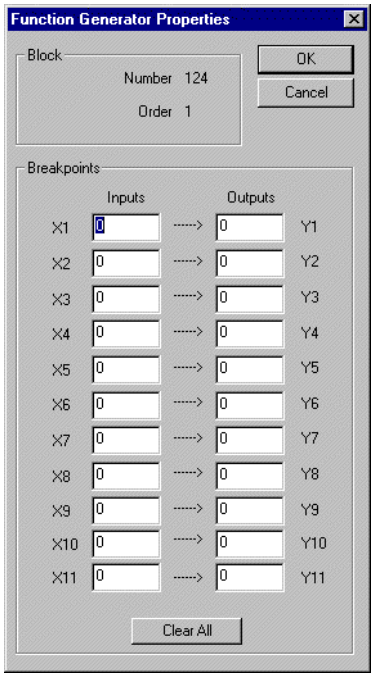

Double click on the function block to access the function block properties dialog box.

Configuration parameters

Table 48 Function generator configuration parameters

Properties Group	Parameter	Index #	Parameter Description	Value or Selection
Block	**Block Order**		Execution order of the block.	Read Only. To change block order, right-click on a Function Block and select Execution Order.
Breakpoints	**X1**	0	X-value at Input Breakpoint 1	–99999 to 999999
	X2	1	X-value at Input Breakpoint 2	–99999 to 999999
	X3	2	X-value at Input Breakpoint 3	–99999 to 999999
	X4	3	X-value at Input Breakpoint 4	–99999 to 999999
	X5	4	X-value at Input Breakpoint 5	–99999 to 999999
	X6	5	X-value at Input Breakpoint 6	–99999 to 999999
	X7	6	X-value at Input Breakpoint 7	–99999 to 999999
	X8	7	X-value at Input Breakpoint 8	–99999 to 999999
	X9	8	X-value at Input Breakpoint 9	–99999 to 999999
	X10	9	X-value at Input Breakpoint 10	–99999 to 999999

Properties Group	Parameter	Index #	Parameter Description	Value or Selection
	X11	10	X-value at Input Breakpoint 11	–99999 to 999999
	Y1	11	Y-value at Output Breakpoint 1	–99999 to 999999
	Y2	12	Y-value at Output Breakpoint 2	–99999 to 999999
	Y3	13	Y-value at Output Breakpoint 3	–99999 to 999999
	Y4	14	Y-value at Output Breakpoint 4	–99999 to 999999
	Y5	15	Y-value at Output Breakpoint 5	–99999 to 999999
	Y6	16	Y-value at Output Breakpoint 6	–99999 to 999999
	Y7	17	Y-value at Output Breakpoint 7	–99999 to 999999
	Y8	18	Y-value at Output Breakpoint 8	–99999 to 999999
	Y9	19	Y-value at Output Breakpoint 9	–99999 to 999999
	Y10	20	Y-value at Output Breakpoint 10	–99999 to 999999
	Y11	21	Y-value at Output Breakpoint 11	–99999 to 999999
Clear All Button		Click on button to clear all breakpoint values.		

Examples

Figure 39 shows a function block diagram using a FGEN function block to characterize the PID control loop output for control valve operation using 9 breakpoints.

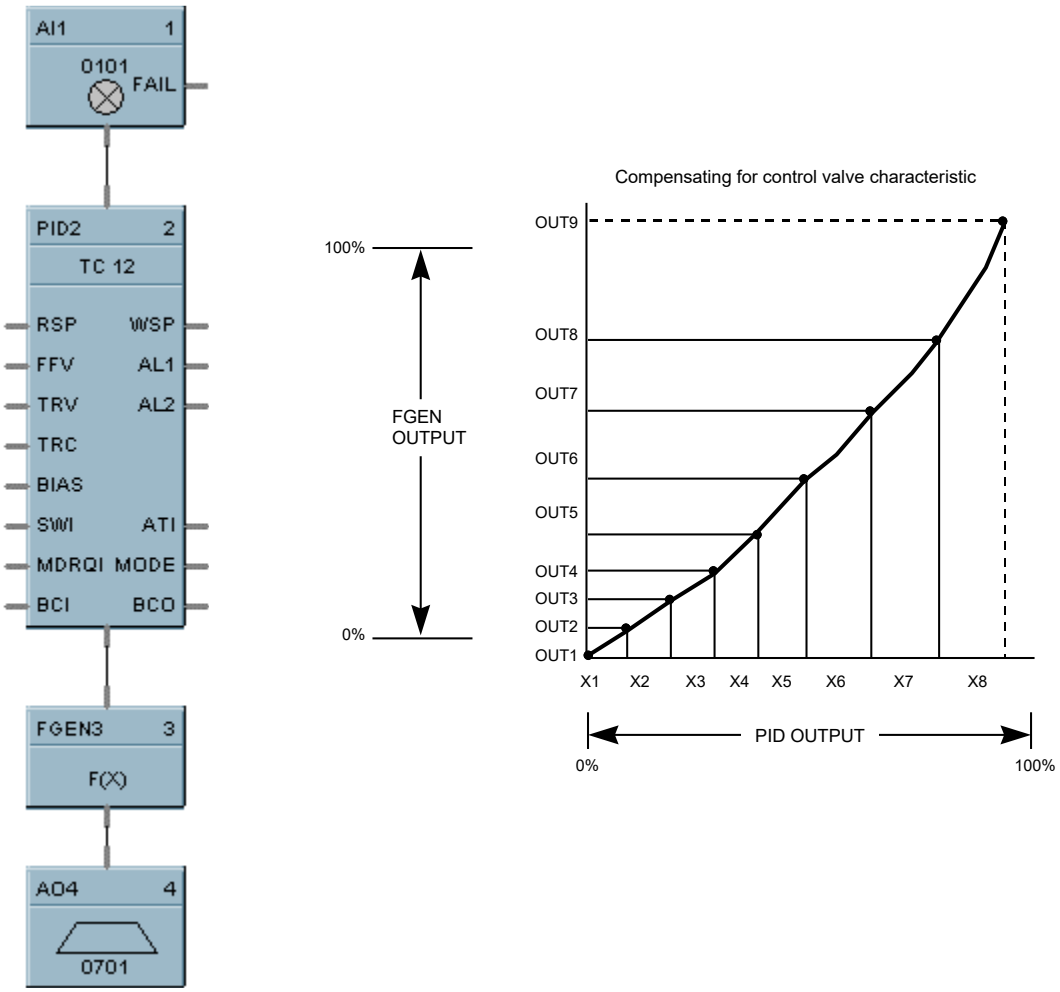

Figure 39 FGEN function block example

FI Frequency Input

Description

The **FI** label stands for **Frequency Input**.

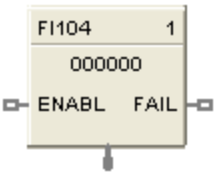

This block is part of the *I/O Blocks* category.

Function

The function is used for measuring speed and rate. It reads a single frequency channel from a Pulse/Frequency/Quadrature input module. The signal is scaled from the selected frequency span to the selected output range in engineering units, providing an output value in engineering units.

The input signal is rejected if it is below a selected pulse width. The frequency of pulses above this width must be within the range specified by Pulse Width (Range); otherwise the output goes to failsafe and a failure-to-convert error occurs.

Input

ENABL = Level input to enable block. Input is ignored if not connected and default state is enabled. If block is disabled the output goes to zero.

Output

FAIL = A Boolean value that turns ON when the Pulse/Frequency/Quadrature input module reports a failure.

OUT = The frequency input value scaled to engineering units (after filters, ranges, bias, or failsafe conditions have been applied).

$$\text{OUT} = \left(\frac{\text{Frequency In - Frequency Span Low}}{\text{Frequency Span High - Frequency Span Low}}\right) * \left(\text{Output EU High - Output EU Low}\right) + \text{Output EU Low} + \text{Bias}$$

The generic forcing of outputs is permitted.

Example

Say you configure the block as follows.

Pulse Width (Range) = 500µsec (10Hz-500Hz)

Frequency Span Low = 50Hz

Frequency Span High = 450Hz

Output range in EU = 0 - 100

Bias = 8

Failsafe = Upscale (upper output range)

Assume the module is receiving a 255Hz signal, including noise. Assume 2% of pulses are noise, that is, are less than the minimum pulse width 500 µsec. The block rejects this 2% and does not count them in the frequency. The remaining 98% valid pulses are counted, which is an effective signal of 250Hz. From the output equation above,

OUT = [(250–50) / (450-50)] * (100 – 0) + 0 + 8

= [200/400] * 100 + 8

= 0.5 * 100 + 8

= 50 + 8

= 58 EU

If the frequency of the effective signal (>500 µsec pulse width) changes to outside the specified range of 10-500Hz, a failure-to-convert error occurs and the output goes to failsafe, in this case upscale (100).

Configurable Parameters

Table 49 Frequency Input configuration parameters

Properties Group	Parameter	Index #	Parameter Description	Value or Selection
Block	**Order**	N/A	Execution Order for Block	Read Only. To change block order, right-click on a Function Block and select Execution Order.
Address	**Rack**	0	This is the rack address of the PFQ module.	Enter a value: from 1 to 12.
	Module	0	Module address of the PFQ module.	Enter a value: from 1 to 12.
	Channel	0	Channel on selected Module.	Enter a value: from 1 to 4
Frequency Span	**Set High Input (Hz)**	7	High frequency value of the input device. Exceeding this limit causes an over-range error.	Enter value in Hz.
	Set Low Input (Hz)	8	Low frequency value of the input device. Exceeding this limit causes an under -range error.	Enter value in Hz.
Output Range in EU	**High (EU)**	5	High range value. Frequency span in Hz is scaled to the output range in EU.	Enter value in EU.
	Low (EU)	6	Low range value. Frequency span in Hz is scaled to the output range in EU.	Enter value in EU.
Settings	**Bias**	2	Bias value added to the output.	Enter value in EU.
	Pulse Width (Range)	9	The input signal is rejected if it is below this pulse width. The frequency of pulses above this width must be in this frequency range; otherwise the output goes to failsafe and a failure-to-convert error occurs.	500µsec (10Hz-500Hz) 50µsec (10Hz-5KHz) 2.5µsec (10Hz-100KHz)
	Filter Time (sec)	1	Filter time constant in seconds.	Enter value in seconds.
Failsafe	**Use Value**	3	When FAIL is ON output is set to this value.	Click to select, enter a value.
	Up scale	4	When FAIL is ON output is set to Upper Range Limit.	Click to select.
	Down scale	4	When FAIL is ON output is set to Lower Range Limit.	Click to select.
	HOLD	4	When FAIL is ON output is held.	Click to select.

Example

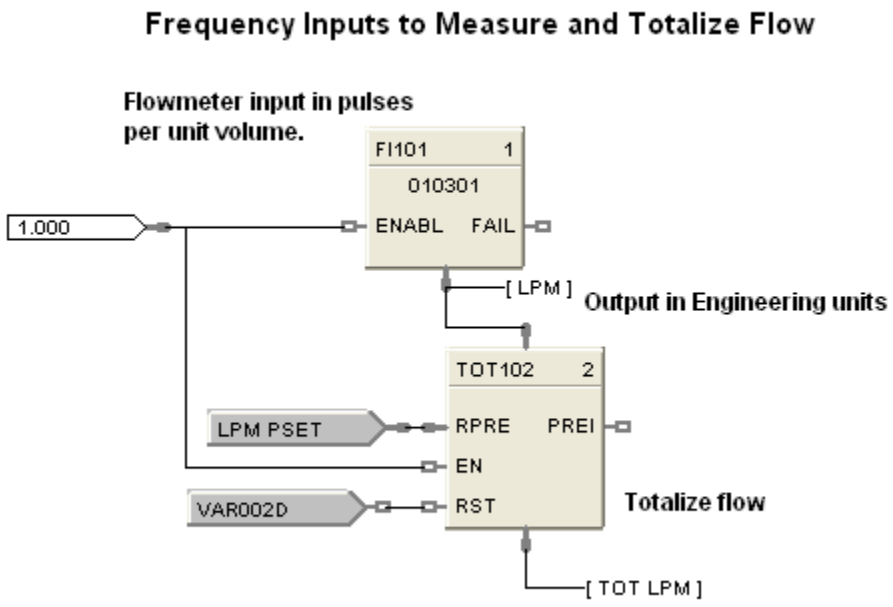

Figure 40 FI function block example

FMON Fault Monitor Function Block

Description

The **FMON** label stands for **Fault Monitor**.

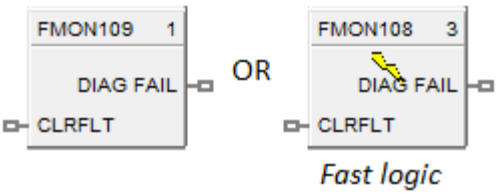

This block is part of the **Alarm/Monitory** category.

Function

The reaction on detected faults is configurable depending on the applications for which the ControlEdge HC900 is used. The FMON block has a fault clear input pin used for clearing all the faults generated and a fault output pin to display the selected diagnostic fail status. Each FMON function block requires a rack number, module number and a corresponding diagnostic to be selected during configuration, depending on the type of diagnostic group selected.

The rack number is specified as:

1 = Rack#1 (Main Rack)

2 = Rack#2 (Expansion Rack)

3 = Rack#3 (Expansion Rack)

4 = Rack#4 (Expansion Rack)

5 = Rack #5 (Expansion Rack)

Inputs

CLRFLT - ON = Clears all the existing faults.

- OFF = Leaves the existing faults in the current status.

Outputs

DIAG FAIL = Fail status of the selected diagnostic.

Block Properties

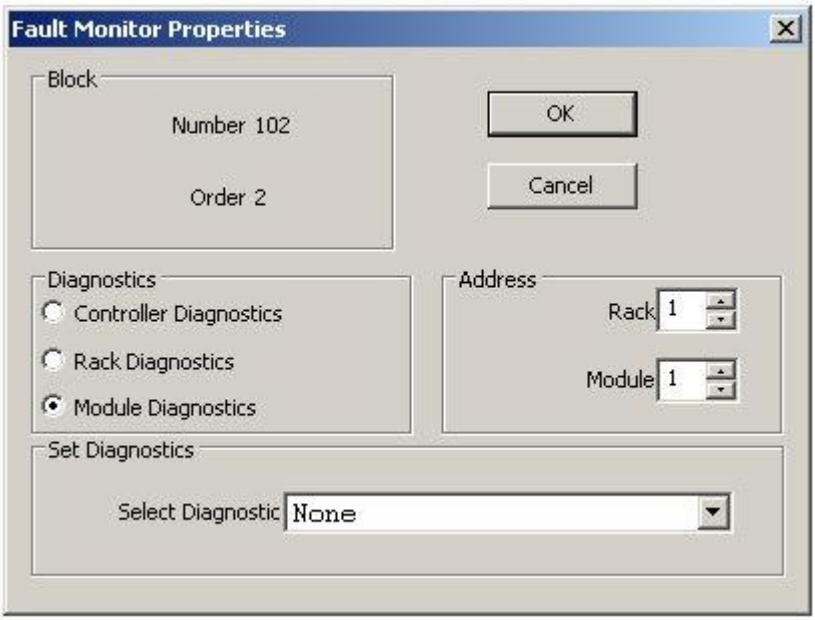

Double click on the function block to access the function block properties dialog box .

Configurable Parameters

Properties Group	Parameter	Index #	Parameter Description	Value or Selection
Address	Rack	N/A	Rack address of selected DO module	Enter a value: from 1 to 12
	I/O Module		Address of selected module	Enter a value: from 1 to 12
Diagnostics	Controller Diagnostics	N/A	Controller diagnostics group	Select one of the group diagnostics
	Rack Diagnostics		Rack diagnostics group	
	Module Diagnostics		Module diagnostics group	
Set Diagnostics	Select Diagnostic	N/A	Holds the diagnostic of the selected diagnostics group	Select one of the group diagnostic from the drop down list

Fault Monitor Block –Diagnostics List

Diagnostics Type	Diagnostics	Possible Cause
Controller	E1 Port	E1 port failure.
	E2 Port	E2 port failure.
	IO Port	IO port failure.
	Serial1	Serial port1 failure
	Serial2	Serial port2 failure
	R-Link	Failure of the redundancy link between the lead CPU and the redundant CPU
	Watchdog	Watchdog reset resulting from software failure.
	Battery1	Controller's battery1 Low
	Battery2	Controller's battery2 Low
	Mode Switch	Failure in the switch reading
	RTC Fail	Real Time Clock failed
	Power Supply	One of the redundant power supply modules failed
Rack Diagnostics	Any Module Error	One of the module diagnostics in the associated rack is set to WRONG MODULE, MODULE NO COMM (if the communications is failing due to the module not installed), BAD MODULE, or BAD CHANNEL.
	Any Module High Temperature	one of the two CJs on the module is indicating a temperature reading greater than 70 degrees C.
	No IO Communication	The Main CPU is unable to successfully communicate to an expansion rack that is in its configuration.
	Bad Scanner Version	The Main CPU determined that its software is not compatible with the scanner module.
	Power Supply	One of the redundant power supply modules failed.
Module Diagnostics	AI High CJ Temperature	AI module's one of the two CJs on the module is indicating a temperature reading greater than 70 degrees C.
	Wrong Module Installed	The module does not agree with the module required for the control scenario.
	No Module Communication	Main CPU is unable to communicate to the module for one of the following reasons: Module is not installed The module cannot communicate with the controller CPU or the expansion rack CPU because of a backplane problem. Module is on an expansion rack and the expansion rack communications are failing
	Bad Channel	One or more channels in the module are bad
	Bad Module	Module is bad. Module LED flashes to indicate the problem.

FRCP Force Present Function Block

Description

The **FRCP** label stands for **Force Present**. . There are two versions of the block. For SIL certified devices, the block has two output pins, whereas non SIL certified devices have single output pin. The block dimensions also vary for SIL and non SIL devices. This block is part of the Alarms/Monitors category. It is available for Normal Scan only.

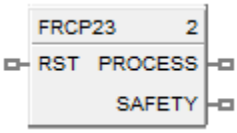

Function block for C30S, C50S, C70S, C75S device types.

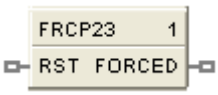

Function block for C30, C50, C70, C75 device types.

This block is part of the *Alarm/Monitor* category. It is available for Normal Scan only.

Function

Output indicates the presence of any forced blocks in the controller. Input can clear all forces and prevent new forces.

Inputs

RST - When ON clears all existing forces and prevents any new force requests, notifying user that forcing is disabled. Does not affect the Force Present block itself. When OFF, leaves forces in current state. No connection to this pin is the same as OFF.

Outputs

FORCED - ON = One or more forces exist in the controller.

OFF = No forces exist in the controller.

PROCESS - ON = One or more forces exist in the controller on Process Worksheets.

OFF = No forces exist in the controller on Process Worksheets.

SAFETY - ON = One or more forces exist in the controller on Safety Worksheets.

OFF = No forces exist in the controller on Safety Worksheets.

Block properties

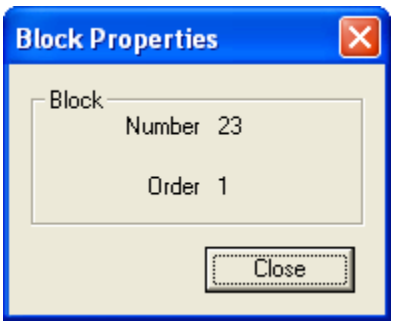

Double click on the function block to access the function block properties dialog box.

Configuration parameters

Table 50 Force Present configuration parameters

Properties Group	Parameter	Index #	Parameter Description	Value or Selection
Block	**Order**	N/A	Execution Order for Block	Read Only. To change block order, right-click on a Function Block and select Execution Order.

FSS Four Selector Switch Function Block

Description

The FSS label stands for Four-Selector Switch.

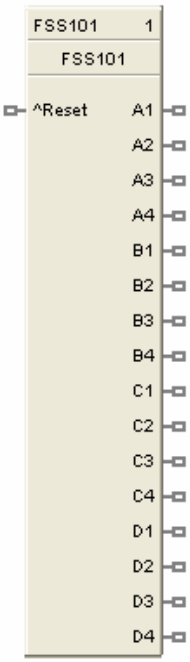

This block is part of the *Logic* category.

Function

Provides 16 digital outputs in groups of four. A dedicated display allows activating of only one output per group while other outputs in the associated group are turned off.

Inputs

RESET = Off to ON requests a reset state. Reset Input turns on #1 output of all 4 groups.

Outputs

A1, A2, A3, A4 = Bank A Output 1 through Output 4
B1, B2, B3, B4 = Bank B Output 1 through Output 4
C1, C2, C3, C4 = Bank C Output 1 through Output 4
D1, D2, D3, D4 = Bank D Output 1 through Output 4

ATTENTION

Only one output ON per group, A, B, C, D.

If the Operator Interface makes a request and RESET occurs on the same cycle, RESET will take precedence.

Block properties

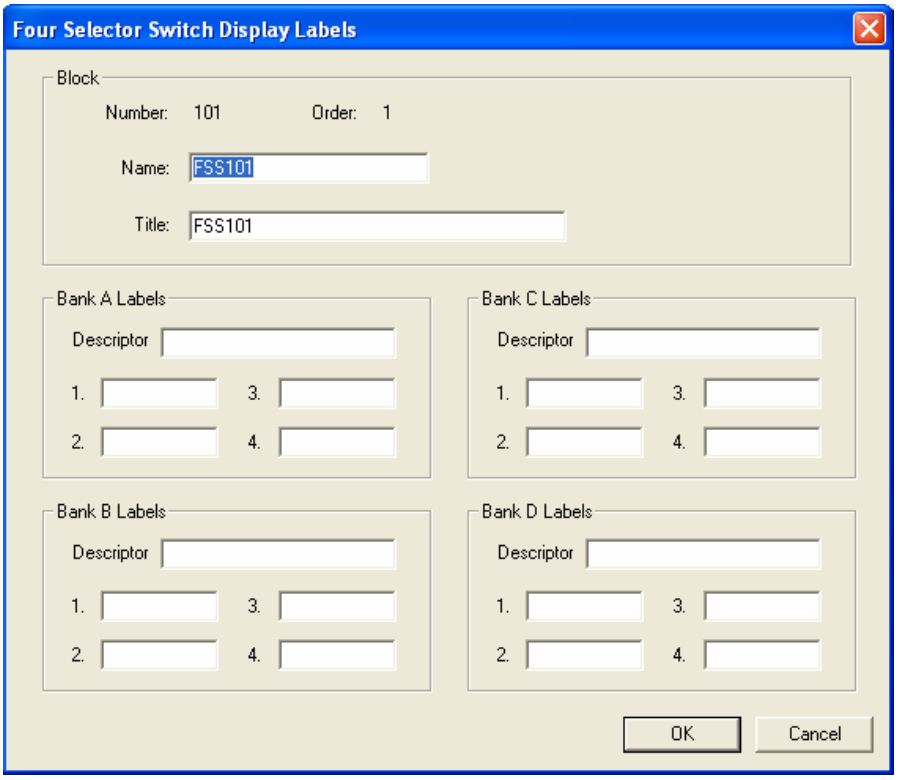

Double click on the function block to access the function block properties dialog box.

Configuration parameters

Table 51 Four Selector Switch (FSS) configuration parameters for operator interface display

Properties Group	Parameter	Index #	Parameter Description	Value or Selection
Name			Enter a Tag Name for the block	Up to 32-characters (ASCII characters only)
Title			Enter a Title for the block	24 characters
Bank x Labels **X = A, B, C, or D**	**Descriptor**		Enter a Descriptor for Bank x Labels	Up to 32-characters (ASCII characters only)
	Bank x Label 1		Enter a label name for display	6 characters
	Bank x Label 2		Enter a label name for display	6 characters
	Bank x Label 3		Enter a label name for display	6 characters
	Bank x Label 4		Enter a label name for display	6 characters

Example

Figure 41 shows a Four Selector Switch (FSS) function block and its associated display.

ATTENTION

The Four Selector group display is directly associated with the Four Selector Function Block. Pressing O/I Keys F1 through F4 call up a dialog box that allows changes to the output selection for the associated block.

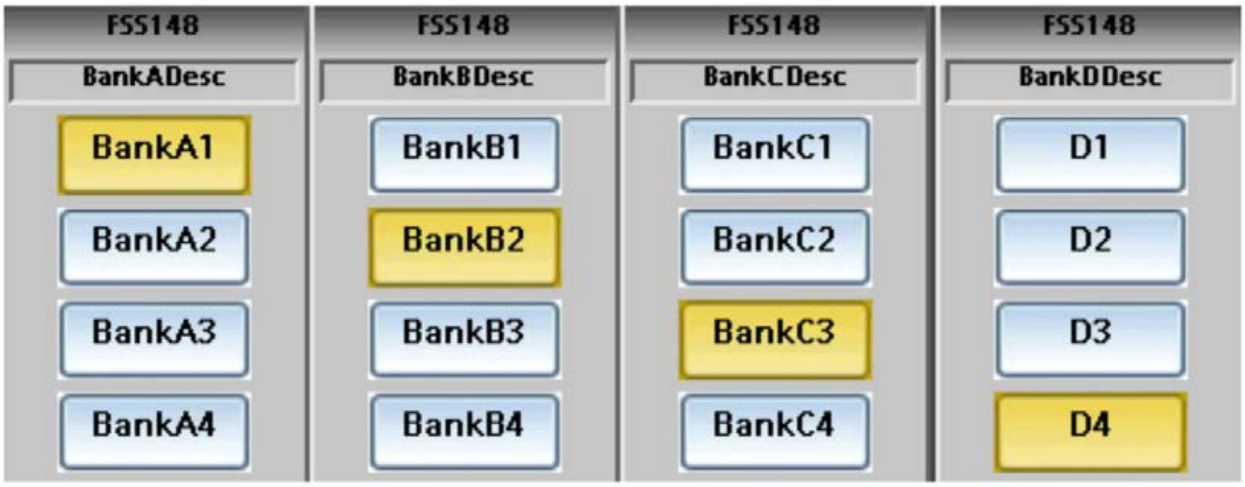

Figure 41 FSS function block example

FSYS Fast Logic System Monitor

Description

The FSYS label stands for Fast Scan System Status. This block is part of the Alarm/Monitor Blocks category.

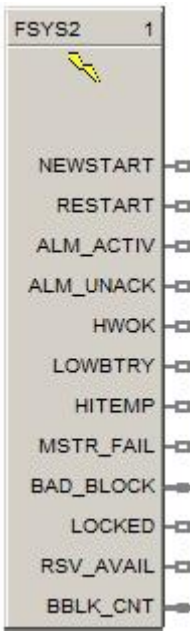

Function

This function block provides read access to controller status values including those related to the **Fast Scan** execution cycle. (To access status values relating to the Normal Scan execution cycle see the ASYS function block.) The outputs may be connected to function block inputs. The outputs may also be connected to signal tags for operator interface monitoring. The Fast Scan System Status block is assigned **block number 2**.

Versions

The status information available to be monitored for the fast scan execution system depends on both the controller type and the revision of software executing on the controller. As a result, there are different versions of the FSYS block and when you drag and drop this block onto a configuration worksheet the graphic may look a little different than the one shown above. The Process Control Designer will automatically select the correct version of the block based on the controller type and software revision selected for each configuration file.

The graphic shown above is for the most advanced version of the block and earlier versions may have fewer outputs, different output types and/or different output ordering. Where applicable, the differences are described in the table below for each output.

Restrictions

There can be only one instance of the FSYS function block within a configuration.

Table 52 Fast logic system status block outputs

Output	Description
NEWSTART	ON for one full cycle of control block execution, following a New start of the system. For example: starting after a change from program to run.
RESTART	ON for one full cycle of control block execution, following power up. [Warm Start]
ALM_ACTIV	Alarm Active is ON if any operator panel alarm is ON.
ALM_UNACK	Alarm unacknowledged is ON if any operator panel's alarm is unacknowledged.
HWOK	Hardware OK is ON if there are no faults. HWOK is set to off when a Rack Monitor Block's RACK OK pin is off.
LOWBTRY	Low Battery is ON if the battery is low, Off when battery is good.
HITEMP	High CJ Temperature is ON if the CJ temperature is high on any rack.
MSTR_FAIL	Communications Failure is ON when Modbus host diagnostic is not good.
BAD_BLOCK	Provides an indication of whether or not there are any blocks in the fast scan execution that are not operating properly. Any function block monitor window which indicates a block status other than "OK" is considered a Bad Block. For example: forced outputs (analog or digital), math errors (divide by zero), un-configured I/O blocks (rack/slot/channel) and PID blocks with a PV over/under the configured range limits. The level of indication provided depends on the software revision: **Revision 6.0:** This pin is an analog output which provides the block number of the first bad block in the fast scan configuration, as per execution order. Refer also to the BBLK_CNT output below. **Revision 4.402 and earlier:** This pin is a digital output which provides simple ON/Off indication of at least one bad block in the fast scan execution logic. The BBLK_CNT output below does not exist in these versions.
LOCKED	Controller locked in current mode by switch position.
RSV AVAIL	**Available for C75 and C75S redundant CPU controllers only**. ON when the Reserve CPU is available for failover. OFF when the Reserve CPU is unavailable for failover. On other controllers this pin may be missing or may be labeled as "N/A" and serves only as a placeholder, depending on the revision of the software.
BBLK_CNT	**Available in software revision 6.0 and higher.** The number of bad blocks present in the fast scan execution logic. Refer to the BAD_BLOCK output above for the definition of a bad block.

HART Command3 - Read Dynamic Variables And Loop Current

Description

The HART 3HCMD label stands for HART Command 3. This command gets the loop current and four (predefined) dynamic Variables.

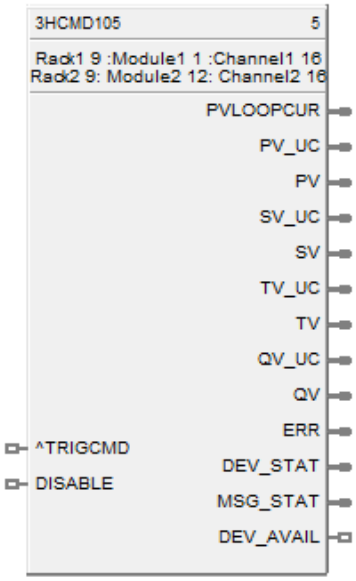

Function

Reads the Loop Current and up to four predefined Dynamic Variables. The Loop Current always matches the current that can be measured by a milli-ammeter in series with the field device; this includes alarm conditions and set values.

The Response Data is truncated after the last Dynamic Variable supported by each Device Type. For a given Device Type the number of Response Data bytes must be fixed. In other words, a Device type may not return PV, SV, and TV in one operating mode and later (in a different operating) only return PV and SV.

Input

Analog value from specified real I/O address.

^TRICMD = Trigger Command –

DIS = disable the HART Command3

Output

Output	Format	Description
PVLOOPCUR	Float	Primary Variable Loop Current (units of milli-amperes)
PV_UC	Enum	Primary Variable Units Code
PV	Float	Primary Variable
SV_UC	Enum	Secondary Variable Units Code
SV	Float	Secondary Variable
TV_UC	Enum	Tertiary Variable Units Code
TV	Float	Tertiary Variable
QV_UC	Enum	Quaternary Variable Units Code
QV	Float	Quaternary Variable
ERR Pin		1 – No Comm 2 – Bad Channel 3 – Dev Info Changed
DEV_STAT		0 - Primary variable out of limits 1 – Non-Primary variable out of limits 2 – Analog output #1 saturated 3 – Analog output #1 fixed 4 - More status available 5 – Cold Start 6 – Configuration changed 7 – Field device malfunction
MSG_STAT Pin		0 - No Trigger 1 – Triggered 2 – Inprogress 3 – Updated
DEV_AVAIL		ON/OFF

Block Properties

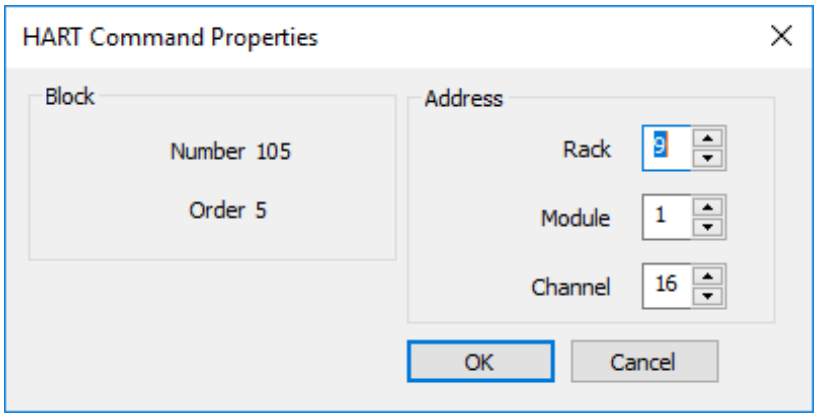

Configuration Parameters

Table 53 Command 3 Configuration Parameters

Properties Group	Parameter	Index #	Parameter Description	Value or Selection
Block	Number	N/A	Execution Number for Block	Read Only
	Order	N/A	Execution Order for Block	Read Only
Address	Rack		This is the address of the selected HART Channel.	Enter a value: from 1 to 12
	I/O Module		Address of selected HART Channel.	Enter a value: from 1 to 12
	Channel		Channel on selected HART Channel. **Note**: CH-B is Read Only. CH-B value is same as CH-A.	Enter a value: 3 to 16.

HART Command48 - Read Additional Device Status

Description

This command read the additional device status bytes. There are 9 additional status bytes but there is only a bit used that is the bit 0 of the Byte 0. When this bit is set to 1 the converter is in excitation fail status and the bit “Device malfunction” is on.

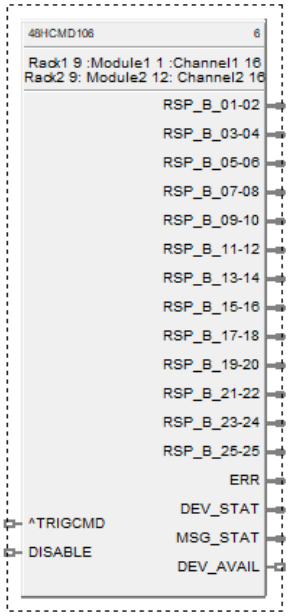

Function

This command must be implemented by all devices.

Returns device status information not included in the Response Code or Device Status Byte. This command also returns the results of Command 41, Perform Self Test. Response Bytes 0-5 and 14-24 may contain Device-Specific Status information. Extended Device Status, Device Operating Mode, and Standardized Status 0-3 contain commonly used status information.

Input

Analog value from specified real I/O address.

^TRICMD = Trigger Command –

DIS = disable the HART Command48

Output

Output	Format	Description
ERR		1 – No Comm 2 – Bad Channel 3 – Dev Info Changed
DEV_STAT		0 - Primary variable out of limits 1 – Non-Primary variable out of limits 2 – Analog output #1 saturated 3 – Analog output #1 fixed 4 - More status available 5 – Cold Start 6 – Configuration changed 7 – Field device malfunction
MSG_STAT		0 - No Trigger 1 – Triggered 2 – Inprogress 3 – Updated
DEV_AVAIL		ON/OFF

Block Properties

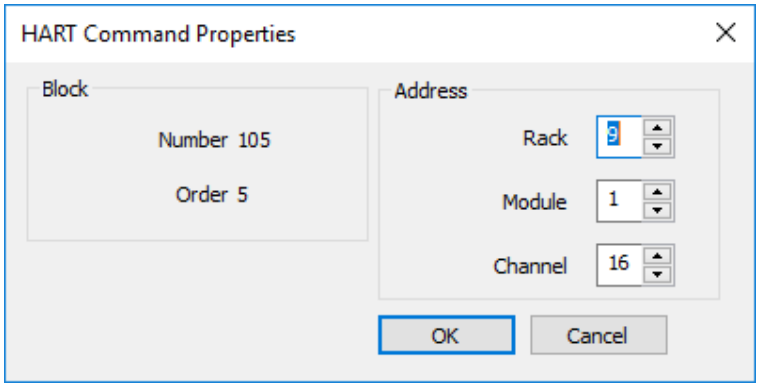

Configuration Parameters

Table 54 Command48 Configuration Parameters

Properties Group	Parameter	Index #	Parameter Description	Value or Selection
Block	Number	N/A	Execution Number for Block	Read Only
	Order	N/A	Execution Order for Block	Read Only
Address	Rack		This is the address of the selected HART Channel.	Enter a value: from 1 to 12
	I/O Module		Address of selected HART Channel.	Enter a value: from 1 to 12
	Channel		Channel on selected HART Channel. **Note**: CH-B is Read Only. CH-B value is same as CH-A.	Enter a value: 3 to 16.

HLLM High Low Limiter Function Block

Description

The HLLM label stands for **High Low limiter**.

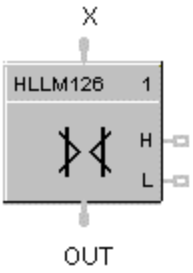

This block is part of the *Auxiliary* category.

Function

Provide high-low limit for an analog (**X**) value.

Turns ON H or L digital output if input exceeds or falls below set limits.

- If X < or = Low Limit value, then: **OUT = LoLlM; L = ON; H = OFF.**
- If X > or = High Limit value, then: **OUT = HiLlM; L = OFF; H= ON.**
- If X > Low Limit value and < high Limit value, then: **OUT = X; L = OFF; H = OFF.**

Input

X = Analog Value

Output

OUT = Analog value within limits

L = Low Limit digital indication

H= High Limit digital indication

Block properties

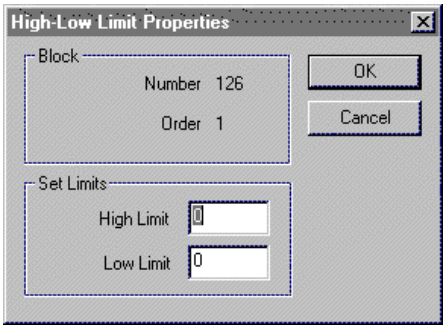

Double click on the function block to access the function block properties dialog box.

Configuration parameters

Table 55 High low limit configuration parameters

Properties Group	Parameter	Index #	Parameter Description	Value or Selection
Set Limits	**High Limit**	0	High limit value for analog (X) value	–99999 to 999999
	Low Limit	1	Low limit value for analog (X) value	–99999 to 999999

Example

Figure 42 shows a Function Block Diagram using an HLLM function block to provide a remote setpoint signal within specified limits to a PID Control Loop.

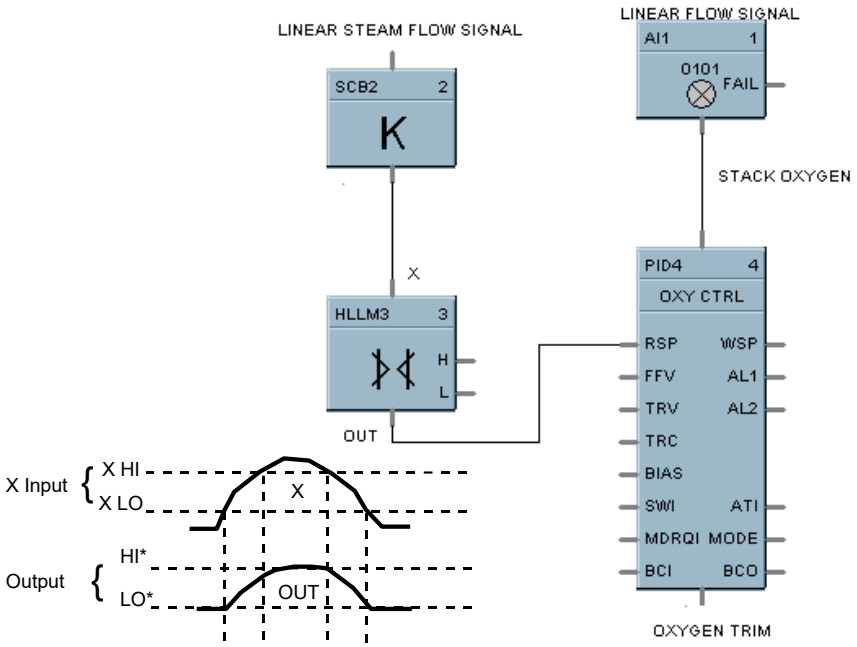

Figure 42 HLLM function block example

HMON High Monitor Function Block

Description

The **HMON** label stands for **High Monitor.**

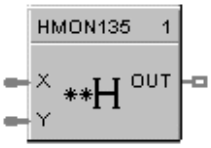

This block is part of the *Alarm/Monitor* category.

Function

Monitors two analog input values (X and Y) and turns ON a digital output if X exceeds Y.
A hysteresis adjustment is provided to prevent output cycling.

- If X > Y, then **OUT = ON.**
- If X < or = (Y – Hysteresis), then **OUT = OFF.**
- If (Y – Hysteresis) < X < Y, then **OUT = Previous State.**

Input

X = Analog value.

Y = Analog value

Output

OUT = Digital signal

Block properties

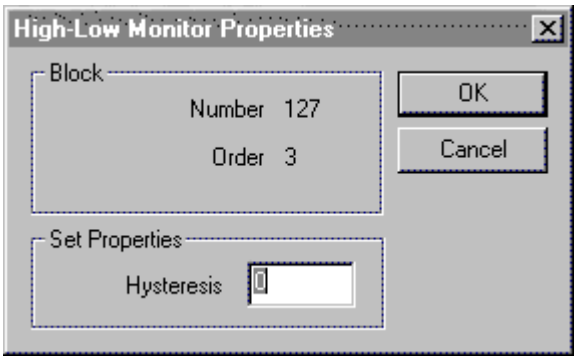

Double click on the function block to access the function block properties dialog box.

Configuration parameters

Table 56 High monitor function block configuration parameters

Properties Group	Parameter	Index #	Parameter Description	Value or Selection
Set Properties	**Hysteresis**	0	An adjustable overlap of the On/Off states of the output.	0 to the Span of Y input in Engineering units.

Example

Figure 43 shows a Function Block Diagram using an HMON function block. It shows a typical output signal response provided by an HMON function block.

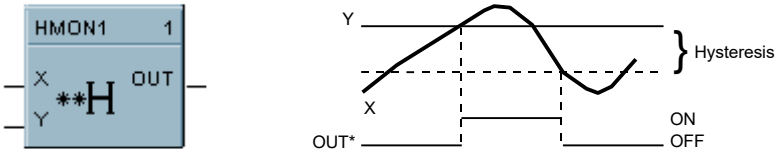

Figure 43 HMON function block example

HOA Hand/Off/Auto Switch Function Block

Description

The HOA label stands for Hand/Off/Auto Switch.

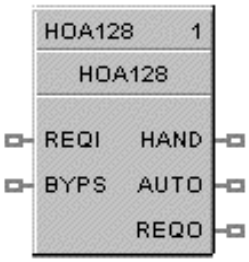

This block is part of the *Auxiliary* category.

Function

The Hand – Off – Auto (HOA) switch function block permits state change requests from a Local Operator Interface or a Remote source. The block states are: BYPASS (external manual operation of a device), HAND (manual operation from an operator interface), AUTO (default – requests are operated automatically), or OFF (relay to be switched to Bypass, Hand, or Auto)

The HOA switch is also used with the Device Control (DC) function block to comprise a Pump Control algorithm which is used to manipulate the state of a controlled device (pump).

Each configuration is limited to a maximum of 16 HOA function blocks.
Forcing of outputs is NOT permitted within this block.

Input

REQI = If the current state of the block is AUTO, then REQO output (on/off) equals the REQI input (on/off).

BYPS = If ON, the REQO output is forced off and any state change requests are ignored. If OFF, the block returns to its previous state (Hand, Off, Auto).

Output

HAND = ON when the block is in the HAND state, else OFF. Device is in manual operation from an operator interface; prevents automatic operation; this state forces the REQO output ON.

AUTO = On when block is in AUTO state, else OFF. Requests are operated automatically.

REQO = This is ON when in the HAND state, or when in the AUTO state and the REQI input signal is ON. OFF when in the OFF or BYPASS state.

Note. Both HAND and AUTO are OFF in the OFF and BYPASS states.

Block properties

The **HAND/OFF/AUTO** properties dialog box is divided into two tab cards:

GENERAL
FEEDBACK SIGNAL

`Click on the tab to access the properties for that tab.`

GENERAL tab

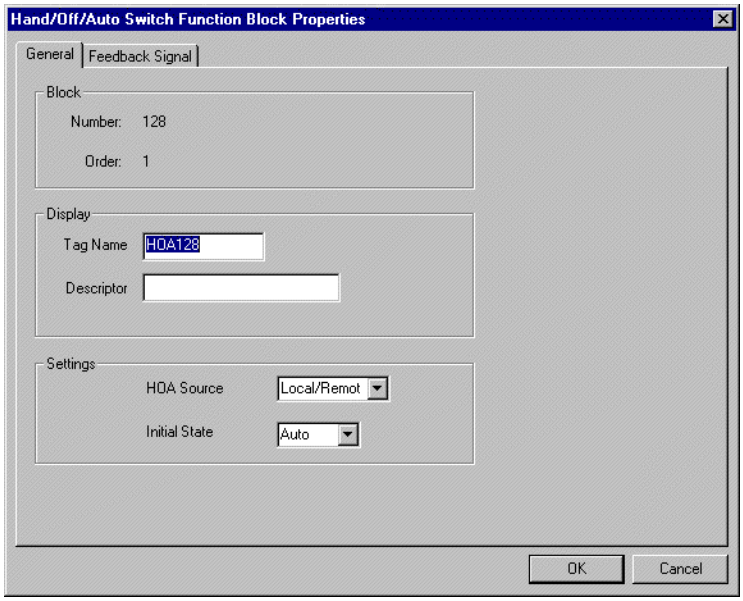

Table 57 HOA general tab parameters

Properties Group	Parameter	Index #	Parameter Description	Value or Selection
Display	**Tag Name**	N/A	32-characters unique tag name (ASCII characters only)	Up to 32-characters
	Descriptor	N/A	Block description	Up to 32-characters
Settings	**HOA Source**	N/A	Determines which devices have permission to write Hand-Off-Auto state change requests.	**Local** (Local Operator Interface) **Remote** (Serial Communications) **Local/Remote** Default = Local/Remote
	Initial State	N/A	Start-up state of the function block. User can change the current state from the operator interface if the **HOA Source** is **Local** or **Both.**	**OFF** **HAND** **AUTO**

FEEDBACK SIGNAL tab

The feedback signal is used for display purposes.

When the HOA block is used in conjunction with a Device Control (DC) block, the feedback is typically referenced to the (STI) status output pin of the DC block. The sample text shown in Table 58 would correspond to the states of the DC block.

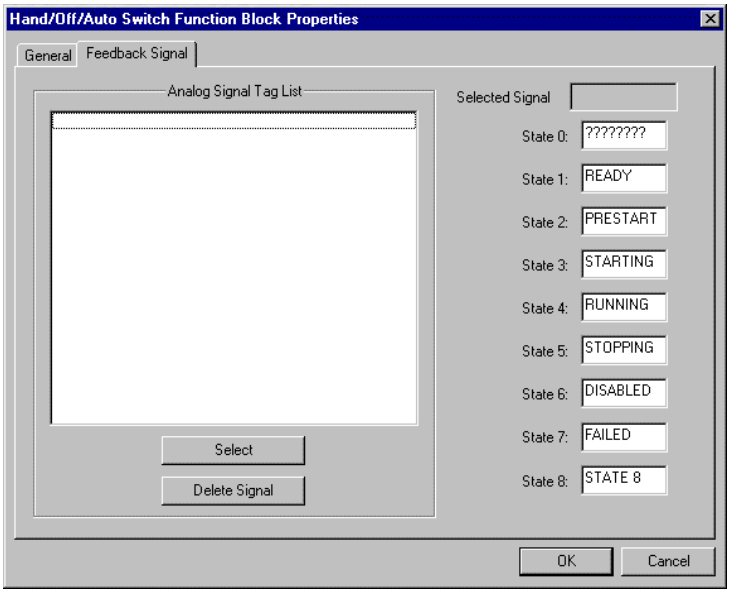

To select a Feedback signal and to define state text for the enumerated value of the feedback signal, proceed with the sequence 1 through 3 below.

Table 58 HOA feedback signal tab parameters

Sequence Number	Parameter Field	Action	Selections	Comments
1	Analog Signal Tag List	Click on a signal tag in the list	Select from all configured Analog Signal tags listed	
2	Select/Delete Signal	Click “Select” at the bottom of the “*Analog Signal Tag List*” to place highlighted signal tag into the “Selected Signal” field		The selection is placed in the Selected Signal field on the dialog box. Click on “Delete Signal” at the bottom of the “*Analog Signal Tag List*” to remove a signal tag from field.

Sequence Number	Parameter Field	Action	Selections		Comments
3	States	The state text will be selected for the display based on the numerical value (0 through 8) of the specified analog signal.	Default Text	Enumerated value of selected signal	You can highlight any state and change the text to whatever you desire for that state. ???????? = Block not used
			????????	0	
			READY	1	
			PRESTART	2	
			STARTING	3	
			RUNNING	4	
			STOPPING	5	
			FAILED	6	
			DISABLED	7	
			STATE 8	8	

Example

Figure 44 shows a Function Block Diagram using an HOA function block in conjunction with a Device Control (DC) block and an external HOA switch for pump control. The level signal input and Compare (CMPR) function are used to determine pump On/Off demand.

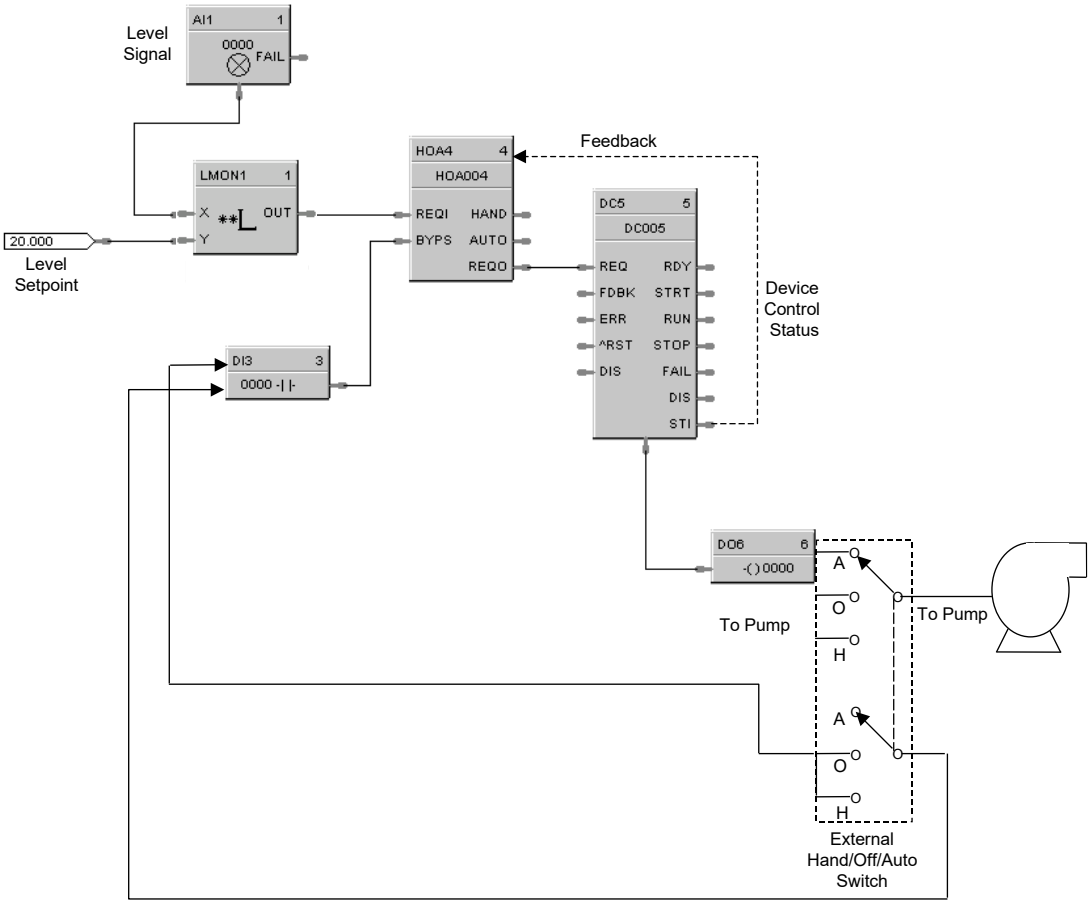

Figure 44 HOA function block example

HSEL High Selector Function Block

Description

The **HSEL** label stands for **High Selector.**

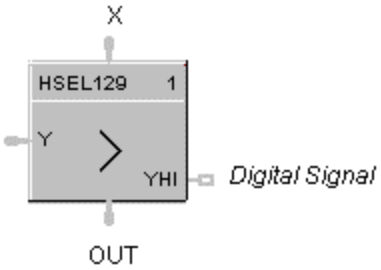

This block is part of the *Signal Selectors* category.

Function

Selects higher of two analog input values (X and Y) for output.
Indicates when Y is higher than X.

- If X > or = Y, then: **OUT = X; YHI = OFF.**
- If X < Y, then: OUT = Y; YHI = ON.

Input

X = Analog value
Y = Analog value

Output

OUT = Higher analog value
YHI = Digital signal. (ON when Y>X.)

Block properties

Double click on the function block to access the function block properties dialog box.

Example

Figure 45 shows a Function Block Diagram using an HSEL function block to monitor two analog inputs to activate an alarm signal tag.

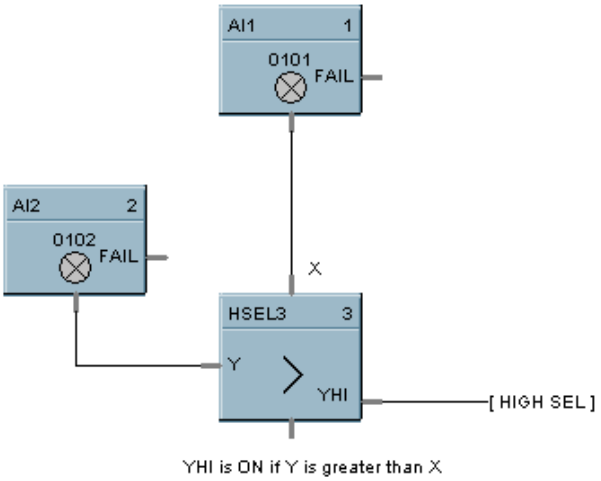

Figure 45 HSEL Function Block Example

IMM - IO Module Monitor Block

Description

The IMM label stands for IO Module Monitor Block.

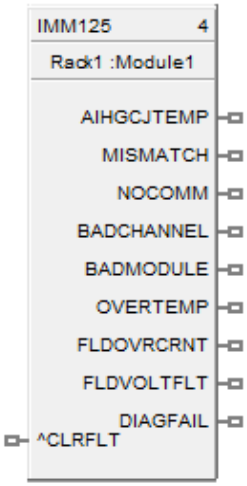

This block is part of the Alarm/Monitor category.

Function

The IMM block has a fault clear input pin used for clearing all the faults of module it is configured for. Each IMM function block requires a rack number, module number. This block provides module diagnostics. This can be used in place of FM (Fault monitor) block also.

Note: Field current shown on the block monitor window has an offset of 1-20mA.

Inputs

CLRFLT – OFF to ON = Clears all the existing faults of module.

- ON = Leaves the existing faults in the current status.
- OFF = Leaves the existing faults in the current status.

Outputs

AIHGCJTEMP = Analog input High CJ Temperature Fault (applies to only UAI module)

MISMATCH = Module mismatch fault

NOCOMM = No communication fault

BADCHANNEL = Bad channel fault

BADMODULE = Bad module fault

OVERTEMP = Over temperature fault (applies to only UIO module)

FLDOVERCRNT = Field Over Current Fault (applies to only UIO module)

FLDVLTFLT= Field Volt Fault (applies to only UIO module)

DIAGFAIL = Fail Status of diagnostics (applies to only UIO module)

Block Properties

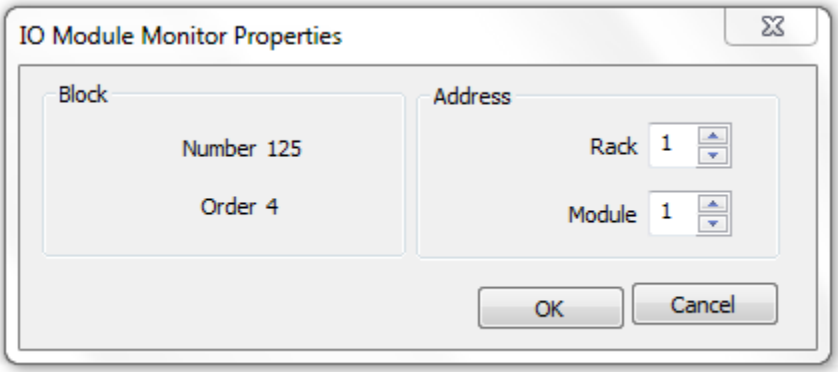

Double click on the function block to access the function block properties dialog box.

Configurable Parameters

Properties Group	Parameter	Index #	Parameter Description	Value or Selection
Address	Rack	N/A	Rack address of selected DO module	Enter a value: from 1 to 12
	I/O Module		Address of selected module	Enter a value: from 1 to 12

Example

Figure 46 IMM function blockshows a Function Block Diagram using an IMM function block

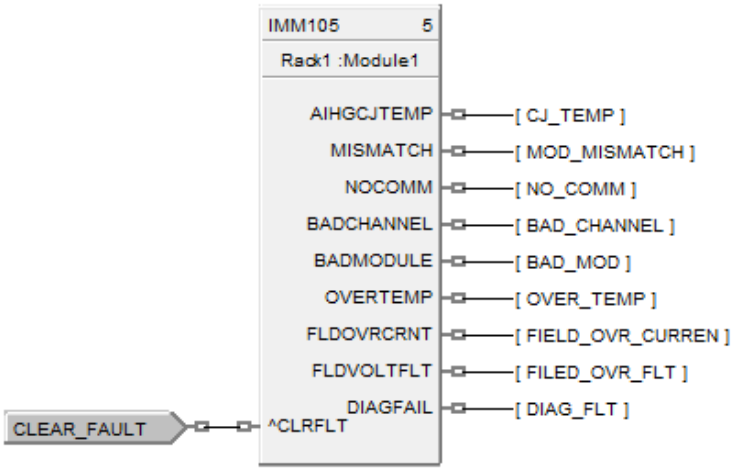

Figure 46 IMM function block

LDLG Lead/Lag Function Block

Description

The **LDLG** label stands for **Lead/Lag.**

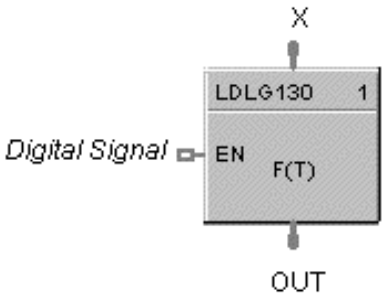

This block is part of the *Auxiliary* category.

Function

Modifies an analog input value (X) to include LEAD (T2) and LAG (T1) time constants of from 0 to 99 minutes, when a digital input (EN) is ON.

- If EN = ON, then:

$$\mathbf{OUT = \frac{1 + sT2}{1 + sT1} \times X}$$

s = Laplace operator

If T1 = 0, then:

$$\mathbf{OUT = last\ X + \frac{T2}{t}\ (X - last\ X)}$$

last X = Input value from execution cycle.

t = Duration of previous cycle time in minutes.

If T2 = 0, then the block functions as a digital lag filter.

- If EN = OFF, or initial start, then: **OUT = X.**

Inputs

X = Analog value (Primary Input)

EN = Digital signal (Enable)

Output

OUT = Analog value as modified

Block properties

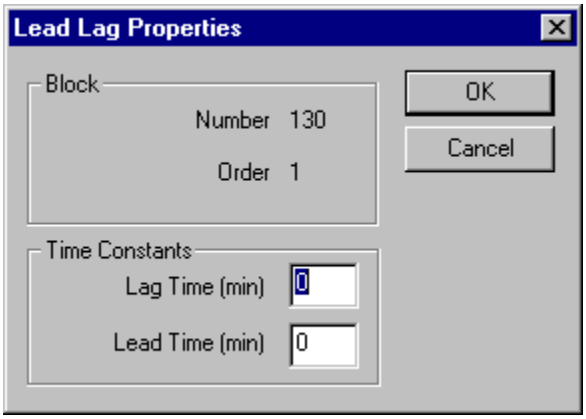

Double click on the function block to access the function block properties dialog box.

Configuration parameters

Table 59 Lead lag configuration parameters

Properties Group	Parameter	Index #	Parameter Description	Value or Selection
Time Constants	**Lag Time (min)**	0	T1 - Lag Time Constant	0.00 to 99.00 minutes
	Lead Time (min)	1	T2 - Lead Time Constant NOTE: If T2 is set to 0, function becomes a lag filter.	0.00 to 99.00 minutes

Example

Figure 47 shows a Function Block Diagram using an LDLG function block to modify the PV signal for the remote setpoint input of the PID control loop.

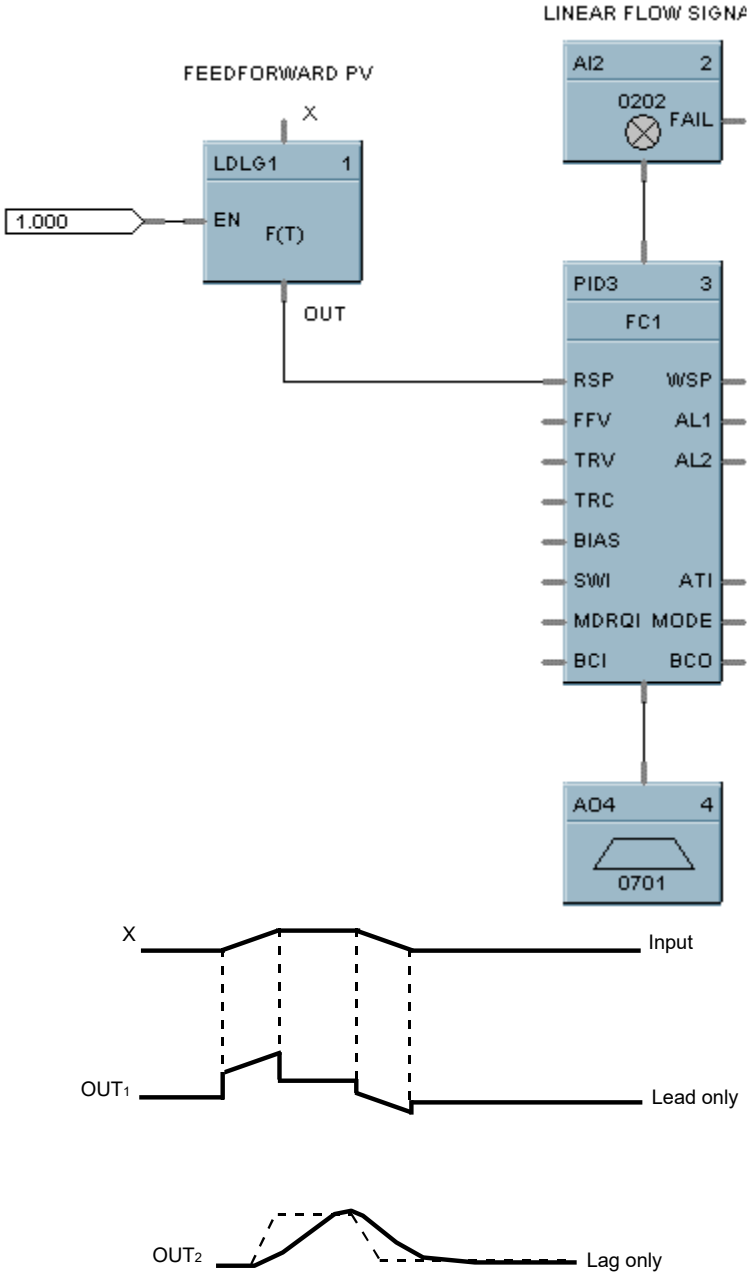

Figure 47 LDLG function block example

LMON Low Monitor Function Block

Description

The **LMON** label stands for **Low Monitor.**

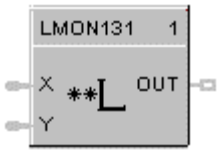

This block is part of the *Alarm/Monitor* category.

Function

Monitors two analog input values (X and Y), and turns ON a digital output if X is less than Y. A hysteresis adjustment is provided to prevent output cycling.

- If X < Y, then: **OUT = ON.**
- If X > or = (Y + Hysteresis), then: **OUT = OFF.**
- If (Y + Hysteresis) > X > Y, then: **OUT = Previous State.**

Input

X = Analog value.

Y = Analog value

Output

OUT = Digital signal

Block properties

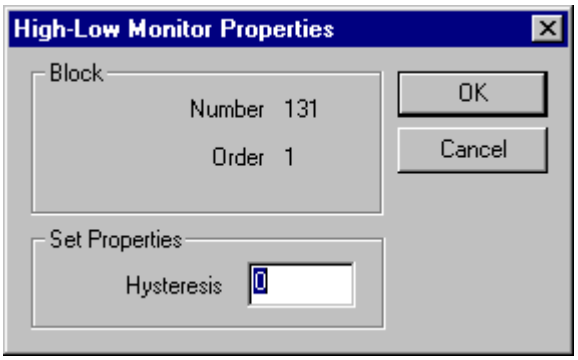

Double click on the function block to access the function block properties dialog box.

Configuration parameters

Table 60 Low monitor function block configuration parameters

Properties Group	Parameter	Index #	Parameter Description	Value or Selection
Set Properties	**Hysteresis**	0	An adjustable overlap of the On/Off states of the output.	0 to the Span of Y input in Engineering units.

Example

Figure 48 shows a Function Block Diagram using an LMON function block. It shows a typical output response provided by a LMON function block.

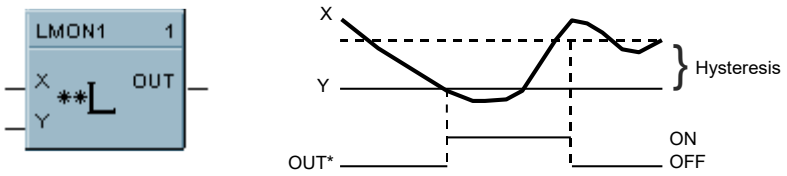

Figure 48 LMON function block example

LPSW Loop Switch Function Block

Description

The **LPSW** label stands for **Loop Switch.**

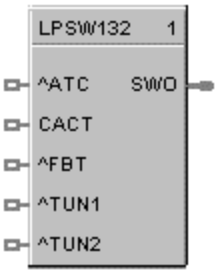

This block is part of the *Loops* category.

Function

Digital interface to control loops to initiate autotuning, change control action, force bumpless transfer, select tuning set. It connects to a PID, TPSC, or CARB function block.

Inputs

^ATC = Autotune Command (OFF to ON initiates Autotuning)**

CACT = Change Control Action (ON changes Control Action)

^FBT = Force Bumpless Transfer (OFF to ON Forces Bumpless Transfer)** Performs the same function that occurs when the loop changes from Manual to Automatic mode. The loop will re-calculate the integral term to normalize the PID algorithm to the current PV and SP. You could use this input to correct for a reset wind-up condition that might have occurred when an input sensor failed and was replaced/corrected.

^TUN1 = Tune Set 1 (OFF to ON switches to Tune Set 1*)**

^TUN2 = Tune Set 2 (OFF to ON switches to Tune Set 2)**

* Switch to Tune Set 1 overrides concurrent command to switch to Tune Set 2

** Not available for ON/OFF function Block

Output

SWO = The output of this block must connect to the SW1 input of a PID, CARB, and TPSC function block.

Note: Transitions of the SWO output are not sensed when a PID loop is in Manual mode.

Block properties

Double click on the function block to access the function block properties dialog box.

Example

Figure 49 shows a Function Block Diagram using an LPSW function block

Function: Digital interface to initiate:

- Autotuning
- Change Control Action: Direct/Reverse Action
- Force Bumpless Transfer (rebalance the algorithm)
- Select Tuning Set #1
- Select Tuning Set #2

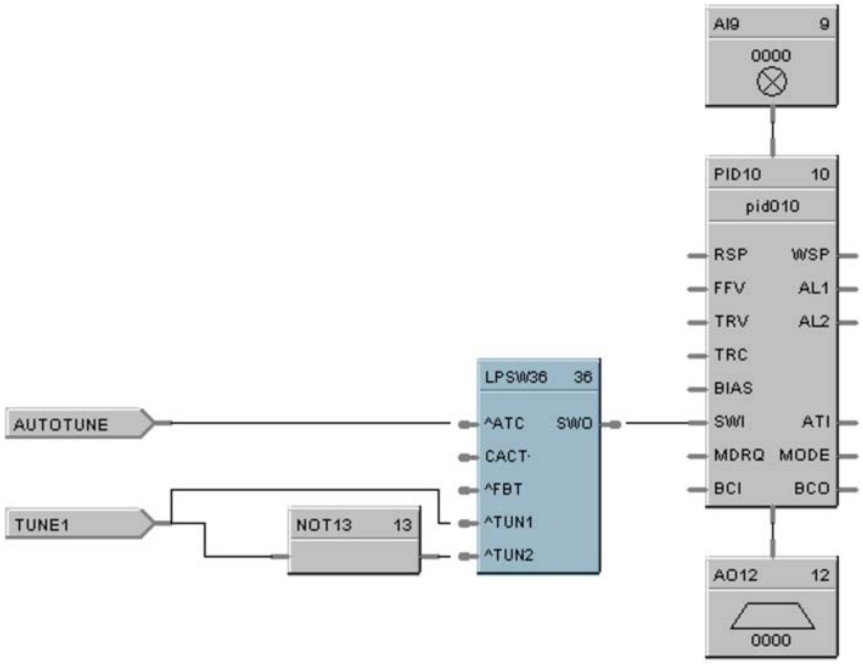

Figure 49 LPSW function block example

LSEL Low Selector Function Block

Description

The **LSEL** label stands for **Low Selector.**

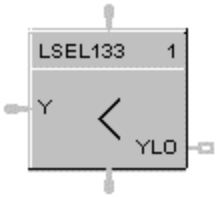

This block is part of the *Signal Selectors* category.

Function

Selects lower of two analog input values (X & Y) for output.

Indicates when Y is lower than X.

- If X < or = Y, then: **OUT = X; YLO = OFF.**
- If X > Y, then: OUT = Y; YLO = ON.

Input

X = Analog value
Y = Analog value

Output

OUT = Lower analog value
YLO = Digital signal (ON when Y<X)

Block properties

Double click on the function block to access the function block properties dialog box.

Example

Figure 50 shows a Function Block Diagram using an LSEL function block to monitor two analog inputs to activate an alarm signal tag.

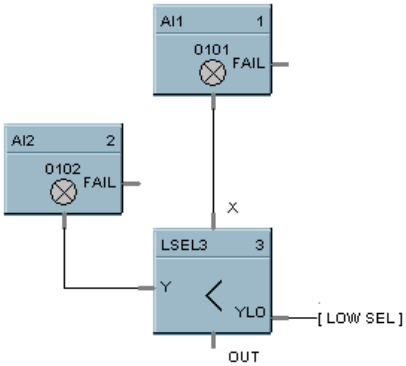

Figure 50 LSEL function block example

LTCH Latch Function Block

Description

The **LTCH** label stands for **Latch.**

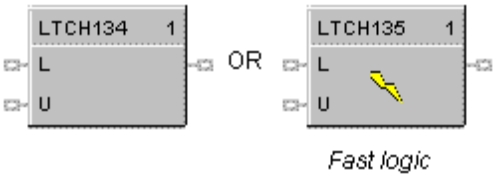

This block is part of the *Logic* and *Fast Logic* categories.

Function

Latches output (OUT) ON when latch input (L) turns ON and maintain latched output until unlatch input (U) turns ON.

INPUT		OUTPUT
LATCH	**UNLATCH**	
ON	OFF	ON
ON	ON	OFF
OFF	ON	OFF
OFF	OFF	LAST STATE

Input

L = Latch Command Digital signal.

U = Unlatch Command Digital signal.

Output

OUT = Digital signal

Block properties

Double click on the function block to access the function block properties dialog box.

Example

Figure 51 shows a Function Block Diagram using an LTCH function block.

PLC Ladder Logic

An ON Delay timer is added to a basic Start/Stop circuit which activates the ON Lamp. In ladder logic, the DO1 contact status is used to activate the timer and latch in the start pushbutton action. After 20 sec., SOL4 (DO2) is turned ON which is held as long as DO1 is ON.

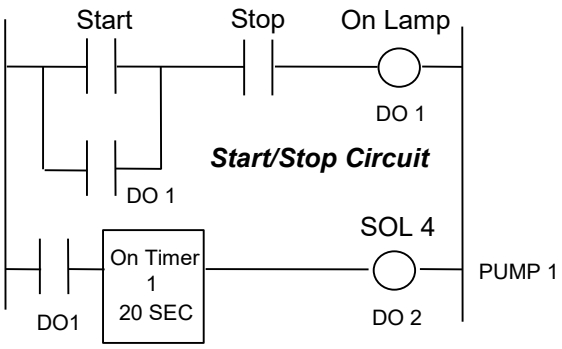

HC900 Logic

The Start/Stop latch circuit is used since no external confirmation is needed. In this example, the Operator Panel pushbutton switches (F1 and F2) are used to substitute for panel switches. The Push Button function block is used to assign Start to F1 and Stop to F2. The latch output turns on the ON Lamp and starts the timer. After 20 sec., Solenoid 4 is activated. Note: the ON and OFF Delay timers are reset after timeout or if the logic state to the input goes to logic 0 (or low).

5 Function Blocks

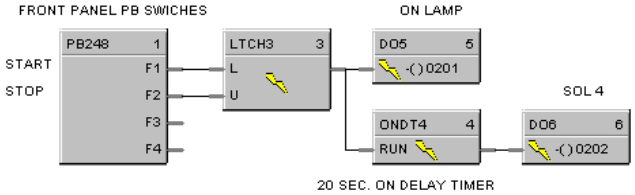

Figure 51 LTCH function block example

MATH Function Block

Description

The MATH label stands for Free Form Math.

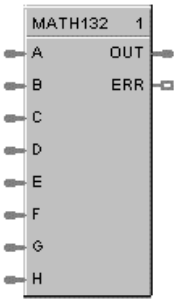

This block is part of the *Math* category.

Function

Read inputs A through H and calculates the output based on specified general purpose calculation. OUT is calculated from an equation entered here.

- Offers the following general purpose calculation functions:
  - abs = addition,
  - EXP = exponential ($\ln^{-1}$),
  - Ln = natural log (log base e),
  - Log 10 = log base 10,
  - neg (Unary) = negation,
  - sqrt = Square Root,
  - + = addition,
  - – = subtraction,
  - * = multiplication,
  - / = division,
  - ^ = raised to power of (x^y)
  - (= left parenthesis,
  -) = right parenthesis, and
- A maximum of either 50 tokens (note 1) per equation or 100 characters per line is allowed, whichever is first exceeded.

ATTENTION

A token is an operation, variable, or pair of parenthesis; the end of an equation counts as one token.

Inputs

IN A – block input 1
IN B – block input 2
IN C – block input 3
IN D – block input 4
IN E – block input 5
IN F – block input 6
IN G – block input 7
IN H – block input 8

Output

ERR = ON if block detects an error on any of the following operations:

- division by 0
- fractional root of a negative number (for example: -2**0.5)
- zero to the zero power
- LOG10 or LN of a negative number or 0
- result of x^y is greater than 1.7E + 308.
- result of EXP (x) is greater than 3.4E + 308 or less than 3.4E -308.

ATTENTION

- For the above rules, groups of constants will be combined and treated as one constant.
- Any number less than or equal to 3.4E -308 is considered 0.

OUT = Calculated Output

ATTENTION

- Use only the following words and characters in equations
  - +; -; *; /: ^; EXP; LOG10; Ln; Negative (Unary minus);
  - ' ' Blank space (ignored)
  - 'a' . . 'h' Variables (operand) either a constant or tag
  - ( ), [ ], { } Parentheses - 3 types
- A left parenthesis must have a matching right parenthesis.
- The matching parenthesis must be the same type - e.g., ( ), [ ], or { }.
- Parentheses may be nested to any depth.
- Infix operators: +, -, *, /, ^ must have a left and right operand.
- If the '-' operator only has a right operand, it is interpreted as the Unary minus.
- Function operators: EXP, LOG10, Ln must have an operand to the right, and the operand must be enclosed in parentheses.

Examples: EXP(A), LOG10(b), LN(c), A*(sqrt(B+C))+D, (A+B*C)/D

Block properties

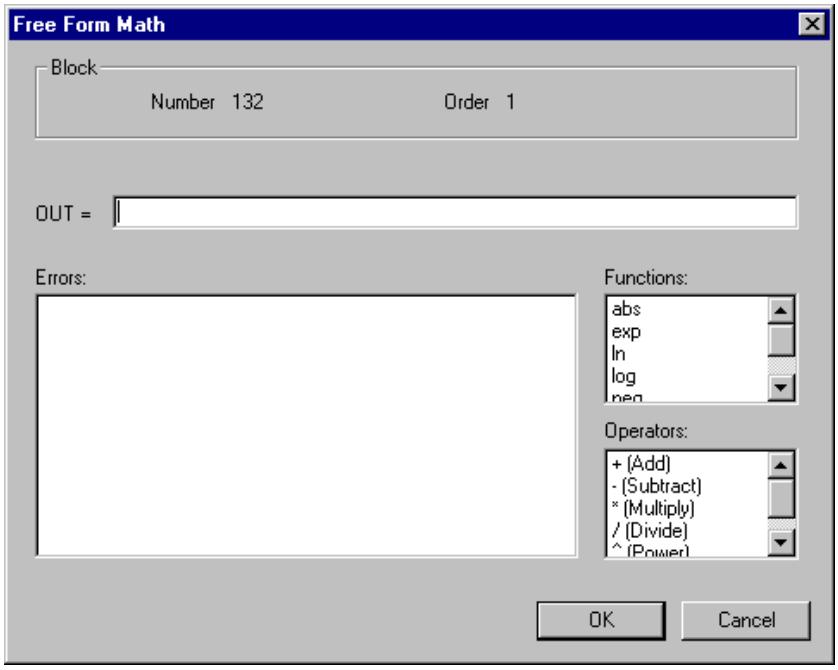

Double click on the function block to access the function block properties dialog box.

Configuration parameters

Table 61 Math function block configuration parameters

Properties Group	Parameter	Index #	Parameter Description	Value or Selection
Equations	**Equation Field**	N/A	OUT= [equation]	Enter the desired equation in this field
Functions	**Math Functions**	N/A	abs, exp, ln, log, neg, sqrt	Double Click on a function to select from the list box
Operators	**Math Operations**	N/A	+ (add) - (subtract) * (multiply) / (divide) ^ (power)	Double Click on an operation from the list box
Errors	**Error list**	N/A	List of equation errors	

Example

Figure 52 shows a Function Block Diagram using a MATH function block to determine a general-purpose calculation output.

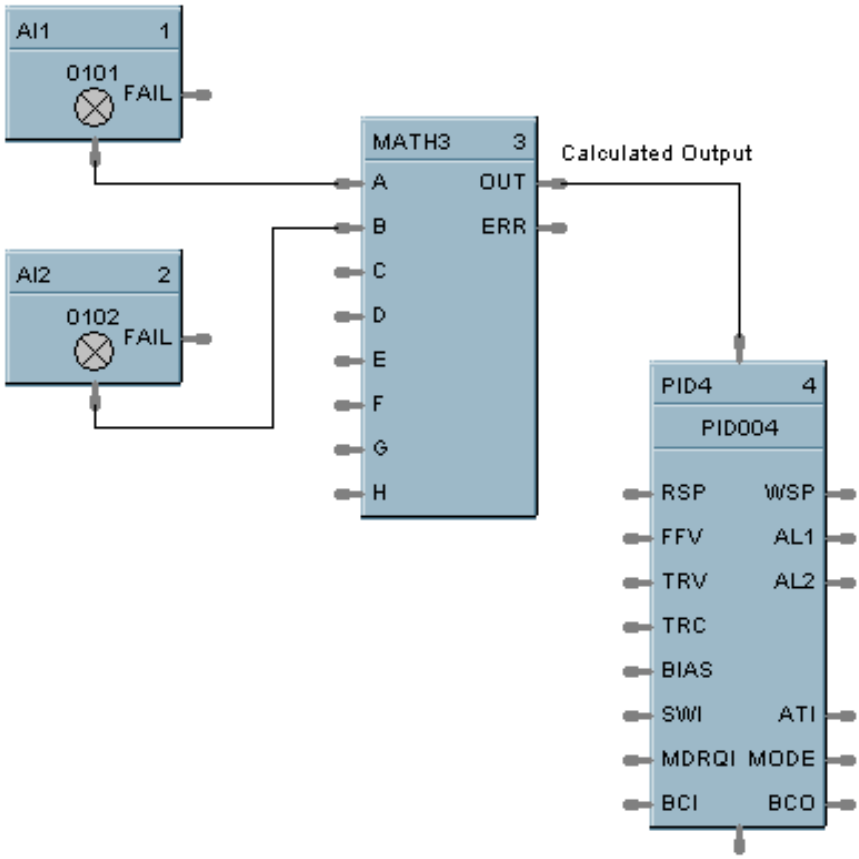

Figure 52 MATH function block example

Multiple Alarm with Hysteresis

Description

The **MALM** label stands for the **Multiple Alarm with Hysteresis.** This block is part of the Alarm/Monitor category. It looks like this graphically.

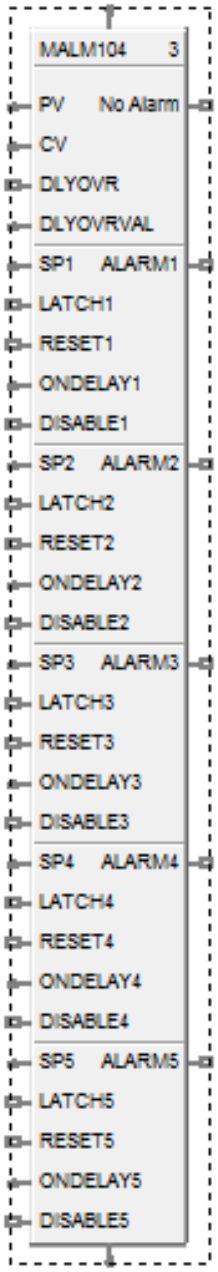

Function

This block monitors five analog input values (SP1, SP2, SP3, SP4, SP5) and performs up to five alarm comparisons against the PV input. Alarm actions may be high, low or high deviation, low deviation or band deviation, In band deviation. For deviation alarming, a second analog signal provides the reference and set points represent deviation from the reference.

The associated output pins, ALARM1 through ALARM5, will turn ON if the configured alarm condition is present. The individual hysteresis settings for each alarm are used to prevent output cycling.

A user-specified hysteresis value in the engineering units of the process variable is provided.

An on-delay time value 0 to 99999.9 seconds is available to prevent momentary alarm actions. A digital Disable input is available to disable alarm actions.

The alarm output may be inverted to create normally active digital output. A user selection for latching until acknowledged reset is provided.

No Alarm pin is provided to indicate alarm state of this block. ON state indicates there is no alarm activated.

COUT pin is provided in the bottom to cascade high alarm code from the **MALM** block.

Alarm Type Function

(PV>SP) - High Process Variable/Setpoint

ALARMx - ON If the PV is greater than the Setpoint*

ALARMx - OFF If the PV is less than the Setpoint* minus Hysteresis

(PV>CV) High Process Variable/Compare Value

ALARMx - ON If the PV is greater than the Compare Value (CV) i.e. Alarm Setpoint

ALARMx - OFF If the PV is less than the Compare Value minus Hysteresis

(PV<SP) Low Process Variable/Setpoint*

ALARMx - ON If the PV is less than the Setpoint*

ALARMx - OFF If the PV is greater than the Setpoint* + Hysteresis

(PV<CV) Low Process Variable/Compare Value

ALARMx - ON If the PV is less than the Compare Value (CV)

ALARMx - OFF If the PV is greater than the Compare Value + Hysteresis

[(PV-CV)>SP] High Deviation Alarm

ALARMx - ON If the PV input minus the CV input is greater than the Setpoint*

ALARMx - OFF If the PV input minus the CV input is less than the Setpoint* minus Hysteresis

[(CV-PV)>SP] Low Deviation Alarm

ALARMx - ON If the CV input minus the PV input is greater than the Setpoint*

ALARMx - OFF If the CV input minus the PV input is less than the Setpoint* minus Hysteresis

[(PV-CV)>SP] Band Deviation Alarm

ALARMx = ON If the absolute value of (PV-CV) is greater than the Setpoint*

ALARMx = OFF If the absolute value of (PV -V) is less than the Setpoint* minus Hysteresis

[(PV-CV)<SP] In Band Deviation Alarm

ALARMx = ON If the absolute value of (PV-CV) is less than the Setpoint*

ALARMx = OFF If the absolute value of (PV-CV) is greater than the Setpoint* plus Hysteresis

Where x = 1 to 5

Inputs

CIN - Input Alarm Code

PV - Process Variable

CV - Compare Variable

DLYOVR - Delay Override

DLYOVRVAL - Delay Override Value

LATCHx - Latchable Alarm

RESETx - Reset the Alarm

ONDELAYx - On Dealy

DISABLEx - Disable the Alarm

Output

ALARMx - Alarm status of each alarm

No Alarmx - Alarm status of block

COUT - Output Alarm code

Block properties

Double click on the function block to access the function block properties dialog box.

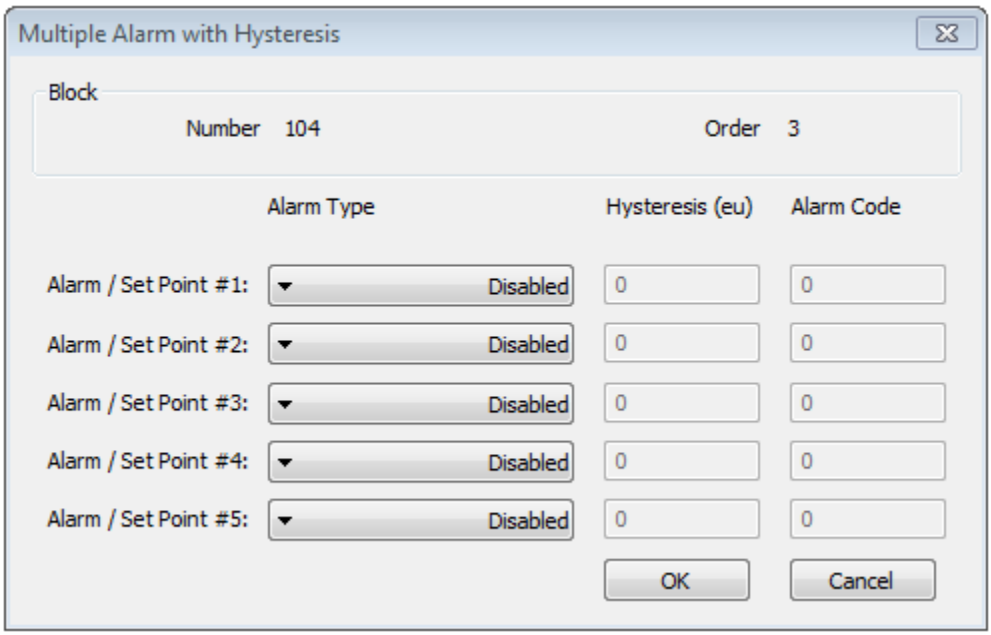

Configuration parameters

Table 62 MALM function block configuration parameters

Parameter	Index #	Parameter Description	Value or Selection
Block Order	N/A	Execution Order for Block	Read Only. To change block order, right-click on a Function Block and select Execution Order.
Tag Name	N/A	32-characters unique tag name (ASCII characters only)	Up to 32-characters
Descriptor	N/A	Block description	Up to 32-characters
Alarm Type	N/A	Alarm type	PV>SP = High Process Variable/Local Setpoint PV>CV = High Process Variable /Compare Value PV<SP = Low Process Variable/Local Setpoint PV<CV = Low Process Variable /Compare Value (PV-CV)>SP = High Deviation Alarm (CV-PV)>SP= Low Deviation Alarm |PV-CV|>SP = Band Absolute Deviation Alarm |PV-CV|<SP = In Band Absolute Deviation Alarm Disabled
Hysteresis	5-9	Adjustable overlap of the on/off state of the Alarm output	0 to the span of the input in engineering units. It is positive value.
Alarm Code	10-14	Alarm code for each alarm to indicate priority of. High number indicates highest priority among all	It is in the range of 0-1000

STK Stack light

Description

The **STK** label stands for the **Stack Light** function**.**

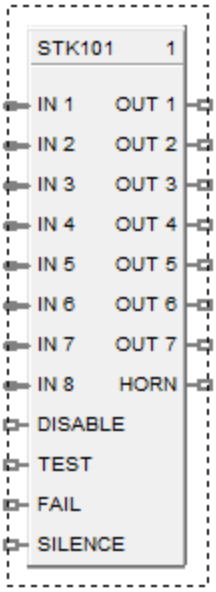

This block is part of the *Alarm/Monitor* category.

Function

Stack replicates a single stack light function. The stack block drives outputs based on the configured alarm code and assigned action. The assigned actions are OFF, ON or Flash. The flash rate is configured with in the block by setting the ON and OFF times of the alarm code row. The Stack only activates on alarm priorities. The 8 Inputs are for 8 potential MALM FB's to input to the Stack FB.

Inputs

IN x - Input Alarm Code from MALM block

DISABLE - Disable the Alarm Priorities. [This pin when high overrides all other inputs and configuration conditions]

TEST - Enable Test priority

FAIL - Enable Fail Priority

SILENCE - Silence the Alarm Sound (i.e. HORN = OFF) when silence pin is switched from OFF to ON

Where x = {1-8}

Outputs

OUT x - Output

HORN - Horn/Hooter output

Where x = {1-7

Block properties

Double click on the function block to access the function block properties dialog box.

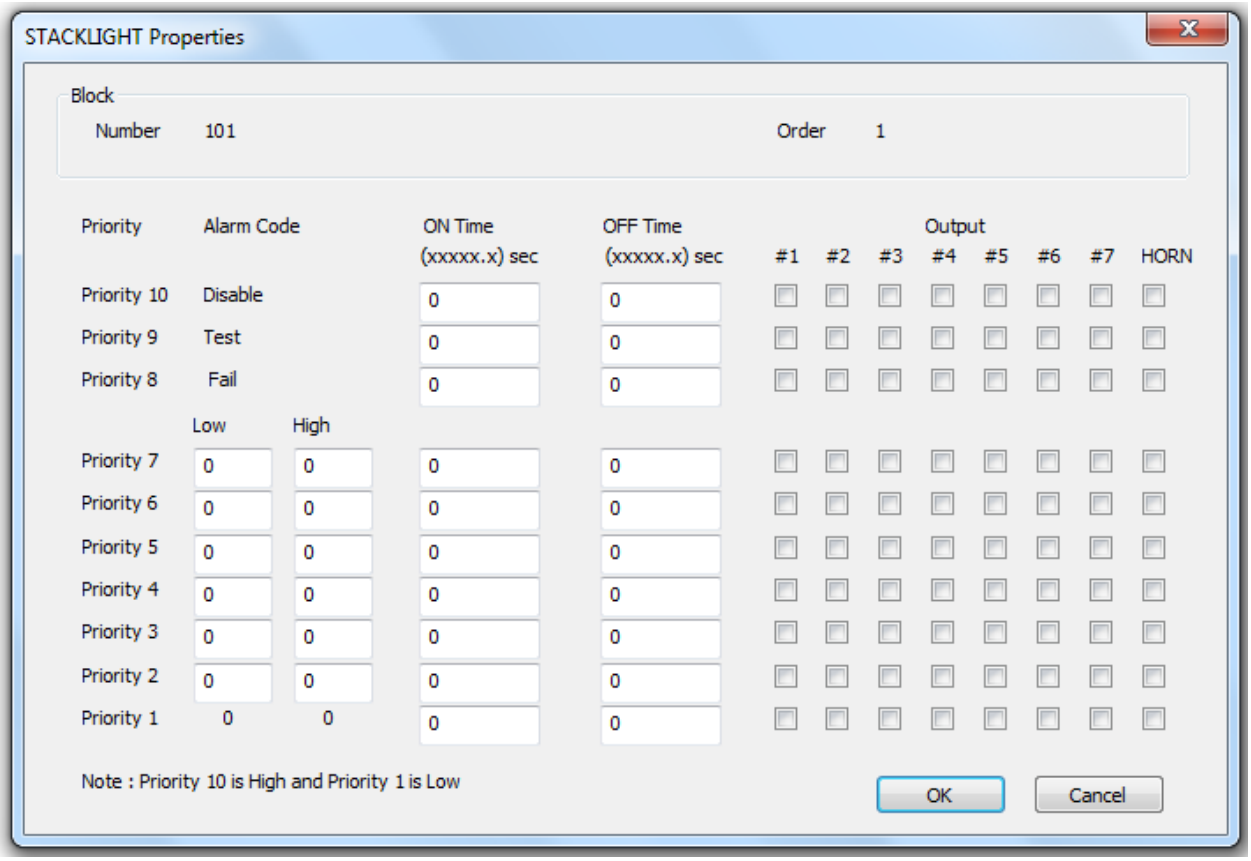

Configurable Parameters

Parameter	Index #	Parameter Description	Value or Selection
Block Order		Execution Order for Block	Read Only. To change block order, right-click on a Function Block and select Execution Order.
Tag Name	N/A	32-characters unique tag name (ASCII characters only)	Up to 32-characters
Descriptor	N/A	Block description	Up to 32-characters
Alarm Code Low	0-5	Lower limit for alarm code range	It is in the range of 1-1000 Alarm code 0 is used for priority 1.
Alarm Code High	6-11	Upper limit for alarm code range	It is in the range of 1-1000 Alarm code 0 is used for priority 1.
ON time	12-21	On time for flashing	It is in the range of 0-99999.9
OFF Time	22-31	Off Time for flashing	It is in the range of 0-99999.9

MBR Modbus Read Function Block

Description

The **MBR** label stands for **Modbus Read.** This block is part of the *Communications* category. It looks like this graphically.

Function

A communication function block that expands the read capability of the Modbus Device function block to 16 additional data points. Multiple blocks may be connected to the same Modbus Device block.

The Modbus read block has no inputs and 16 outputs. Up to 16 registers can be configured as the source of data for the outputs.

The configuration data for each point will consist of:

- the address of the source device on the Modbus link,
- the register address of the desired data,
- and the register type: Integer, Float, or Bit Packed.

The sixteen outputs can be connected or tagged in the same manner as any other function block output.

Inputs

ADDR = Device address from associated MBS block. (Must be connected to a MBS block)

Outputs

RD1 through RD16 – Last read value from selected address

Block properties

Double click on the function block to access the function block properties dialog box.

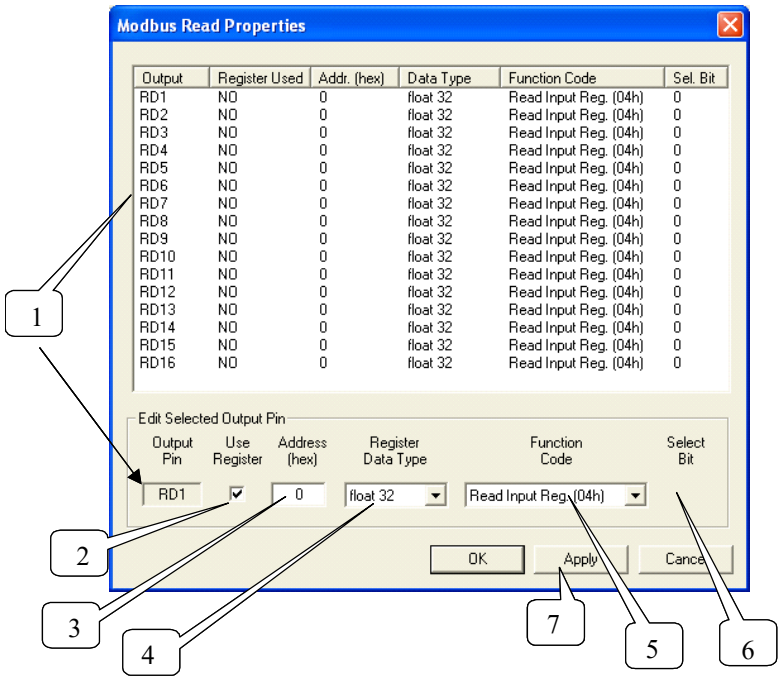

Configuration parameters

You must configure the MBR function Block Output Pins as shown in the "Edit Selected Output Pin" portion of the dialog box. Follow the numbered sequence shown above referring to Table 63.

Table 63 MBR function block configuration parameters

Sequence Number	Parameter Field	Action	Selections	Comments
1		Click on an Output Pin from the list of pins in the upper portion of the dialog box.	RD1 through RD16	The selected Output Pin will appear in the Output Pin Field.
2		Click on the "Use Register" field to assign a register to the Output pin.	RD1 through RD16	YES will be indicated in the "Register used" column when you select "Apply
3		Type in the address of the register (in Hex) on the device		

Sequence Number	Parameter Field	Action	Selections	Comments
4	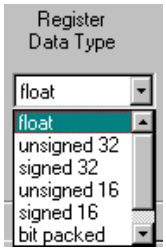	From the drop down menu, select the Register Data Type	• Float • Unsigned 32 • Signed 32 • Unsigned 16 • Signed 16 • Bit Packed • Single Bit	If read as an integer, the output is converted to a floating point.
5	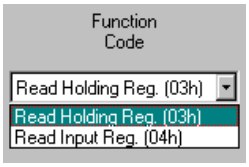 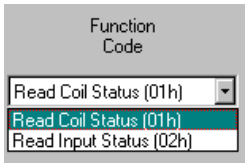	Select a function code for **"Float, Unsigned, Signed, or Bit Packed"** register data type Select a function code for **"Single Bit"** Register data type.	• Read Holding Reg – Function Code 03 • Read Input Registers – Function Code 04 • Read Coil Status – Function Code 01 • Read Input Status – Function Code 02	Function code 03 or Function code 04 is used to read the contents of input registers in the device. Function code 01 is used to read a device coil's (discrete output's) ON/OFF status of the device in a binary data format. Function code 02 is used to read a input's (discrete input's) ON/OFF status of the device in a binary data format. Output is floating point equivalent (0.0 or 1.0). NOTE: Refer to the Communications manual for the function codes supported by the specific device.
6		Select which bit (0-15) to read when Register Data Type = Bit Packed	0 to 15	If read as a bit packed number, you must select which bit to mask (0-15). The output will be the floating-point equivalent (0.0 or 1.0) of the masked bit.
7	You must press [APPLY] to accept the register changes.			

Example

Figure 53 shows a Function Block Diagram using Modbus function blocks.

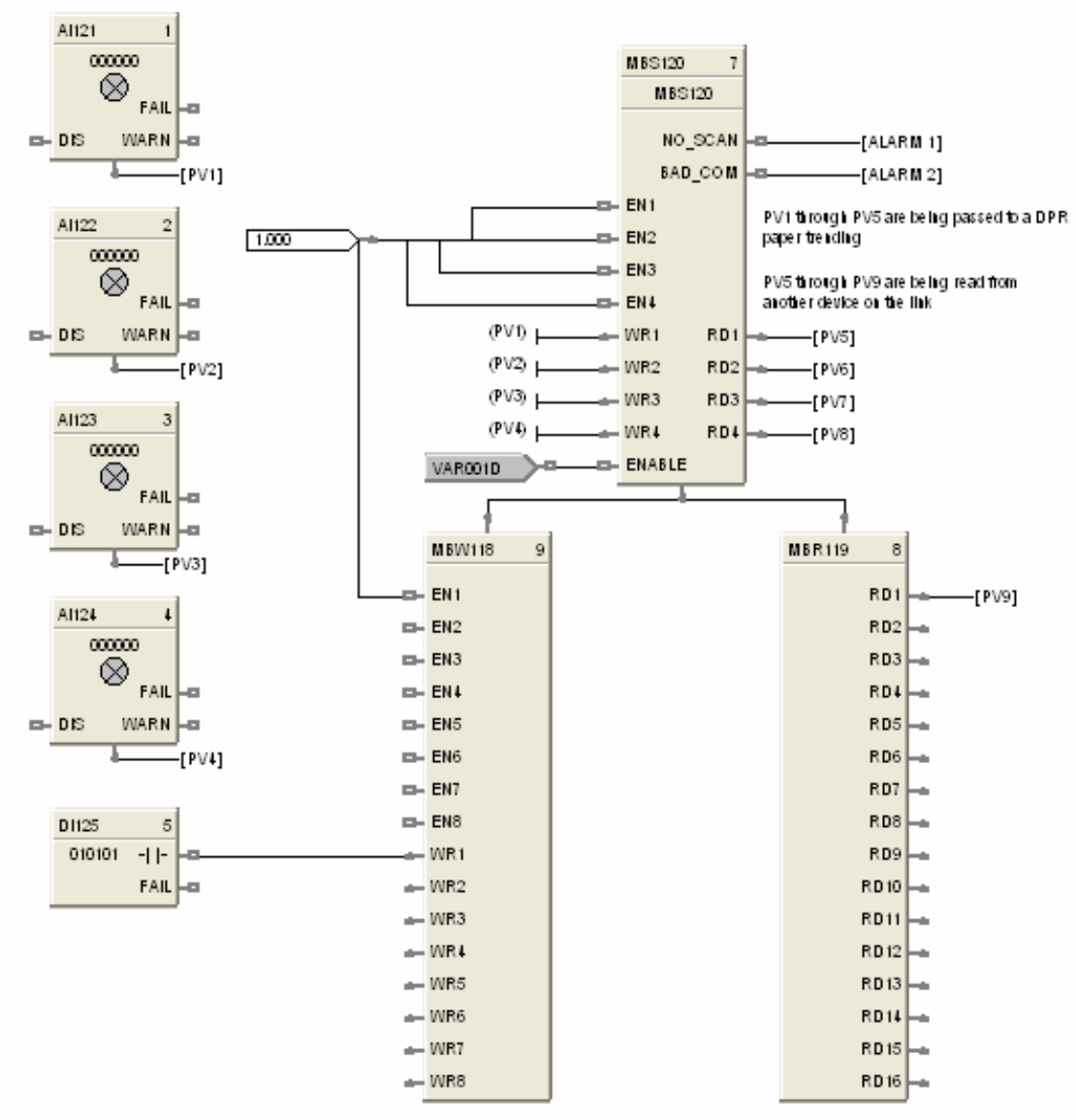

Figure 53 MBR function block example

MBS Modbus Device Function Block

Description

The **MBS** label stands for **Modbus Device Status.** This block is part of the *Communications* category. It looks like this.

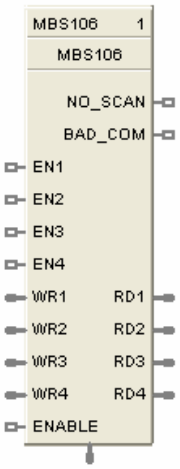

Function

A communication function block that is internally assigned to the configured S1 or S2 serial port that allows the controller to act as a modbus host device and communicate with modbus device using the Modbus RTU protocol. Requires one block per device, up to 32 devices maximum. Only one block may be assigned to each device. It supports 4 read and 4 write parameters plus provides digital indication of communication integrity.

Inputs

ENABLE = [ON] Device is in scan -
If the Enable pin **IS** connected, then enabling/disabling follows the state of the Enable pin of the block and the enable/disable function on the diagnostic page of the HC Designer is grayed out.

If the Enable pin is **NOT** connected, then the user must be in Monitor mode, Monitoring Serial Modbus Diagnostics in the HC Designer, select the device to be enabled or disabled, and click the Enable (or Disable) button.

EN1 through EN4 = [ON] Data value written once per scan

WR1 through WR4 = Values to be written to the selected register

ATTENTION

- This block does not support bit packing writing.
- If the register is an integer data type, the floating point input will be rounded up prior to writing to the address register.
- Message broadcasting is not supported on the HC900.
- MBS expects field device to be online & ready for communications on power-up.
  If devices starting at the same time, it is common to insert time-delay main “Enable” pin on Start or Restart from ASYS.
  After ~ 10-Bad Attempts, “NO SCAN” pin goes high.
  Delay between each future interrogation incrementally increases with each check.

Outputs

RD1 through RD4 = Last read value from the selected address

NO_SCAN = Scan Indication
ON = Device is “Out of Scan”
OFF = Device is “In Scan”.

BAD_COM = Communications Indication
ON = Bad quality or device not defined
OFF = Good Communications

ADDR = Device Address for use with MBR and MBW function blocks

ATTENTION

- Integer values are converted to floating point values prior to output.
- If a Modbus device does not respond to a request, the last output value will be maintained.

Block properties

Double click on the function block to access the function block properties dialog box.

Configuration parameters

The ON/OFF properties dialog box is divided into Three tab cards:

GENERAL
READ
WRITE

`Click on the tab to access the properties for that tab.`

GENERAL tab

It looks like this graphically.

Table 64 describes the parameters and the value or selection.

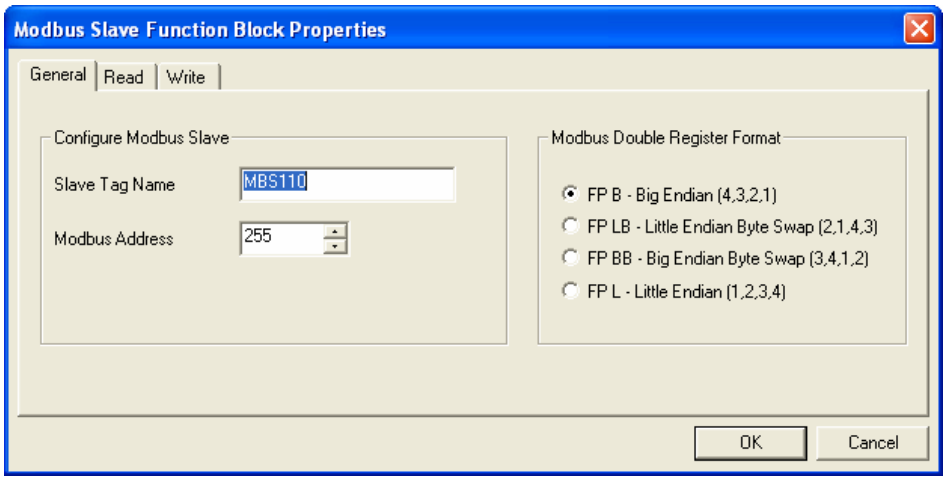

Table 64 MBS Block General tab configuration parameters

Properties Function	Parameter	Index #	Parameter Description	Value or Selection
Configure Modbus Device	Device Tag Name	N/A	Description of Device	16-character tag name (ASCII characters only) Device address and Tag Name must be unique within a control file.
	Modbus Address	N/A	Address of Device on the Modbus link	Enter unique address between 1 and 247 Default MB address = 255 which means device will **NOT** be in scan
Modbus Double Register Format	Each IEEE 32-bit floating point number requires two consecutive registers (four bytes) starting with the register defined as the starting register for the information. The stuffing order of the bytes into the two registers differs among Modbus hosts. The selections are:			

Selection	Description	Byte order
FP B	Floating Point Big Endian Format	4, 3, 2, 1
FP BB	Floating Point Big Endian with byte-swapped	3, 4, 1, 2
FP L	Floating Point Little Endian Format	1, 2, 3, 4
FP LB	Floating Point Little Endian with byte-swapped	2, 1, 4, 3

READ tab

It looks like this graphically.

Table 65 describes the parameters and the value or selection.

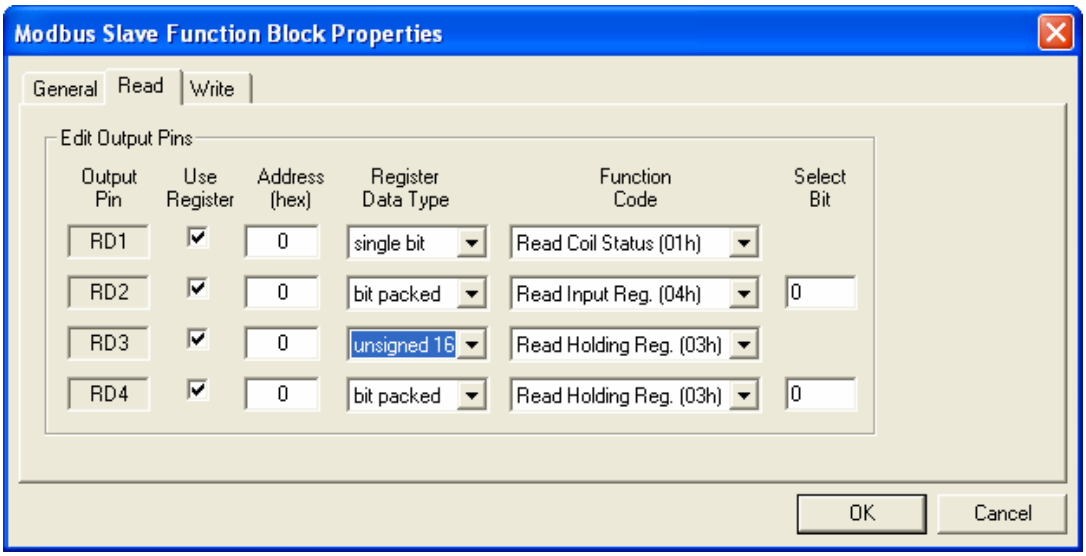

Table 65 MBS Block Read tab configuration parameters

Properties Function	Parameter	Index #	Parameter Description	Value or Selection
Edit Output Pins	**Output Pin**	N/A	Output pin designation	Register request assigned to RD1, RD2, RD3, or RD4 pin
	Use Register	N/A	Register Request	Click on the “Use Register” field to assign a register to the Output pin.
	Address (hex)	N/A	Register Address	Type in the address of the Read register (in Hex) on the device **NOTE: A single configuration may contain up to 256 enabled registers.**
	Register Data Type	N/A	Register data type	From the drop down menu, select the Register Data Type • Float • Unsigned 32 • Signed 32 • Unsigned 16 • Signed 16 • Bit Packed • Single Bit If read as an integer, output is converted to floating point equivalent.

Properties Function	Parameter	Index #	Parameter Description	Value or Selection
	Function Code	N/A	Several standard Modbus RTU function codes are supported. These standard function codes provide basic support for IEEE 32-bit floating point numbers and 16-bit integer register representation of instrument's process data	Function code **03 – Read Holding Registers** or Function code **04 – Read Input Registers** is used to read the contents of input registers in the device. **Supported Data Types for Function Codes 03 and 04.** From the drop down menu, select a function code for **"Float, Unsigned, Signed, or Bit Packed"** register data type Function code **01 – Read Coil Status** is used to read the coil's (discrete output's) ON/OFF status of the device in a binary data format. Function code **02 – Read Input Status** is used to read the input's (discrete input's) ON/OFF status of the device in a binary data format. **Supported Data Types for Function Codes 01 and 02.** Select a function code for **"Single Bit"** Register data type. NOTE: Refer to the Communications manual for the function codes supported by the specific device.
	Select Bit	N/A	Bit to read when Read register's data type = Bit Packed You must then select which bit to mask (0-15). The output will be the floating-point equivalent (0.0 or 1.0) of the masked bit.	0-15

Write tab

It looks like this graphically. Table 66 describes the parameters and the value or selection.

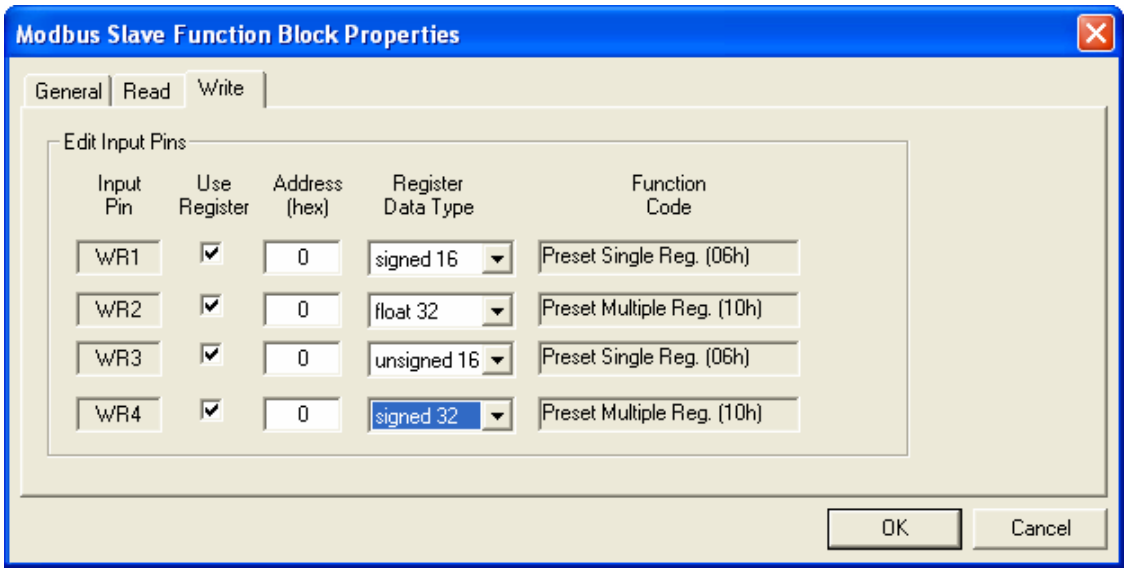

Table 66 MBS Block Write tab configuration parameters

Properties Function	Parameter	Index #	Parameter Description	Value or Selection
Edit Input Pins	**Input Pin**	N/A	Input pin designation	Register request assigned to WR1,WR2,WR3, or WR4 pin
	Use Register	N/A	Register Request	Click on the “Use Register” field to assign a register to the Input pin.
	Address (hex)	N/A	Register Address	Type in the address of the Write register (in Hex) on the device
	Register Data Type	N/A	Register data type	From the drop down menu, select the Register Data Type • Float • Unsigned 32 • Signed 32 • Unsigned 16 • Signed 16 • Single bit

Properties Function	Parameter	Index #	Parameter Description	Value or Selection
	Function Code	N/A	Several standard Modbus RTU function codes are supported. These standard function codes provide basic support for IEEE 32-bit floating point numbers and 16-bit integer register and single bit representation of instrument's process data Preset Single Registers – Function Code 06 Preset Multiple Registers – Function Code 10 hex	The function code for **"Unsigned 16 or Signed 16,"** register data type is **06 – Preset Single Registers*** presets integer value into a single register.. The function code for **"Float, Unsigned 32 or Signed 32,"** register data type is **10 hex – Preset Multiple Registers*** presets values into holding registers. **automatically selected when you select "Register Data Type"* NOTE: Refer to the Communications manual for the function codes supported by the specific device.

Example

Figure 54 shows a Function Block Diagram using Modbus function blocks.

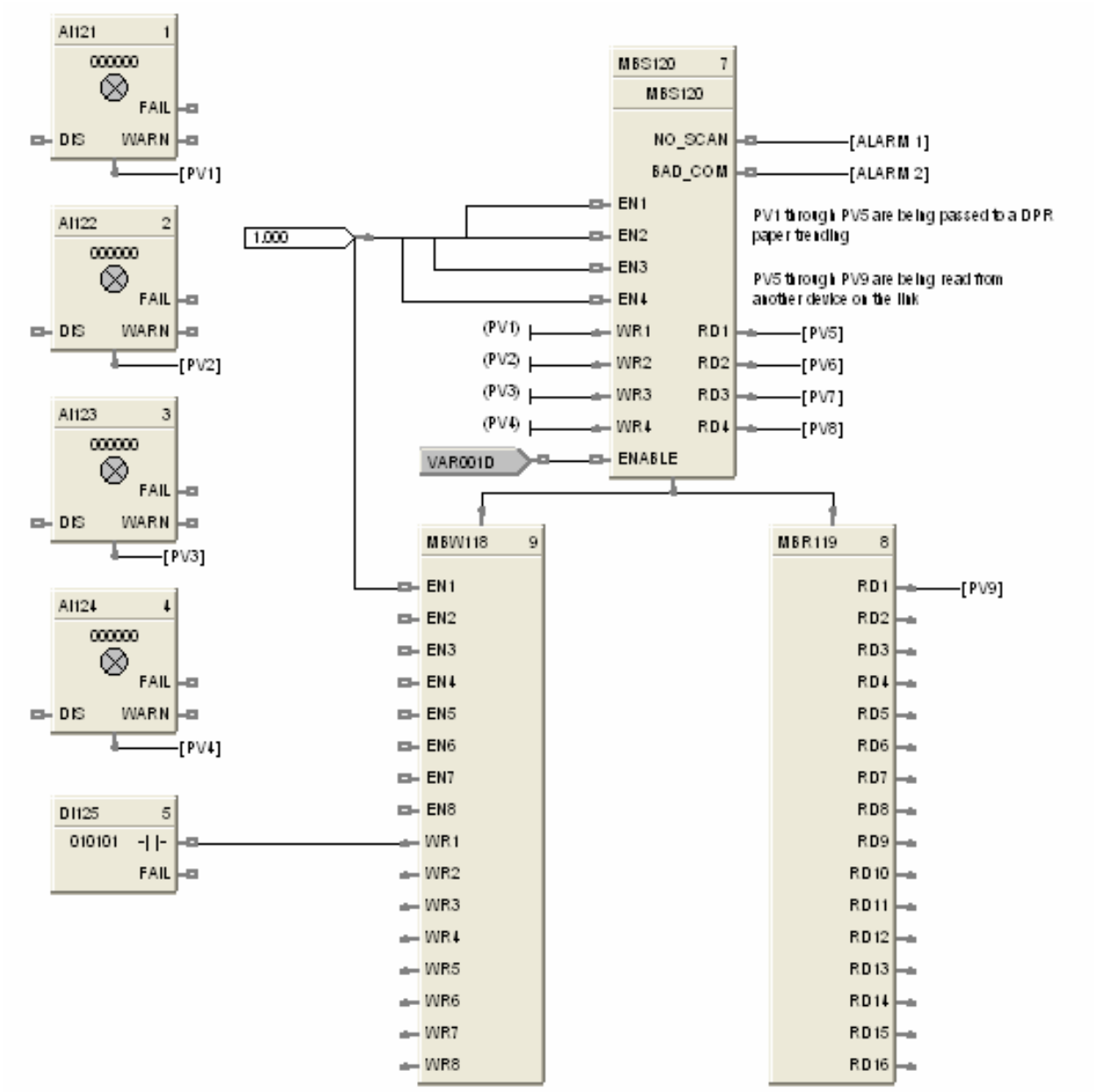

Figure 54 MBS function block example

MBW Modbus Write Function Block

Description

The **MBW** label stands for **Modbus Write.** This block is part of the *Communications* category. It looks like this graphically.

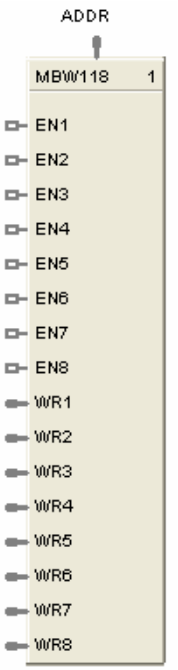

Function

A communication function block that expands the write capability of the Modbus Device function block to 8 additional data points. Multiple blocks may be connected to the same Modbus Device block.

The Modbus write block has 8 inputs and no outputs. The Modbus destination for each of the eight inputs can be configured. An enable pin lets the data value be written once per scan.

The configuration data for each point will consist of : the address of the destination device on the Modbus link, the register address of the desired data, and the register type: Integer or Float.

Inputs

EN1 through EN8 = [ON] Data value is written once per scan

WR1 through WR8 = Value to be written to the selected register address.

ADDR = Device address from associated MBS block. *(Must be connected to MBS block)*

Outputs

None

Block properties

Double click on the function block to access the function block properties dialog box.

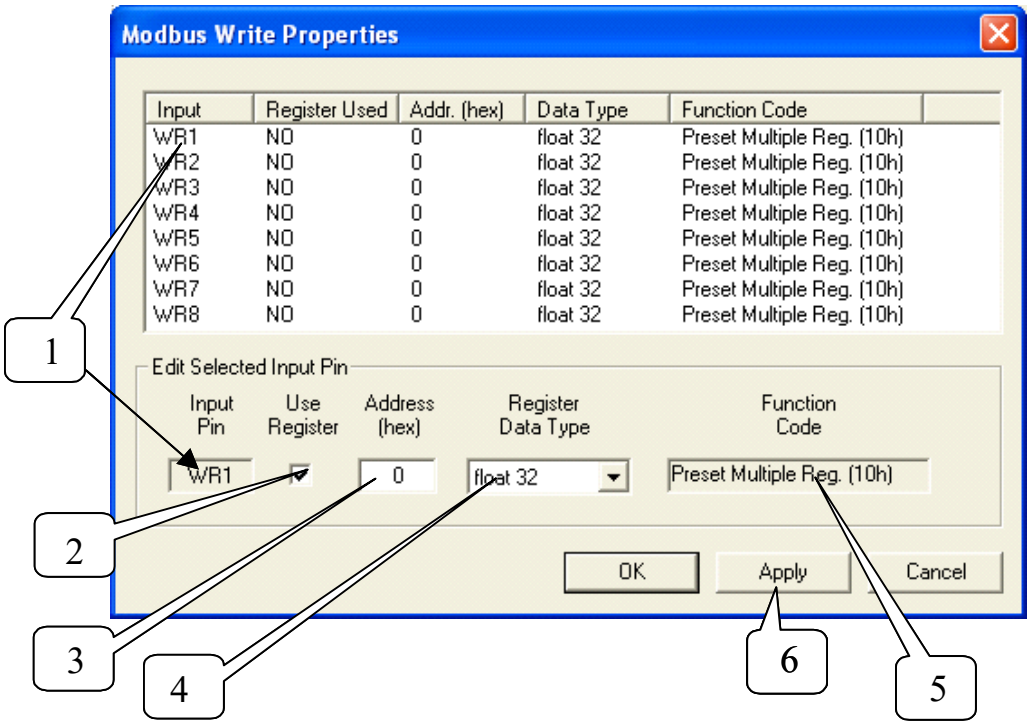

Configuration parameters

You must configure the MBW function Block Input Pins as shown in the "Edit Selected Input Pin" portion of the dialog box. Follow the numbered sequence shown above referring to Table 67.

Table 67 MBW function block configuration parameters

Sequence Number	Parameter Field	Action	Selections	Comments
1	Input Pin WR1	Click on an Input Pin from the list of pins in the upper portion of the dialog box. The selected Input Pin will appear in the "Input Pin" Field.	WR1 through WR8	
2	Use Register ☑	Click on the "Use Register" field to assign a register to the Input pin. YES will be indicated in the "Register Used" column when you select "Apply" .	WR1 through WR8	

Sequence Number	Parameter Field	Action	Selections	Comments
3		Type in the address of the register (in Hex) on the device		
4	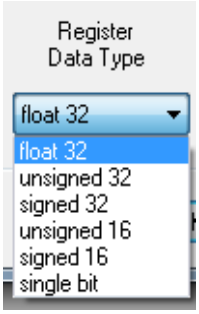	From the drop down menu, select the Register Data Type	• Float • Unsigned 32 • Signed 32 • Unsigned 16 • Signed 16 • Single bit	Several standard Modbus RTU function codes are supported. These standard function codes provide basic support for IEEE 32-bit floating point numbers and 16-bit integer register representation of instrument's process data. (see Sequence Number 5 below)
5	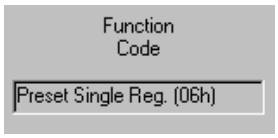 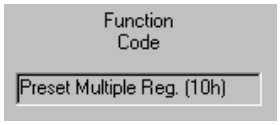 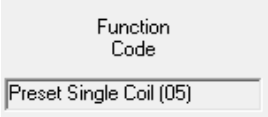	The function code for **"Unsigned 16 or Signed 16** register data type is (06)* The function code for **"Float, Unsigned 32 or Signed 32** register data type is (10 hex)* **automatically selected when you select "Register Data Type"*	• Preset Single Registers – Function Code 06 • Preset Multiple Registers – Function Code 10 hex	Function code 06 presets integer value into a single register. Function Code 10 hex presets values into holding registers. NOTE: Refer to the Communications manual for the function codes supported by the specific device.
6	You must press [APPLY] to accept the register changes.			

Example

Figure 55 shows a Function Block Diagram using an Modbus function blocks.

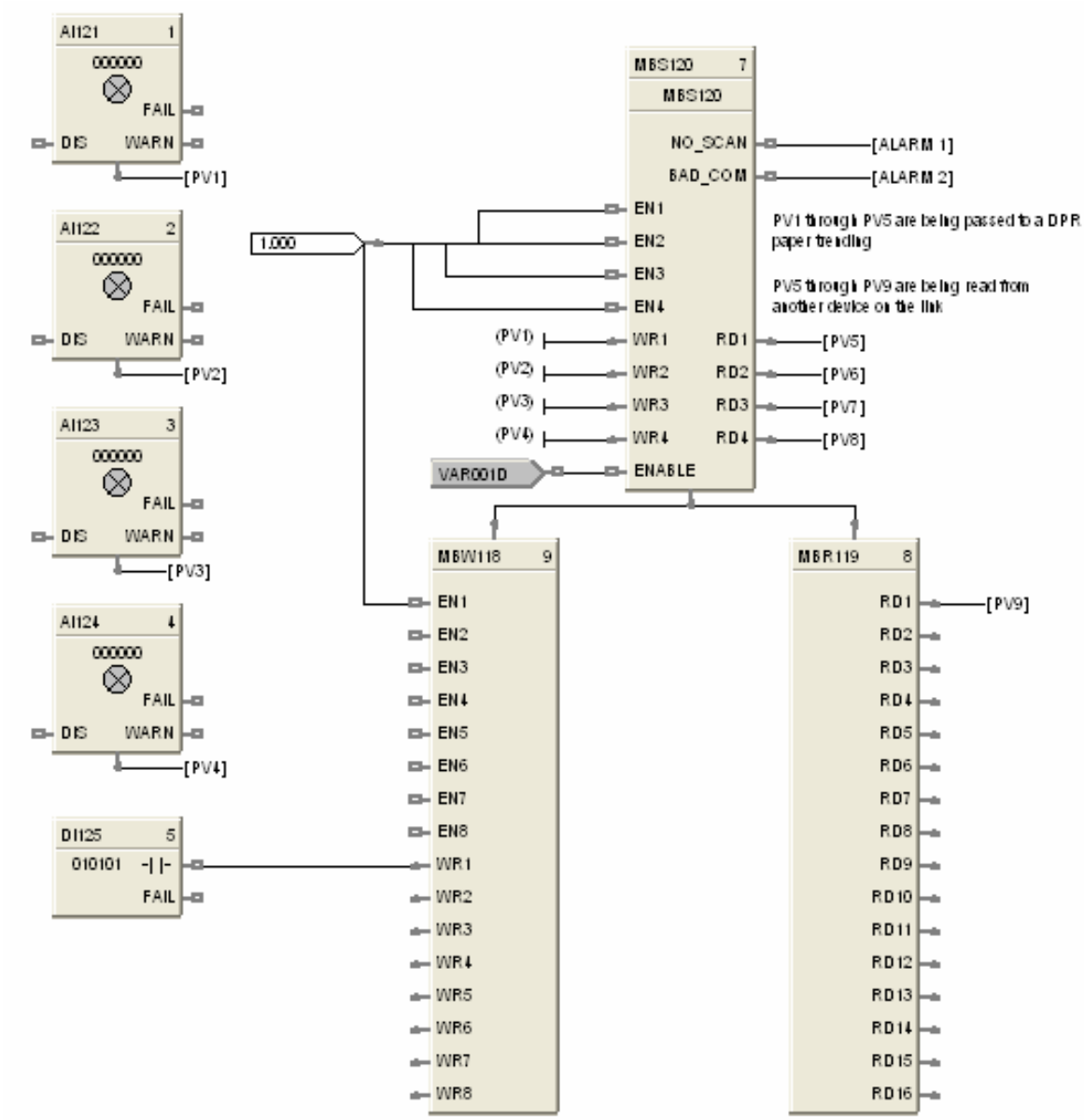

Figure 55 MBW function block example

MDSW Mode Switch Function Block

Description

The **MDSW** label stands for **Mode Switch.**

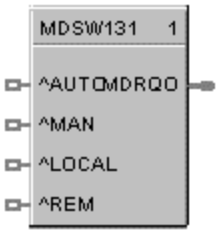

This block is part of the *Loops* category.

Function

Digital interface to control loops to select automatic or manual modes and/or local or remote setpoint. Connects to PID, ON/OFF, CARB, or TPSC mode block input.

Inputs

AUTO = Automatic Output mode (OFF to ON* sets MDRQO to Automatic control mode)

MAN = Manual Output mode (OFF to ON* sets MDRQO to Manual control mode)

LOCAL = Local Setpoint mode (OFF to ON* sets MDRQO to Local Setpoint mode)

REM = Remote Setpoint mode (OFF to ON* sets MDRQO to Remote Setpoint mode)

* for one control cycle

Output

MDRQO (Mode Request Output) = The output of this block must connect to the MDRQI input of a PID, CARB, TPSC, or ON/OFF function block.

Block properties

Double click on the function block to access the function block properties dialog box.

Example

Figure 56 shows a Function Block Diagram using an MDSW function block.

Application: External mode switching of the PID Block - changing a loop to MAN, to AUTO, to LOCAL SP, or REMOTE SP.

ATTENTION

Mode switching is also provided as an integral part of the Operator Panel, Loop Displays.

The MDSW (Mode Switch) Function Block is used exclusively with the MDRQI (Mode Request Input) of the PID, ON/OFF, CARB< or TPSC Function Block. Its output provides encoded switch commands to the PID Block.

All inputs are OFF to ON edge-triggered, requiring a separate input for each action. The example shows digital inputs as the transfer inputs but any digital status could be used.

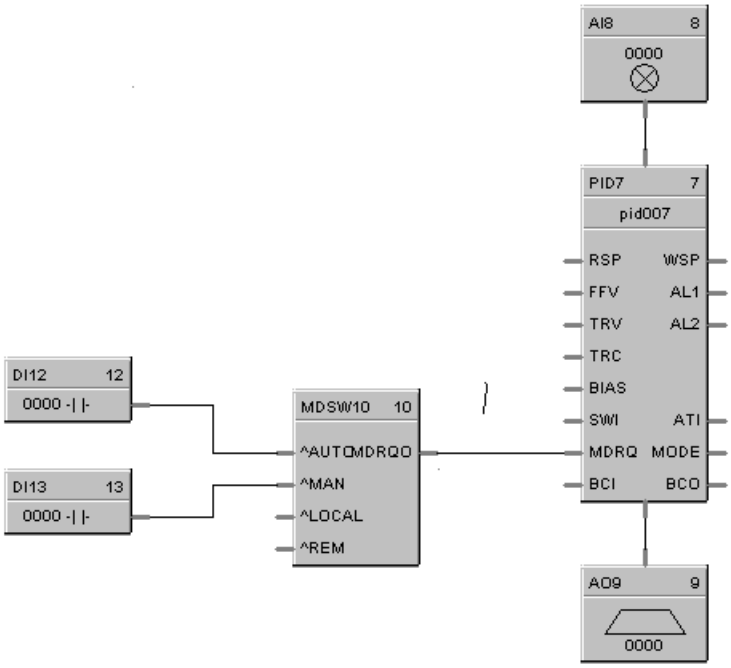

Figure 56 MDSW function block example

MDFL Mode Flag Function Block

Description

The **MDFL** label stands for **Mode Flag.**

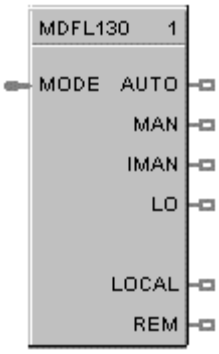

This block is part of the *Loops* category.

Function

Turns ON the output that corresponds to the current value of MODE.

Turns OFF all other outputs.

Input

MODE = The MODE input must connect to the MODE output of a PID, CARB, TPSC, or ONOFF function block.

Output

REM = ON	If MODE = Remote Setpoint
LOCAL = ON	If MODE = Local Setpoint
AUTO = ON	If MODE = Automatic Control
MAN = ON	If MODE = Manual Control
IMAN = ON	If MODE = Loop in Initialization Manual
LO = ON	If MODE = Local Override

Block properties

Double click on the function block to access the function block properties dialog box.

Example

Figure 57 shows a Function Block Diagram using an MDFL function block. The mode output of the PID Block is used exclusively with the MDFL (Mode Flags) Block.

Any of the status outputs may be referenced by a Signal Tag or may be transferred externally using a DO.

The output shown is ON when in Manual and OFF when in Automatic.

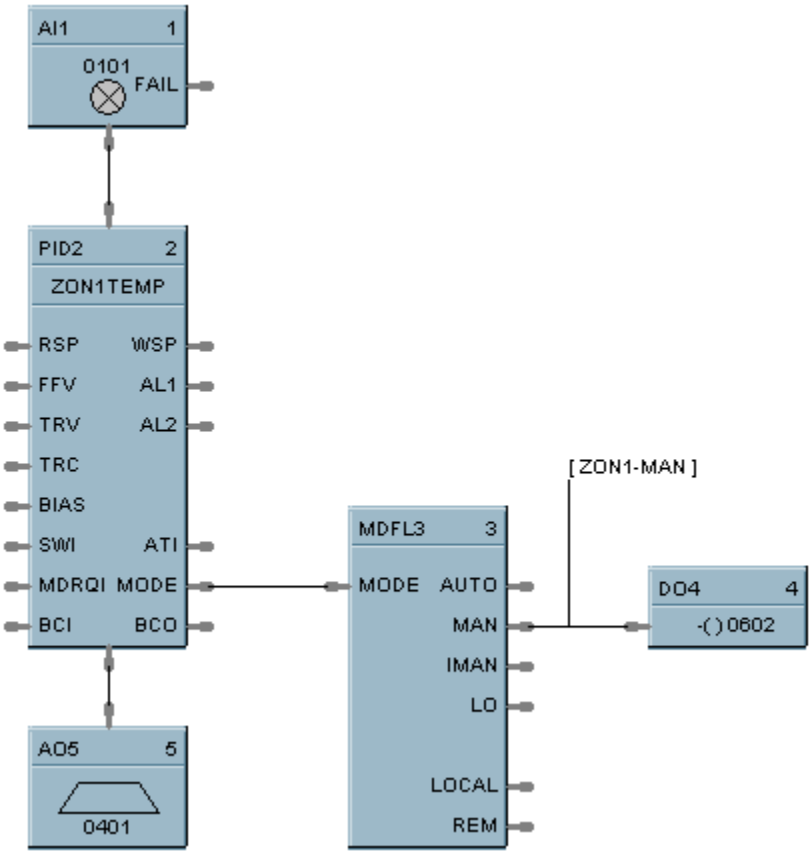

Figure 57 MDFL function block example

MMA Min/Max/Avg Function Block

Description

The MMA label stands for Min-Max-Average-Sum.

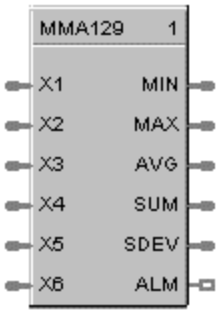

This block is part of the *Calculations* category.

Function

Accepts inputs from up to six analog input values (X1 - X6) and calculates these values for output:

- MIN - Minimum input value
- MAX - Maximum input value
- AVG - Average of the 6 input values
- SUM - Sum of the 6 input values
- DEV - Standard deviation of the 6 input values
- ALM - Alarm output for deviations

Turns ON ALM when any input is outside the configured number of standard deviations when the configuration parameter DEV > 0.

- If DEV configured < 0, then:
  - no standard deviation is calculated;
  - all inputs connected to the block are used to calculate the MIN, MAX, AVG, AND SUM outputs.
- If DEV configured = 0, then:
  - the standard deviation is calculated for the number of inputs connected to the block, and
  - all inputs connected to the block are used to calculate the MIN, MAX, AVG, and SUM outputs.
- If DEV configured > 0, then:
  - the standard deviation is calculated for the number of inputs connected to the block, and SDEV = result;
  - any inputs that deviate more than [DEV *SDEV] i.e., the configured number (DEV) of standard deviations (SDEV), from the average are not used to calculate the MIN, MAX, AVG, and SUM outputs;
  - if any input deviates more than [DEV *SDEV] i.e., the configured number (DEV) of standard deviations ALM turns ON;

– if all inputs deviate more than [DEV *SDEV] i.e., the configured number (DEV) of standard deviations(SDEV), then the MIN, MAX, AVG, and SUM outputs all equal zero (0), and ALM turns ON.

- Standard Deviation (SDEV) = $\sqrt{\dfrac{\sum_{i=1}^{i=n} (X_i - \overline{X})^2}{n}}$

where: $\overline{X}$ = AVG
n = the number of connected inputs.

Input

X1 = First analog value.

X2 = Second analog value.

X3 = Third analog value.

X4 = Fourth analog value.

X5 = Fifth analog value.

X6 = Sixth analog value.

Output

MIN = Calculated minimum analog value.

MAX = Calculated maximum analog value.

AVG = Calculated average of analog values.

SU = Calculated sum of analog values.

SDEV = Square root of Z divided by N, where Z = the sum of individual squared deviations from the average of the first n inputs.

ALM = Digital signal for alarm indication.

Block properties

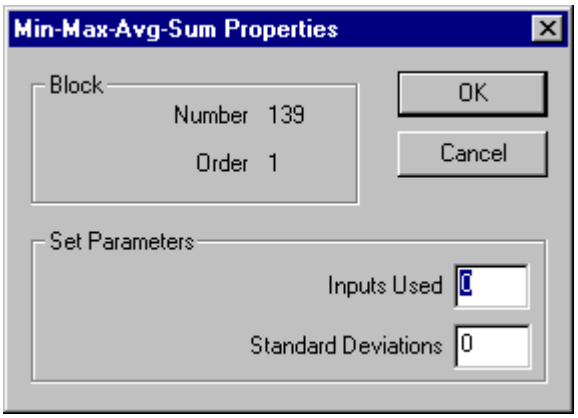

Double click on the function block to access the function block properties dialog box.

Configuration parameters

Table 68 Min/Max/Ave/Sum function block configuration parameters

Properties Group	Parameter	Index #	Parameter Description	Value or Selection
Set Calculation Parameters	**Inputs Used**	N/A	Number of inputs connected to block (Connect inputs in numerical order; that is, unused inputs from the bottom up - X6, X5, etc.) Unused inputs default to 0.	1 to 6
	Standard Deviations	1	Number of standard deviations within which inputs are used for calculation	–99999 to 99999 <0 No Standard Deviation =0 Standard Deviation with no alarm >0 Standard Deviation with alarm

Example

Figure 58 shows a Function Block Diagram using an MMA function block. In this application, control is determined by automatic selection of the lowest or highest sensor, such as a thermocouple. As shown the MMA block is configured for highest (MAX).

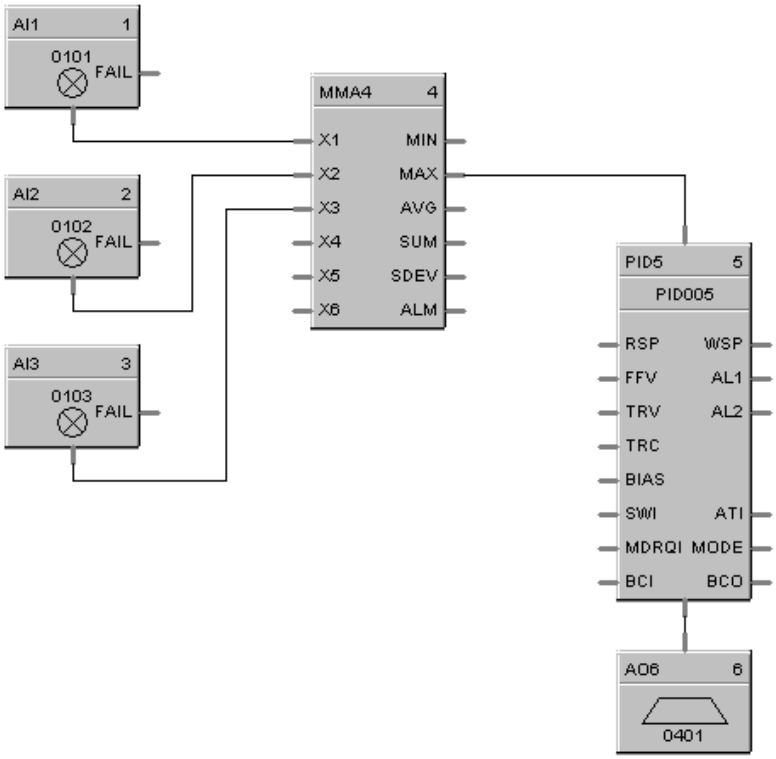

Figure 58 MMA function block example

8MMA – Similar to the original MMA with auto-pruning of input channel used in the calculation.

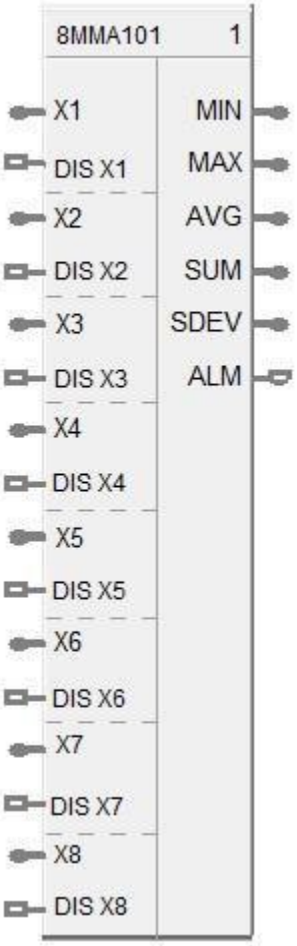

Description

The 8MMA label stands for Eight Min-Max-Average-Sum. This block is part of the Calculations category.

Function

Accepts inputs from up to eight analog input values (X1 – X8) with individual disables and calculates these values for output:

MINimum input value

MAXimum input value

AVeraGe of input values

SUM of input values

Standard DEViation value

ALarM output for deviations

Turns ON ALM when any input is outside the configured number of standard deviations when the configuration parameter DEV > 0.

If DEV configured < 0, then:

– no standard deviation is calculated;

– all inputs connected to the block are used to calculate the MIN, MAX, AVG, AND SUM outputs

If DEV configured = 0, then:

– the standard deviation is calculated for the number of inputs connected to the block, but

– all inputs connected to the block are used to calculate the MIN, MAX, AVG, and SUM outputs.

If DEV configured > 0, then:

– the standard deviation is calculated for the number of inputs connected to the block, and SDEV = result;

– any inputs that deviate more than [DEV * SDEV] i.e. the configured number (DEV) of standard deviations(SDEV), from the average are not used to calculate the MIN, MAX, AVG, and SUM outputs.

– if any input deviates more than [DEV * SDEV] i.e. the configured number (DEV) of standard deviations (SDEV), ALM turns ON.

– if all inputs deviate more than [DEV * SDEV] i.e. the configured number (DEV) of standard deviations(SDEV), then the MIN, MAX, AVG, and SUM outputs all equal zero (0), and ALM turns ON.

$$\text{Standard Deviation (SDEV)} = \sqrt{\frac{\sum_{i=1}^{i=n}\left(X_i - \overline{X}\right)^2}{n}}$$

where

$\overline{X}$ = AVG

n = the number of enabled connected inputs.

Input

X1 = First analog value.
X2 = Second analog value.
X3 = Third analog value.
X4 = Fourth analog value.
X5 = Fifth analog value.
X6 = Sixth analog value.
X7 = Seventh analog value.
X8 = Eight analog value.
Dis X1 = Disable X1 Input.
Dis X2 = Disable X2 Input.
Dis X3 = Disable X3 Input.
Dis X4 = Disable X4 Input.
Dis X5 = Disable X5 Input.
Dis X6 = Disable X6 Input.
Dis X7 = Disable X7 Input.
Dis X8 = Disable X8 Input.

Output

MIN = Calculated minimum enabled analog value.
MAX = Calculated maximum enabled analog value.
AVG = Calculated average of enabled analog values.
SU = Calculated sum of enabled analog values.
SDEV = Square root of Z divided by N, where Z = the sum of individual squared deviations from the average of the first n inputs.
ALM = Digital signal for alarm indication.

Configurable Parameters

Parameter	Index#	Description	Value or Selection
Standard Deviations	1	Number of standard deviations within which inputs are used for calculation	–99999 to 99999 <0 No Standard Deviation =0 Standard Deviation with no alarm >0 Standard Deviation with alarm

MSF Mass Flow Calculation Function Block

Description

The MSF label stands for Mass Flow Calculation.

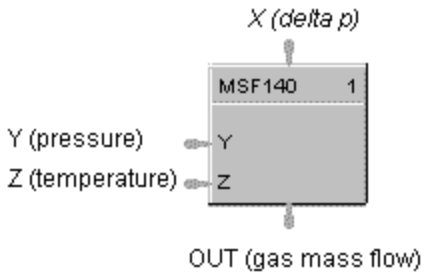

This block is part of the *Calculations* category.

Function

Calculates gas mass flow (OUT) from differential pressure input value (X) that represents a pressure drop across an orifice plate (for example). It accepts two other inputs to include pressure (Y) and/or temperature (Z) compensation in the calculation. The calculation includes square root extraction.

- OUT = Kq * sqrt [(dP * P) / T]

Kq	=	Orifice Constant
dP	=	Differential pressure which
	=	(Kx * X) + Bx; *where:*

Kx = Delta pressure scaled for desired engineering units
X = Analog input value
Bx = Delta pressure bias in desired engineering units

P	=	Absolute gas pressure which
	=	(Ky * Y) + By; *where:*

Ky = Pressure scaler for desired engineering units
Y = Gas pressure analog input value
By = Pressure bias in desired engineering units

T	=	Absolute gas temperature which
	=	(Kz * Z) + Bz; *where:*

Kz = Temperature scaler for desired engineering units
Z = Gas temperature analog input value
Bz = Temperature bias in desired engineering units

If (Kz Z) + Bz = 0, then: OUT = 0*

- If calculation is <= Dropoff, OUT = 0, else OUT = Calculation

Input

X = Differential pressure analog value.
Y = Gas pressure analog value.
Z = Gas Temperature analog value.

Output

OUT = Calculated analog value

Block properties

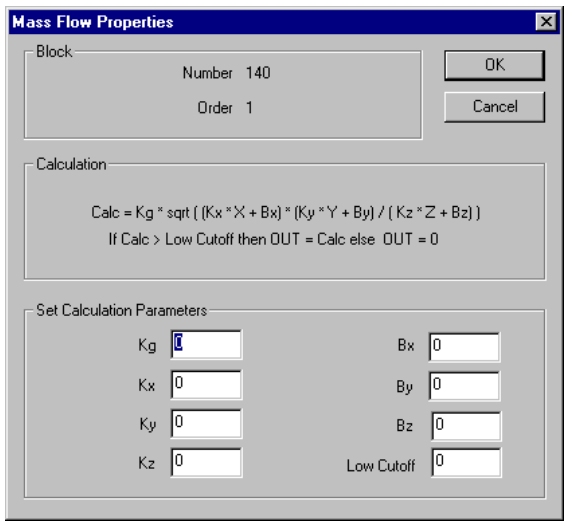

Double click on the function block to access the function block properties dialog box.

Configuration parameters

Table 69 Mass flow function block configuration parameters

Properties Group	Parameter	Index #	Parameter Description	Value or Selection
Set Calculation Parameters	**K_q**	0	Orifice constant	–99999 to 999999
	K_x	1	Delta pressure scaler	–99999 to 999999
	K_y	2	Pressure scaler	–99999 to 999999
	K_z	3	Temperature scaler	–99999 to 999999
	B_y	4	Pressure bias	–99999 to 999999(EU)
	B_x	5	Delta pressure bias	–99999 to 999999(EU)
	B_z	6	Temperature bias	–99999 to 999999(EU)
	Low Cutoff	7	Low Dropoff Value sets the output to zero when the calculation is below this limit.	0 to 99999 in Engineering Units

Example

Figure 59 shows a MSF Function Block Diagram using inputs to calculate a mass flow output.

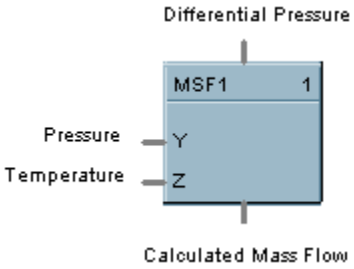

Figure 59 MSF function block example

MUL Multiplier Function Block

Description

The MUL label stands for Multiplication Mathematical operation (2 Inputs).

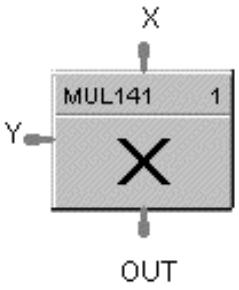

This block is part of the *Math* category..

Function

Multiplies one analog input value (X) by another (Y).

- OUT = X * Y

Input

X = First analog value

Y = Second analog value

Output

OUT = Calculated analog value

Block properties

Double click on the function block to access the function block properties dialog box.

Example

Figure 60 shows a Function Block Diagram using a MUL function block

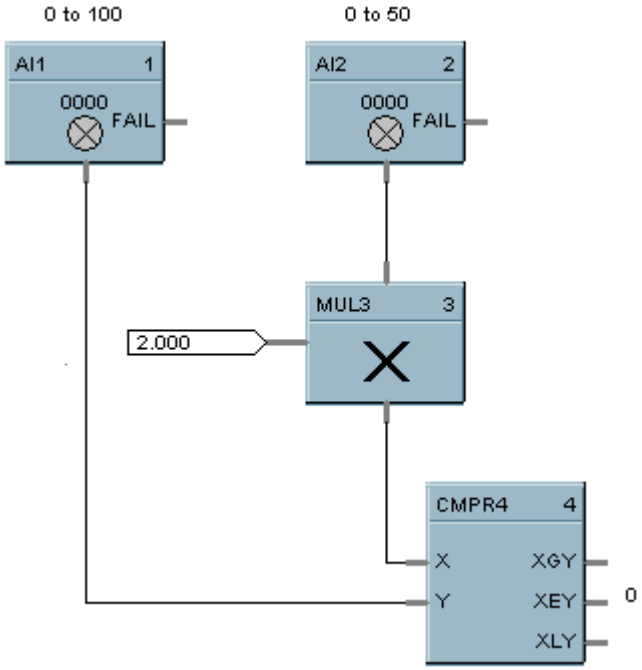

Figure 60 MUL function block example

4MUL Multiplier (4 input) Function Block

Description

The 4MUL label stands for Multiplication Mathematical Operation (4Inputs).

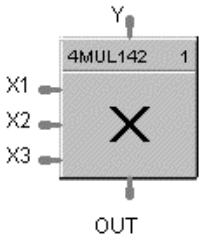

This block is part of the *Math* category.

Function

Multiplies four inputs to get an output.

Input

X1 = First analog value
X2 = Second analog value
X3 = Third Analog value
Y = Fourth Analog value

ATTENTION

All four inputs must be connected. Unconnected inputs default to zero. If only three inputs are needed, the fourth should be connected to a constant value of 1.

Output

OUT = Calculated analog value

Block properties

Double click on the function block to access the function block properties dialog box.

Example

Figure 61 shows correct and incorrect example of a 4MUL function block. Note that all unused inputs must be connected to a constant value of one.

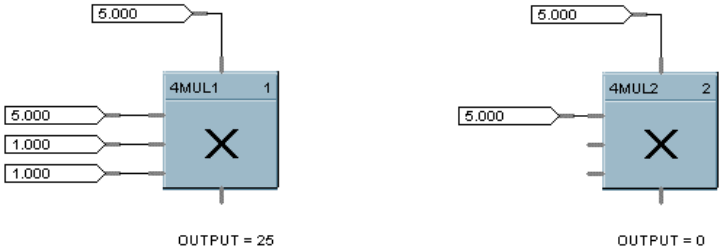

CORRECT **INCORRECT**

Figure 61 4MUL function block example

NEG Negate Function Block

Description

The **NEG** label stands for **Negate**.

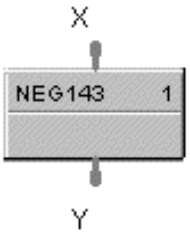

This block is part of the *Calculations* category.

Function

Convert a value to the opposite sign; i.e., +5 IN = –5 OUT, –6 IN = +6 OUT.
(Invert sign of an analog value.)

Input

X = positive or negative analog value

Output

Y = analog value of opposite sign from input

Block properties

Double click on the function block to access the function block properties dialog box.

Example

Figure 62 shows a Function Block Diagram using a NEG function block.

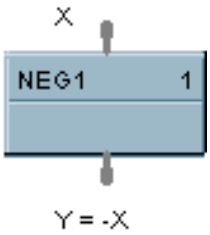

Figure 62 NEG function block example

NOT Function Block

Description

The NOT label stands for the NOT Boolean logic function or Logic Inverter.

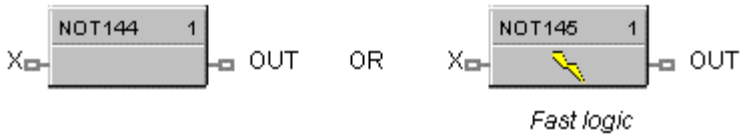

This block is part of the *Logic* and *Fast Logic* categories..

Function

Reverse state of a digital input (X).

- OUT = Opposite state of X
  If X = ON, then: OUT = OFF.
  IF X = OFF, then: OUT = ON.

Input

X = Digital signal

Output

OUT = Complement of input signal

Block properties

Double click on the function block to access the function block properties dialog box.

Example

Figure 63 shows a Function Block Diagram using a NOT function block. Use a single input to place a loop in manual when the input is ON (1) and return to Auto when OFF (0).

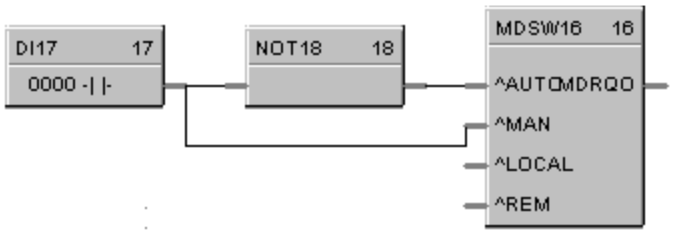

Figure 63 NOT function block example

ONDT On Delay Timer Function Block

Description

The **ONDT** label stands for the **On Delay Timer**.

This block is part of the *Fast Logic and Counters/Timers* categories.

Function

Provides an ON state logic output delayed by a user specified delay time after an OFF to ON transition of the RUN input.

An ON to OFF transition of the RUN input before the delay time has elapsed causes the timer to reset. Transitions from OFF to ON of the input are not delayed.

- If RUN is OFF, then OUT = OFF
- If previous RUN input is OFF and RUN is ON, then TIMER = DELAY, else if timer is not zero, then TIMER = TIMER -1.
- If RUN is ON and TIMER is 0, then OUT = ON (delay time has timed out).

Timing Diagram

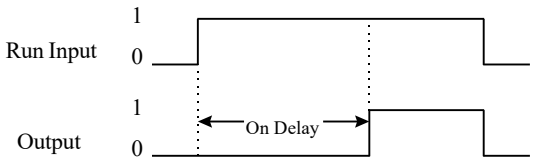

Input

RUN = Logic Input

Output

OUT = Logic Output

Block properties

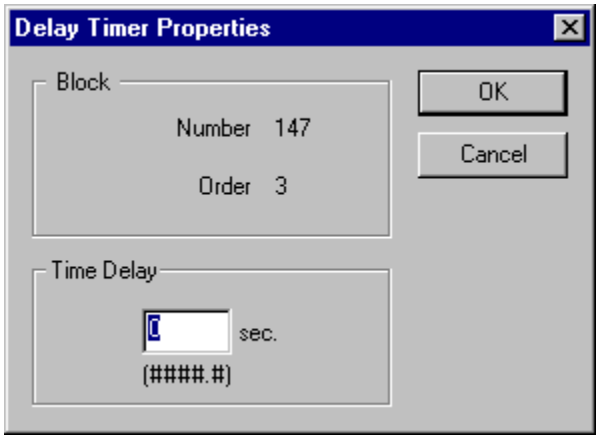

Double click on the function block to access the function block properties dialog box.

Configuration parameters

Table 70 On delay timer function block example

Properties Group	Parameter	Index #	Parameter Description	Value or Selection
Time Delay	**Time delay**	0	Delay Time - specifies the amount of time the ON state logic output will occur after an OFF to ON transition of the RUN input.	0.1 sec, 0 to 99999.9 Enter as 0.1 to 99999 in 0.1 increments

Example

Figure 64 shows a Function Block Diagram using an ONDT function block.

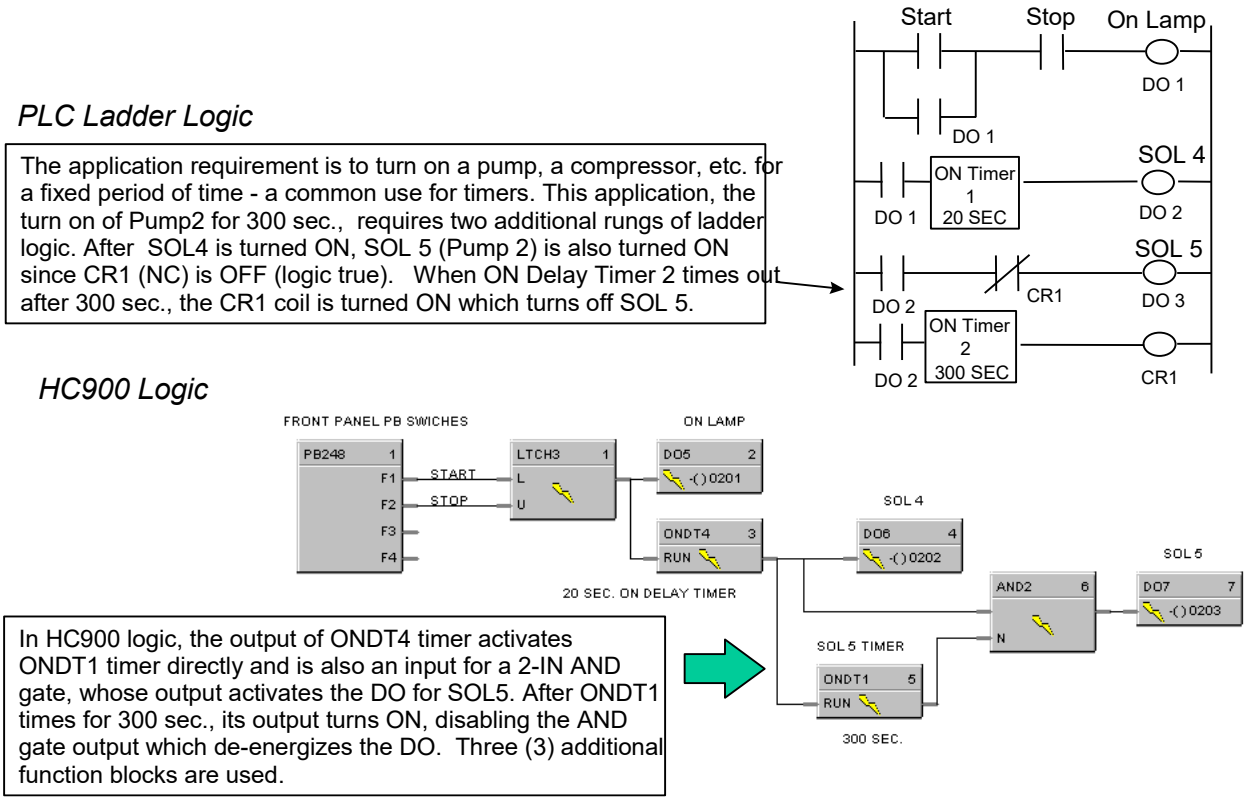

Figure 64 ONDT function block example

OFDT Off Delay Timer Function Block

Description

The **OFDT** label stands for the **Off Delay Timer**.

This block is part of the *Fast Logic and Counters/Timers* categories.

Function

Provides an OFF state logic output delayed by a user specified delay time after an On to OFF transition of the RESET input.

An OFF to ON transition of the RESET input before the delay time has elapsed causes the timer to reset. Transitions from OFF to ON of the input are not delayed.

- IF RESET is ON, then OUT = ON.
- If previous RESET input is ON and RESET is OFF, then TIMER = DELAY.
- If RESET is OFF and TIMER is not 0, then time = TIMER – 1.
- If RESET is OFF and TIMER is 0, then OUT = OFF (delay time is reset).

Timing Diagram

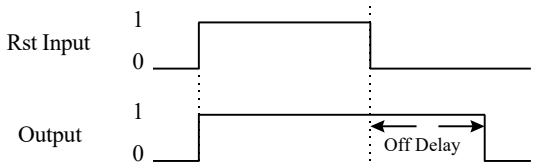

Input

RST = Logic Input

Output

OUT = Logic Output

Block properties

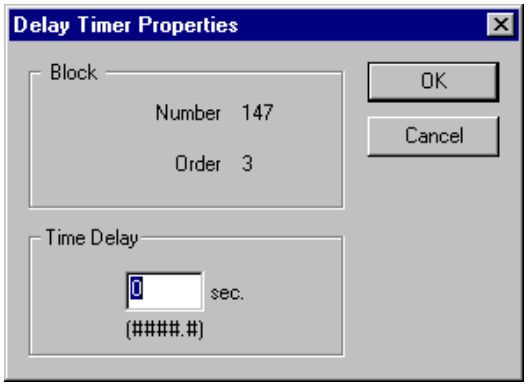

Double click on the function block to access the function block properties dialog box.

Configuration parameters

Table 71 Off delay timer configuration parameters

Properties Group	Parameter	Index #	Parameter Description	Value or Selection
Time Delay	**Time delay**	0	Delay Time - specifies the amount of time the OFF state logic output will occur after an ON to OFF transition of the Reset input.	0.1 sec, 0 to 99999.9 Enter as 0.1 to 99999 in 0.1 increments.

Example

Figure 65 shows a Function Block Diagram using an OFDT function block.

An OFF delay timer block output is ON as long as the RST input is logic HI (ON). It can be used for time duration but must be triggered by an ON to OFF transition on the Reset input. This can be accomplished using Trigger blocks to create one-shot pulses which last one scan cycle. The fast logic trigger pulse will last 100 ms. while the normal logic trigger pulse will last the complete scan cycle for analog blocks. Use according to application need. A Periodic timer output pulse may also be used to start the timer for the OFF delay.

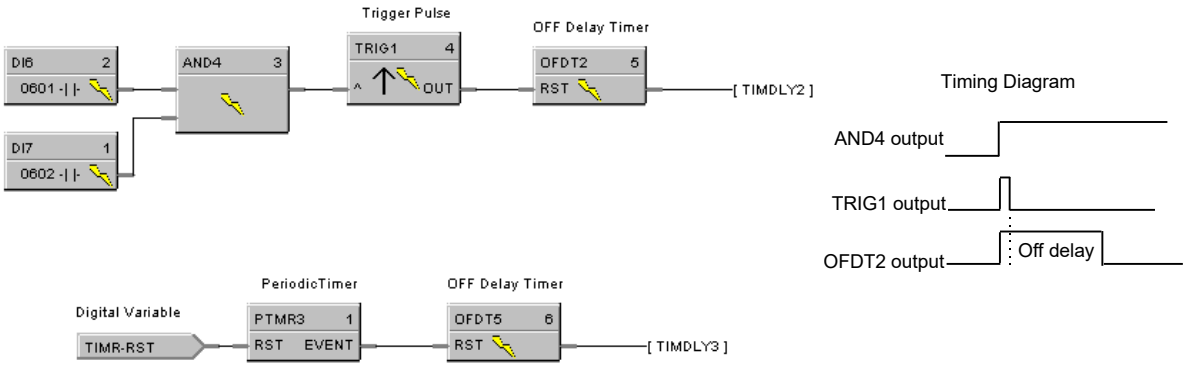

Figure 65 OFDT function block example

ON/OFF Function Block

Description

The ON/OFF label stands for the On/Off Control function.

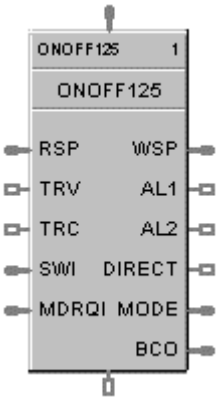

This block is part of the *Loops* category.

Function

Provide ON/OFF control. The output is either ON (100 %) or OFF (0 %).

Inputs

RSP = Remote Setpoint (% or EU per SP Units)

TRV = Track Value Output—1 = ON, 0 = OFF

TRC = Track Value Command—1 = enable, 0 = disable (Mode = Local Override)

SWI = Switch Inputs (from LPSW function block)

MDRQI= External Mode Request (connected to the MDRQO output of a MDSW function block) encoded as follows:

0.0 = No Change
1.0 = Manual Mode Request
2.0 = Automatic Mode Request
4.0 = Local Setpoint Request
8.0 = Remote Setpoint Request

Outputs

WSP = Working Setpoint in Engineering Units for monitoring

AL1 = Alarm 1

AL2 = Alarm 2

DIRECT = ON = Direct; OFF = Reverse

MODE = Actual Mode encoded as follows: (Connect to Mode Flags block [MDFL] to encode mode status.)

0.0	RSP AUTO
1.0	RSP MAN
2.0	RSP Initialization Manual (See ATTENTION)
3.0	RSP Local Override (See ATTENTION)
4.0	LSP AUTO
5.0	LSP MAN
6.0	LSP Initialization Manual (See ATTENTION)
7.0	LSP Local Override (See ATTENTION)

BCO = Back Calculation Output (for blocks used as Cascade Secondary

ATTENTION

When a request to change from Auto to manual is received and:

- the request comes from the operator Interface, the request is ignored.
- the request comes from the Mode Switch (MDSW) function block, the request is retained and when leaving the Initialization Mode or Local Override Mode the loop will go to manual.

Block properties

Double click on the function block to access the function block properties dialog box.

Configuration parameters

The ON/OFF properties dialog box is divided into 5 tab cards:

GENERAL
START/RESTART
RSP
RANGE/LIMIT
ALARMS

Click on the tab to access the properties for that tab.

GENERAL tab

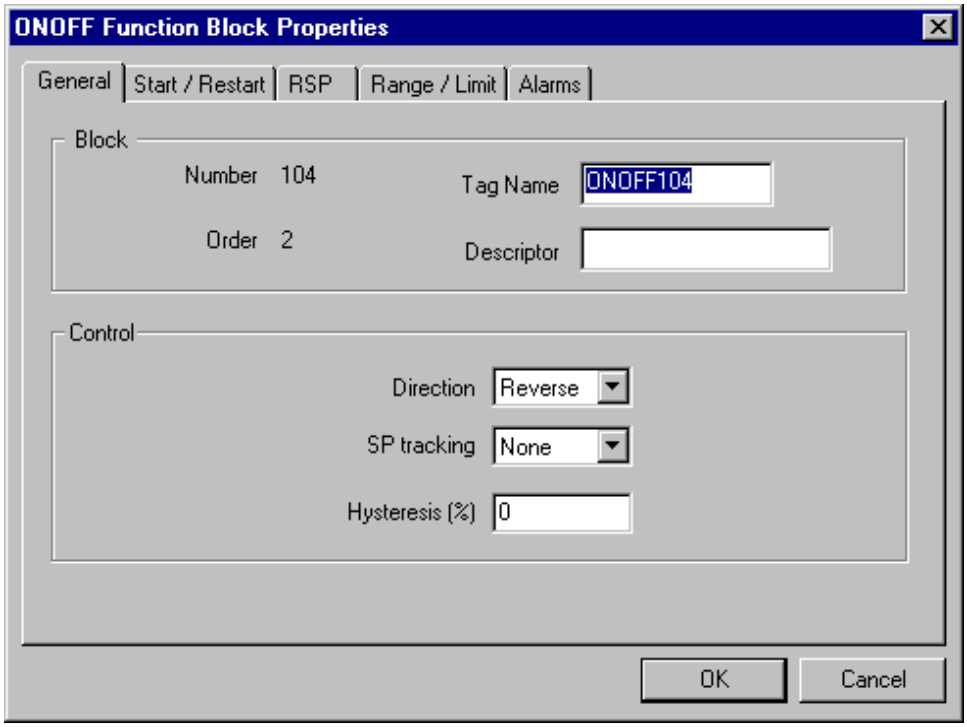

Table 72 ON/OFF General tab configuration parameters

Properties Function	Parameter	Index #	Parameter Description	Value or Selection
Block	**Order**	N/A	Execution Order	Read Only. To change block order, right-click on a Function Block and select Execution Order.
	Tag Name	N/A	32-characters unique tag name (ASCII characters only)	Up to 32-characters
	Descriptor	N/A	Block description	Up to 32-characters
Control	**Direction**	N/A	Control Action	**REVERSE** - Proportional action causes output to decrease as process variable increases. **DIRECT** - Proportional action causes output to increase as process variable increases.
	SP Tracking	N/A	Setpoint Tracking	**NONE** **TRACK PV** - When control mode is “manual”, local setpoint tracks process variable. **TRACK RSP** - When setpoint is remote setpoint, local setpoint tracks remote setpoint.
	Hysteresis	19	Output Hysteresis	0 % to 10 % of input span

START/RESTART tab

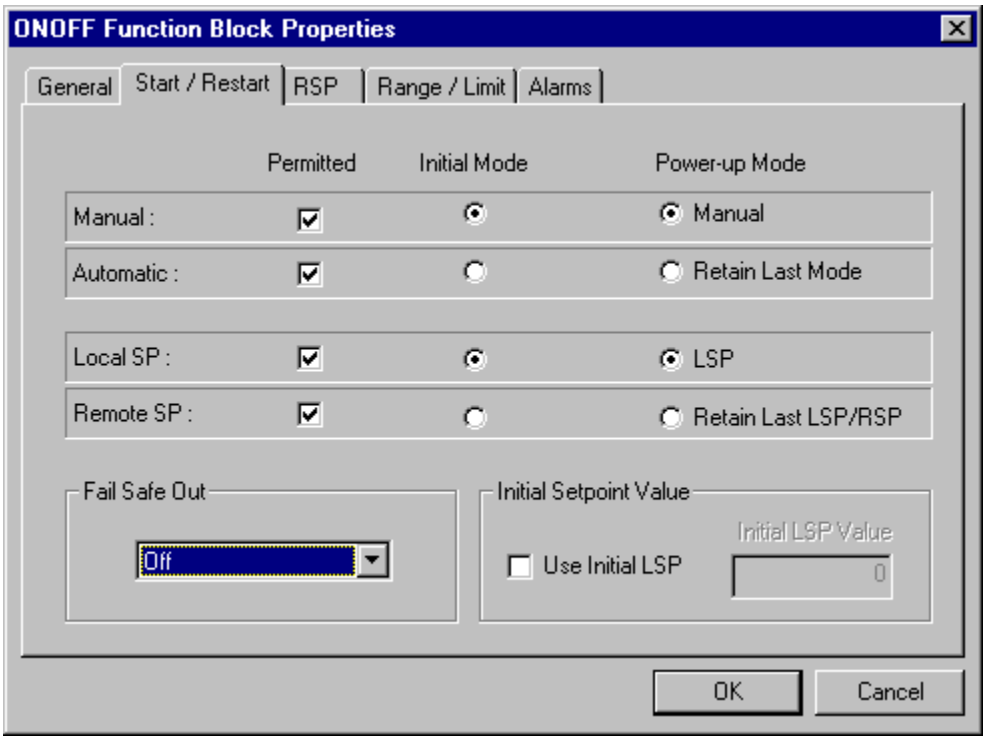

Table 73 ON/OFF Start/Restart tab configuration parameter

Modes and Setpoints	**Permitted Mode**	MAN 4 AUTO 5	Mode permitted for the initial start and power up mode.	**Manual** **Automatic** ***May select both, must select one.***
	Permitted Setpoint	LSP 6 RSP 7	Setpoint permitted for the initial start and power up mode.	**Local Setpoint** **Remote Setpoint** ***May select both, must select one.***
	Initial Mode	N/A	Mode at NEWSTART **Newstart** is the first scan cycle following the cold start of the controller	**Manual** **Automatic** *Select one*
	Setpoint for Initial Mode	N/A	Setpoint at NEWSTART **Newstart** is the first scan cycle following the cold start of the controller	**Local Setpoint** **Remote Setpoint** *Select one*
	Power up Mode	N/A	Mode at power up	**Manual** **Retain Last Mode** Same mode (auto or manual) *Select one*
	Power up Setpoint	N/A	Setpoint at power up	**Local Setpoint** **Retain Last LSP/RSP** Same Setpoint (LSP or RSP) ***Select one***
Power Up Out	**Power Up Out**	N/A	Output at Power up	**LAST OUT** - Same as at power down. **FAILSAFE** - Failsafe output value.
	Failsafe Out	29	Failsafe Output Value	–5 % to 105 %
Initial Setpoint Value	**Use initial LSP**	30	Use Initial Local Setpoint	Click on radio button to select.
	Initial LSP Value	31	Initial Local Setpoint Value	Enter Initial Local Setpoint Value.

RSP tab

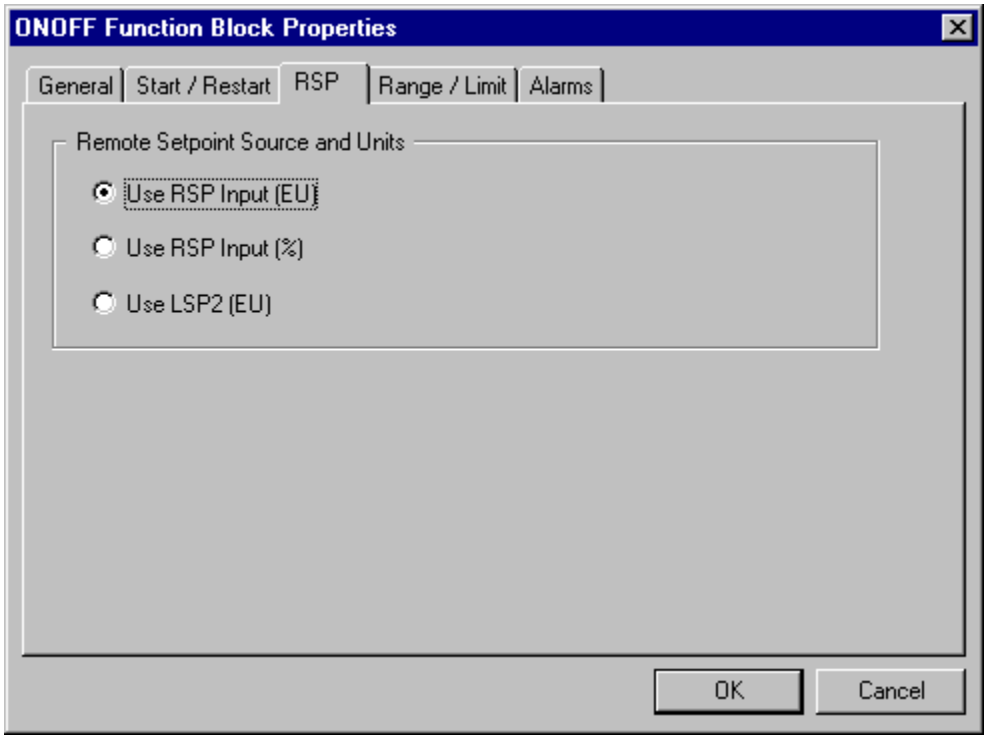

Table 74 ON/OFF RSP tab configuration parameters

Properties Function	Parameter	Index #	Parameter Description	Value or Selection
Remote Setpoint Source and Units	**Use RSP Input (EU)**	N/A	Use Remote Setpoint in Engineering Units	Click on radio button to select
	Use RSP Input (%)		Use Remote Setpoint in Percent	Click on radio button to select
	Use LSP2 (EU)		Use Local Setpoint #2 in Engineering Units	Click on radio button to select

RANGE/LIMIT tab

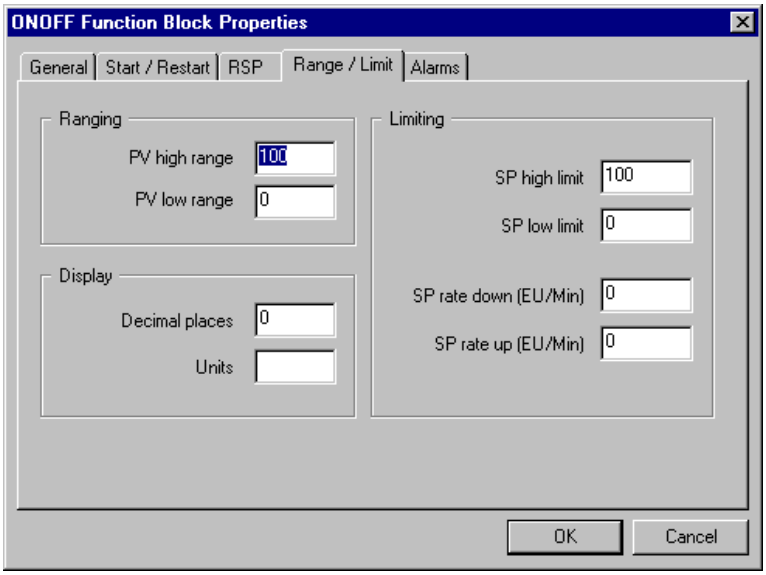

Table 75 ON/OFF Range/limit tab configuration parameters

Properties Function	Parameter	Index #	Parameter Description	Value or Selection
Ranging	**PV High range**	0	PV High Range Value	–99999 to 99999
	PV Low Range	1	PV Low Range Value	–99999 to 99999
Display	**Decimal Places**	N/A	Number of digits to display after decimal point.	0 to 5
	Units	N/A	Text to display for EU	6 characters
	DEV Bar Range (EU)	N/A	Deviation Bar Range on the Operator Interface	–99999 to 99999
Limiting	**SP High Limit**	12	Setpoint High Limit Value - prevents the local and remote setpoints from going above the value set here.	–99999 to 99999
	SP Low limit	13	Setpoint Low Limit Value - prevents the local and remote setpoints from going below the value set here.	–99999 to 99999
	SP Rate Down	15	Setpoint Rate Down value - when making a setpoint change, this is the rate at which setpoint will change from the original setpoint **down** to the new one.	0 (off) to 99999 (eu/min)
	SP Rate Up	16	Setpoint Rate Up value - when making a setpoint change, this is the rate at which setpoint will change from the original setpoint **up** to the new one.	0 (off) to 99999 (eu/min)

ALARMS tab

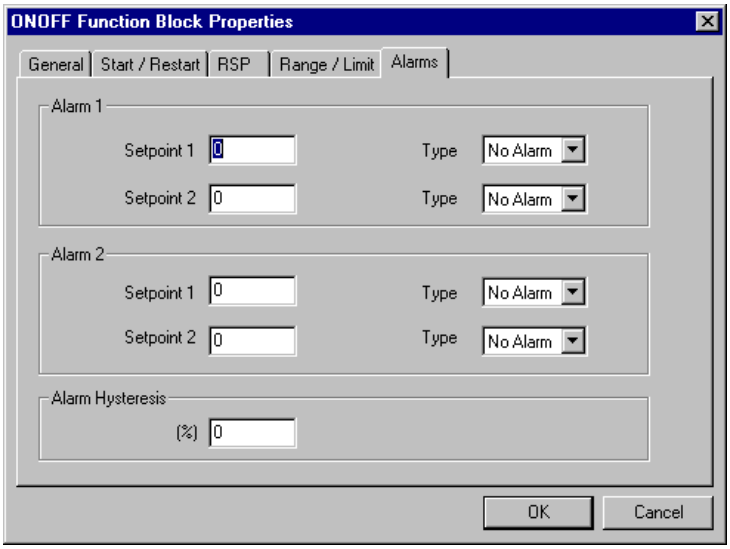

Table 76 ON/OFF Alarm tab configuration parameters

Properties Function	Parameter	Index #	Parameter Description	Value or Selection
Alarm 1	**Setpoint 1**	20	**Alarm 1 Setpoint 1 Value** - this is the value at which you want the alarm type chose below to activate	–99999 to 99999 in Engineering Units
	Type	N/A	Alarm 1 Setpoint 1 Type - select what you want Alarm 1 Setpoint 1 to represent.	Selections: NO ALARM PV_HIGH PV_LOW DEV_HIGH DEV_LOW SP_HIGH SP_LOW OUT_HIGH OUT_LOW
	Setpoint 2	21	Alarm 1 Setpoint 2 Value	Same as **Alarm 1 Setpoint 1**
	Type	N/A	Alarm 1 Setpoint 2 Type	Same as **Alarm 1 Setpoint 1**
Alarm 2	**Setpoint 1**	22	Alarm 2 Setpoint 1 Value	Same as **Alarm 1 Setpoint 1**
	Type	N/A	Alarm 2 Setpoint 1 Type	Same as **Alarm 1 Setpoint 1**
	Setpoint 2	23	Alarm 2 Setpoint 2 Value	Same as **Alarm 1 Setpoint 1**
	Type	N/A	Alarm 2 Setpoint 2 Type	Same as **Alarm 1 Setpoint 1**
Alarm Hysteresis	**%**	28	Alarm Hysteresis in %	0 % to 5 %

Example

Figure 66 shows a Function Block Diagram using an ON/OFF function block.

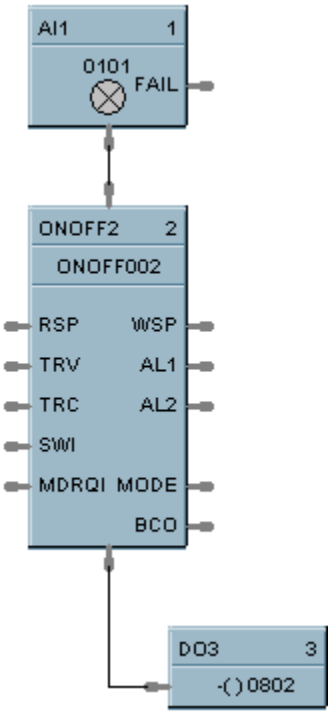

Figure 66 ON/OFF function block example

2OR Function Block

Description

The 2OR label stands for the inclusive OR (2 Inputs) Boolean logic function.

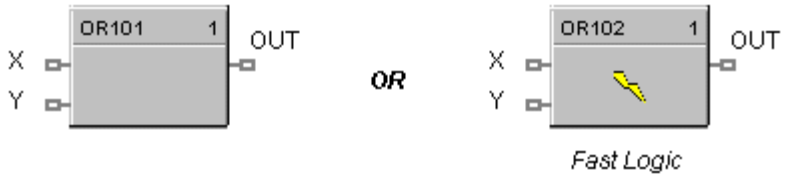

This block is part of the *Logic* and *Fast Logic* categories.

Function

Monitors two digital input signals (X, Y) to set state of digital output signal (OUT).

- If X = OFF and Y = OFF, then **OUT = OFF.**
- If X = ON and/**or** Y = ON, then: **OUT = ON.**

Input

X = First digital signal.

Y= Second digital signal.

Output

OUT = Digital signal controlled by status of input signals

Block properties

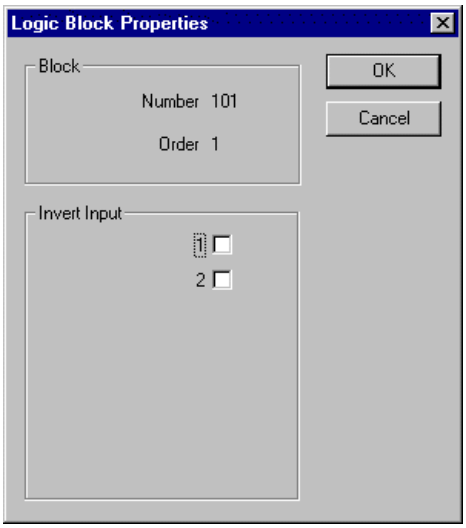

Double click on the function block to access the function block properties dialog box.

Input state

You can invert Input 1 or input 2 or both. If the input is inverted, an input line that is ON is seen as OFF. (“N” appears on Icon next to the inverted input.)

Example

Figure 67 shows a Function Block Diagram using a 2OR function block.

This is a basic series-parallel circuit. If Limit Switch 1 (LS1) is ON and Limit Switch 2 (LS2) is ON, or if pushbutton PB1 is ON, then Solenoid 1 is turned ON, otherwise it is OFF. Note “power flow” can be delivered in either of two paths to the solenoid.

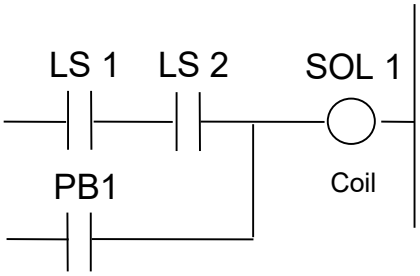

Equivalent Boolean Logic Expression

A = LS1, B = LS2

C = PB1, D = Output

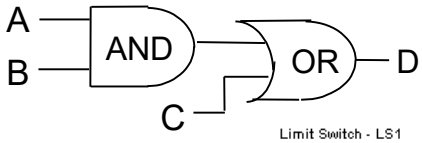

AND Symbol

OR Symbol

(A * B) + C = D

HC900 Logic

This uses a basic 2 Input AND block and a 2 Input OR block.

6 Function blocks are used.

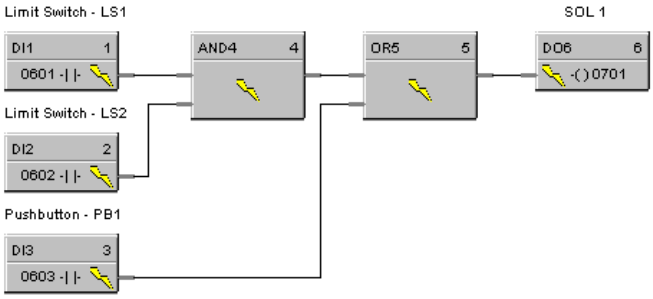

Figure 67 2OR function block example

4OR Function Block

Description

The 4OR label stands for the inclusive OR (4 Inputs) Boolean logic function.

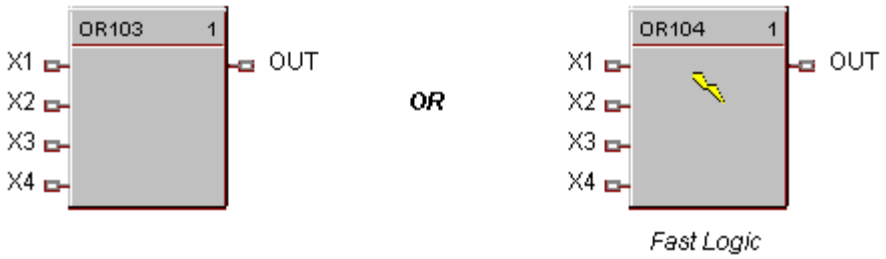

This block is part of the *Logic* and *Fast Logic* categories.

Function

Turns digital output (OUT) **OFF** when inputs X1 through X4 are **OFF**. Thus,

- If input X1 **or** X2 **or** X3 **or** X4 is **ON**, then: **OUT = ON**.
- If all inputs are OFF, then: **OUT = OFF**.

Input

X1 = First digital signal
X2 = Second digital signal
X3 = Third digital signal
X4 = Fourth digital signal

Output

OUT = Digital signal controlled by status of input signals

Block properties

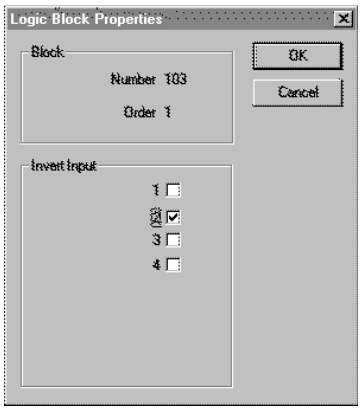

Double click on the function block to access the function block properties dialog box.

Input state

You can invert Input 1, 2, 3, 4, or all. If the input is inverted, an input line that is ON is seen as OFF. (“N” appears on the Icon next to the inverted input.)

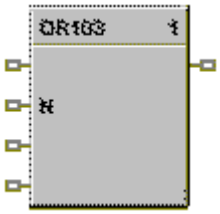

ATTENTION

Unused Inputs default to 0.

Example

Figure 68 shows a Function Block Diagram using a 4OR function block.

Output = X1 or X2 or X3 or $\overline{X4}$

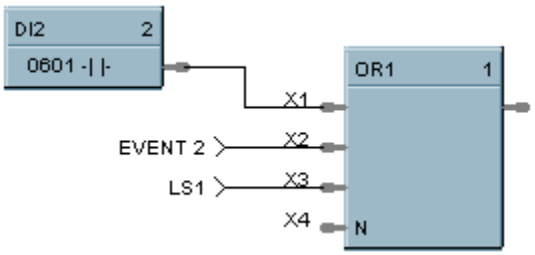

Figure 68 4OR function block example

8OR Function Block

Description

The 8OR label stands for the inclusive OR (8 Inputs) Boolean logic function.

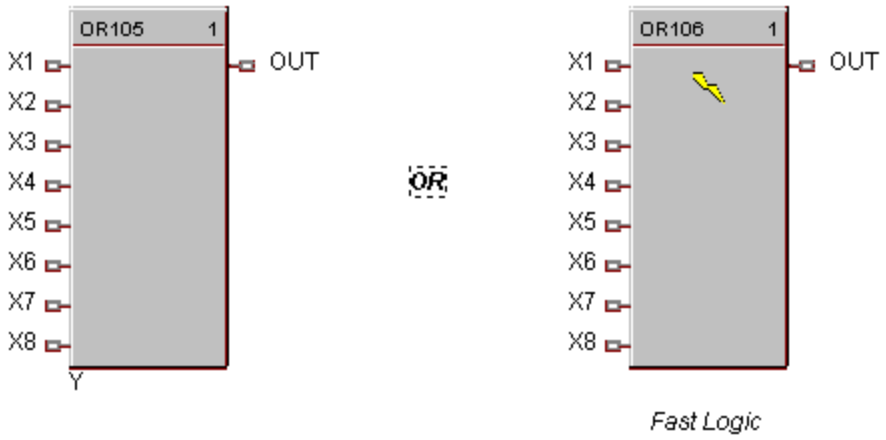

This block is part of the *Logic* and *Fast Logic* categories.

Function

Turns digital output (OUT) OFF when inputs X1 through X8 are off, thus:

- If input X1 **or** X2 **or** X3 **or** X4 **or** X5 **or** X6 **or** X7 **or** X8 is **ON**, then: **OUT = ON.**
- If all inputs are OFF, then: **OUT = OFF.**

Input

X1 = First digital signal
X2 = Second digital signal
X3 = Third digital signal
X4 = Fourth digital signal
X5 = Fifth digital signal
X6 = Sixth digital signal
X7 = Seventh digital signal
X8 = Eight digital signal.

Output

OUT = Digital signal controlled by status of input signals

Block properties

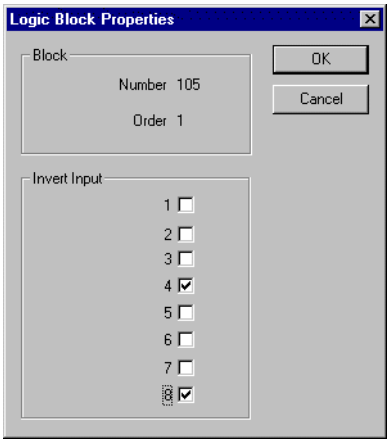

Double click on the function block to access the function block properties dialog box.

Input state

You can invert Input 1, 2, 3, 4, 5, 6, 7, 8 or all. If the input is inverted, an input line that is ON is seen as OFF. (“N” appears on the ICON next to the inverted input.)

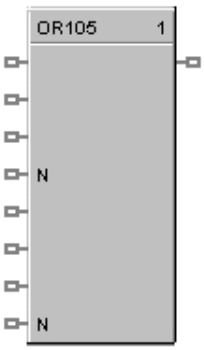

CAUTION

Unused Inputs default to 0.

Example

Figure 69 shows a Function Block Diagram using an 8OR function block.

Output = X1 **or** X2 **or** X3 **or** $\overline{X4}$ **or** X5 **or** $\overline{X6}$ **or** $\overline{X7}$ **or** $\overline{X8}$

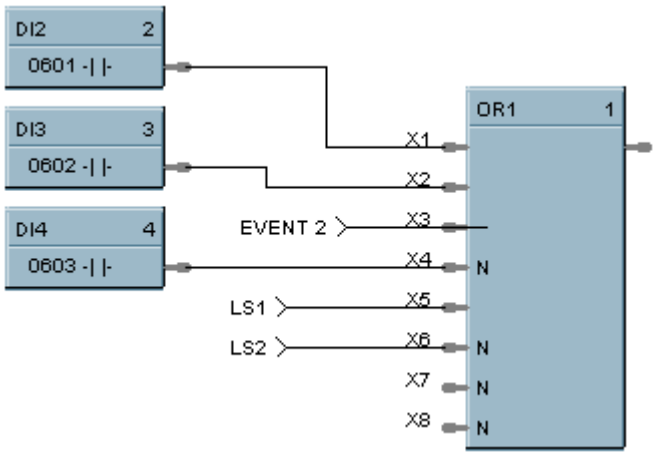

Figure 69 8OR function block example

PB Pushbutton Function Block

Description

The **PB** label stands for the inclusive **Pushbutton**.

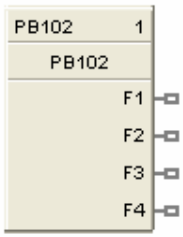

This block is part of the *Logic* category.

Function

Provides the interface from the operator panel to the logic functions of the controller. Provides a one-shot logic ON in response to pressing the corresponding function key on the operator interface.

This selection lets you **configure** the Pushbutton function display that will provide the interface to the four logic operator keypad keys (F1 through F4). You can do this for up to four Pushbutton blocks giving you 4 groups (total 16 pushbuttons) that can be set up for selection on your display buttons (1-8).

When you select a pushbutton group on a display button (1-8), the operator interface will display the pushbutton function group screen and buttons F1-F4 on the operator interface will display the information that has been set up for that group.

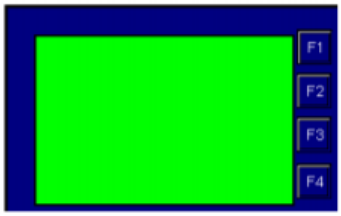

Output

F1 = Provide 1 shot logic ON in response to pressing Pushbutton F1
F2 = Provide 1 shot logic ON in response to pressing Pushbutton F2
F3 = Provide 1 shot logic ON in response to pressing Pushbutton F3
F4 = Provide 1 shot logic ON in response to pressing Pushbutton F4

Configuration

Double click on the function block to access the “Pushbutton Display Configuration” dialog box.

Configuration procedure

Follow the procedure in Table 77 to configure the Pushbutton Function Groups.

Table 77 Pushbutton function group configuration

• There are four pushbuttons that can be configured for each block. You can assign just a label for the display using the Output descriptor. You can also select signal tags from the “Signal Tag List” if you require a feedback signal to be shown on the pushbutton display.	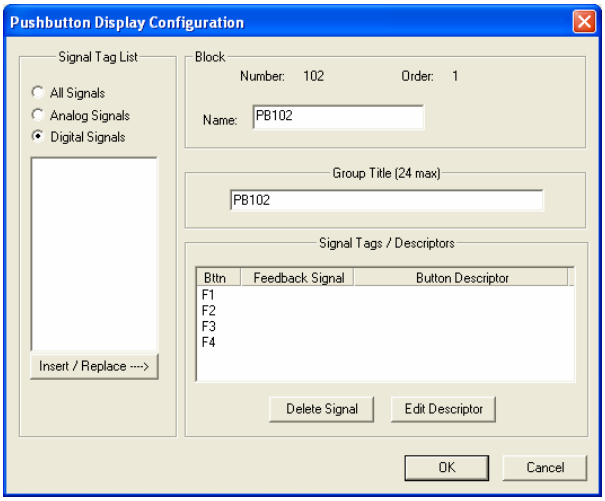
• Enter the Tag Name Text in the appropriate field.	
• Enter the Group Title Text in the appropriate field.	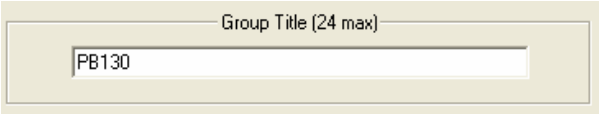
The “Signal Tag List” field shows all the Signal Tags that have been configured on the Function Block Diagram. Select “All Signals”, ”Analog Signals”, or “Digital Signals”. • **To Add a Digital Signal tag to a Pushbutton location:** Click on a signal tag in the list, then click on “Insert/Replace”. The selected Signal tag will be placed in the next available position in the “Signal Tags/Descriptors” field. • **To Insert a Digital Signal tag to a Pushbutton location:** Select a position in the “Signal Tags/Descriptors” field., then click on INSERT. (You must click in the *first* column of the Selected Signal Tag list to select a row.) The selected Signal tag will be placed in the position chosen, and other signal tags will move down as required. You may only insert to the occupied portion of the list. An attempt to insert to any empty row will place the new item in the first empty row.	

The selected Signal Tag will be placed in the “Signal Tags/Descriptors” field • **Repeat** selection for up to 4 Pushbuttons. • To **delete** a selected Tag, click on the position of the tag and click “Delete”.	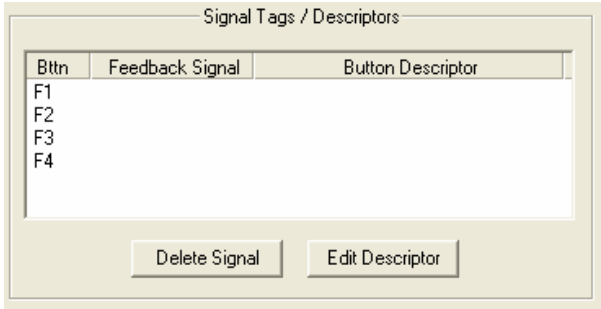
• To Add or Edit and output descriptor to the display, click on the “Bttn” number and then on “Edit Descriptor” and type in the descriptor in the Edit field. • Click “**OK**”. ***You can assign Pushbutton Configuration Groups to Display Buttons, refer to Display Buttons (1-8) Configuration in the Process Control Designer User's Guide.***	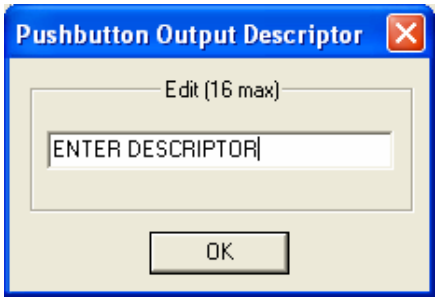

Example

Figure 70 is an overview of a pushbutton configuration.

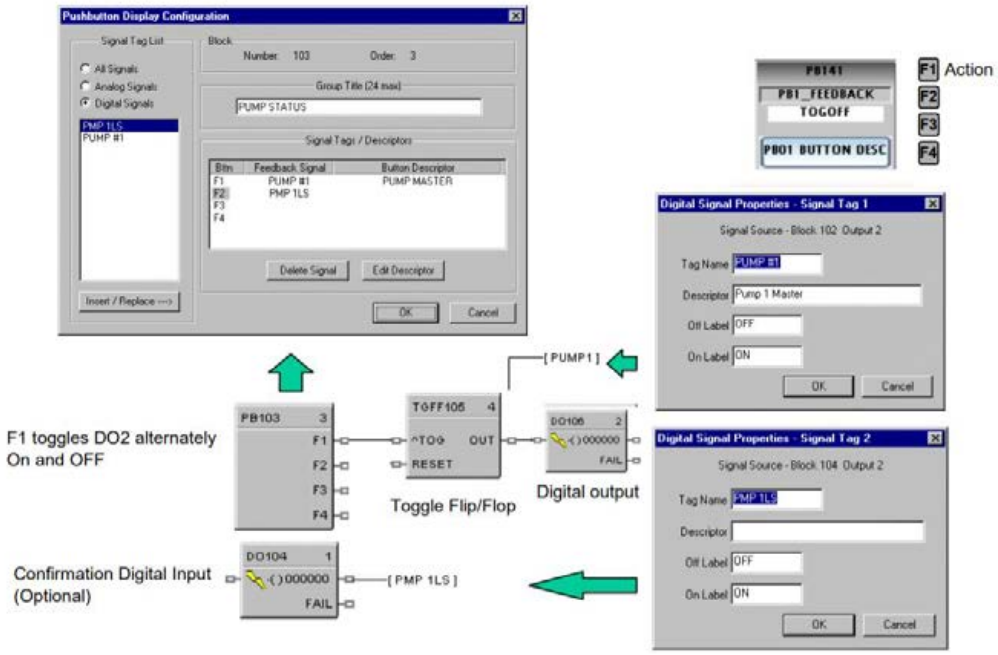

Figure 70 PB function block example

PDE Peer Data Exchange Function Block

Description

The PDE label stands for Peer Data Exchange.

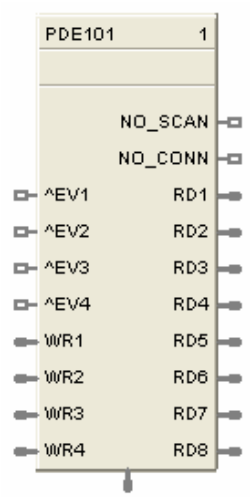

This block is part of the *Communications* categories.

ATTENTION

1. Network Name must match on all PDE controllers via **Utilities** tab → **Network Name**.
2. Controller Name must match PDE Block name in other HC900.
3. Change Controller Name via **Controller** tab → **Controller Identification ic.**
4. C75/ C75S will use E1 or E2 ports as available.

Function

A communications function block that allows interconnecting controllers with Ethernet media and networking devices communicate with each other.

It requires one block per controller; up to 32 controllers maximum. It supports up to 8 Read and 4 Write parameters. By connecting PDR and PWD blocks, a PDE communication block can support up to 70 peer exchanges with each peer controller, however there is a limit of 44 Writes supported.

The block does not support forcing, but will allow data writes to any of its inputs.

Inputs

EV1 through EV4 - [ON] - data value written per scan

WR1 through WR4 - Values to be written to the selected controller

Attention: The block does not support bit packing and single bit writing.
If the register is an integer type, the floating point input will be rounded up prior to the address register.

Outputs

RD1 through RD8 - last read value from the selected controller.

NO SCAN - ON = device is not receiving updates from peer
OFF = device is receiving updates from peer

NO CONN - ON = cannot connect to peer device
OFF = Good connection, Peer found.

Note: Use the NOSCAN and NOCONN flags to detect the loss of peer communication data when used for critical control applications.

Block Properties

Double click on the function block to access the function block properties.

Block properties

Double click on the function block to access the function block properties dialog box.

Dialog box structure

The PDE properties dialog box is divided into 3 tab cards

GENERAL
READ
WRITE

Click on the tab to access the properties for that tab.

GENERAL tab

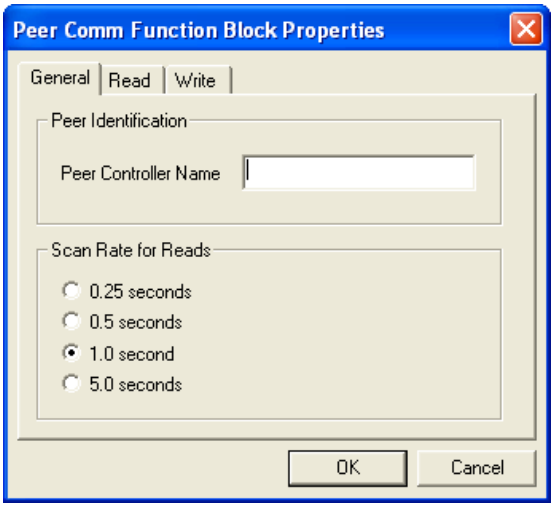

Table 78 PDE General tab configuration parameters

Parameter	Index #	Parameter Description	Value or Selection
Peer Controller Name	N/A	Name of the Peer controller for this block	Enter the peer controller name in the active field. 12 characters max.
Scan Rate for Reads	N/A	Set to equal to or greater than 2X the analog cycle scan rate of the peer device. Scan rate selection for reads: 0.25 seconds 0.5 seconds 1.0 seconds 5.0 seconds	Click on radio button to select

READ tab

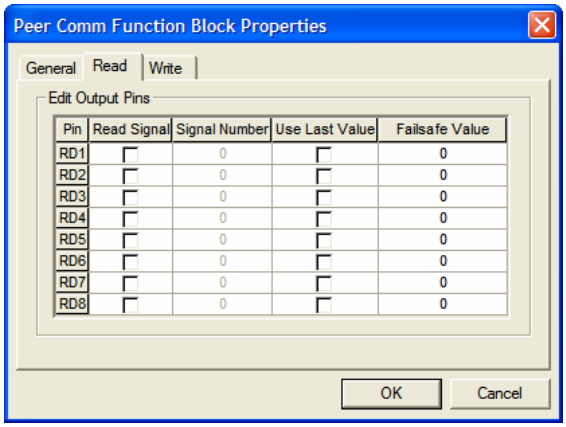

Table 79 PDE Read tab configuration parameters

Parameter	Index #	Parameter Description	Value or Selection
Read Signal	N/A	Activates the RD1 through RD8 pins for reads.	Click on selection box for the pin number.
Signal Number	N/A	Signal Tag number that appears on the Tag Information Report. See "Tag Information Example".	Enter a tag number from the report. **You can also use the "Find a Signal tag" procedure to find the Signal Tag number**.
Use Last Value	N/A	Use the last known value for when the associated data connection is invalid.	Click on selection box for the pin number.

Parameter	Index #	Parameter Description	Value or Selection
Failsafe Value	41 through 48	Failsafe value for when the associated data connection is invalid.	Enter a failsafe value.

WRITE tab

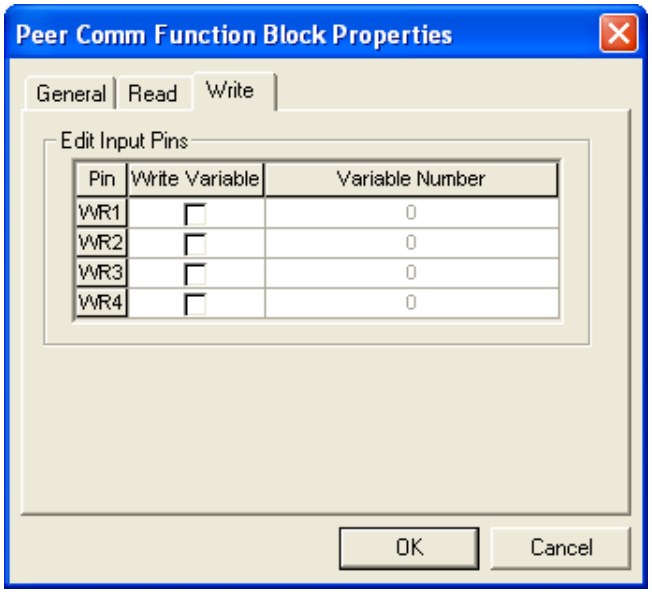

Table 80 PDE Write tab configuration parameters

Parameter	Index #	Parameter Description	Value or Selection
Write Variable	N/A	Activates the WR1 through WR4 pins for writes.	Click on selection box next to the pin number.
Variable Number	N/A	Variable number that appears on the Tag Information Report. See "Tag Information Example".	Enter a variable number from the report. **You can also use the "Find a Signal tag" procedure to find the variable number**.

Example

The problem that is being addressed is to control a PID in Unit 2 from a recipe and OI located on unit 1.

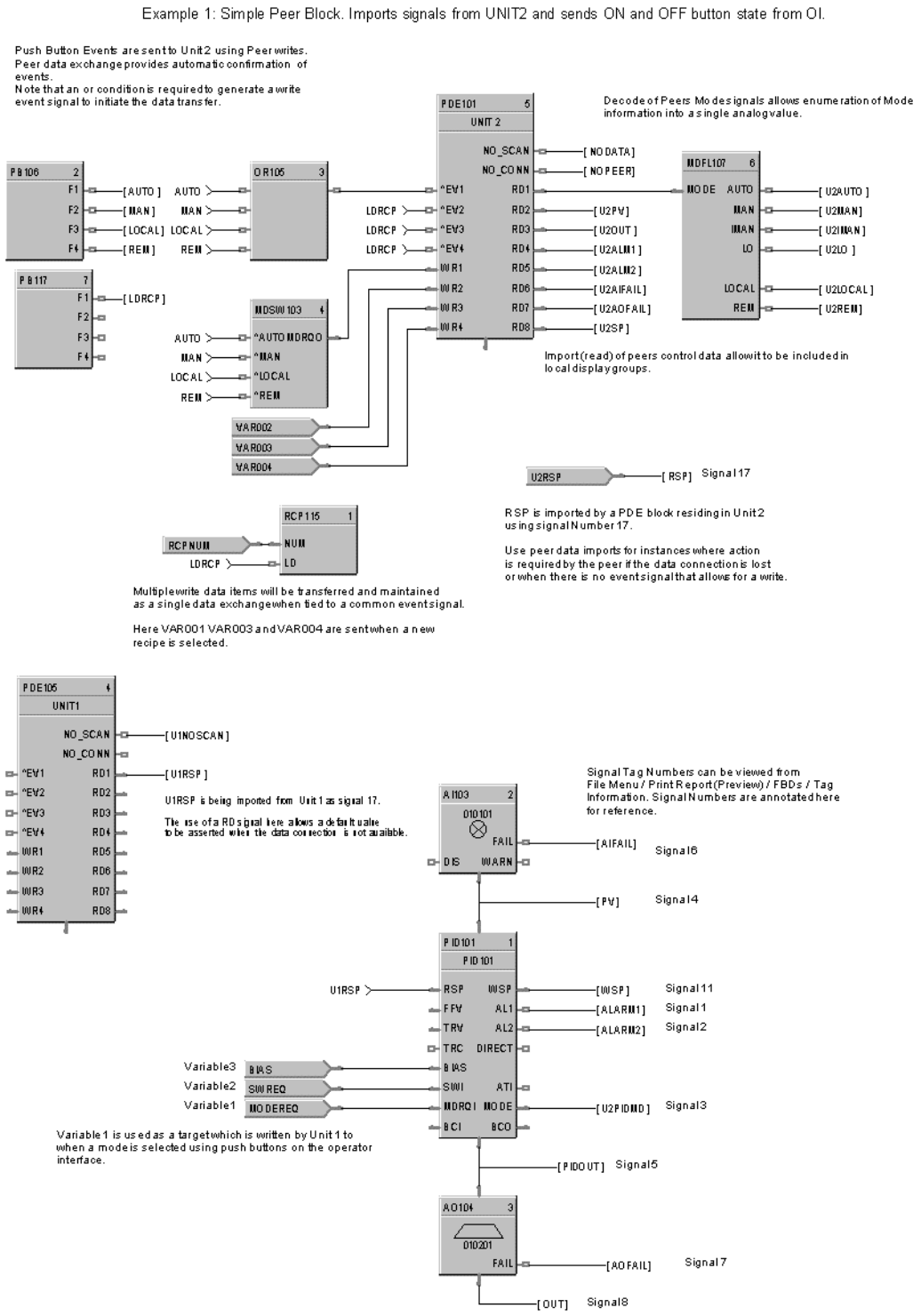

Figure 71 PDE Function Block Example

PDR Peer Data Read Function Block

Description

The PDR label stands for Peer Data Read.

This block is part of the *Communications* categories..

Function

A Peer Data Exchange block that expands the Read capability of the PDE function block to 16 additional points.

Multiple blocks may be connected to the same PDE function block.

The PDR Read block has 16 outputs. The Peer Data Exchange destination for each of the 16 input can be configured.

Inputs

RD1 through RD16 - Values to be written to the selected peer controller

Outputs

None

Block Properties

Double click on the function block to access the function block properties.

Configuration Parameters

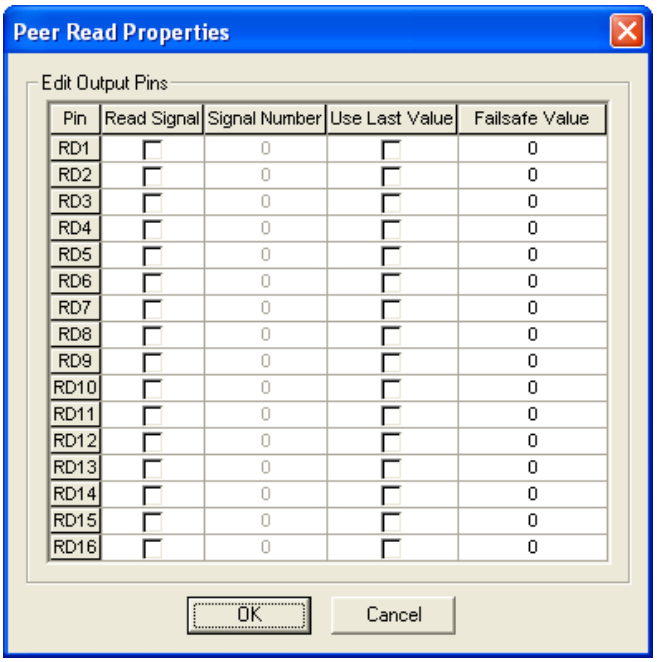

Edit Output Pins

Parameter	Index #	Parameter Description	Value or Selection
Read Signal	N/A	Activates the RD1 through RD16 pins for reads.	Click on selection box next to the pin number.
Signal Number	N/A	Signal Tag number that appears on the Tag Information Report. See "Tag Information Example".	Enter a tag number from the report. **You can also use the "Find a Signal tag" procedure to find the Signal Tag number**.
Use Last Value	N/A	Use the last known value for when the associated data connection is invalid.	Click on selection box for the pin number.
Failsafe Value	N/A	Failsafe value for when the associated data connection is invalid.	Enter a failsafe value.

PDW Peer Data Write Function Block

Description

The PDW label stands for Peer Data Write.

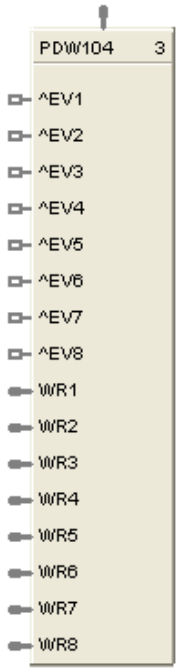

This block is part of the *Communications* categories.

Function

A Peer Data Exchange block that expands the Write capability of the PDE function block to 8 additional points.

Multiple blocks may be connected to the same PDE function block, however there is a limit of 44 Writes supported..

The PDW Write block has 8 outputs. The Peer Data Exchange destination for each of the 8 input can be configured.

Inputs

^EV1 through EV8 - Event Inputs to trigger write on rising edge.

WR1 through WR8 - Values to be written to the selected peer controller

Outputs

None

Block Properties

Double click on the function block to access the function block properties.

Configuration Parameters

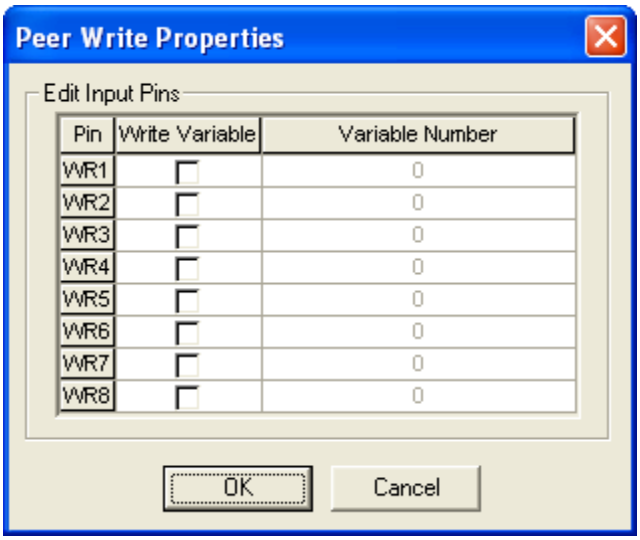

Edit Input Pins

Parameter	Index #	Parameter Description	Value or Selection
Write Variable	N/A	Activates the WR1 through WR8 pins for writes.	Click on selection box next to the pin number.
Variable Number	N/A	Variable number that appears on the Tag Information Report. See "Tag Information Example".	Enter a variable number from the report. **You can also use the "Find a Signal tag" procedure to find the variable number**.

PI Pulse Input

Description

The PI label stands for Pulse Input.

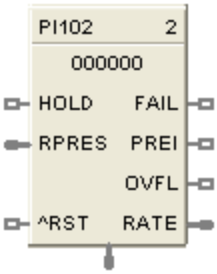

Function

This function block reads pulses from a single input channel on a Pulse/Frequency/Quadrature input module. It measures quantity by scaling the number of pulses to engineering units (EU). It measures rate in engineering units by dividing number of pulses by time. The preset values, reset, preset action, and hold flags are sent to the module and the module responds with accumulated pulse counts, preset indicator (PREI) (when preset value is reached), counter overflow indicator (OVFL), and FAIL. The block converts the accumulated pulse count to EU

Inputs

HOLD = A Boolean value when set to ON holds the EU count (OUT) at its current value.

RPRES = Remote preset value (in EU). When OUT reaches this value (or the local preset value) PREI turns ON.

^RST = An OFF to ON transition resets the module's pulse counter and the block's OUT to zero. It also clears the FAIL, PREI and OVFL flags.

Outputs

FAIL = Failed Input Indication. A Boolean value that turns ON when the Pulse/Frequency/Quadrature Input module reports a failure. This is cleared by the ^RST input.

PREI = Preset indicator. OFF [0] when OUT = less than the local or remote preset value, ON when the count (OUT) reaches the local or remote preset value. The hardware module determines the state of the PREI output. Note: due to the delay in messaging and the responsive time of the module, there can be a lag between the PREI output of the function block versus the DO on the module. This lag can be as much as 1 scan cycle. PREI is cleared by the ^RST input. A preset value of 0 effectively turns off the Preset allowing the counter to count continuously until held or reset.

OVFL = Overflow flag. This turns ON when the counter on the module is full. This is cleared by the ^RST input.

RATE = Rate in EU/Time Period. Input pulses are counted over a specified Sample Time and scaled to EU/Second, EU/Minute or EU/Hour.

OUT = The accumulated Engineering Unit (EU) count. The forcing of OUT is permitted within this block.

Hints

If it is necessary to turn off a device when the pulse counter is placed in HOLD, it is recommended that you also tie the source of the input HOLD signal to a DO block. The DO block would then control the On/off State of the device.

Configuration Parameters

Table 81 Pulse Input Configuration Parameters

Properties Group	Parameter	Index #	Description	Value or Selection
Block	Order	N/A	Execution Order for Block.	Read Only. To change block order, right-click on a Function Block and select Execution Order.
Address	Rack	0	This is the rack address of the PFQ module.	Enter a value: from 1 to 12.
	Module	0	Module address of the PFQ module.	Enter a value: from 1 to 12.
	Channel	0	Channel on selected Module.	Enter a value: from 1 to 4
Pulse Weight	Pulses per EU	1	Example: if measuring gallons and if 100 pulses = 1 gallon, enter 100.	
Rate	Sample Time	5	The output RATE is calculated by counting number of pulses per Sample Time and scaling it to EU/Time Period. Sample Time is a rolling window of time (updated each scan cycle) used to count pulses. The longer the Sample Time the smoother the rate output and the longer it will take to change; the smaller the Sample Time the noisier the rate output but the quicker the response.	Enter 0-60 seconds using 0.5 sec. intervals.
	Time Period	6	Time unit used to scale the rate from pulses per Sample Time to: EU per Second, or EU per Minute, or EU per Hour	Select Per Second, Per Minute, Per Hour

Preset	Use Remote	4	Uses RPRES input pin in EU.	Click to select.
	Use Local	4	Uses local preset count in EU.	Click to select. Enter value. Enter 0 for no alarm indication on PREI (there are no limits).
Preset Output Action	Latched Until Reset	2		The PFQ module output transistor latches ON until reset. PREI latches ON until PFQ module acknowledges the reset.
	Momentary	2		The PFQ module output transistor turns ON for 1 second. PREI turns on for approx. 1 second. Counter is reset to zero and count continues.

Example

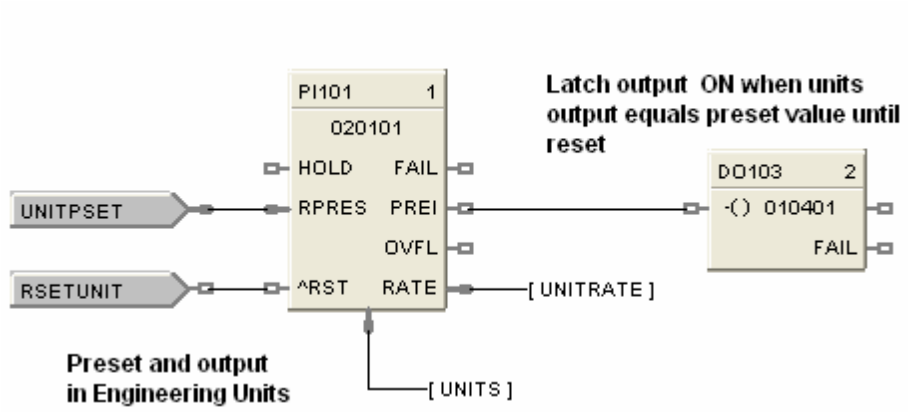

Figure 72 PI function block example

POUT Pulse Output

Description

The POUT label stands for Pulse Output.

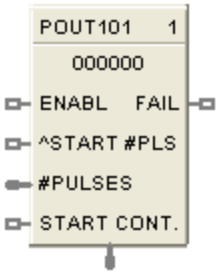

Function

This function block generates a pulse train of a specified number of pulses following a start instruction. The pulse frequency is selectable. The output controls an output transistor on a Pulse/Frequency/Quadrature module. The number of pulses remaining following a start instruction is provided on the output pin.

Inputs

ENABL = Boolean value when ON enables the block, OFF disables the block. No connection defaults to enabled.

^START #PLS = Start # of pulses. An OFF to ON transition starts the pulse train output specified by #PULSES. (Unless START CONT. = ON)

#PULSES = Number of pulses in the pulse train triggered by ^START #PLS.

START CONT. = Start Continuous Pulse Train. When START CONT. = OFF the output pin value is number of pulses remaining. When START CONT. = ON the module's output is a continuous pulse train and output pin value is zero. START CONT. = ON gets priority over a counted pulse train triggered by ^START #PLS.

Outputs

FAIL = Failed Input Indication. A Boolean value that turns ON when the Pulse/ Frequency/ Quadrature Input module reports a failure.

OUT = When START CONT. = OFF, output pin value is number of pulses remaining and the module outputs the number of pulses. When START CONT. = ON, output pin value is zero and the module outputs a continuous pulse train.

Configuration Parameters

Table 82 Pulse Output Configuration Parameters

Properties Group	Parameter	Index #	Description	Value or Selection
Block	Order	N/A	Execution Order for Block	Read Only. To change block order, right-click on a Function Block and select Execution Order.
Address	Rack	0	This is the address of the selected Rack.	Enter a value: from 1 to 5.
	Module	0	Address of selected module	Enter a value: from 1 to 12
	Channel	0	Channel on selected Module. The use of a particular output channel will render the particular input channel unusable.	Enter a value: from 1 to 4
Pulse Train Parameter	Frequency	1	Output frequency of the pulse train. Pulse width = 0.50 x (1/frequency) Range: 0.05ms – 20ms	Enter a value: 25Hz – 10kHz.
Failsafe	Immediate Off	3	Pulse stops and output immediately goes off.	Click on Radio button to select
	Finish Pulse	3	Pulse train finishes then output goes off.	Click on Radio button to select

Example

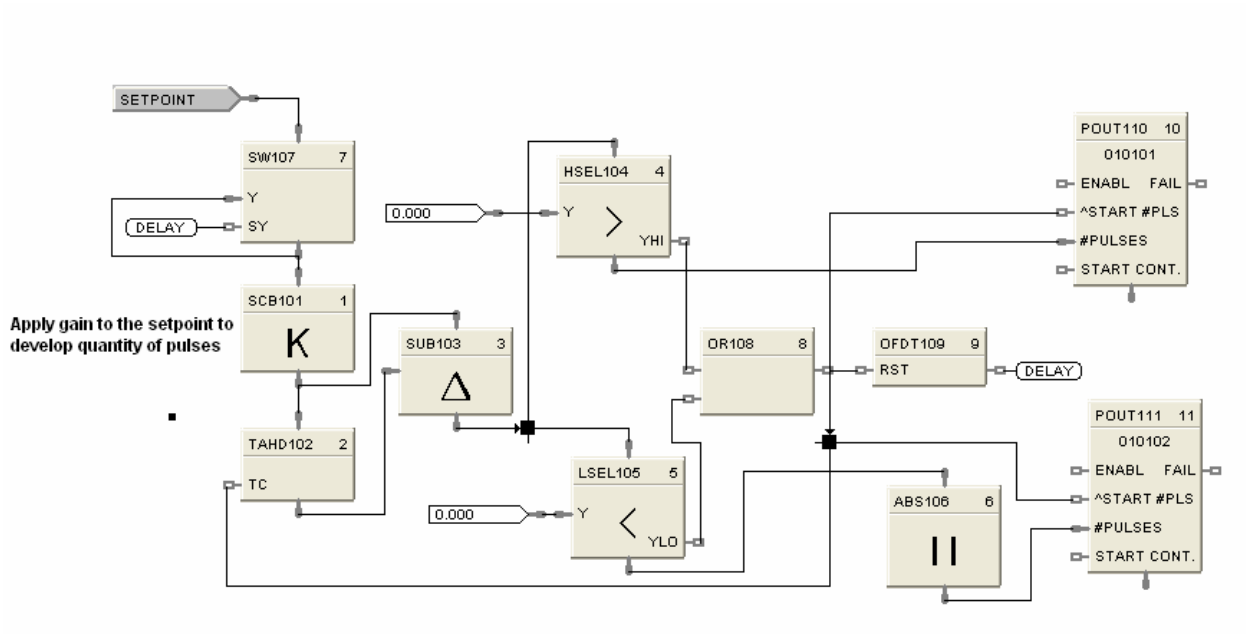

Figure 73 POUT function block example

PID Function Block

Description

The PID label stands for Proportional, Integral, Derivative (3-mode) control action.

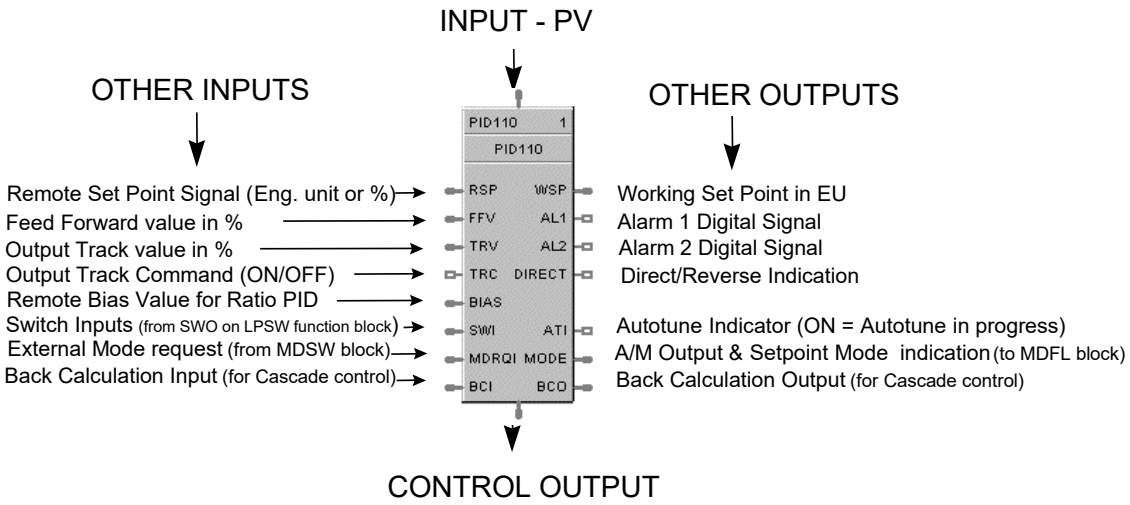

This block is part of the *Loops* category.

Function

Provides Proportional (P), Integral (I) and Derivative (D), (3-mode) control action based on the deviation or error signal created by the difference between the setpoint (SP) and the Process variable analog input value (PV).

It provides two digital output signals for alarms based on configured parameters.

The PID function block provides for Feedforward, Cascade, and Ratio control.

Automatic tuning with Fuzzy Logic Overshoot Suppression can be configured.

Digital inputs may be used to set control mode, select the setpoint source, change control action plus other discrete actions.

For examples of PID Control, refer to:

Basic PID Configuration
Duplex Control
Cascade Control
Ratio Control
Cascade Control of Boiler Drum Level
Cascade Control of a Boiler Drum Level - 3 Element Feedwater Control

Inputs

PV = Process Variable Analog Input value in Engineering Units to be controlled

RSP = Remote Setpoint Analog Input value in Engineering Units or Percent to provide external setpoint

FFV = Feedforward value in percent. The Feedforward value is multiplied by the Feedforward Gain, then directly summed into the output of the PID block.

TRV = Output Track value in Percentage (PID Output = TRV Input when TRC = ON.)

TRC = Output Track Command [ON, OFF] (On -Enables TRV.) (Mode = Local Override)

BIAS = Remote Bias value for Ratio PID

SWI = Switch Inputs (from SWO on LPSW function block)
0 = No Change
1 = Initiate Autotuning
2 = Change Control Action
4 = Force Bumpless Transfer
8 = Switch to Tune Set 1
16 = Switch to Tune Set 2

MDRQI = External Mode request (typically connected to the MDRQO output of a MDSW function block that encoded discrete switch inputs).
0 = No Change
1 = Manual Mode Request
2 = Auto Mode Request
4 = Local Mode Request
8 = Remote Mode Request

BCI = Back Calculation Input (for blocks used as Cascade Primary)—See ATTENTION 2.

Outputs

OUT = Control Output

WSP = Working Setpoint in Engineering Units for monitoring

AL1 = Alarm 1 - Digital Signal

AL2 = Alarm 2 - Digital Signal

DIRECT = ON = Direct; OFF = Reverse

ATI = Autotune Indicator (ON = Autotune in Progress)

MODE = Loop mode status (typically connected to the Mode Flags block for encoding). Value indicates modes as follows:

0.0	RSP AUTO
1.0	RSP MAN
2.0	RSP Initialization Manual (See ATTENTION 1)
3.0	RSP Local Override (See ATTENTION 1)
4.0	LSP AUTO
5.0	LSP MAN
6.0	LSP Initialization Manual (See ATTENTION 1)
7.0	LSP Local Override (See ATTENTION 1)

BCO - Back Calculation Output (for blocks used as Cascade Secondary)—See ATTENTION 2.

ATTENTION

1. When a request to change from Auto to manual is received and:
   - the request comes from the operator Interface, *the request is ignored*.
   - the request comes from the Mode Switch (MDSW) function block, the request is retained and when leaving the Initialization Mode or Local Override Mode the loop will go to manual.
2. BCO output is provided for applications where the block is used as a cascade secondary. BCI input is provided for applications where the block is used as a cascade primary. When the BCO output of a secondary loop is connected to the BCI input of a primary loop, bumpless transfer is achieved when the secondary is switched into remote setpoint (i.e., cascade) mode. In addition, the primary loop is prevented from reset windup when the secondary is de-coupled from the process. The secondary is de-coupled from the process when it is in local setpoint mode or manual output mode or has reached a setpoint or output limit or is integral limiting because of its BCI input. For example, see Figure 76.
3. Can select Loop-Mode in HC Designer: **Edit** → Loop-Mode Priority, affecting ALL loops.

Operation details

The PV Hi/Lo range values configured in the PID-Range/Limit Tab determine the points at which the block status changes to a fail condition, driving the output to the configured failsafe value. There is no dead band for these PID block limits. To prevent the loop from going to failsafe, the user can adjust the PV Hi/Lo settings to allow for slight variations of the PV value from an AI channel that operates at or near these limits. Additionally, if the PV value exceeds the configured limits, the PID block will indicate a PV out of range status and will cause the bad block pin of the system monitor block to energize.

When the control mode is switched from Manual to Automatic, the mode switchover is bumpless and the PID loop's integration time is set to zero. Control Action is then determined by the control loop configuration and tuning.

In version 4.X controller firmware, the system default is set to cause a manual mode to override the Track command; the user has the option to change this setting in HC Designer to allow the Track command to override the Manual mode output. This action is a master setting and cannot be configured per loop.

When the output of a PID loop is driven to the Hi or Lo Output limit, the integral value is clamped to prevent reset wind up.

Block properties

Double click on the function block to access the function block properties dialog box.

Dialog box structure

The PID properties dialog box is divided into 7 tab cards

GENERAL
START/RESTART
RSP
RANGE/LIMIT
TUNING
ACCUTUNE III
ALARMS

Click on the tab to access the properties for that tab.

GENERAL tab

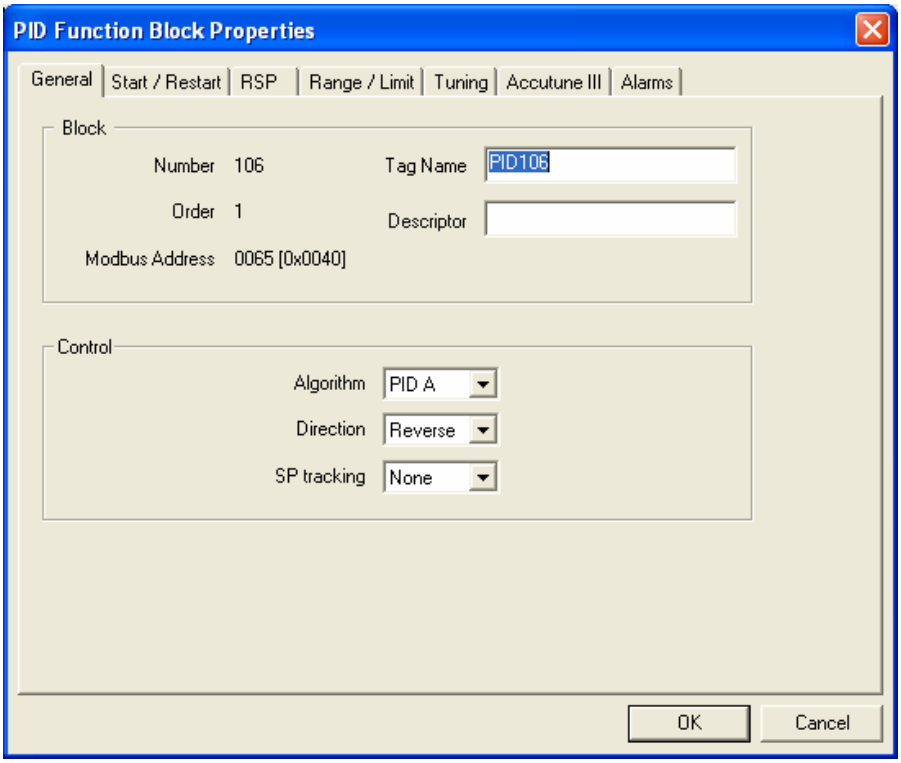
PID Function Block Properties
General
Start / Restart
RSP
Range / Limit
Tuning
Accutune III
Alarms
Block
Number 106
Tag Name PID106
Order 1
Descriptor
Modbus Address 0065 [0x0040]
Control
Algorithm PID A
Direction Reverse
SP tracking None
OK
Cancel

Table 83 PID General tab configuration parameters

Properties Group	Parameter	Index #	Parameter Description	Value or Selection
Block	**Order**	N/A	Execution Order	Read Only. To change block order, right-click on a Function Block and select Execution Order.
	Tag Name	N/A	32-characters unique tag name (ASCII characters only)	Up to 32-characters
	Descriptor	N/A	Block descriptor	Up to 32-characters
Control	**Algorithm**	N/A	Control Algorithm ***Note: In PID B, step changes in setpoint will not bump the output; the output will slew smoothly to the new value.*** ***In PID A, a step change in setpoint will result in a step change in output***.	**PID A** - is normally used for 3 mode control. The output can be adjusted somewhere between 100 % and 0 %. It applies all three control actions - Proportional (P), Integral (I), and Derivative (D) - to the error signal. **PID B** - Unlike the PID-A equation, the controller gives only an integral response to a setpoint change, with no effect on the output due to the Gain or Rate action, and gives full response to PV changes. **DUPA -** like PID A but provides an automatic method to switch tuning constant sets for Heat/Cool applications. **DUPB -** like PID B but provides an automatic method to switch tuning constant sets for Heat/Cool applications. NOTE: With PID B or DUPB selection, you **will not** be allowed to set RESET or RPM to 0.00 (OFF). Reset must be enabled.
	Direction	N/A	Control Action	**DIRECT** - PID action causes output to **increase** as process variable increases. **REVERSE** - PID action causes output to **decrease** as process variable increases.
	SP Tracking	N/A	Setpoint Tracking	**None** **Track PV** - When control mode is “manual”, local setpoint tracks process variable. **Track RSP** - When setpoint is “remote setpoint”, local setpoint tracks remote setpoint.

START/RESTART tab

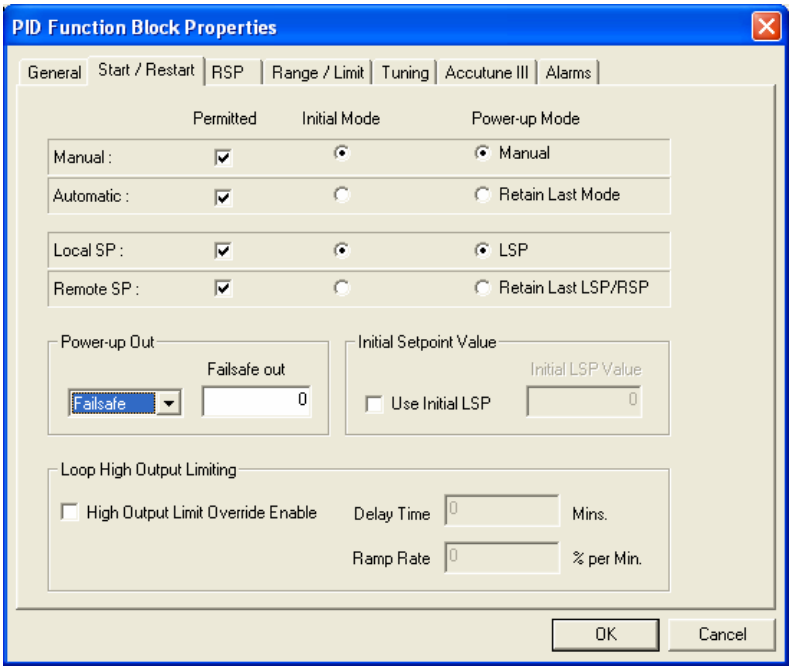

Table 84 PID Start/Restart tab configuration parameter

Modes and Setpoints	**Permitted Mode**	MAN 8 AUTO 9	Mode permitted for the initial start and power up mode.	**Manual** **Automatic** ***May select both, must select one.***
	Permitted Setpoint	LSP 10 RSP 11	Setpoint permitted for the initial start and power up mode.	**Local Setpoint** **Remote Setpoint** ***May select both, must select one.***
	Initial Mode	N/A	Mode at NEWSTART **Newstart** is the first scan cycle following the cold start of the controller	**Manual** **Automatic** *Select one*
	Setpoint for Initial Mode	N/A	Setpoint at NEWSTART **Newstart** is the first scan cycle following the cold start of the controller	**Local Setpoint** **Remote Setpoint** *Select one*
	Power up Mode	N/A	Mode at power up	**Manual** **Retain Last Mode** Same mode (auto or manual) *Select one*
	Power up Setpoint	N/A	Setpoint at power up	**Local Setpoint** **Retain Last LSP/RSP** Same Setpoint (LSP or RSP) ***Select one***

Power Up Out	**Power Up Out**	N/A	Output at Power up	**LAST OUT** - Same as at power down. **FAILSAFE** - Failsafe output value.
	Failsafe Out	16	Failsafe Output Value	–5 % to 105 %
Initial Setpoint Value	**Use initial LSP**	49	Use Initial Local Setpoint	Click on radio button to select
	Initial LSP Value	50	Initial Local Setpoint Value	Enter Initial Local Setpoint Value
High Output Limit Select	**Use Limit Control - Limit Value**	51	High Limit Override **See NOTE 1**	Click radio button to select.
	Delay Time	52	Delay Time for High Limit Output Select	Enter time in minutes to use TRV as the output high limit. See **NOTE 1.**
	Ramp Rate	53	Ramp Rate for High Limit Output Select	**Enter Rate in % per minute to ramp the default output high limit after delay time expires.**

Note 1. When ON, the HiLimOvr parameter causes the meaning of TRC and TRV to be redefined for process startup rate control. In this case, TRC set ON causes the algorithm to calculate a value to override the default output high limit.

The initial value of the limit override comes from TRV. This value is held until the configured delay time expires. A delay time of zero means delay indefinitely. In this case, the output high limit will track the value on TRV until such time that TRC returns to OFF.

When the delay time expires, the output limit will ramp to the default configured value and the configured ramp rate. When the ramped output limit equals or exceeds the default configured value, the output limit override status is set OFF and the default value is used. A ramp rate of zero will cause immediate termination of the high output limit override.

A transition of the TRC input to OFF at any time will terminate the output limit override function and restore the limit to the default configured value. The TRC input must transition to OFF before the output limit override function can be started again.

RSP tab

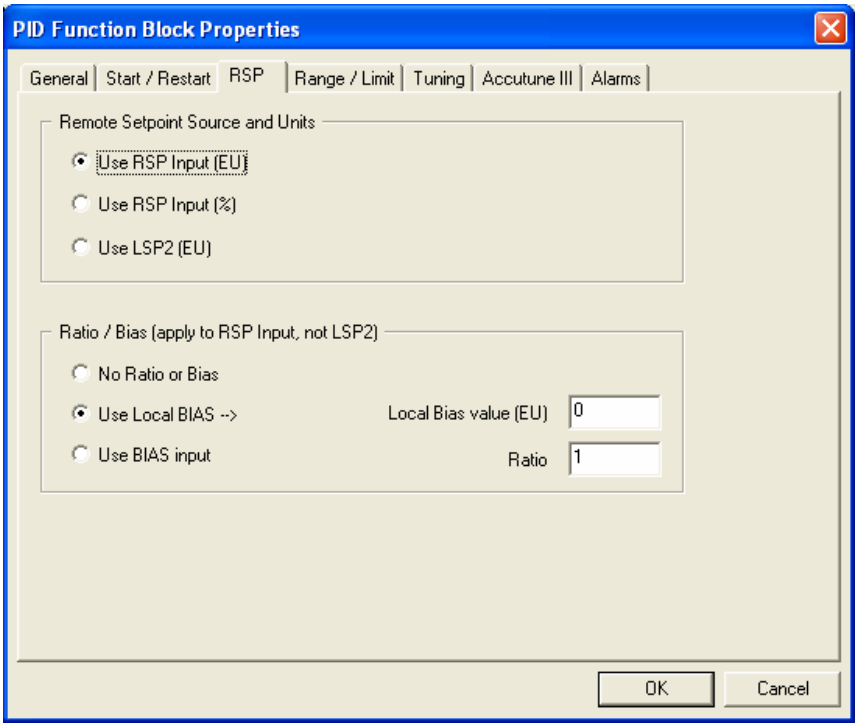

Table 85 PID RSP tab configuration parameters

Properties Group	Parameter	Index #	Parameter Description	Value or Selection
Remote Setpoint Source and Units	**Use RSP Input (EU)**	N/A	Use Remote Setpoint in Engineering Units	Click on radio button to select
	Use RSP Input (%)		Use Remote Setpoint in Percent	Click on radio button to select
	Use LSP2 (EU)		Use Local Setpoint #2 in Engineering Units	Click on radio button to select
Ratio/Bias **(RSP Input Only)**	**No Ratio or Bias**	N/A	No ratio and bias applied to the function block	Click on radio button to select
	Use Local Bias		Use Bias value selected on Tab	Click on radio button to select Enter value at "**Local Bias Value**" on tab.
	Use Bias Input		Use Bias value attached to an input to the block	Click on radio button to select
	Local Bias Value (EU)	46	Local bias value in engineering units	Enter local bias value –99999 to 99999
	Ratio	45	Gain value for Ratio PID	–20 to +20

RANGE/LIMIT tab

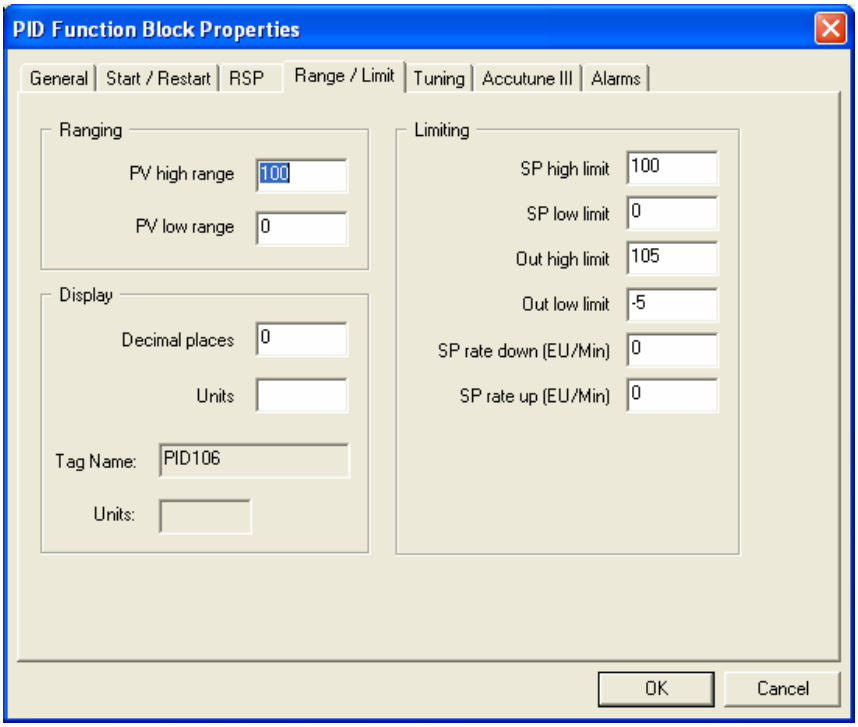

Table 86 PID Range/limit tab configuration parameters

Properties Group	Parameter	Index #	Parameter Description	Value or Selection
Ranging	**PV High Range**	4	PV High Range Value	–99999 to 99999
	PV Low Range	5	PV Low Range Value	–99999 to 99999
Display	**Decimal Places**	N/A	Number of digits to display after decimal point.	0 to 5
	Units	N/A	Text to display for EU	6 characters
	DEV Bar Range (EU)	N/A	Deviation Bar Range on the Operator Interface	–99999 to 99999
Limiting	**SP High Limit**	17	Setpoint High Limit Value - prevents the local and remote setpoints from going above the value set here.	–99999 to 99999
	SP Low Limit	18	Setpoint Low Limit Value - prevents the local and remote setpoints from going below the value set here.	–99999 to 99999
	Out High Limit	20	Output High Limit Value - is the highest value of output beyond which you do not want the automatic output to exceed	–5 % to 105 %
	Out Low Limit	21	Output Low Limit Value - is the lowest value of output beyond which you do not want the automatic output to exceed	–5 % to 105 %
	SP Rate Down	41	Setpoint Rate Down value - when making a setpoint change, this is the rate at which setpoint will change from the original setpoint **down** to the new one.	0 (off) to 9999 (eu/min)
	SP Rate Up	42	Setpoint Rate Up value - when making a setpoint change, this is the rate at which setpoint will change from the original setpoint **up** to the new one.	0 (off) to 9999 (eu/min)

TUNING tab

ATTENTION

Use of Tune SET 1 or 2 can be selected via input (SWI) from the Loop Switch block output (SWO) or, in the case of DUP_A or DUP_B, automatically depending on the value of the previous output (≥ 50 % or < 50 %).

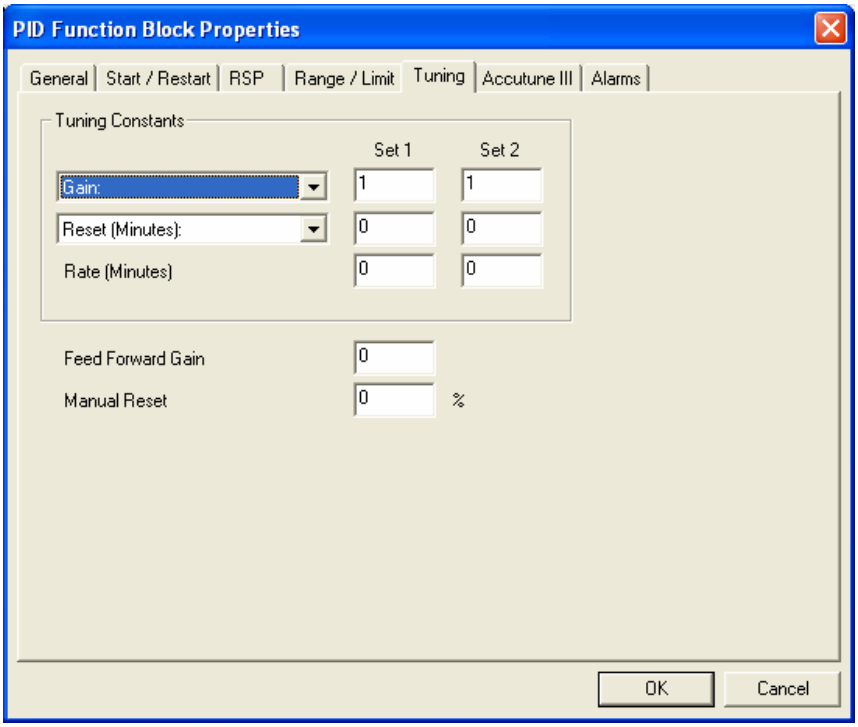

Table 87 PID Tuning tab configuration parameters

Properties Group	Parameter	Index #	Parameter Description	Value or Selection
Tuning Constants	**Prop Band** **or** **Gain**	0 PB1 or Gain1 36 PB2 or Gain2	Proportional Band (PB) - is the percentage of the range of the measured variable for which a proportional controller will produce a 100 % change in its output. Gain - is the ratio of output change (%) over the measured variable change (%) that caused it. $G = \frac{100\ \%}{PB\ \%}$ where PB is the proportional Band (in %)	0.1 to 1000 0.1 % to 1000 % ATTENTION: Enter values for tuning set 1 and tuning set 2 in specified fields.
	Reset Minutes **or** **Repeats per Minute**	2 Reset1 or 38 Reset2	RESET (Integral Time) - adjusts the controller's output according to both the size of the deviation (SP-PV) and the time it lasts. The amount of corrective action depends on the value of Gain. The reset adjustment is measured as how many times proportional action is repeated per minute (Repeats/minute) or how many minutes before one repeat of the proportional action occurs (Minutes/repeat).	0.02 to 50.00 *Must be enabled for PID-B or DUP-B algorithm selections.*
	Rate Minutes	1 Rate1 or 37Rate 2	RATE action, in minutes affects the controller's output whenever the deviation is changing; and affects it more when the deviation is changing faster.	0 or 0.1 to 10.00 minutes 0 = OFF
Feedforward Gain	**Feedforward Gain**	43	Applies Gain to the feedforward value (FFV). Feedforward Input is multiplied by this value.	0.0 to 10.0
Manual Reset	**Manual Reset**	32	MANUAL RESET- is only applicable if you do not use RESET (Integral Time) Allows correction of output to account for load changes to bring the PV up to setpoint.	–100 to 100 (in % of Output)

ACCUTUNEIII tab

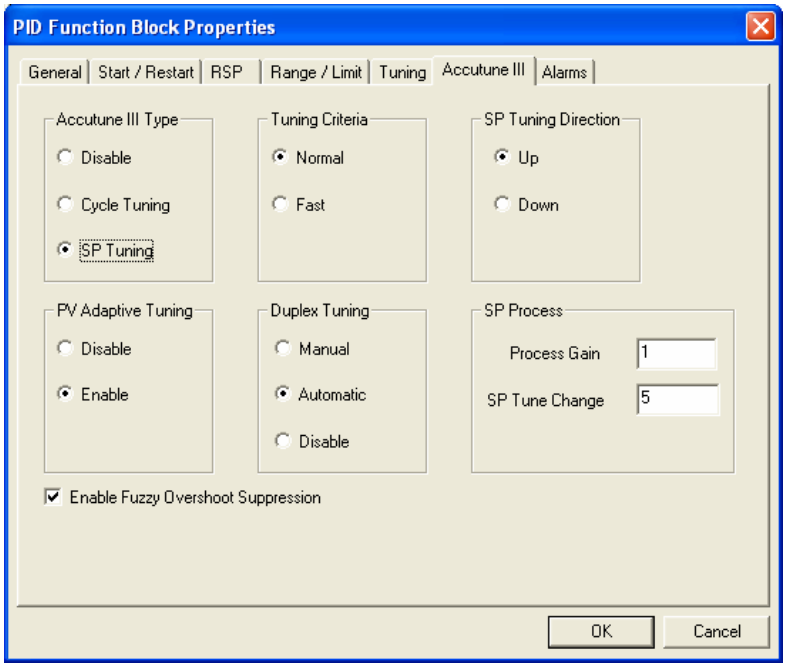

Table 88 PID Accutune III tab configuration parameters

Properties Group	Parameter	Index #	Parameter Description	Value or Selection
Accutune III Type	**Disabled**	N/A	Disables Accutune III	Click on radio button to select.
	Cycle Tuning		Tuning parameter values are derived from the process response to the resultant action of causing the PV to oscillate about the SP value. (Note 1 - Page 330)	Click on radio button to select.
	SP Tuning		Tuning based on the process response to a SP change. (Note 2 – Page 330)	Click on radio button to select.
SP Tuning Direction **(For SP Tuning selection)**	**UP** **Down**	N/A	The selection of either UP or DOWN results in the SP Change value added or subtracted from the present SP value.	Click on radio button to select.
SP Process **(For SP Tuning selection)**	**Process Gain** **SPTune Change**	16 57	Gain identification value for the process. This value is used to estimate the size of the initial output step for a SP Tune. This defines the value of the initial output step change that is used as the target for process identification.	Range is 0.10 to 10.0 Normal value is 1. Range is: 5 to 15 percent.

PV Adaptive Tuning	**Disable**	N/A	Disables PV Adaptive tune	Click on radio button to select.
	Enable	N/A	This method adapts a tuned process to changing system characteristics over time. When the PV deviates from the SP by a certain amount for any reason. (Note 3 – Page 330)	Click on radio button to select.
Tuning Criteria	**Normal**	N/A	Conservative tuning designed to calculate critically damped tuning parameter values that produce minimal overshoot.	Click on radio button to select.
	Fast	N/A	More aggressive tuning than Normal, designed to calculate under damped parameter values providing faster control to the setpoint but may have some overshot.	
Duplex Tuning ***(Active for Algorithm DUPA or DUPB on General Tab with Cycle Tuning)***	**Disable** **Manual** **Automatic**	N/A	Disable -Duplex type tuning is disabled and simplex type tuning is used instead. Manual - Tuning must be initiated manually for each side. The current LSP or RSP value is used as the target SP for the desired heat or cool side tuning. For the heat side, the output cycles between 50 percent and the high output limit and for the cool side the output cycles between 50 percent and the low output limit. Tuning values are calculated and stored only for the side tuned. Heat and Cool tuning are sequentially performed automatically. During the operation of this tuning the target SP used is the mid point between the high output limit and 50 percent for the heat side and the low output limit and 50 percent for the cool side. During tuning for each side the cycling of the output results in the PV oscillating around the target SP value. From the data gathered during the oscillations, tuning values are calculated and stored for each side. After tuning on both sides is completed, the process SP is returned to the value of the	Click on radio button to select.

		last SP used prior to the initiation of the tuning procedure.	
Enable Fuzzy Overshoot Suppression **Click on block to select**	34	Fuzzy Overshoot Suppression minimizes overshoot after a setpoint change or a process disturbance. The fuzzy logic observes the speed and direction of the PV signal as it approaches the setpoint and temporarily modifies the internal controller response action as necessary to avoid an overshoot. There is no change to the PID algorithm, and the fuzzy logic does not alter the PID tuning parameters. This feature can be independently Enabled or Disabled as required by the application to work with “TUNE” On-Demand tuning.	

ATTENTION

Accutune III is an On-demand tune only. You must provide a 0 to 1 transition to start another tuning cycle. The tuning will disturb the output to evaluate the tuning constants required.

Note 1: CYCLE TUNING - This tuning method uses the measured ultimate gain and period to produce tuning parameter values. Cycle tuning does not distinguish between process lags and always results in gain based on PV amplitude and calculates values of Reset and Rate based on time of the SP crossings (The Reset value is always 4x the Rate value.) This method does not require a stable process initially and the process may be moving. Cycle tuning is applicable to Three Position Step control and can be used for integrating processes (level control).

Note 2: SP TUNING - When initiated the control loop is put into an initial temporary manual state until the process characteristics are identified. This period may last up to a minute. During this time the Tune status shows Not Ready, then an initial output step is made using the preconfigured size and direction parameters along with the preset output value. The resultant process action is used to determine the tuning parameters and once the process identification has completed, the loop is returned to automatic control.

Note 3: PV ADAPTIVE TUNING - This method adapts a tuned process to changing system characteristics over time. When the PV deviates from the SP by a certain amount for any reason, the adaptive tuning algorithm becomes active and begins to observe the resulting PV action. If the process becomes unstable and oscillates, PV Adaptive Tuning eventually brings the process into control by retuning parameter values (as needed) using a systematic approach defined by an expert based method of tuning rules. Should the process not oscillate but be observed as too fast or sluggish, a different expert rules set is applied to result in the slowing down or speeding up of the process by adjusting certain tuning parameter values. This method continuously learns the process as PV deviations are observed and adapts the tuning parameters to the process response.

ALARMS tab

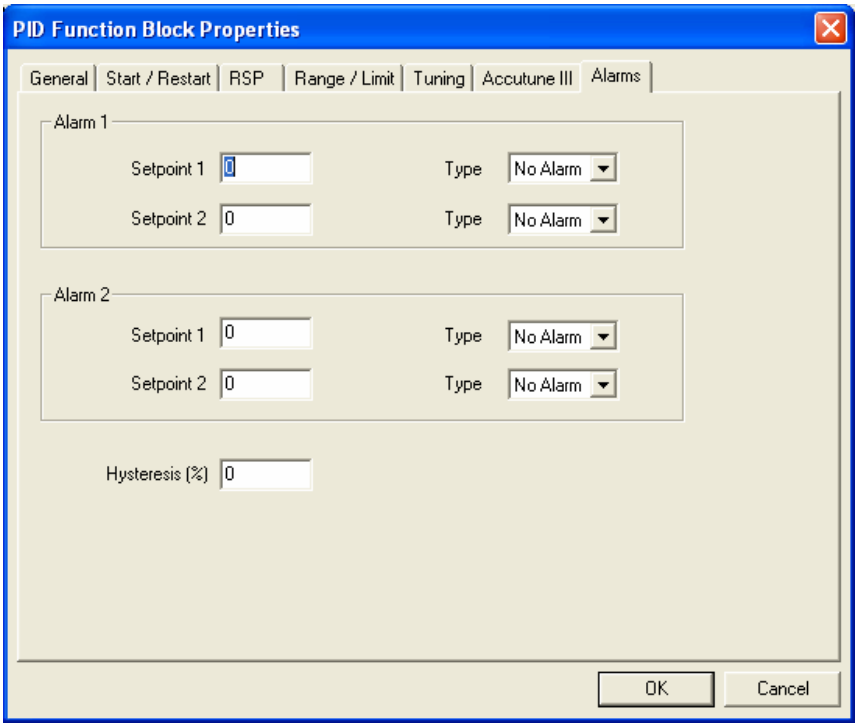
PID Function Block Properties
General
Start / Restart
RSP
Range / Limit
Tuning
Accutune III
Alarms
Alarm 1
Setpoint 1
0
Type
No Alarm
Setpoint 2
0
Type
No Alarm
Alarm 2
Setpoint 1
0
Type
No Alarm
Setpoint 2
0
Type
No Alarm
Hysteresis (%)
0
OK
Cancel

Table 89 PID Alarms tab configuration parameters

Properties Group	Parameter	Index #	Parameter Description	Value or Selection
Alarm 1	**Setpoint 1**	23	**Alarm 1 Setpoint 1 Value** - this is the value at which you want the alarm type chose below to activate	–99999 to 99999 in Engineering Units Within the PV range when alarm type is PV or SP Within PV span when alarm type is DEV –5 % to 105 % when alarm type is output.
	Type	N/A	**Alarm 1 Setpoint 1 Type** - select what you want Alarm 1 Setpoint 1 to represent.	Selections: NO ALARM PV_HIGH — High PV Alarm PV_LOW — Low PV Alarm DEV_HIGH — High Deviation alarm DEV_LOW — Low Deviation alarm SP_HIGH — High Setpoint alarm SP_LOW — Low Setpoint alarm OUT_HIGH — High Output alarm OUT_LOW — Low Output alarm
	Setpoint 2	24	Alarm 1 Setpoint 2 Value	Same as **Alarm 1 Setpoint 1**
	Type	N/A	Alarm 1 Setpoint 2 Type	Same as **Alarm 1 Setpoint 1**
Alarm 2	**Setpoint 1**	25	Alarm 2 Setpoint 1 Value	Same as **Alarm 1 Setpoint 1**
	Type	N/A	Alarm 2 Setpoint 1 Type	Same as **Alarm 1 Setpoint 1**
	Setpoint 2	26	Alarm 2 Setpoint 2 Value	Same as **Alarm 1 Setpoint 1**
	Type	N/A	Alarm 2 Setpoint 2 Type	Same as **Alarm 1 Setpoint 1**
Alarm Hysteresis	**%**	31	Alarm Hysteresis in %	0 % to 5 %

Example 1 - Basic PID configuration example

Figure 74 shows a Function Block Diagram using a simplified PID Configuration (reference only) and its basic Configuration.

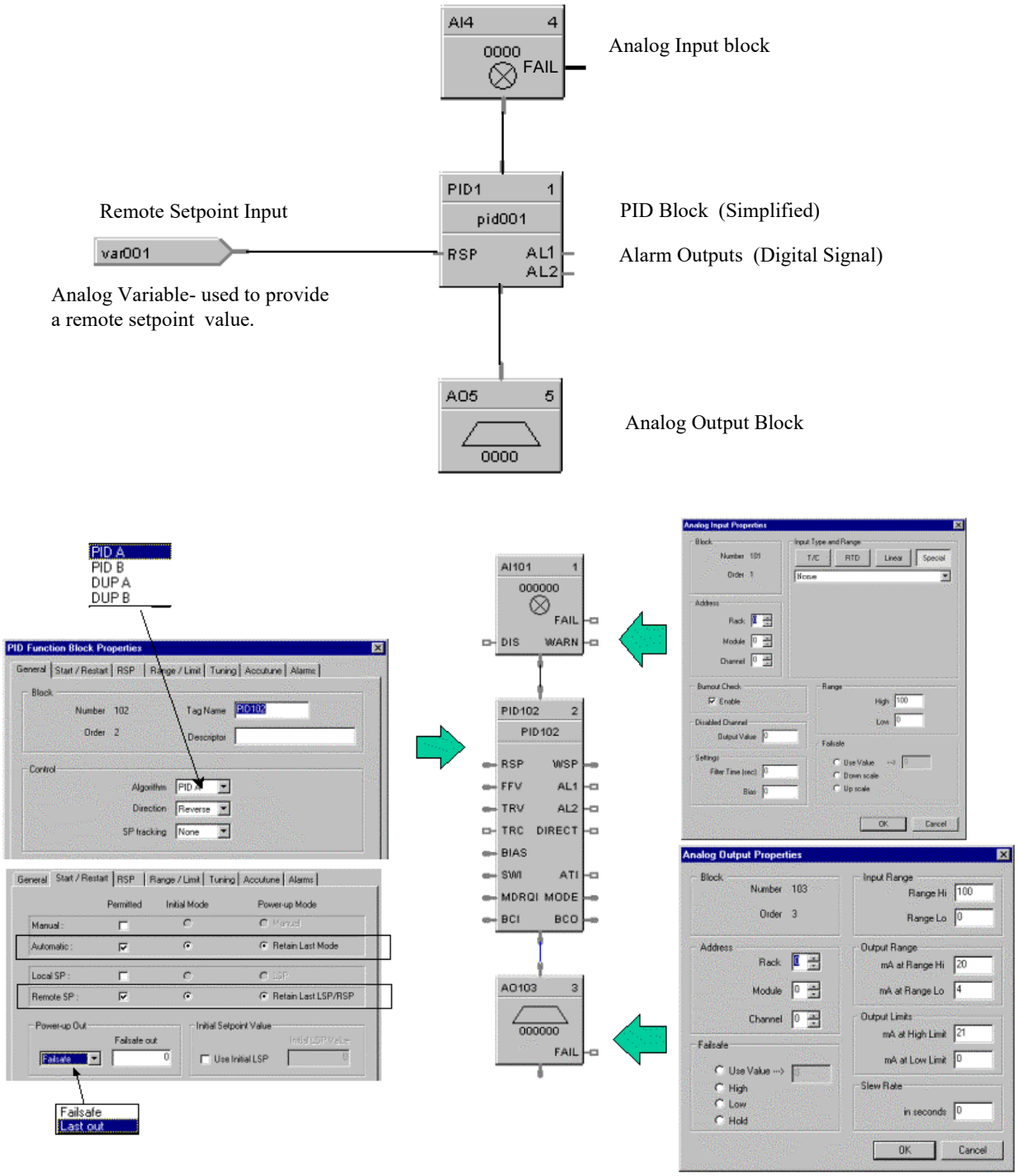

Figure 74 PID function block example

Example 2 - Duplex control - PID with heat/cool (duplex) output

Use standard PID Function Block

- Select PID A Duplex or PID B Duplex
- Set to Reverse acting
- Use Tuning Constant Set #1 from 50% to 100% Heat Output
- Use Tuning Constant Set #2 from 50 % to 0% Cool Output

Choose Output Types for Heat and Cool (Current/Current, Current/Time Proportioning, Time Prop./ Time Prop., etc.), connect each to PID block output.

Use output block scaling to set duplex output spans. Set output scaling Range Lo and Hi to 50 - 100 % for heat output and 50% to 0% for cooling output, respectively. You may need to adjust range limits for overlap or deadband as required.

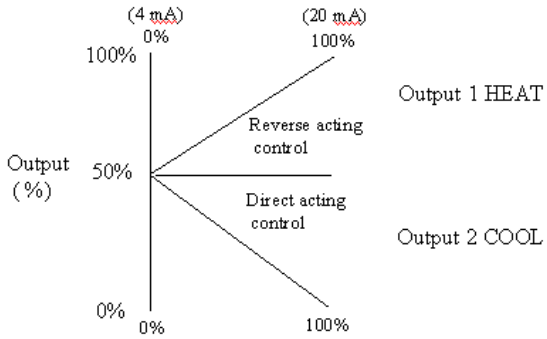

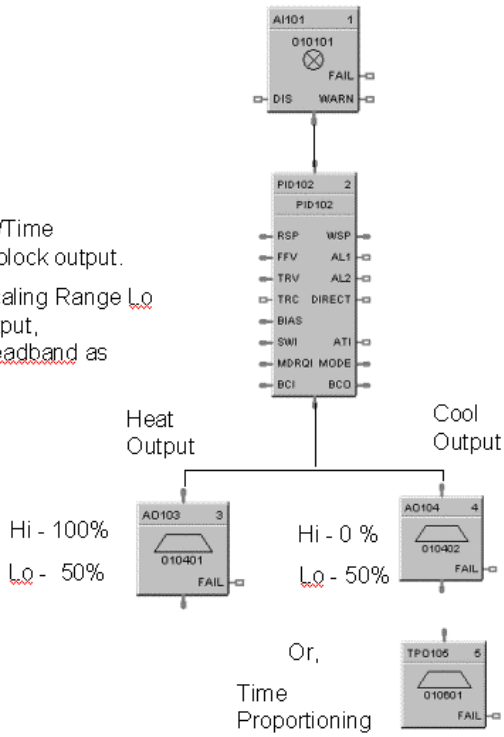

Figure 75 Duplex control example

Example 3 - Cascade control

The Cascade loop uses 2 PID blocks with the Back Calculation pin of the secondary connected to the primary loop. This transfers values back to the primary loop to adjust the PID for changes due to manual control.

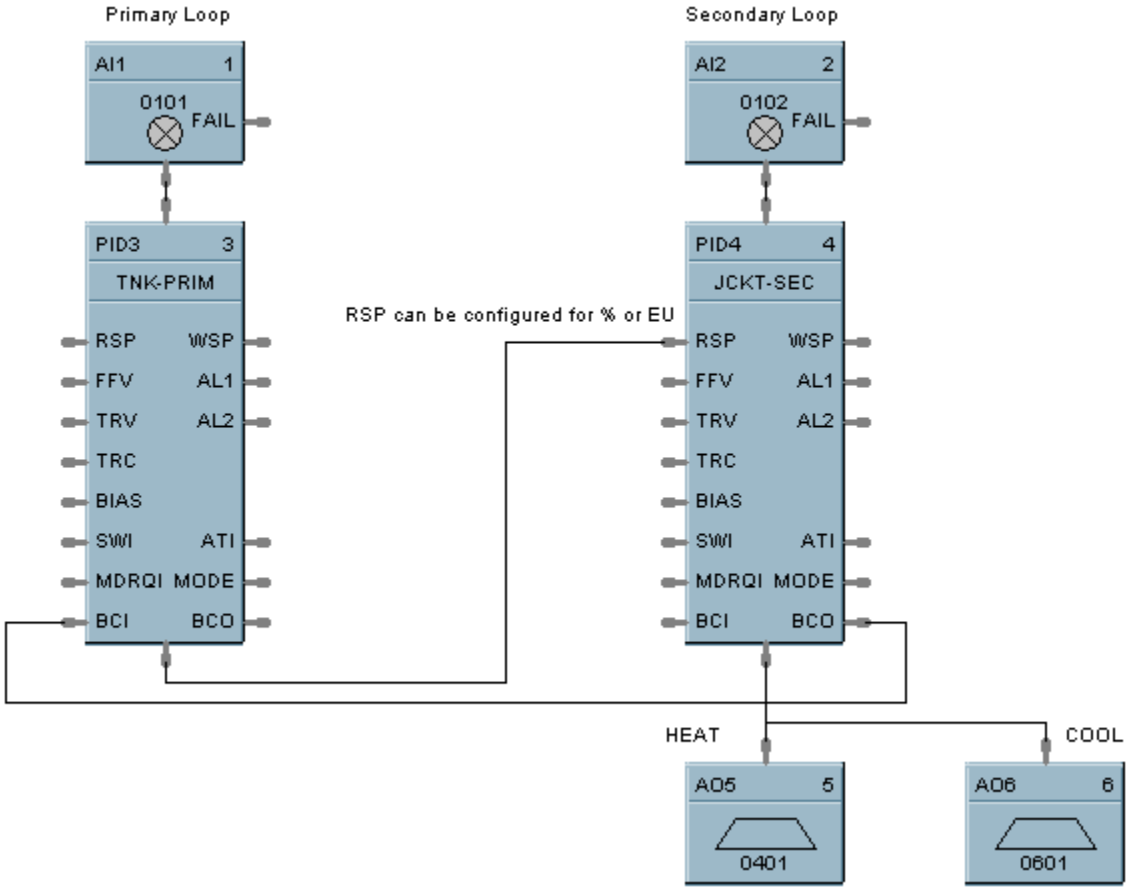

Figure 76 Cascade control example

Example 4 - Ratio control

The RATIO control loop requires selection of the remote SP of the PID for ratio control. The Ratio and Bias values are available for adjustment from the Control Setup screen of the Operator Interface. The Bias may be a local value or come from an external source such as an O2 analyzer trim arrangement. You may elect to use % for the ratioed inputs (typically for boiler applications) or Eng. Units (EU) (for feed flows to a reactor, for example).

Air (controlled variable)= Ratio x Fuel (RSP, or wild variable) + BIAS

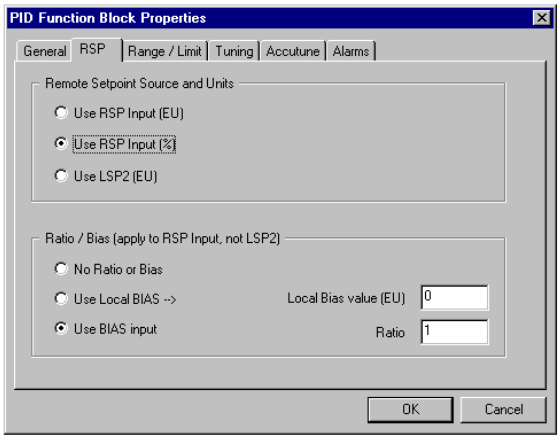

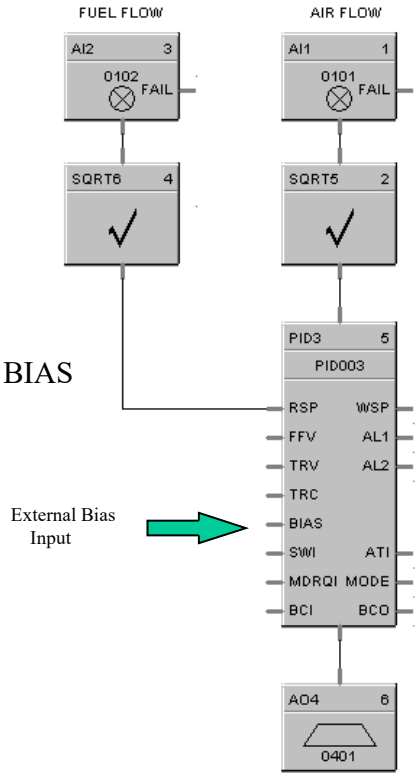

Figure 77 Ratio control example

Example 5 - Cascade control of a boiler drum level - basic

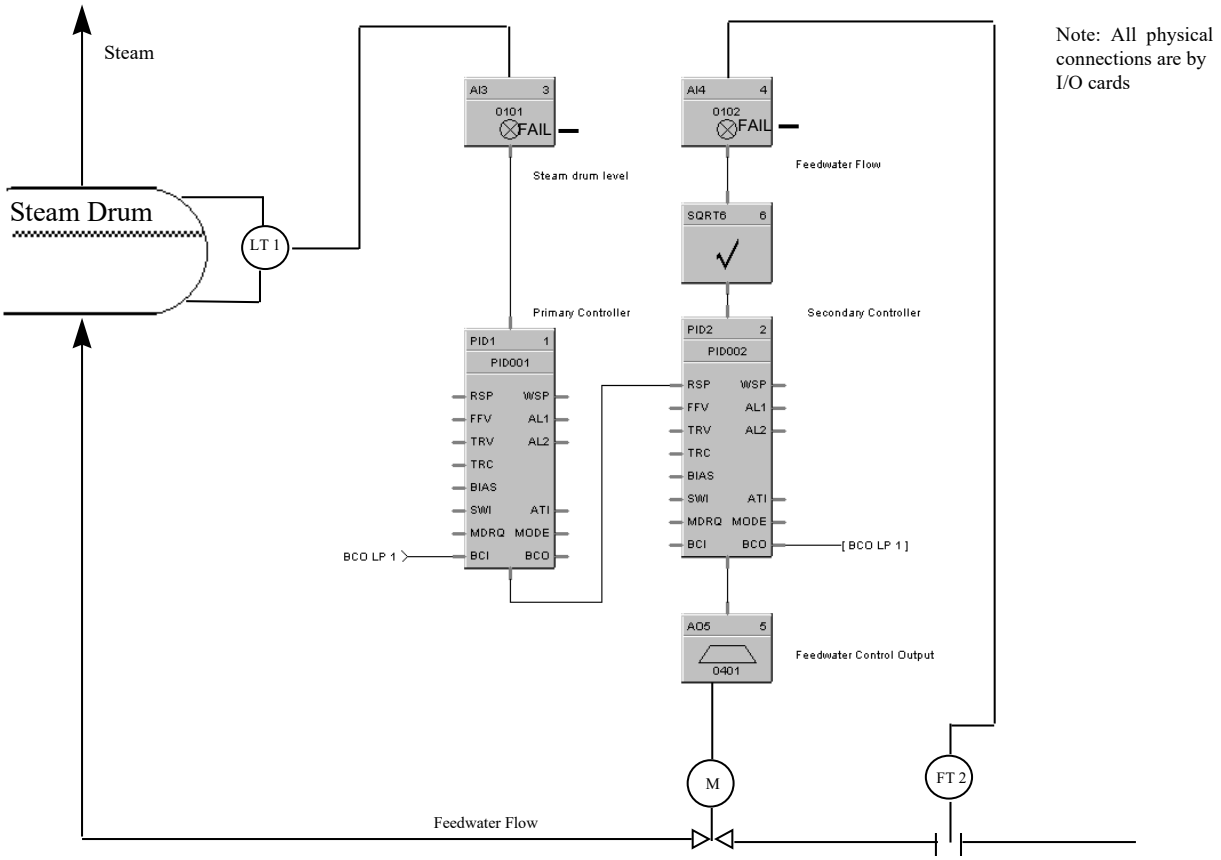

Figure 78 Cascade control of a boiler drum level - basic

Example 6 - Cascade control of a boiler drum level - 3 element feedwater control

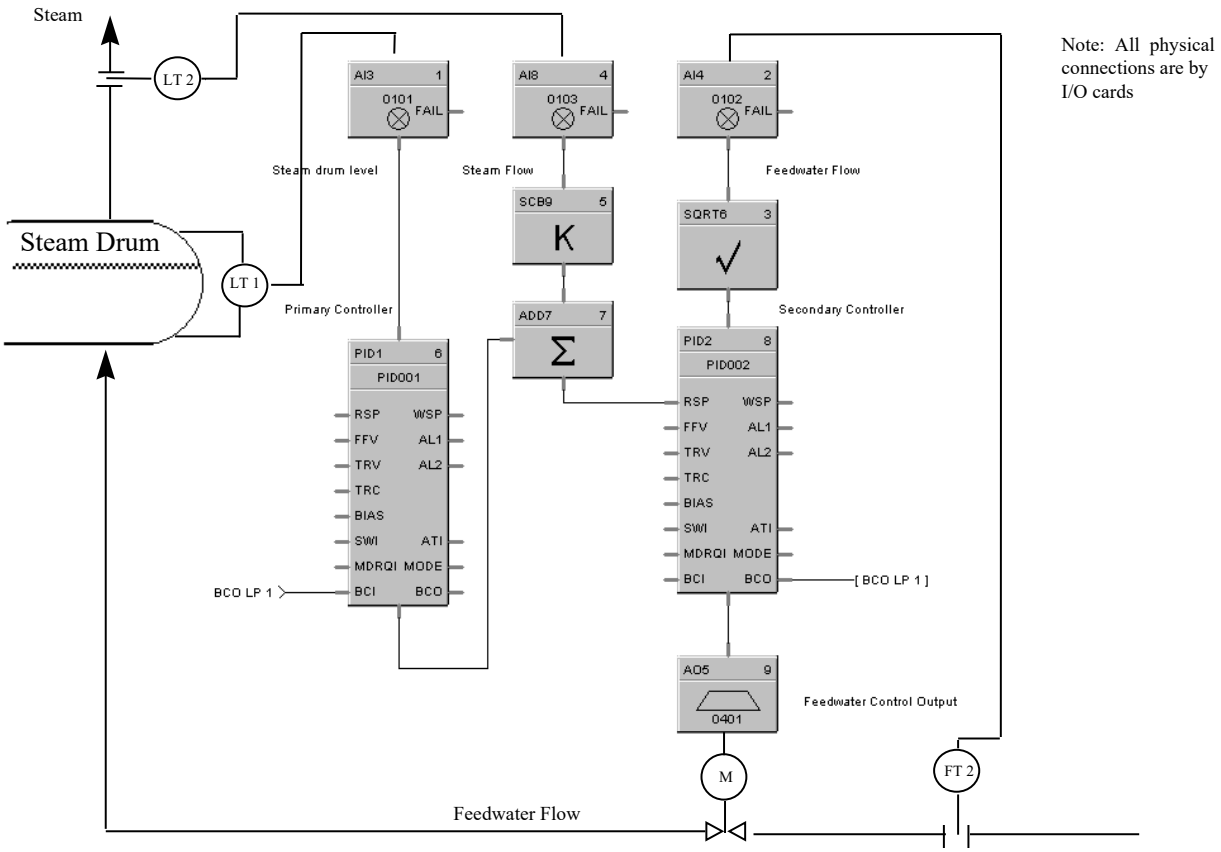

Figure 79 Cascade control of a boiler drum level - 3 element feedwater control

PPO Position Proportional Output Function Block

Description

The **PPO** label stands for **Position Proportional Output.** This block is part of the *I/O Blocks* category.

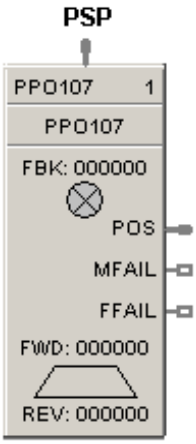

Function

Allows the control of a valve or other actuator having an electric motor driven by two digital output channels; one to move the motor upscale, the other to move it downscale, with a feedback signal to indicate motor position. Supports motor speeds from 12 -300 seconds.
Note: PPO block requires calibration to the specific motor used. The calibration data is stored within the configuration file, so it is important to save the controller configuration after a calibration is performed. Reference PPO calibration in the Designer User Guide, 51-52-25-100.”

Input

PSP = Position Setpoint – Scaled or %(default)

Output

POS = Position Feedback Value from Feedback Signal (%)
MFAIL = Motor failure Indication. ON = Motor Failure (not moving)
FFAIL = Failed Feedback Input Indicator – AI Error

Block properties

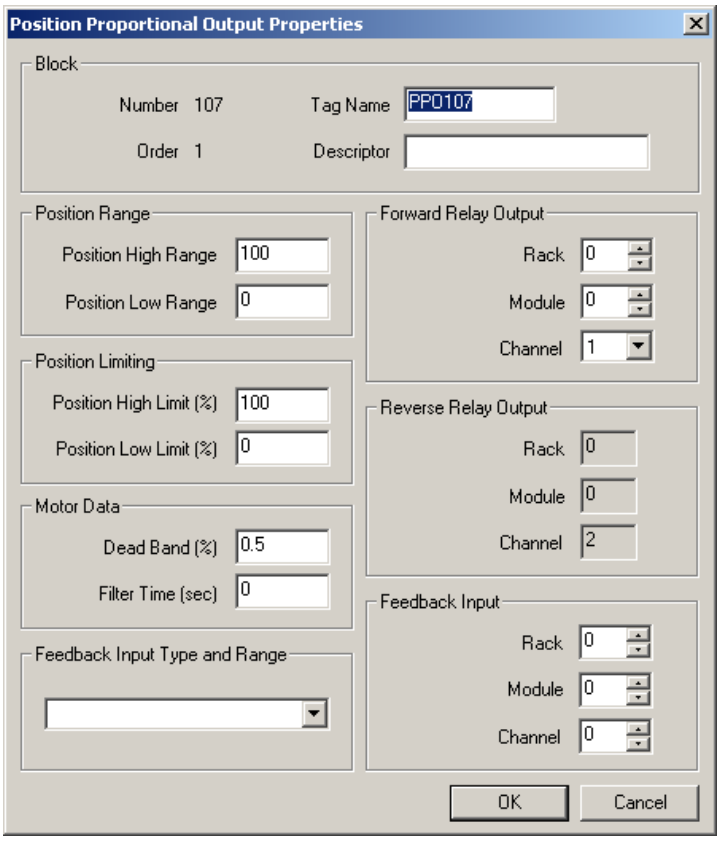

Double click on the function block to access the function block properties dialog box.

Configurable Parameters

Table 90 Position Proportional Motor Control

Parameter	Index #	Parameter Description	Value or Selection
Block Order	N/A	Execution Order for Block	Read Only. To change block order, right-click on a Function Block and select Execution Order.
Position Setpoint High Range	4	Position Setpoint High Range Value Engineering Unit - value of input that corresponds to 100 % output value	-99999 to 999999 Default = 100
Position Setpoint Low Range	5	Position Setpoint Low Range Value Engineering Unit - value of input that corresponds to 0 % output value	-99999 to 999999 Default = 0.0
High Position Limit	20	High Position Limit in Percent	0 to 100% Default = 100%
Low Position Limit	21	Low Position Limit in Percent	0 to 100% Default = 0%
Deadband (%)	8	Adjustable gap between forward and reverse motor operation (the range over which the output can change before a relay is energized)	0.5 to 5%
Filter Time (sec)	10	A software digital filter is provided to smooth the slidewire feedback input.	0 to 3 seconds. 0=no filter
Feedback Input type and range	3	Input type choices for the position feedback	4 to 20 mA 0 to 20 mA 0 to 1 V 0 to 5 V Slidewire 250 to 1250 ohms Slidewire < 250 ohms Slidewire 1250 to 4000 ohms* Slidewire 4000 to 6500 ohms* *Version 4.1 or later.
FORWARD RELAY OUTPUT			
Parameter	**Rack #**	**Parameter Description**	**Value or Selection**
Rack Address	1	This is the address of the selected Rack.	1 to 12.
I/O Module Address		Address of selected I/O module	1 to 12
Channel Address *Table continued*		Channel on selected I/O Module	Odd number 1 thru 15.*

REVERSE RELAY OUTPUT (Read Only) (This is configured automatically when Forward Relay Output is configured)			
Rack Address	2	This is the address of the selected Rack.	Same as Forward
I/O Module Address		Address of selected I/O module	Same as Forward
Channel Address		Channel on selected I/O Module	Forward Channel +1 Even number 2 thru 16.*
FEEDBACK INPUT			
Rack Address	N/A	This is the address of the selected Rack.	1 to 12.
I/O Module Address		Address of selected I/O module	1 to 12
Channel Address		Channel on selected I/O Module	1 to 16*
*For ControlEdge HC900 controller's 32 Channel DO Module, outputs 17 through 32 may not be used for TPO (Time Proportioning Output), PPO (Position Proportioning Output) or TPSC (Three Position Step Output) output types.			

Example

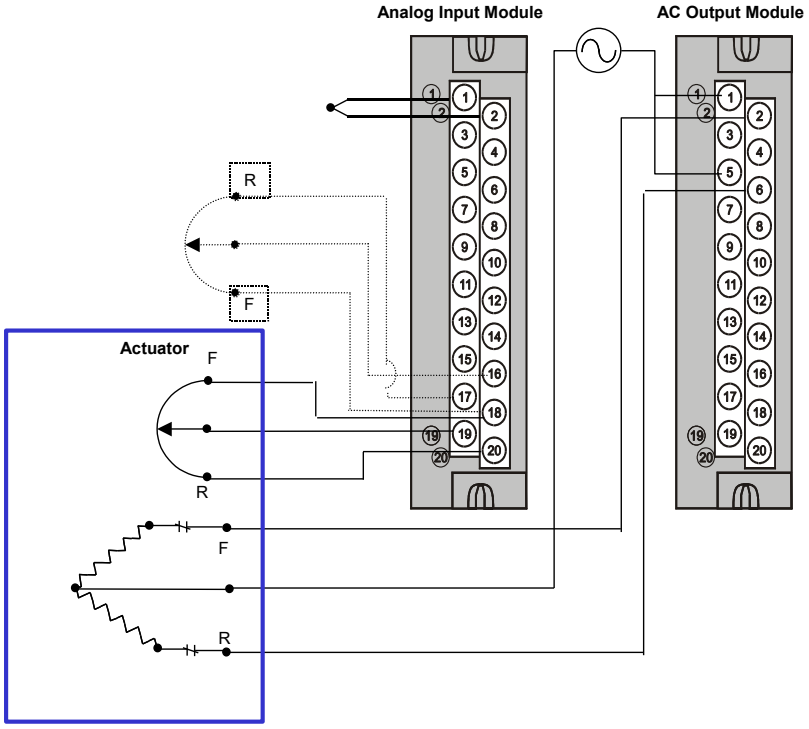

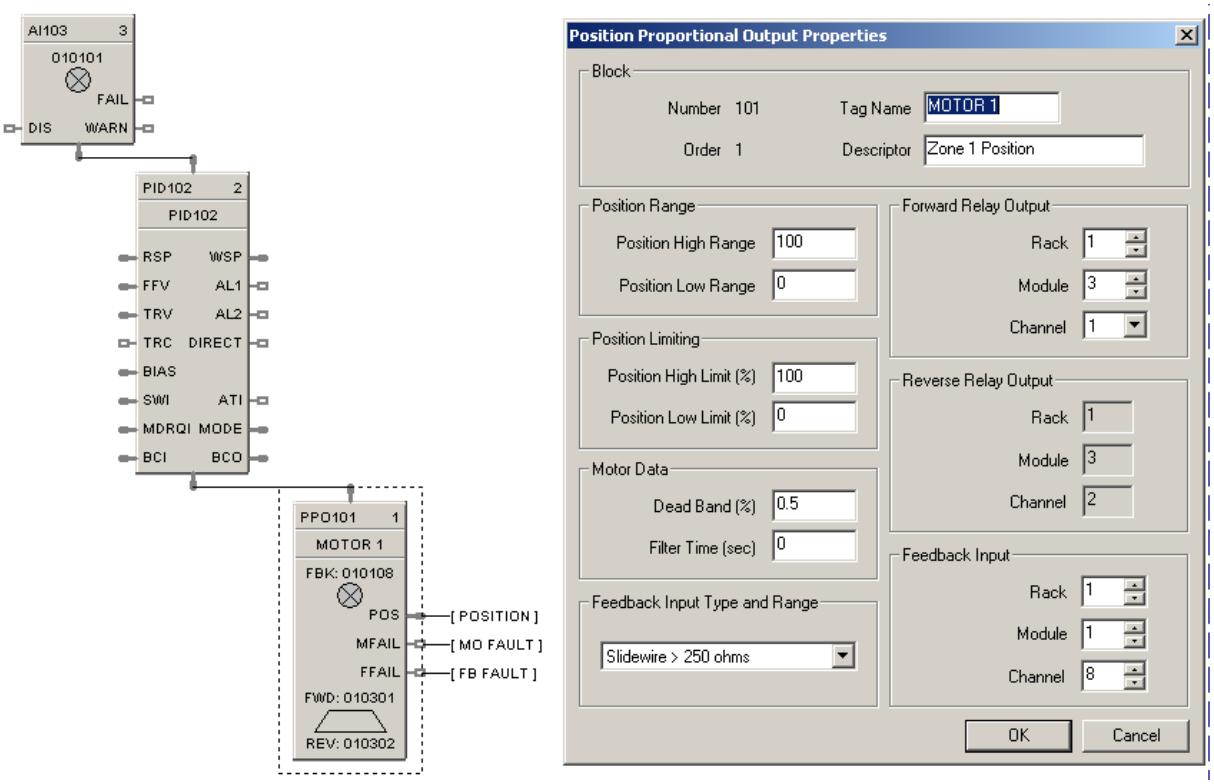

Figure 80 Position Proportional Motor Control

PSYC Psychrometric Calculations Function Block

Description

The **PSYC** label stands for Psychrometric Calculations. This block is part of the *HVAC* category.

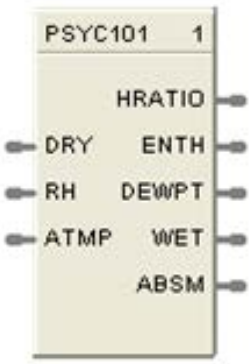

Function

This block calculates the Humidity Ratio, Enthalpy, Dew point temperature, Wet bulb temperature and Absolute Moisture based on the input Dry bulb temperature (DRY), Relative Humidity (RH) and Atmospheric Pressure (ATMP). A single configurable parameter specifies if inputs and outputs use metric system units.

ATTENTION

The wet bulb temperature output is updated only once for every three executions of the block.

Inputs

DRY = Dry bulb air temperature – Range: -40 – 140 degrees F or -40 – 60 degrees C

RH = Air relative humidity – Range: 1.0 – 99.9% RH.

ATMP = Barometric Pressure – Range: 12.5 – 15.7 psi. or 861.84 – 1082.47 millibars. When this pin is not connected the calculations use a default value of 14.696 psi. or 1,013.25 millibars.

Note: If any of the above inputs are outside of the specified ranges, they are set to the upper or lower range as appropriate.

Outputs

HRATIO = Humidity Ratio – lb/lb or kg/kg

ENTH = Enthalpy – btu/lb or kJ/kg

DEWPT = Dew point temperature – degrees F or degrees C

WET = Wet bulb temperature – degrees F or degrees C

ABSM = Absolute moisture – gr/lb or gr/kg (Grains/Pound or Grains/Kilograms)
aka: Mixing Ratio
Note: To convert from Grains to Grams, multiply with 0.0647.

Block properties

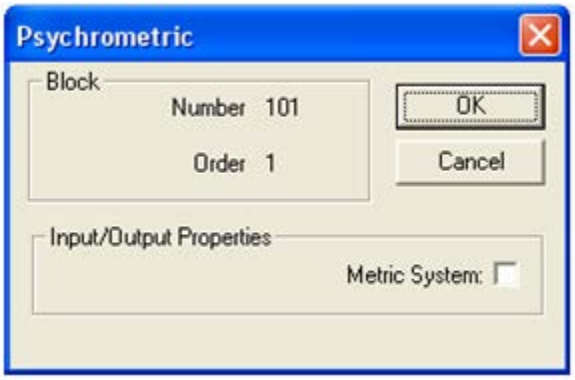

Double click on the function block to access the function block properties dialog box.

Configuration parameters

Table 91 PSYC function block configuration parameters

Properties Group	Parameter	Index #	Parameter Description	Value or Selection
Block	**Block Order**	N/A		Read Only. To change block order, right-click on a Function Block and select Execution Order.
Input/Output	**Metric System**	N/A	Selects if the metric system is used for inputs and outputs	Click on the check box when the metric system is being used.

Example

Calculate humidity ratio, enthalpy, dew point temperature, wet bulb temperature and absolute moisture content of air as a function of air temperature, relative air humidity, and atmospheric pressure.

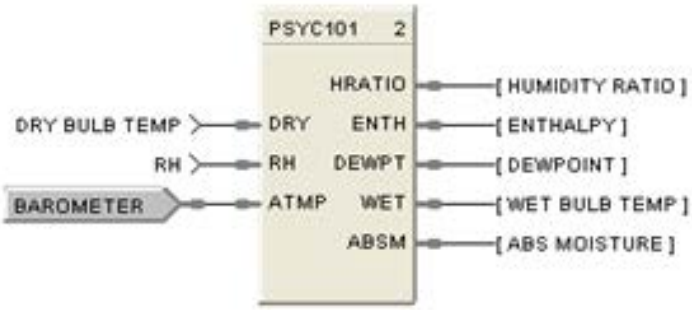

Figure 81 PSYC function block example

PTMR Periodic Timer Function Block

Description

The **PTMR** label stands for **Periodic Timer**.

OR

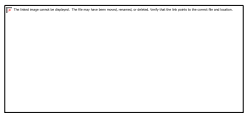

This block is part of *Logic* and *Fast Logic* categories.

Function (1 or 2)

4. *Time/Cycle:* Generates a discrete output pulse at a specified start time based on the real-time clock and at specified time periods thereafter.
   Start Times = Month, Day, Hour, Minute, Second
   Cycle Periods = Monthly, Weekly, Daily
   Time Cycle Periods Within a Day = Hours (0-23) Minutes (0-59) Seconds (0-59)
   NOTE: Once started, period repeats until reset.

5. *Reset Cycle:* Generates a digital output based on a digital input and at regular intervals thereafter.
   Time Start = ON to OFF transition of reset input.
   Cycle Time Period = Hours (0-23) Minutes (0-59) Seconds (0-59)

Input

RST = Reset/Enable (ON = Output disable, OFF = Output enable)

Output

EVENT= OUT Logic State. Output turns ON for one scan cycle when elapsed time matches setpoint time (One-shot).

Block properties

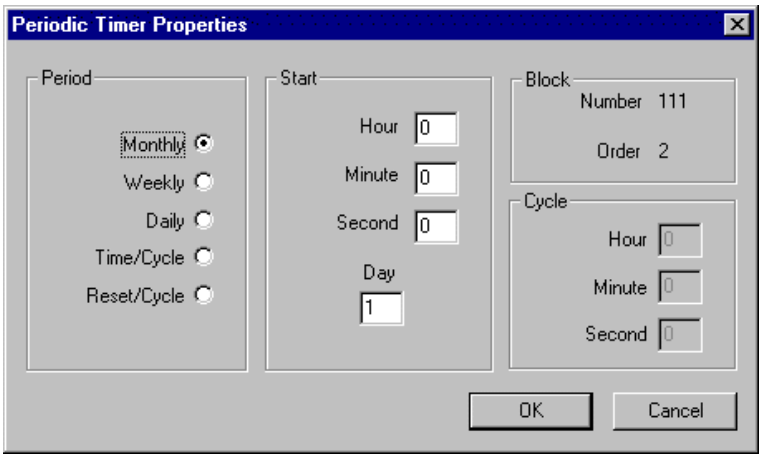

Double click on the function block to access the function block properties dialog box.

Configuration parameters

Table 92 PT function block configuration parameters

Properties Group	Parameter	Index #	Parameter Description	Value or Selection
Block	**Block Order**	N/A		Read Only. To change block order, right-click on a Function Block and select Execution Order.
Period	**Monthly**	N/A	Output turns ON once a month for one scan cycle. If the current month's last day is less than 31 it will turn ON on the last day of the month. Reset/Enable: ON = Hold off output OFF = Run	Enter ***START*** - **Day** (Days >31 = 31), **Hour, Minute, Seconds**
	Weekly	N/A	Output turns ON once a week for one scan cycle. Reset/Enable: ON = Hold off output OFF = Run	Enter at ***START*** - **Day** (Monday through Sunday), **Hour, Minute, Seconds**
	Daily	N/A	Output turns ON once a day for one scan cycle. Reset/Enable: ON = Hold off output OFF = Run	Enter at ***START*** - **Hour, Minute, Seconds**
	Time/Cycle	N/A	Timer starts at a specific time of day then output pulses on/off on a time interval. Once started, start time is ignored until reset. Reset Input: ON = stops cycle and holds off start OFF = enables start time	Enter at ***START*** - **Hour, Minute, Seconds** Enter at *CYCLE* - Hour, Minute, Second
	Reset/Cycle	N/A	Timer starts on an ON (1) to OFF (0) transition of the reset input, then output pulses on/off on a time interval. Once started, the cycle continues until the reset turns on. Reset Input: ON = stops cycle and holds off start OFF = Output turns ON for one scan cycle at ON to OFF transition and cycle begins.	Enter at ***CYCLE*** - **Hour, Minute, Second**

Properties Group	Parameter	Index #	Parameter Description	Value or Selection
Start	**Hour**	N/A	Start Hour	0 through 23
	Minute	N/A	Start Minute	0 through 59
	Second	N/A	Start Second	0 through 59
	Day	N/A	Start Day	**Monthly** - 1 - 31 (Days >31 = 31) If the current month's last day is less than 31 it will turn ON on the last day of the month. **Weekly** -Monday through Sunday
Cycle	**Hour**	N/A	Cycle Hour	0 through 23
	Minute	N/A	Cycle Minutes	0 through 59
	Second	N/A	Cycle Seconds	0 through 59

Example

Figure 82 shows a Function Block Diagram using a PT function block.
An OFF delay timer block output is ON as long as the RST input is logic HI (ON). It can be used for time duration but must be triggered by an ON to OFF transition on the Reset input. This can be accomplished using Trigger blocks (TRIG) to create one-shot pulses which last one scan cycle. The fast logic trigger pulse will last 100 ms. while the normal logic trigger pulse will last the complete scan cycle for analog blocks. Use according to application need. A **Periodic Timer (PT)** output pulse may also be used to start the timer for the OFF delay for time duration.

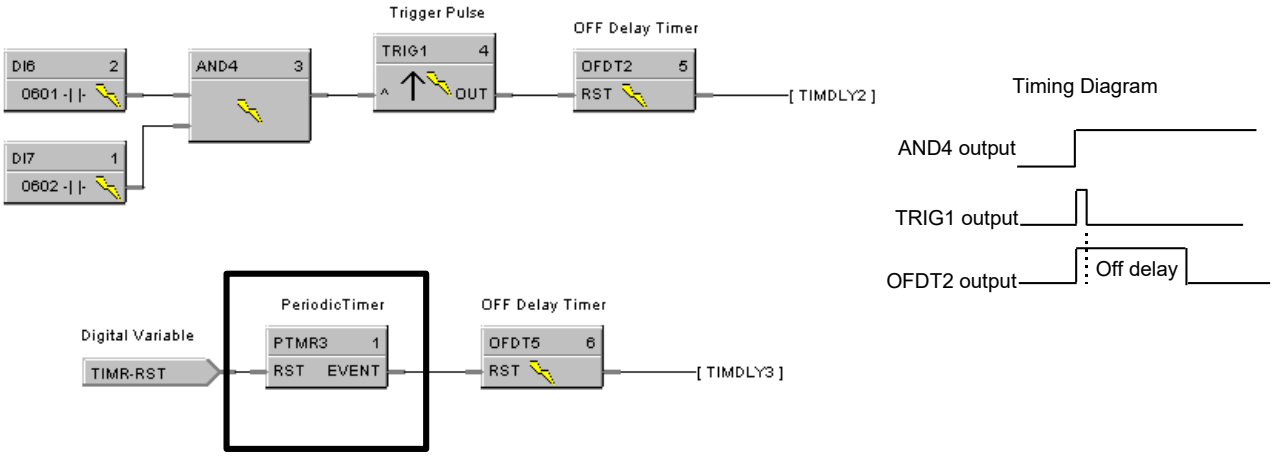

Figure 82 PT function block example

QDT Quadrature Function Block

Description

The QDT stands for Quadrature.

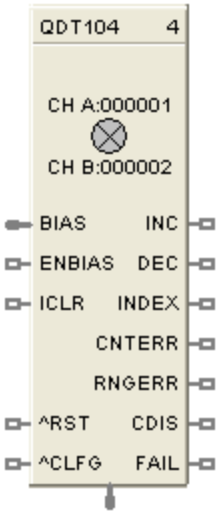

This block is part of the *I/O Blocks* category.

Function

This function block measures/controls movement of an actuated device. A digital encoder connected to the actuated device produces two channels (A and B) of square waves, offset 90 degrees. Quadrature refers to the 4 logic states between these two waves. The rising edge to rising edge (cycle) on channel A or B indicates that one set of bars on the encoder have passed by its optical sensor. By counting these passing rising edges the Quadrature block measures

1) distance (or whatever engineering units are being controlled by the device),

2) position (that is, distance from a marker designated as zero),

3) direction (indicated by the sequence between the two channels; A leads B or B leads A).

More precise measurement/control is done by counting more logic states determined by the two waves. For example, the quadrature state of channels A and B create four unique logic states. When these four unique logic states are decoded, the resolution obtained is 4 times (4X) the resolution of the encoder. So with this in mind 250 cycles would yield 1000 quadrature states.

Inputs

BIAS = Value added to the output in EU.

ENBIAS = Enable Bias. When ON the bias is added to the output. Input is ignored if not connected and default state is enabled.

ICLR = Index Clear Enable. When this is ON it enables the module's Index input so that the first OFF to ON transition of Index input resets the output to zero (plus bias, if enabled).

^RST = OFF to ON transition resets the output to zero (plus bias, if enabled).

^CLFG = OFF to ON transition clears the CNTERR and RNGERR flags to zero.

Outputs

INC = ON when count is incrementing; OFF when count is stopped or decrementing.

DEC = ON when count is decrementing; OFF when count is stopped or incrementing.

INDEX = ON when index pulse is detected and ICLR are asserted.

CNTERR = ON when the count on the module overflows or underflows.

RNGERR = ON when the count on the module surpasses the range limits.

CDIS = ON when the PFQ module detects a cable disconnect.

FAIL = ON when module is failed. Caused by INC and DEC both ON.

OUT = Count in EUs.

Notes

To ensure correct counting, the block counts only pulses of a certain wavelength (>2.25 uS); smaller pulses caused by noise are rejected. Additionally only a single transition of Channel A (Input 1) and Channel B (Input 2) may occur; a transition on both channels simultaneously cases an invalid count.

Configuration Parameters

Table 93 QDT parameters

Properties Group	Parameter	Index #	Parameter Description	Value or Selection
Block	**Order**	N/A	Execution Order for Block	Read Only. To change block order, right-click on a Function Block and select Execution Order.
Input A Address	**Rack**	0	This is the address of the selected Rack.	Enter a value: from 1 to 5.
	Module	0	Slot location of the PFQ module	Enter a value: from 1 to 12
	Channel	0	Channel A on the PFQ Module	1 (not selectable)
Input B Address	**Rack**	0	This is the address of the selected Rack.	Automatically set to same as Input A.
	Module	0	Slot location of the PFQ module	Automatically set to same as Input A.
	Channel	0	Channel B on the PFQ Module	2 (not selectable)
Encoder Range	**Pulses per EU**	1	Number of pulses per EU of the variable being measured/counted. Be sure to factor in your Quadrature Mode setting (X1, X2, X4).	Enter a value.
	Upper Range Limit	3	Upper range limit of EU.	Enter a value.
	Lower Range Limit	4	Lower range limit of EU.	Enter a value.

Properties Group	Parameter	Index #	Parameter Description	Value or Selection
Control Configuration	**Quadrature Mode**	2	Resolution of counter. The quadrature code produced by encoders has 4 state changes (edges) per quadrature cycle (one per ¼ cycle). A 250 CPR encoder has 250 cycles, (1000 pulses) per revolution. X1 decoding means that the external electronics pulses once per full cycle. X2 pulses twice per cycle. X4 pulses every quadrature state.	X1: One pulse per cycle X2: Two pulses per cycle X4: Four pulses per cycle
Failsafe	**Use Value**	5	When FAIL is ON output is set to this value.	Click to select, enter a value.
	Up scale	6	When FAIL is ON output is set to Upper Range Limit.	Click to select.
	Down scale	6	When FAIL is ON output is set to Lower Range Limit.	Click to select.
	HOLD	6	When FAIL is ON output is held.	Click to select.

Example

Quadrature Function used to measure the output of an encoder to determine the position of a traversing process.

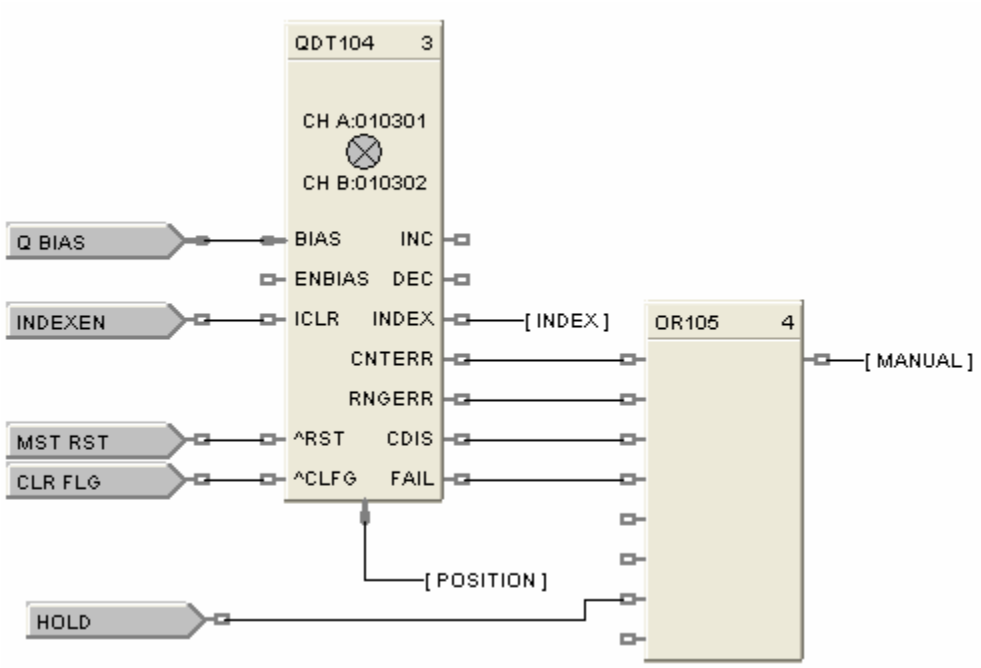

Figure 83 Quadrature function block example

RAI Function Block

Description

The RAI label stands for Analog Input with Remote C/J.

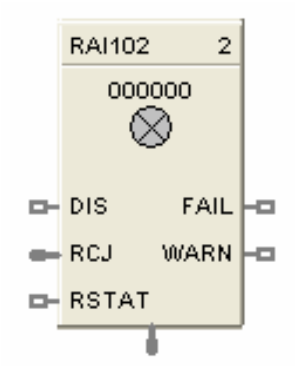

This block is part of the *I/O Blocks* category.

Function

This block is used only for Thermocouples when the thermocouple Cold Junction is in a remote location, i.e., NOT connected at the AI module. Cold Junction compensation is performed using the value presented at the RCJ input, which is a temperature value in degrees C of the remote junction and which will come from another AI block. CJ compensation and linearization is performed in the block producing a value in engineering units at the OUT pin. Fail status of the AI block measuring the Remote CJ can be applied to the RSTAT pin. (i.e. if the RCJ measurement Fails, the Thermocouple measurement fails)

Input

Analog value from specified real I/O address.
DIS = disable the AI channel
RCJ = Remote CJ Value - This would come from an AI block Output.
RSTAT = Remote CJ Status - This would come from the AI block Fail Pin.

Output

OUT = Analog Input value in engineering units.
WARN = Warning Input Indication - Sensor failure possibility. If AI input wiring or sensor exceeds 100 ohms of resistance, the WARNing pin will energize. There also will be a warning if the value of RCJ is outside the limits -30 to +90 C
FAIL = Digital status of channel
Digital Low (0) = OK
Digital High (1) = Open sensor or failed input channel or RSTAT input is ON indicating a Failed RCJ AI block

Configuration parameters

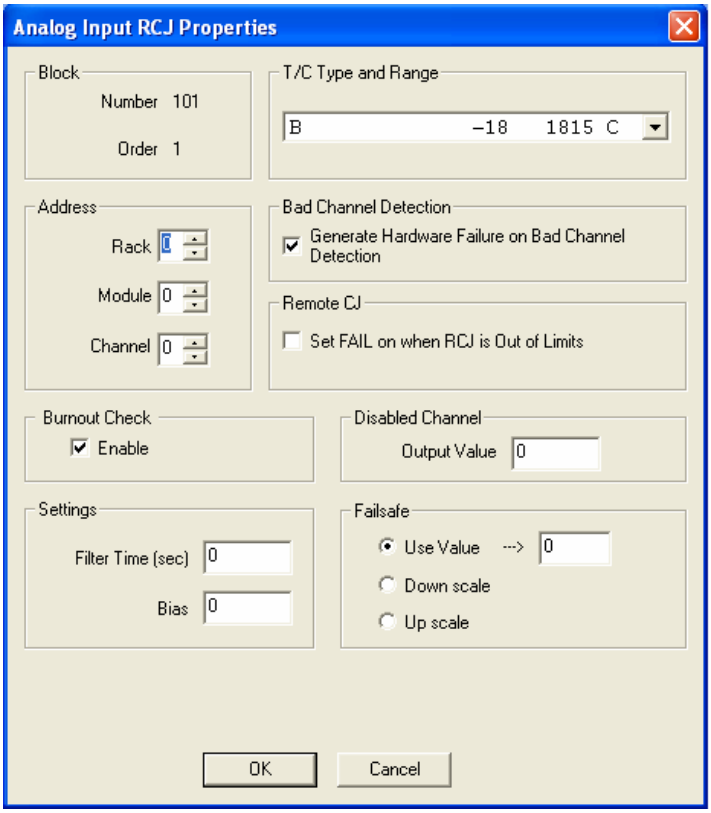

Table 94 Analog Input with Remote C/J configuration parameters

Parameter	Index #	Parameter Description	Value or Selection
Block Order	N/A	Execution Order for Block	Read Only. To change block order, right-click on a Function Block and select Execution Order.
Rack Address		This is the address of the selected Rack.	Enter a value from 1 to 12.
I/O Module Address		Address of selected I/O module	Enter a value: from 1 to 12
Channel Address		Channel on selected I/O Module	Enter a value: from 1 to 8 or 16.
T/C Type and Range	N/A	Thermocouple Input types	Select an input from list box. See Table 95 for Input Type and Range

Parameter	Index #	Parameter Description	Value or Selection
Bad Channel Detection	N/A	Check this to generate a hardware failure diagnostic if a bad AI channel is detected. If unchecked, a diagnostic will not be generated, which may be desirable for inputs used for monitoring only.	Click on block to select or deselect
Remote C/J	N/A	Set FAIL pin ON if RCJ value outside limits (-30 to 90 ºC)	Click on block to select or deselect
Disable Channel Output Value	8	The output value when the AI channel is disabled. Disable = ON	Enter a value Default = 0
Filter Time (sec)	2	A software digital filter is provided for the input designated to smooth the input. You can configure the first order lag time constant from 1 to 120 seconds. 0=no filter	Enter a value: 0 to 120 seconds
Bias	3	Bias is used to compensate the input for drift of an input value due to deterioration of a sensor, or some other cause.	Enter a value: -99999 to 99999
Failsafe Use Value	N/A	Use the User value entered in the appropriate field.	Click on Radio button to select.
Failsafe Use Value field	4	The output value to which the output will go to protect against the effects of failure of the equipment, such as, fuel shut-off if there is loss of flame in a furnace, or a sensor break.	Enter a value in Engineering Units -99999 to 99999
Downscale	N/A	OUT = Value of Low range implied by T/C input type.	Click on Radio button to select
Upscale		OUT = Value of High range implied by T/C input type.	Click on Radio button to select
Burnout Check	N/A	Burnout check enable	Click on block to select or deselect

Failsafe rules

If the controller is unable to access the physical channel or the sensor is faulty, and:

- If Failsafe is “Use Value” Then OUT = Configured Failsafe value
- If Failsafe is enabled and downscale Then OUT = Low Range Value of T/C input type
- If Failsafe is enabled and upscale Then OUT = High Range Value of T/C input type

Table 95 ControlEdge HC900 Input Types and Ranges for RAI Function Block

Enum	Type	Range Low	Range High	EU
0	None			
	B	-18	1815	C
	B	0	3300	F
	E	-270	1000	C
	E	-454	1832	F
	E	-129	593	C
	E	-200	1100	F
	J	-18	871	C
	J	0	1600	F
	J	-7	410	C
	J	20	770	F
	K	-18	1316	C
	K	0	2400	F
	K	-18	982	C
	K	0	1800	F
	K	-29	538	C
	K	-20	1000	F
	Ni-NiMo	0	1371	C
	Ni-NiMo	32	2500	F
	Ni-NiMo	0	682	C
	Ni-NiMo	32	1260	F
	NiMo-NiCo	0	1371	C
	NiMo-NiCo	32	2500	F
	NiMo-NiCo	0	682	C
	NiMo-NiCo	32	1260	F
	NiCroSil-NiSil	-18	1300	C
	NiCroSil-NiSil	0	2372	F
	NiCroSil-NiSil	-18	800	C
	NiCroSil-NiSil	0	1472	F
	R	-18	1704	C

Enum	Type	Range Low	Range High	EU
	R	0	3100	F
	S	-18	1704	C
	S	0	3100	F
	T	-184	371	C
	T	-300	700	F
	T	-129	260	C
	T	-200	500	F
	W_W26	-20	2320	C
	W_W26	-4	4200	F
	W5W26	-18	2316	C
	W5W26	0	4200	F
	W5W26	-18	1227	C
	W5W26	0	2240	F

Example

Figure 84 shows a Function Block Diagram configuration using an RAI function block.

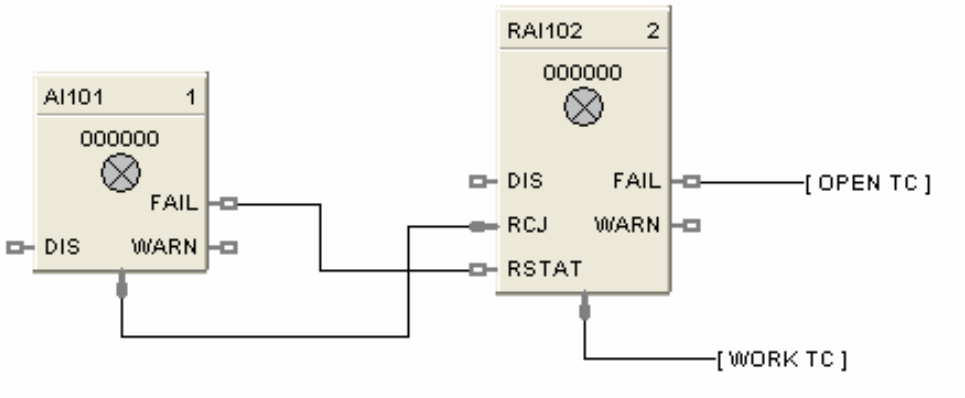

RAI used for work temperature monitoring. Tag descriptors are used to identify the input. A digital tag connected to the fail output can alarm on an open sensor.

Figure 84 RAI function block example

RACK Function Block

Description

The RACK label stands for IO Rack Monitor.

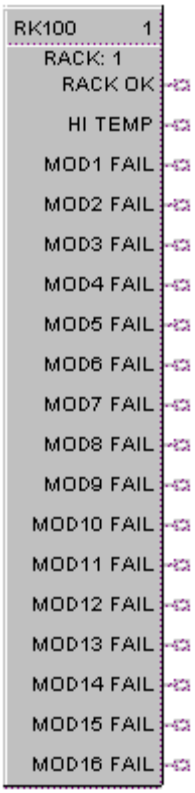

This block is part of the *Alarms/Monitor* category.

Function

The rack monitor block is a repository for controller/expansion rack I/O module information, including diagnostics.

The Rack function block provides Read/Write access to I/O Rack values. This block is always stored in the reserved block area (96 thru 100), are always in the configuration whether visible in the FBD or not. The total number is dependent on the controller type.

Each Rack monitor block has a unique identification number that is fixed for all configurations. The Rack number appears on the function block. The Number is specified as:

1 = Rack #1 (Main Rack)
2 = Rack #2 (Expansion Rack)
3 = Rack #3 (Expansion Rack)
4 = Rack #4 (Expansion Rack)
5 = Rack #5 (Expansion Rack)

Right Click on Block icon to Monitor Block diagnostics.

Outputs

RACK OK = On indicates Rack other than Good
(Refer to Rack Diagnostics - Controller Diagnostics Status Indications in the ***Process Control*** Designer User Guide for Fault diagnostics)

HITEMP = On indicates High RJ Temperature detected on AI board
(Refer to Expansion I/O Comm Diagnostics - Expansion I/O Comm Diagnostics Status Indications in the ***Process Control*** Designer User Guide for Fault diagnostics)

MODxx FAIL = On indicates Module other than Good.
(I/O Module Diagnostics - I/O Module Diagnostics Status Indications in the ***Process Control*** Designer User Guide for Fault diagnostics)

The Status Indications will list the Error Status, possible causes of failure, controller actions, and User action to remove failure.

Example

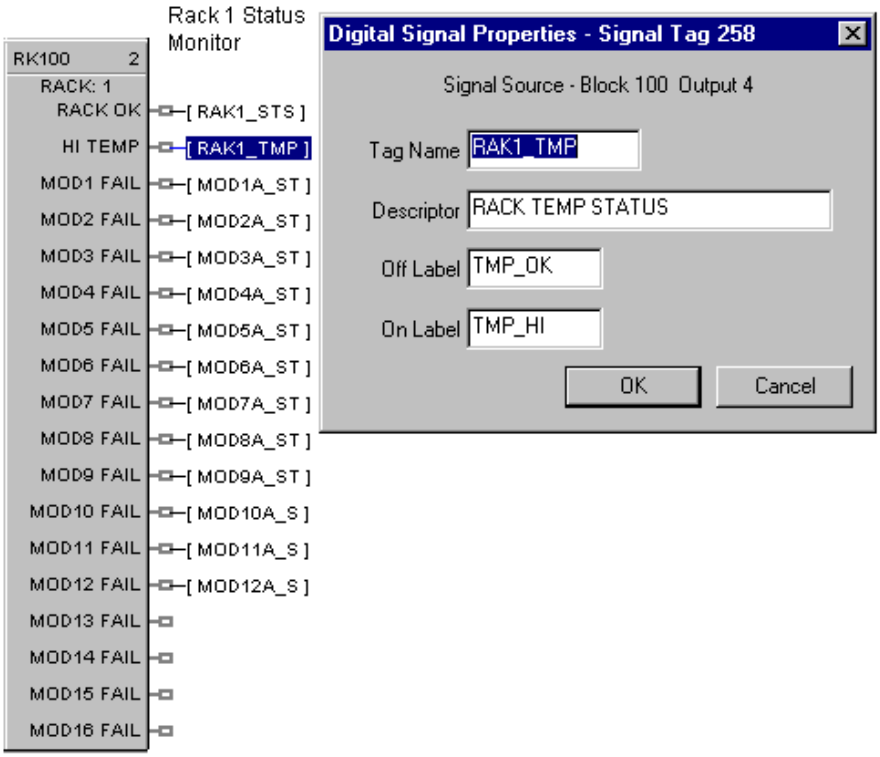

Figure 85 Rack Monitor function block example

RAMP Function Block

Description

The **RAMP** label stands for **Ramp**.

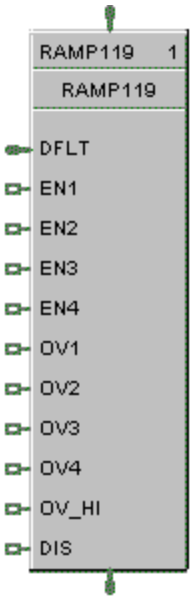

This block is part of the *Auxiliary* category.

Function

The **RAMP** function block is typically used for variable speed, valve position, and chemical feed control applications to reduce the output value as more external devices are enabled.
For example: If one pump is running at 100 % and a second pump is enabled, the output value may be rescaled to 50 % by the pump 2 enable signal.
The ramp block references an analog signal, and using four separate scales multiplexed together, provides a single analog output over a programmed range.

A configurable signal lag [LAG TIME] is applied to the referenced analog input (PV). The highest enabled scale [EN1-EN4] is applied to the lagged PV value. The output of the selected scale is then the output of the function block [OUT].

A bumpless analog transfer over time is applied when switching between the selected scales. If no scales are selected, then the default input value [DFLT] is written to the output.

If the block is disabled, the user configured [Off Value] is written to the output.

Turning ON an override input [OV1-OV4] sets its output (prior to multiplexing) high or low depending on the state of the override input high [OV HI – *On or Off*].

The general forcing of outputs is permitted within this block. Ramping and Clamping will not apply to the output if it is forced.

Inputs

IN = PV Input (Analog input signal).

DFLT = The Output is set to this value if no ramps are enabled. It typically comes from another Ramp block, thus allowing ramps to be stacked together.

EN [1-4] = Enables or disables the associated scale.

OV [1-4] = When ON, overrides the output of the associated scale to the high or low limit value depending on the state of OV HI.

OV HI = determines the limit value of the selected scale when it is overridden. ON=override high, OFF=override low

DIS = Normally OFF. If ON, then OUT = the configured Off-Value

Output

OUT = **Enabled** = the scale/ramp output, **Disabled** = the user configured Off-Value

Scale Limits
PV input values that are outside of the input low limit and input high limit settings are not processed. The output value is clamped based on the input limits. The input low and high limits may be inverted, (for example: input low limit > input high limit) to reverse scale the output.

Block properties

The **Ramp** properties dialog box is divided into FIVE tab cards:

GENERAL
RAMP 1
RAMP 2
RAMP 3
RAMP 4

Click on the tab to access the properties for that tab.

GENERAL tab

It looks like this graphically.

Table 96 describes the parameters and the value or selection.

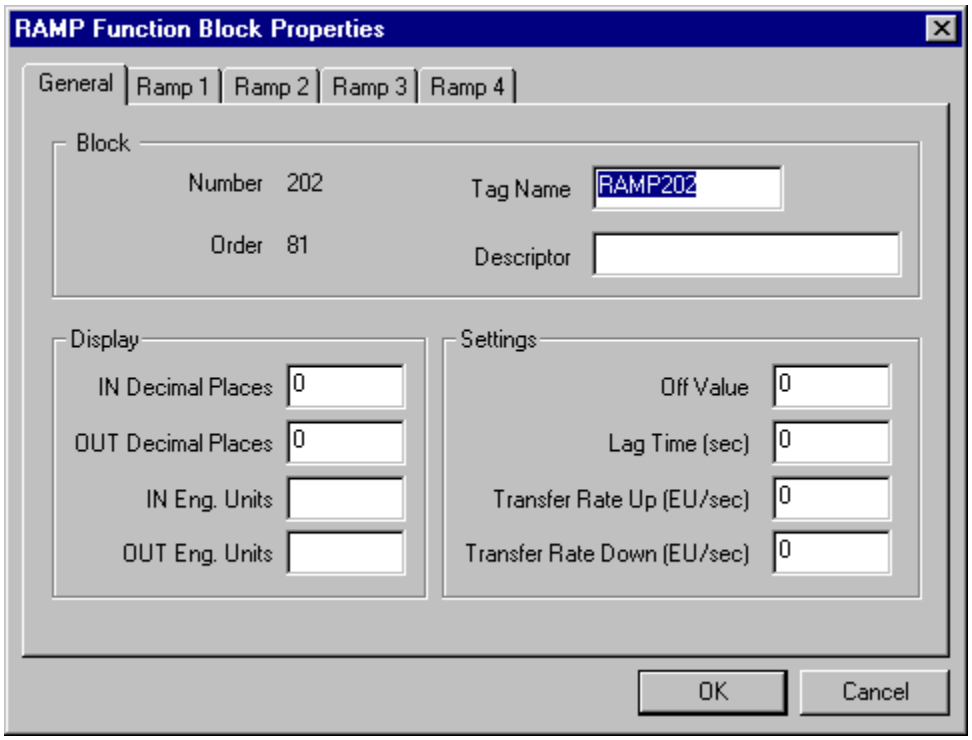

Table 96 RAMP general tab parameters

Properties Group	Parameter	Index #	Parameter Description	Value or Selection
General	**Tag Name**	N/A	32-characters unique tag name (ASCII characters only)	Up to 32-characters
	Descriptor	N/A	Block description	Up to 32-characters (ASCII characters only)
Display	**IN Decimal Places**	N/A	Parameter Decimal Places shown on the operator Interface for the Input and Input Limit.	Range 0 to 5 Enter selection in field
	OUT Decimal Places	N/A	Parameter Decimal Places shown on the operator Interface for the Output and Output Scale Limit.	Range 0 to 5 Enter selection in field
	IN Engr. Units	N/A	PV Engineering Units for Operator Interface. Also applies to Input Limit parameters.	Four characters maximum Enter characters in field
	OUT Engr. Units	N/A	Output Engineering Units for Operator Interface. Also applies to Output Scale Limit parameters.	Four characters maximum Enter characters in field
Settings	**Off Value**	16	Value written to OUT when the scale is disabled. If no scales are selected, then the default Input value [DFLT] is the output.	Within the Output Limits
	Lag Time (Sec)	19	Lag Time Constant	Range: 0.0 to 120.0 seconds. 0=no lag
	Transfer Rate Up (EU sec)	17	Transfer Rate in Engineering Units/second when switching to a **higher** value (bumpless analog transfer).	Range: 0-99999 EU/sec
	Transfer Rate Down (EU sec)	18	Transfer Rate in Engineering Units/second when switching to a **lower** value (bumpless analog transfer).	Range: 0-99999 EU/sec

RAMP tabs

It looks like this graphically. There are four ramp tabs, each with the same entry fields. Select the tab for each ramp at the top of the dialog box.

Table 97 describes the parameters and the value or selection for each ramp.

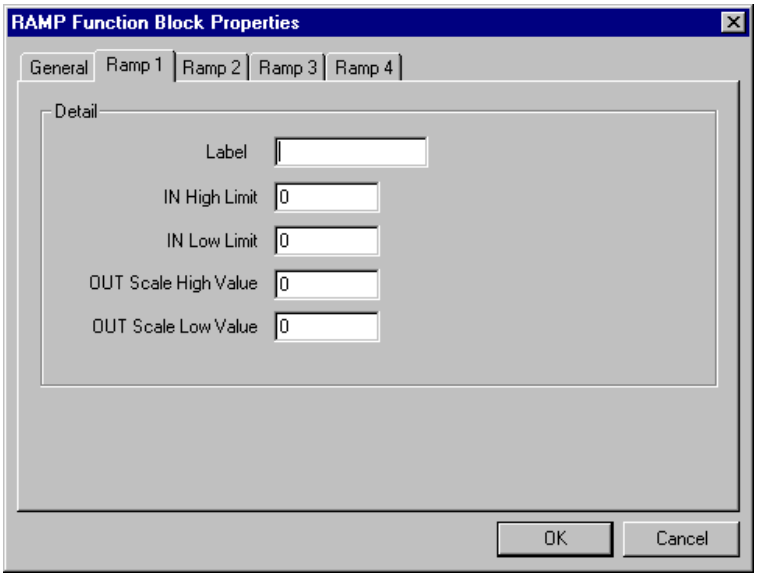

Table 97 RAMP tabs parameters

Properties Group	Parameter	Index #	Parameter Description	Value or Selection
Detail **(for each Ramp # tab)**	**Label**	N/A	Unique name for each of the 4 internal Ramp functions.	8 Characters
	IN High Limit	8 through 11	Input HIGH Limit value applied to the PV after signal lag.	Within the PV range limits
	IN Low Limit	12 through 15	Input LOW Limit value applied to the PV after signal lag.	Within the PV range limits
	OUT Scale High Value	0 through 3	High output limit after rescale.	Within the PV range limits
	OUT Scale Low Value	4 through 7	Low output limit after rescale.	Within the PV range limits

Example

Figure 86 shows a function block diagram using RAMP function blocks. In the example, if Stage 3 is ON and all others are OFF, the output to the device will equal to the third scale of Ramp 1. If Stages 3 and 8 are ON, then the output to the device will equal the fourth scale of Ramp #2.

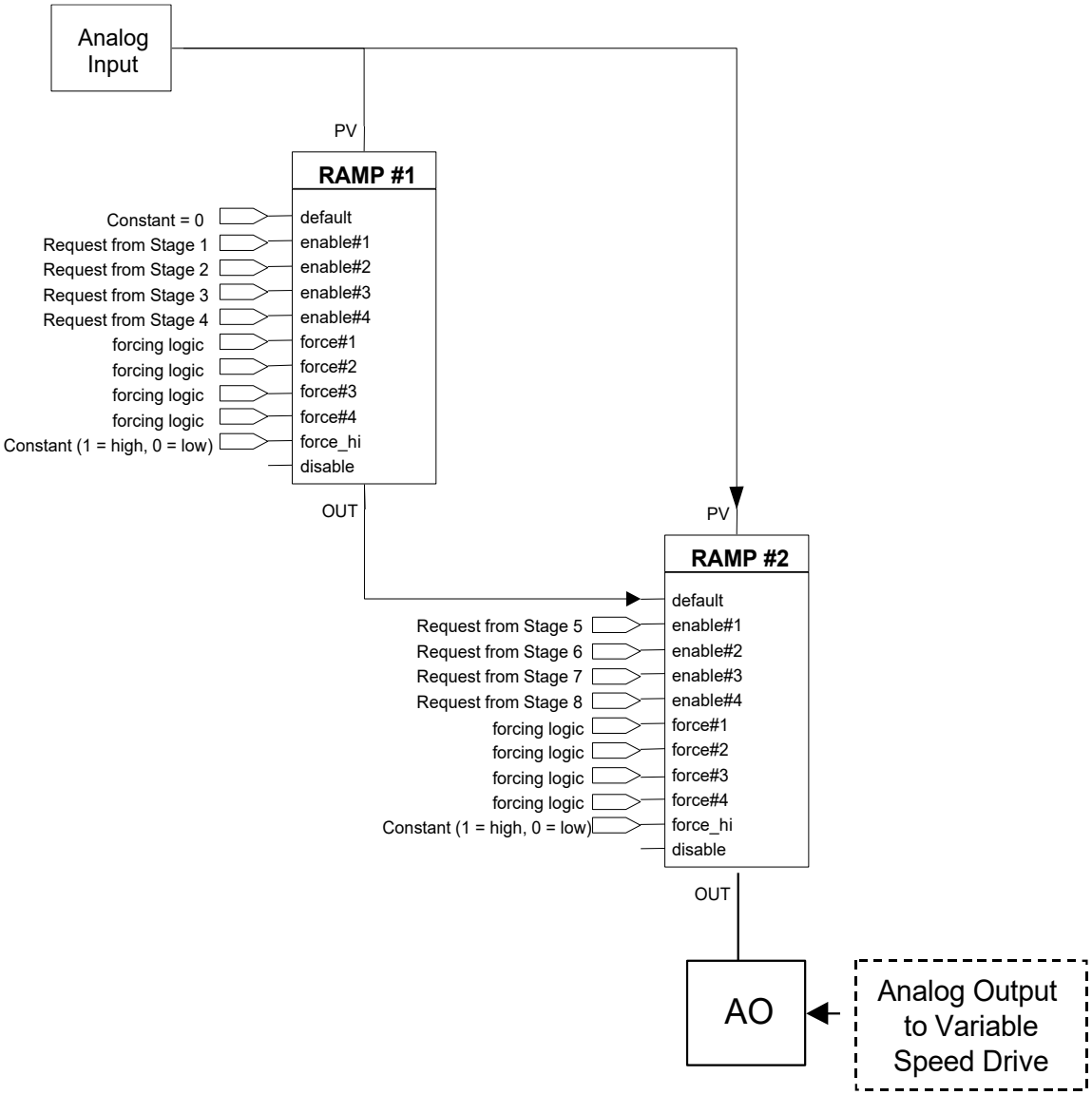

Figure 86 RAMP function block example

RCON Read Constant Function Block

Description

The **RCON** label stands for **Read Constant Parameter Data**. This block is part of the *Auxiliary* category.

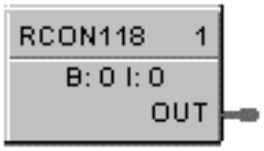

This block is part of the *Auxiliary* category.

Function

Reads the numerical value of selected configuration parameter in a given function block**.**

Select the index number of the required parameter from the specific function block reference data and enter it in the appropriate field in the “Read Constant Properties” dialog box.

The Block (B:) number and the Index (I:) number will appear on the block icon.

Output

OUT = Analog value of parameter

Block properties

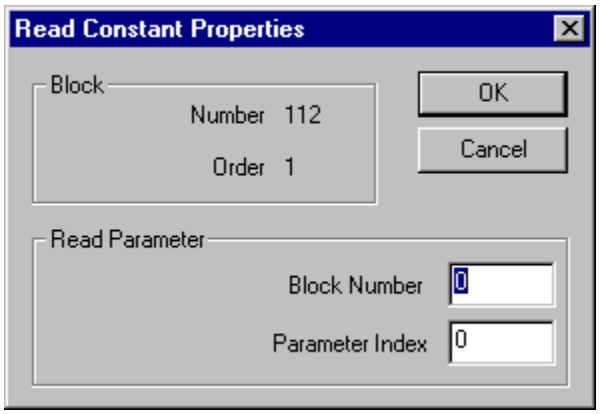

Double click on the function block to access the function block properties dialog box.

Configuration parameters

Table 98 Read constant configuration data

Properties Group	Parameter	Index #	Parameter Description	Value or Selection
Read Parameters	**Block Number**	N/A	Number of control block that contains desired configuration parameter. Note: In the SIL configuration, if the RCON block is on the Safety worksheet, only the block number is valid for entry for such blocks.	101 to 500(Model C30) 101 to 2100(Model C50) 101 to 5100 (Model C70/C75)
	Parameter Index	N/A	Index number of configuration parameter to be read.	Select the index number of the required parameter from the specific function block reference data

The block number and parameter index# will appear on the front of the RCON function Block.
Example - B:223 I:3

TIP

The main purpose of this control block is to make a block configuration parameter (constant) available for display. To do this, you must enter the corresponding parameter index number for the selected configuration parameter. ***Select the index number of the required parameter from the specific function block reference data and enter it in the appropriate field in the "Read Constant Properties" dialog box.***

RCON Example

Figure 87 shows a Function Block Diagram using the RCON function block.

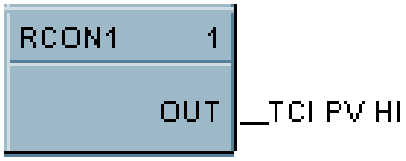

ATTENTION

The process variable High Range Value for a PID block (Index #4) may be displayed at the Operator Panel with the Analog Signal Tag name TC1 PV HI, and/or the process variable may be used as an input to another control block.

Figure 87 RCON function block example

RCP Recipe Selector Function Block

Description

The **RCP** label stands for **Recipe Selector**.

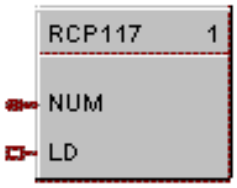

This block is part of the *Setpoint Program* category.

Function

Used to initiate loading of recipe values into a chosen set of controller variables. Inputs include recipe number and load command. Loads numbered RECIPE (NUM) when digital signal (LD) is ON into the various blocks of the controller.

- If LD = OFF to ON, then: Recipe numbered (NUM) is loaded in place of the current set of variable values.

Input

NUM = Recipe number (1-50).

LD = Load recipe - OFF to ON will load the recipe.

TIP

The recipe is loaded at the time of block execution. If using multiple RECIPE blocks, they may counteract. Also, use the lowest execution numbers.

Block properties

Double click on the function block to access the function block properties dialog box.

ATTENTION

The recipe is loaded while the LD signal is on. It is not a one time load, it is a continuous load while the LD signal is on.

If the OI operator attempts to change a variable value (done by means of the Variable Edit display on the OI), the operator's changes will immediately be overwritten by the loading recipe since it also contains the variable.

To correct this problem, configure a one-shot trigger signal between LD and its signal. This will cause LD to go on for one scan cycle instead of staying on.

Example

Figure 88 shows a Function Block Diagram using an RCP function block. The BCD block selects a recipe number and the RCP block loads the recipe in place of the current set of recipe variables.

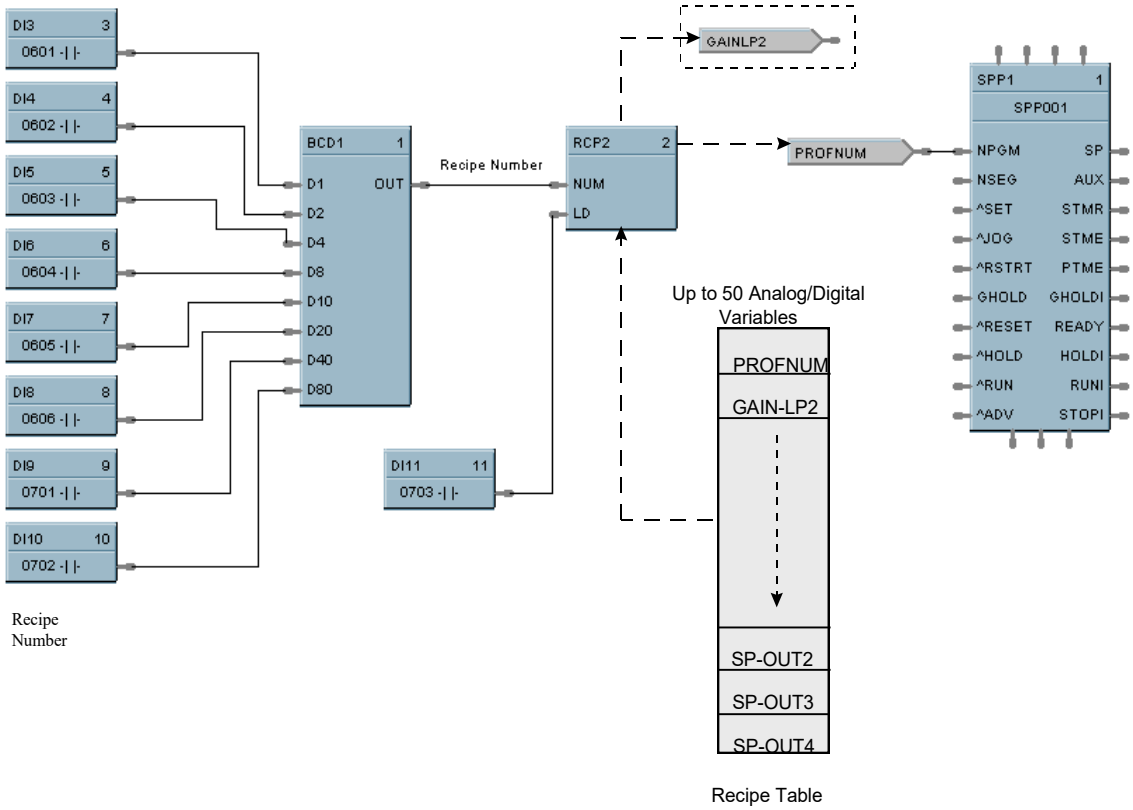

Figure 88 RCP function block example

RH Relative Humidity Function Block

Description

The **RH** label stands for **Relative Humidity**.

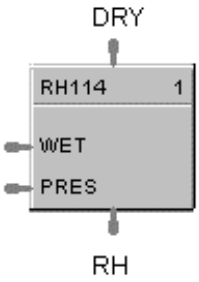

This block is part of the *Calculations* category.

Function

Calculates RH as a function of wet bulb temperature, dry bulb temperature and atmospheric pressure.

0-100 % RH is output as a floating point number between 0 and 100.

Input

DRY = Dry Bulb Temperature (°F, metric = °C)

WET = Wet Bulb Temperature (°F, metric = °C)

PRES = Atmospheric Pressure (psi, metric = Pa)

Output

RH = Relative Humidity (0-100)

Block properties

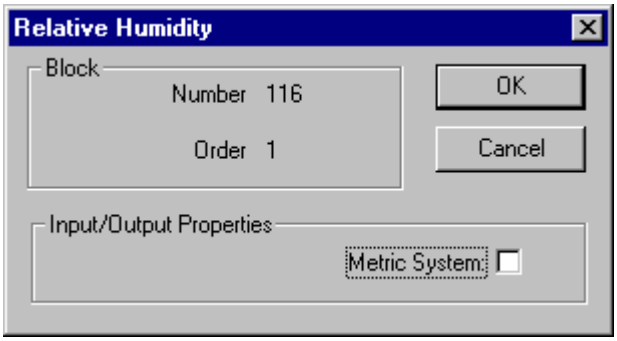

Double click on the function block to access the function block properties dialog box.

Metric system

Table 99 Metric units

Metric	ON	OFF
DRY	°C	°F
WET	°C	°F
PRES	Pa	PSI

TIP

It is physically impossible for the wet bulb to be warmer than the dry bulb. If this appears to be the case, it implies a problem with the sensors, and will result in a RH greater than 100 %. Downstream blocks should detect that situation and react promptly.

Example

Figure 89 shows an RH function block example.

A setup parameter allows inputs to be in Degrees F or Degrees C. When Degrees F is selected, pressure is assumed to be in PSIA. When Degrees C is selected, pressure is assumed to be in Pa. (101325 Pa = 1 std. Atmosphere.

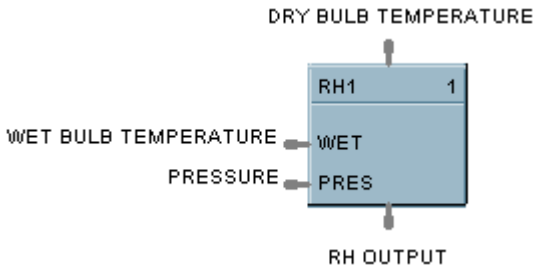

Figure 89 RH function block example

ROC Rate of Change Function Block

Description

The **ROC** label stands for **Rate of Change.**

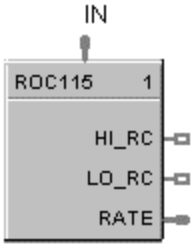

This block is part of the Auxiliary category.

Function

Provides:

- an analog output representing units per minute change of the analog input.
- compare setpoints for high and low rate of change.
- compare selections for increasing, decreasing or both directions of change.
- a logic 1(ON) output when input rate exceeds high rate setpoint
- a logic 1(ON) output when input rate is less than the low rate setpoint.

Inputs

IN = Analog Input

Outputs

HI_RC = ON if input rate exceeds High Rate setpoint

LO_RC = ON if input rate is less than the Low Rate setpoint

RATE = Analog Output representing Engineering Units per minute of change of the Analog Input

Block properties

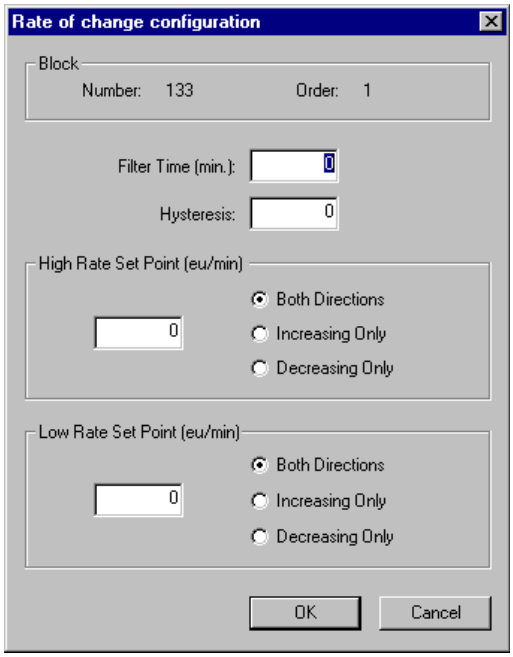

Double click on the function block to access the function block properties dialog box.

Configuration parameters

Table 100 ROC configuration parameters

Properties Group	Parameter	Index #	Parameter Description	Value or Selection
Filter Time Constant		0	Filter Time Constant	0.0 to 3.0 minutes
Setpoint Limits	**High Rate**	1	High Rate of Change setpoint	0 (off) to 99999.9 eu/min
	Low Rate	2	Low Rate of Change setpoint	0 (off) to 99999.9 eu/min
Direction Rate High		3	High Rate Direction • Both • Increasing only • Decreasing only	Click on radio button to select
Direction Rate Low		4	Low Rate Direction • Both • Increasing only • Decreasing only	Click on radio button to select
Hysteresis		5	Hysteresis	0-999

Example

Figure 90 illustrates various responses for the Rate Of Change Function Block. You can also use the ROC block to alarm if Rate exceeds the Preset Setpoint Limit.

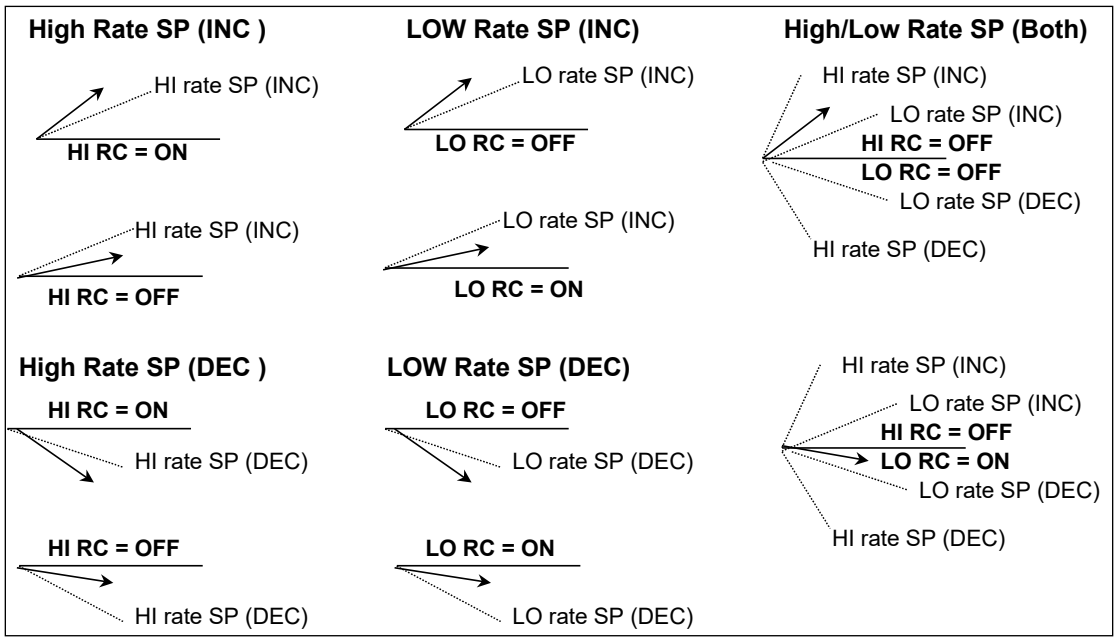

Figure 90 ROC function block responses

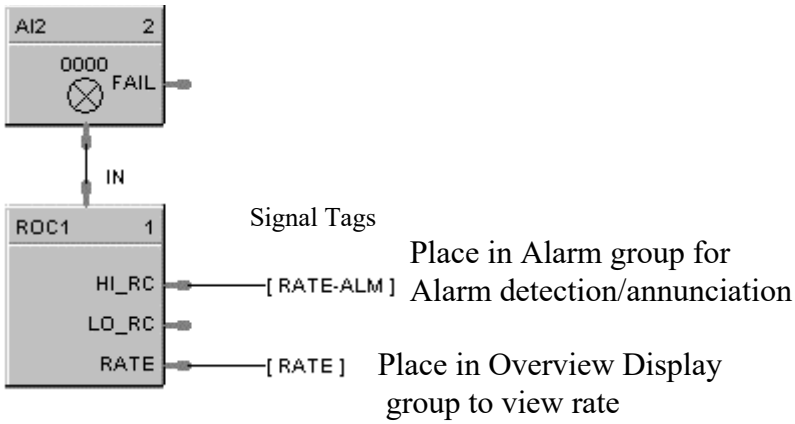

Figure 91 ROC function block example

RSTAT Redundancy Status Function Block

Description

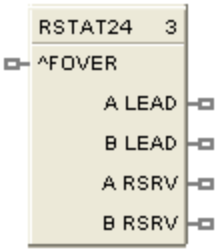

The **RSTAT** label stands for **Redundancy Status**. This block is part of the *Alarms/Monitors* category.

Function

Used with redundant CPUs only, such as C75. The output pins indicate the lead/reserve status of CPU A and CPU B. The input can force a failover between CPUs.

Inputs

^FOVER – OFF-to-ON transition causes a manual failover between CPUs if a Reserve CPU is online and available.

Outputs

A LEAD – ON when CPU A is the Lead, else OFF.

B LEAD – ON when CPU B is the Lead, else OFF.

A RSRV – ON when CPU A is the Reserve, else OFF.

B RSRV – ON when CPU B is the Reserve, else OFF.

Configurable Parameters

Table 101 Redundancy Status configuration parameters

Properties Group	Parameter	Index #	Parameter Description	Value or Selection
Block	**Order**	N/A	Execution Order for Block	Read Only. To change block order, right-click on a Function Block and select Execution Order.

RSW Rotary Switch Function Block

Description

The **RSW** label stands for **Rotary Switch**.

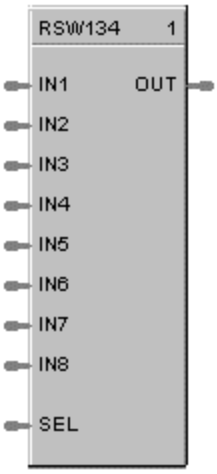

This block is part of the *Signal Selectors* category.

Function

The single output value is selected from up to 8 analog inputs by a number of from 1 to 8.

ATTENTION

Numbers less than one select input one as the output. Numbers greater than eight select Input 8 as the output.

Input

IN1 = Input 1
IN2 = Input 2
IN3 = Input 3
IN4 = Input 4
IN5 = Input 5
IN6 = Input 6
IN7 = Input 7
IN8 = Input 8
SEL = Selects Input # to Output

Output

OUT = Output Value

Block properties

Double click on the function block to access the function block properties dialog box.

Example

Figure 92 shows how a RSW function block works. It selects an output value from up to 8 analog values or number inputs.

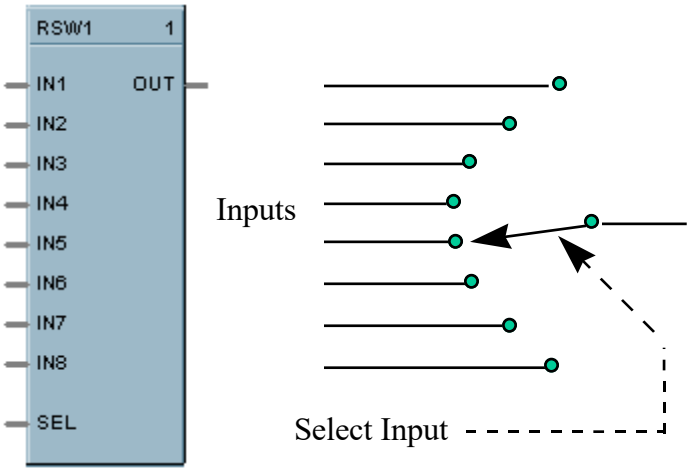

Figure 92 RSW function block example

RTC Real Time Clock Function Block

Description

The **RTC** label stands for **Real Time Clock**.

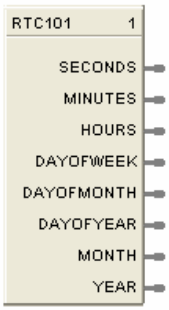

This block is part of the *Counters/Timers* category.

Function

The Real Time Clock block provides outputs pins that you can access in your configuration to make decisions based on the value of the controller's Real Time Clock value.

The RTC function block has the following dynamic outputs based on the value of the real time clock of the controller:

Seconds, Minutes, Hours, Day of Week, Day of Month, Day of Year, Month, Year.

Example

Figure 93 shows a function block diagram using a RTC function block.

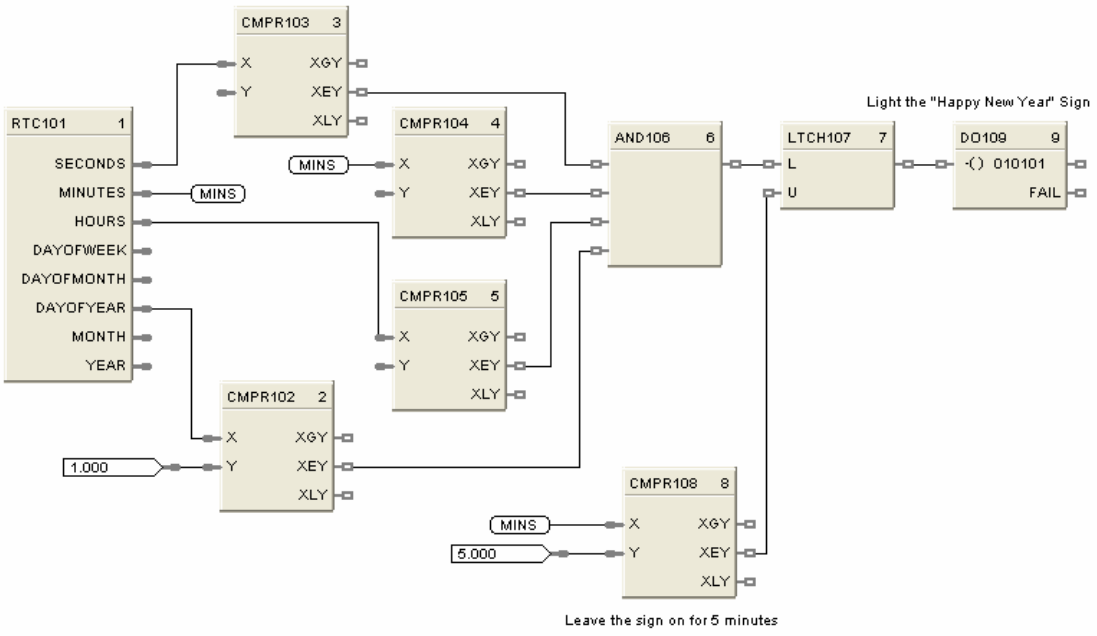

Figure 93 RTC function block example

RTMR Resettable Timer Function Block

Description

The RTMR label stands for Resettable Timer.

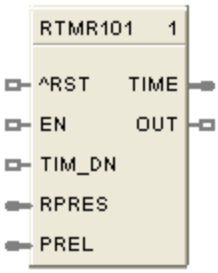

This block is part of the *Counters/Timers* category.

Function

The Resettable Timer block has the following attributes:

- Provides increasing or decreasing timing base on an enable input.
- Increasing time from 0 or preload value.
- Decreasing time from preset or preload value.
- Increasing time provides digital output upon reaching Preset
- Decreasing time provides digital output upon reaching zero
- Reset input sets increasing timer to zero.
- Reset input sets decreasing timer to preset value.
- Preset value may be internal, or remote via a dedicated input
- Inc./Dec. selection is via digital input.
- Toggling the reset (RST) pin resets the current elapsed time and loads the new preset value; therefore, if changing the preset value (remote or local), the user must enter the new preset value, then reset the timer for the new preset to be used during the next time cycle. If the timer is reset prior to entering the new preset value, the timer will use its previous preset for its compare condition.

Inputs

RST = Off to On transition, Reset. Toggling RST resets the current elapsed time and loads the new preset value; therefore, if changing the preset value (remote or local), the user must enter the new preset value, then reset the timer for the new preset to be used during the next time cycle. If the timer is reset prior to entering the new preset value, the timer will use its previous preset for its compare condition.

EN = ENABLE ON = run; timer is counting
OFF = Timer is stopped; output (TIMER) held at last value

TIM_DN = ON (time down); OFF (time up)

RPRES = Remote Preset (0.0 – 99999.9)
If *Time-up*, RPRES represents **Stop** value in seconds
If *Time -down*, RPRES represents **Start** value in seconds

PREL = Preload (0.0 – 99999.9)
If *Time-up*, PREL represents **Start** value in seconds
If *Time-down*, PREL represents **Start** value in seconds

Outputs

TIME = Elapsed time (for TIM_DN input =OFF), Time Remaining (for TIM_DN input = ON)

OUT = Output (Digital) turned ON when Preset value is reached or time reaches 0, depending on TIMDN input status

Block properties

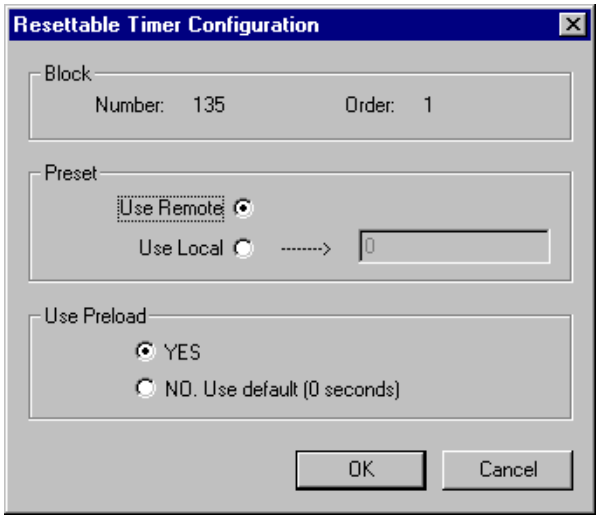

Double click on the function block to access the function block properties dialog box.

Configuration parameters

Table 102 RTMR configuration parameters

Properties Group	Parameter	Index #	Parameter Description	Value or Selection
Presets	**Local Preset**	0	Local Preset	Click Radio Button to select Enter a value in the field 1 to 99999
Remote Preset		1	ON = use remote preset	Click on radio button to select
Use Preload		2	YES = use external preload rather than zero for starting or stopping NO = Use default (0 second)	Click on radio button to select

Timing diagram

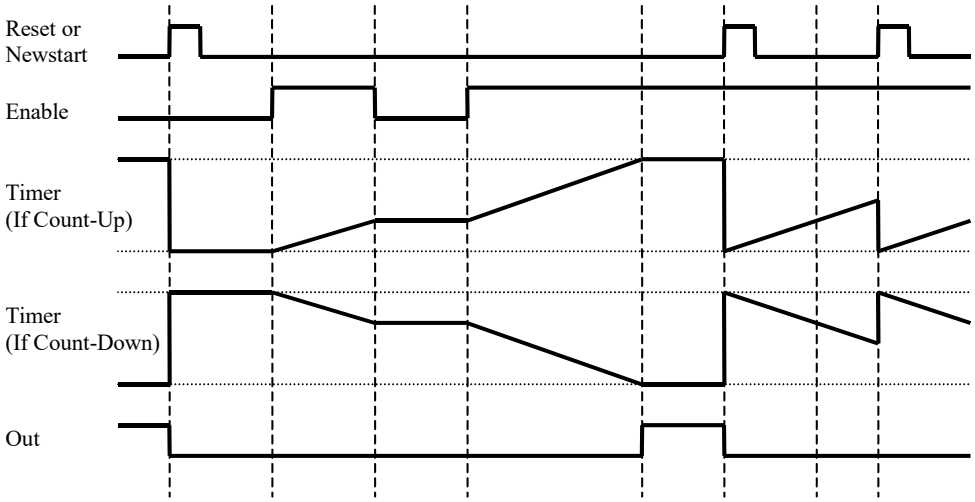

Figure 94 Timing diagram for resettable timer

RUIO-AI Function Block

Description

The RUIO - AI label stands for Redundant Universal IO Analog Input (Supported only with UIO module).

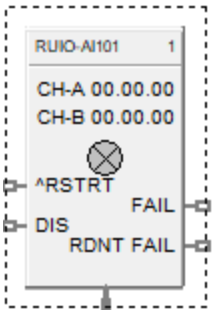

This block is part of the *I/O Blocks* category.

Function

Reads value of an RUIO-Analog Input from a specified real I/O address. Convert analog input value to corresponding output (OUT) in engineering units based on the necessary scaling and conversions performed.

LINEAR - Converts analog input value to corresponding output in units based on a linear 0 % to 100 % scale and specified high and low range values +/-10% over range.

OUT = Scale x Input value + Bias
where:

$$\text{Scale} = \frac{\text{High range value - Low range value}}{100}$$

Input value = Analog Value in percent

Input

Analog value from specified real I/O address.

^RSTRT = Restart Signal –

When used, a positive (rising) input pulse releases OUT from its failsafe value and FAIL pin from its ON state. **Reset to this pin is MUST** for clearing this channel fault after repair. This allows for the replacement or repair of the failed AI module or failure condition and operator controlled release.

DIS = disable the RUIO AI channel

Output

FAIL = Status of the channel
Digital Low (0) = OK
Digital High (1) = Both channels (CH-A and CH-B) failed

RDNTFAIL = Status of the channel
Digital Low (0) = OK
Digital High (1) = Either CH-A or CH-B failed

Configuration parameters

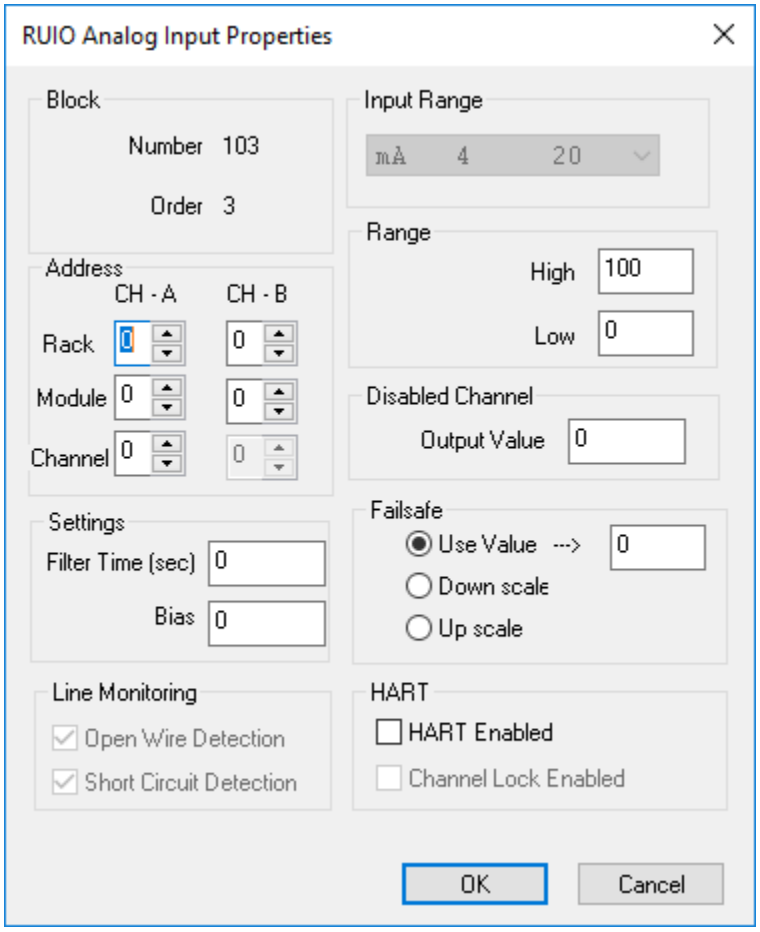

Table 103 RUIO-AI configuration parameters

Properties Group	Parameter	Index #	Parameter Description	Value or Selection
Block	Order	N/A	Execution Order for Block	Read Only.
Address	Rack		This is the address of the selected Redundant UIO modules rack position (CH-A and CH-B).	Enter a value: from 1 to 12.
	I/O Module		Address of selected redundant I/O modules (CH-A and CH-B).	Enter a value: from 1 to 12
	Channel		Channel on selected redundant I/O modules (CH-A and CH-B). **Note**: CH-B is Read Only. CH-B value is same as CH-A.	Enter a value: 3 to 16.
Input Range	Input Range	N/A	Input range 4-20 mA	

Range	High Range Value	N/A	For Linear Inputs Only - output value that corresponds to 100 % input value For example: Actuation Input = 4-20mA Process variable = Flow Range of Flow = 0 to 250 gal/min High Range Display Value = 250 Low range Display Value = 0 Then 20mA = 250, 4mA = 0	Enter a value: - 99999 to 99999 Default = 100
	Low Range Value	N/A	For Linear Inputs Only - output value that corresponds to 0 % input value For example: See "High Range Value"	Enter a value: - 99999 to 99999 Default = 0
Disable Channel	Output Value	9	The output value when the AI channel is disabled. Disable = ON	Enter a value Default = 0
Settings	Filter Time (sec)	7	A software digital filter is provided for the input designated to smooth the input. You can configure the first order lag time constant from 1 to 120 seconds. 0=no filter	Enter a value: 0 to 120 seconds
	Bias	8	Bias is used to compensate the input for drift of an input value due to deterioration of a sensor, or some other cause.	Enter a value: - 99999 to 99999
Failsafe	Failsafe Type	4	Type of Failsafe	**Use Value -** sets the output to the programmed value when failure is detected. **Downscale -** Value set at "Low range value" field. **Upscale** - Value set at "High range value" field.
Line Monitoring	Short circuit Detection Open Wire Detection	N/A	Short circuit detection check enable Open Wire detection check enable	Read only
HART	HART Enabled	N/A	Check this box to use HART	Select “HART Enabled” check box to enable or disable HART IP functionality.
	Channel Lock Enabled	N/A	Block Writes from Field Device Manager (FDM)	

Note: The HART functionality on Channel 6 supports only from the UIO module hardware revision D and above. Ensure that the right module is installed in the rack to use Channel 6 for HART. The module hardware revision can be found on the backside (light pipe side) of the UIO module.

Example

Below diagram shows Function block diagram:

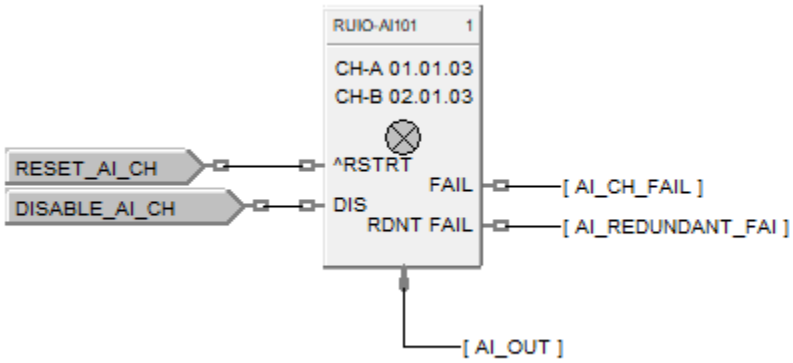

Figure 120 RUIO - AI function block example

RUIO-AO Function Block

Description

The RUIO-AO label stands for Redundant Universal Analog Output (Supported only with UIO module).

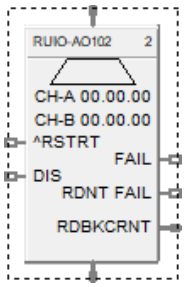

This block is part of the *I/O Blocks* category.

Function

Range High and Range Low are used to specify the Engineering Unit values for 100 % and 0 % of this block's input span. For reverse outputs, Range High may be set to a value less than Range Low.

The output range high and range low values (4-20 maximum) set the milliamp output values that correspond to the 0 % to 100 % span limits of the inputs.

Note:

- Currently maximum of 400 RUIO AO channels supported in one system/CDE
- Safety RUIO module will drive configured failsafe value only when IO module lose communication to controller else it will drive field value to unpowered for any other IO module diagnostic faults.

Input

X = Input Analog Signal

^RSTRT = Restart Signal –

When used, a positive (rising) input pulse releases OUT from its failsafe value and FAIL pin from its ON state. **Reset to this pin is MUST** for clearing this channel fault after repair. This allows for the replacement or repair of the failed AO module or failure condition and operator controlled release.

DIS = Disable Signal – When used and made ON, disables the AO Channel and results in disabling of ^RSTRT functionality. If DIS pin left unconnected or made OFF, results in Normal Operation i.e. it enables the function block.

Output

OUT = Converted value sent to specified real I/O address (mA).
FAIL = Status of the channel
Digital Low (0) = OK
Digital High (1) = Both channels (CH-A and CH-B) failed

RDBKCRNT = Read back current (in mA)

RDNTFAIL = Status of the channel
Digital Low (0) = OK
Digital High (1) = Either CH-A or CH-B failed

Block properties

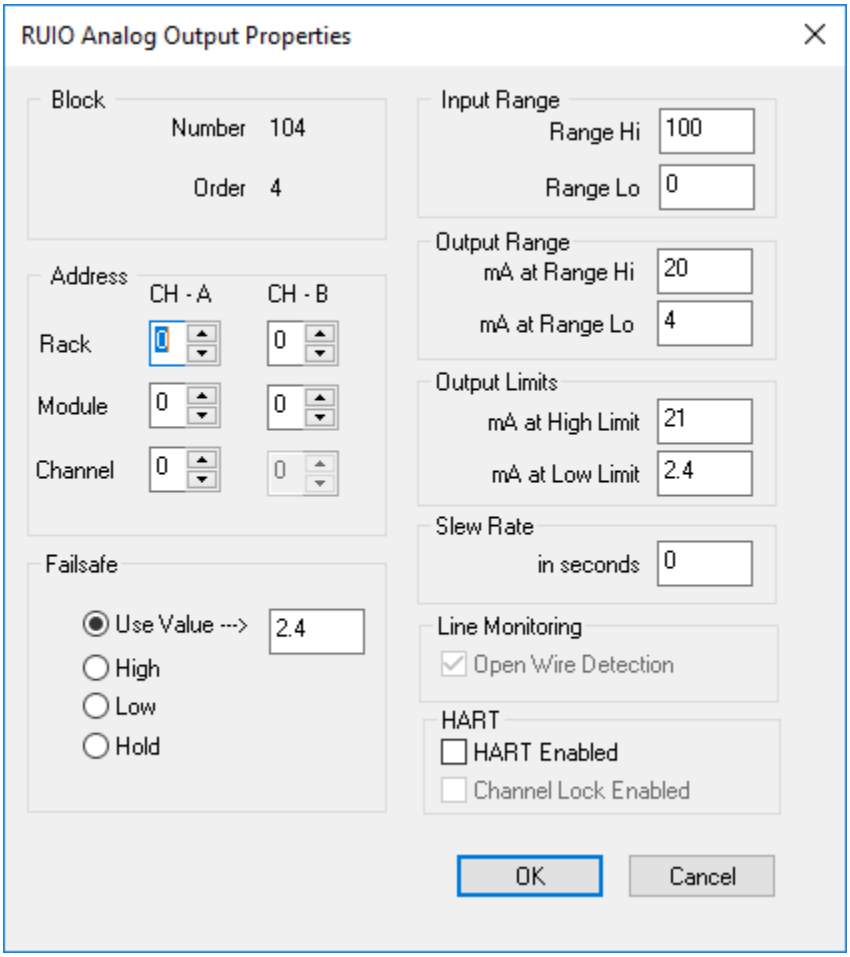

Double click on the function block to access the function block properties dialog box.

Configuration parameters

Table 104 Analog output configuration parameters

Parameter	Index #	Parameter Description	Value or Selection
Block Order	N/A	Execution Order for Block	Read Only
Rack Address		This is the address of the selected redundant Racks (CH-A and CH-B).	1 to 12
I/O Module Address		Address of selected redundant I/O modules. (CH-A and CH-B).	1 to 12
Channel Address		Channel on selected redundant I/O modules (CH-A and CH-B). **Note**: CH-B is Read Only. CH-B value is same as CH-A.	9 to 16
Range Hi	6	High Range Value Engineering Unit - value of input that corresponds to 100 % output value	- 99999 to 99999 Default = 100
Range Low	7	Low Range Value Engineering Unit - value of input that corresponds to 0 % output value	- 99999 to 99999 Default = 0.0
mA at range High	8	Value of mA output that corresponds to 100 % output signal (for example: 20 mA)	4 to 20 Default = 20
mA at Low Range	9	Value of mA output that corresponds to 0 % output signal (for example: 4 mA)	4 to 20 Default = 4
mA at range High Limit	N/A	Value of mA that you want to set the High Range Limit	2 to 21 Default = 21
mA at Low Range Limit	N/A	Value of mA that you want to set the Low Range Limit	2.4 to 21 Default = 2.4
Failsafe Type	4	Type of Failsafe	**Use Value -** sets the output to the programmed value when failure is detected. (2.4 to 21, Default = 2.4) **High -** sets the output of the block to the High Output Range Value when failure is detected **Low** - sets the output of the block to the Low Output Range Value when failure is detected

			Hold - maintains the last value of the block just prior to the failure being detected Click on Radio Button to select.
Slew Rate in seconds	11	Slew Rate is the maximum rate of change required to drive the output from full OFF (0% - typically 4 mA) to full ON (100% - typically 20mA). The block will convert this to a maximum change of the milliamp output per execution cycle of the block.	0.0 to 99
Open Wire Detection	N/A	Open Wire detection check enable	Read only
HART Enabled	N/A	Check this box to use HART	Select “HART Enabled” check box to enable or disable HART IP functionality.
Channel Lock Enabled	N/A	Block Writes from Field Device Manager (FDM).	

Example

Below shows Function Block Diagram using RUIO-AO

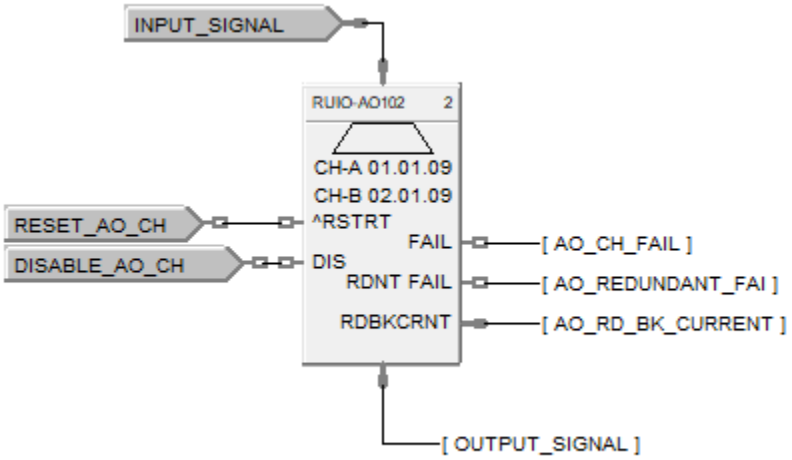

Figure 121 RUIO-AO function block example

RUIO-DI Function Block

Description

The RUIO-DI label stands for Redundant Universal IO Digital Input (Supported only with UIO module).

This block is part of the *I/O Blocks* categories.

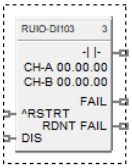

Function

Provides the digital status of a digital input point and provides interface to other algorithms and functions. The output status may be inverted.

If Digital Point is ON, then OUT = ON

Input

^RSTRT = Restart Signal –

When used, a positive (rising) input pulse releases OUT from its failsafe value and FAIL pin from its ON state. **Reset to this pin is MUST** for clearing this channel fault after repair. This allows for the replacement or repair of the failed AO module or failure condition and operator controlled release.

DIS = disable the RUIO DI channel

Output

OUT = Digital Signal

FAIL = Status of the channel
Digital Low (0) = OK
Digital High (1) = Both channels (CH-A and CH-B) failed

RDNTFAIL = Status of the channel
Digital Low (0) = OK
Digital High (1) = Either CH-A or CH-B failed

Block properties

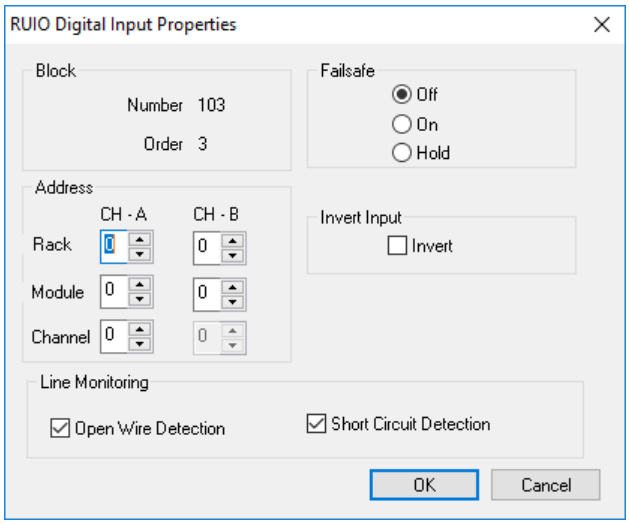

Double click on the function block to access the function block properties dialog box.

Configuration parameters

Table 105 RUIO Digital input configuration parameters

Parameter	Index #	Parameter Description	Value or Selection
Rack Address	N/A	This is the address of the selected redundant Racks (CH-A and CH-B).	From 1 to 12
I/O Module Address	0	Address of selected redundant I/O modules (CH-A and CH-B).	From 1 to 12
Channel Address	N/A	Channel on selected redundant I/O modules (CH-A and CH-B). **Note**: CH-B is Read Only. CH-B value is same as CH-A.	From 3 to 16,
Failsafe Type	4	Type of Failsafe	**ON -** set the output of the block to ON when failure is detected **OFF -** set the output of the block to OFF when failure is detected **Hold** - maintains the last value of the block just prior to the failure being detected
Invert	5	If INVERT is selected, OUT = inverse of physical input. The slash will be present in the CONTACT symbol only when the invert box is selected on the dialog box.	
Short circuit Detection Open Wire Detection	N/A	Short circuit detection check enable Open Wire detection check enable	Click on Radio to select or deselect

Example

Figure 122 shows a Function Block Diagram using a RUIO-DI function block.

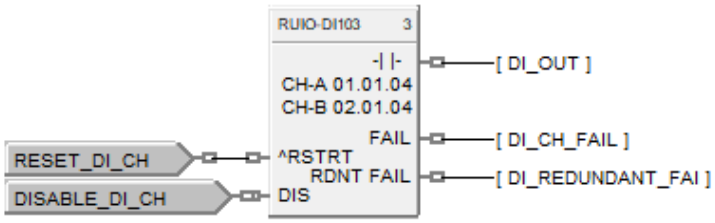

Figure 122 RUIO-DI function block example

RUIO-DO Function Block

Description

The RUIO-DO label stands for Redundant Universal Digital Output (Supported only with UIO module).

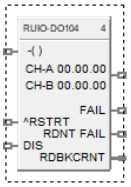

This block is part of the *I/O Blocks* categories.

Function

Provides a digital status from the algorithms and functions to a physical logic output.
The output status may be inverted.

Note:

- Safety RUIO module will drive configured failsafe value only when IO module lose communication to controller else it will drive field value to unpowered for any other IO module diagnostic faults.
- It is required to reset DO channel to resume from failsafe state for new DO block after hotstart
- In the openwire condition, performing reset on RUIO DO, channel status become healthy for 9 sec and then detects the openwire. During this period output changes as per the input.
- If DO is "Forced" during Open Wire Detection, then the output will show as Fail-Safe Value instead of Forced Value. However, the status will show as Forced.

Input

X = Input Status Signal

^RSTRT = Restart Signal – When used, a positive (rising) input pulse releases OUT from its failsafe value and FAIL pin from its ON state. **Reset to this pin is MUST** for clearing this channel fault after repair. This allows for the replacement or repair of the failed DO module or failure condition and operator controlled release.

DIS = Disable Signal – When used and made ON, disables the DO Channel and results in disabling of ^RSTRT functionality. If DIS pin left unconnected or made OFF, results in Normal Operation i.e. it enables the function block

Output

OUT = Physical Output Value

RDBKCRNT = Read back current (in mA). This values will have deviation of 1 to 20mA as field current goes high.

FAIL = Status of the channel
Digital Low (0) = OK
Digital High (1) = Both channels (CH-A and CH-B) failed

RDNTFAIL = Status of the channel
Digital Low (0) = OK
Digital High (1) = Either CH-A or CH-B failed

Block properties

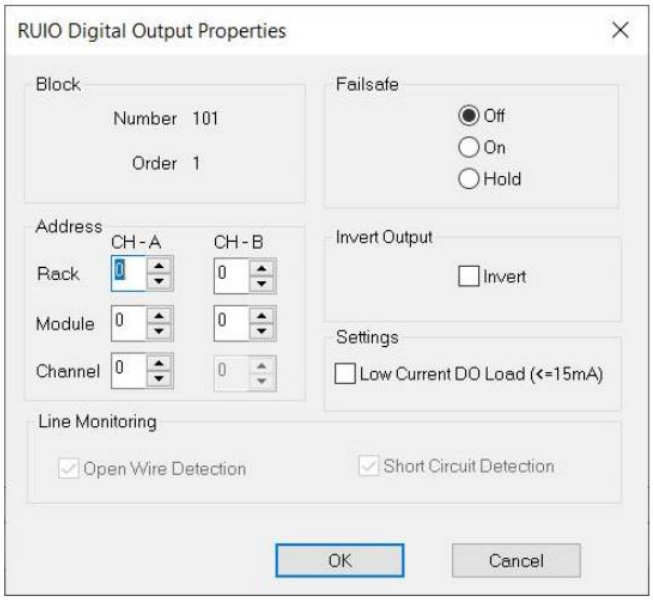

Double click on the function block to access the function block properties dialog box.

Table 106: Configurable Parameters RUIO DO

Parameter		Parameter Description	Value or Selection
Rack Address	N/A	This is the address of the selected redundant Racks (CH-A and CH-B).	From 1 to 12
I/O Module Address	0	Address of selected redundant I/O modules (CH-A and CH-B).	From 1 to 12
Channel Address	N/A	Channel on selected redundant I/O modules (CH-A and CH-B). **Note**: CH-B is Read Only. CH-B value is same as CH-A.	From 3 to 16.
Failsafe Type	4	Type of Failsafe	**ON -** set the output of the block to ON when failure is detected **OFF -** set the output of the block to OFF when failure is detected **Hold** - maintains the last value of the block just prior to the failure being detected
Invert	5	If INVERT is selected, OUT = inverse of physical input. The slash will be present in the CONTACT symbol only when the invert box is selected on the dialog box.	

Short circuit Detection Open Wire Detection	N/A	Short circuit detection check enable Open Wire detection check enable	Read only
Low Current DO Load	N/A	Select the "Low Current DO Load" checkbox to connect the DO load that drives current <=15mA.	

Example

Figure 123 shows a Function Block Diagram using a RUIO-DO function block.

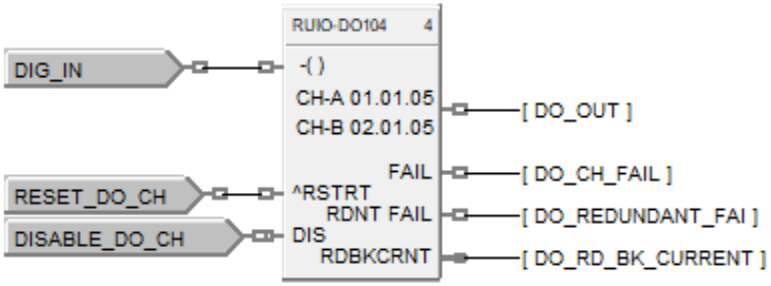

Figure 123 RUIO-DO function block example

SAFPDE Safety Peer Monitor Function Block

Description

The **SAFPDE** label is short-hand for the **Safety Peer Monitor** block.

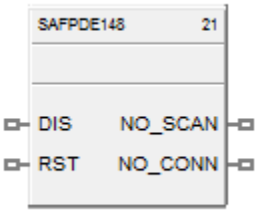

This block is a member of the Communications category and is only available on SIL devices, such as the C30S, C50S, C70S, and C75S using version 6.3xx and above.

Function

The Safety Peer Monitor block functions similar to the Peer Comm (PDE) block. It is a communication function block that allows interconnecting controllers with Ethernet media and networking devices to communicate with each other.

This allows controller to monitor the safety peer communication status with peer controller. SAFPDE block is required for safety peer communication to work. Also, it is recommended to have failsafe timeout (in block configuration properties) of 5 times the publisher or subscriber Normal Cycle time whichever is higher.

Inputs

DIS = DIS pin disables the communication between the two controllers and NO_SCAN pin will become ON.

RST = RST resets the communication with peer controller selected in the Safety Peer Monitor block

Outputs

NO_SCAN – ON = device has not received updates from peer within the time defined by the failsafe time selected within the block properties.
OFF = device is receiving updates from peer.

NO_CONN – **ON** = cannot connect to peer device.
OFF = good connection, Peer found.

Block Properties

Double click on the function block to access the function block properties.

Configuration Parameters

When the properties page is opened after adding the Safety Peer Monitor block to the configuration, the user will be prompted to select the '.xml' from the configuration that corresponds to the controller they would like to monitor. The image below shows what the user will see when opening a Safety Peer Monitor block that has yet to be configured:

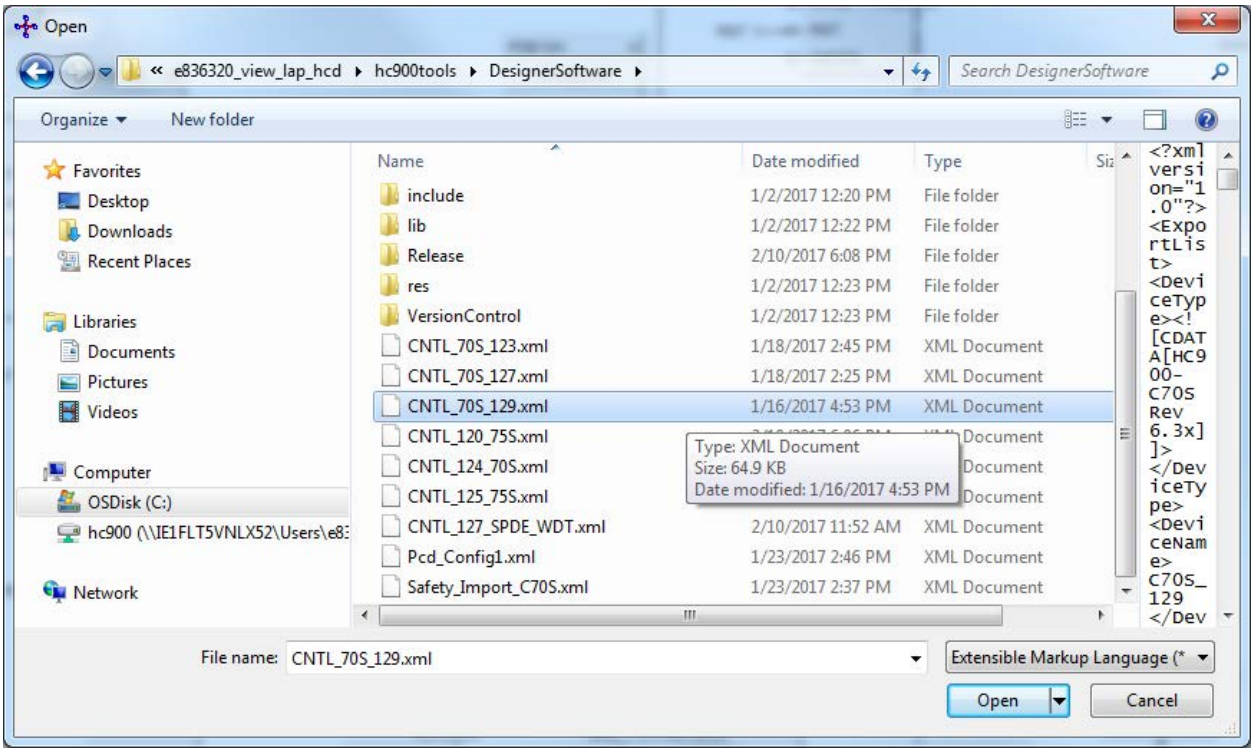

After selecting the XML that corresponds with the configuration the user wants, the Peer Name field will be populated, as shown below:

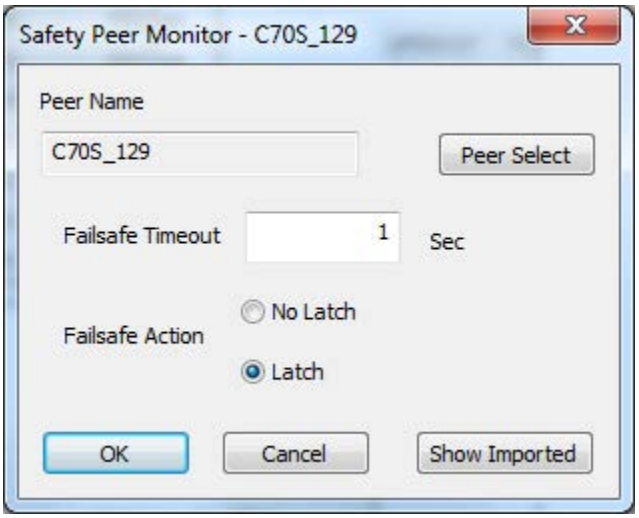

Note: Safety peer needs Reset (off to on) trigger at RESTART pin to resume communication after cold start when the *latch* option is selected.

The default 'Failsafe Timeout' is set to 3 seconds. The user can choose a new timeout in seconds or franctions of seconds rabged from 1 to 30 seconds, and then press 'OK'. This failsafe timeout applies to NO_SCAN PIN status of the controller shown in 'Peer Name'.

Parameter	Index #	Parameter Description	Value Or Selection	Default
Peer Name	N/A	Name of the Peer Controller for this block	Selected thru the xml file selection	NA
Failsafe Timeout	N/A	Failsafe Timeout in seconds or fractions of seconds	Enter between 1.0 to 30.0	3 sec
Failsafe Action	N/A	Action to be taken when the failsafe timeout occurs. No Latch – NO_SCAN status will get reset(OFF) once the peer communication resumes Latch – NO_SCAN remain ON (latched) even after the peer communication resumes until reset (RST) given	Click on radio button to select	Latch

Related Function Blocks

- ANAIMP – Safety Analog Import block
- DIGIMP – Safety Digital Import block

Example:

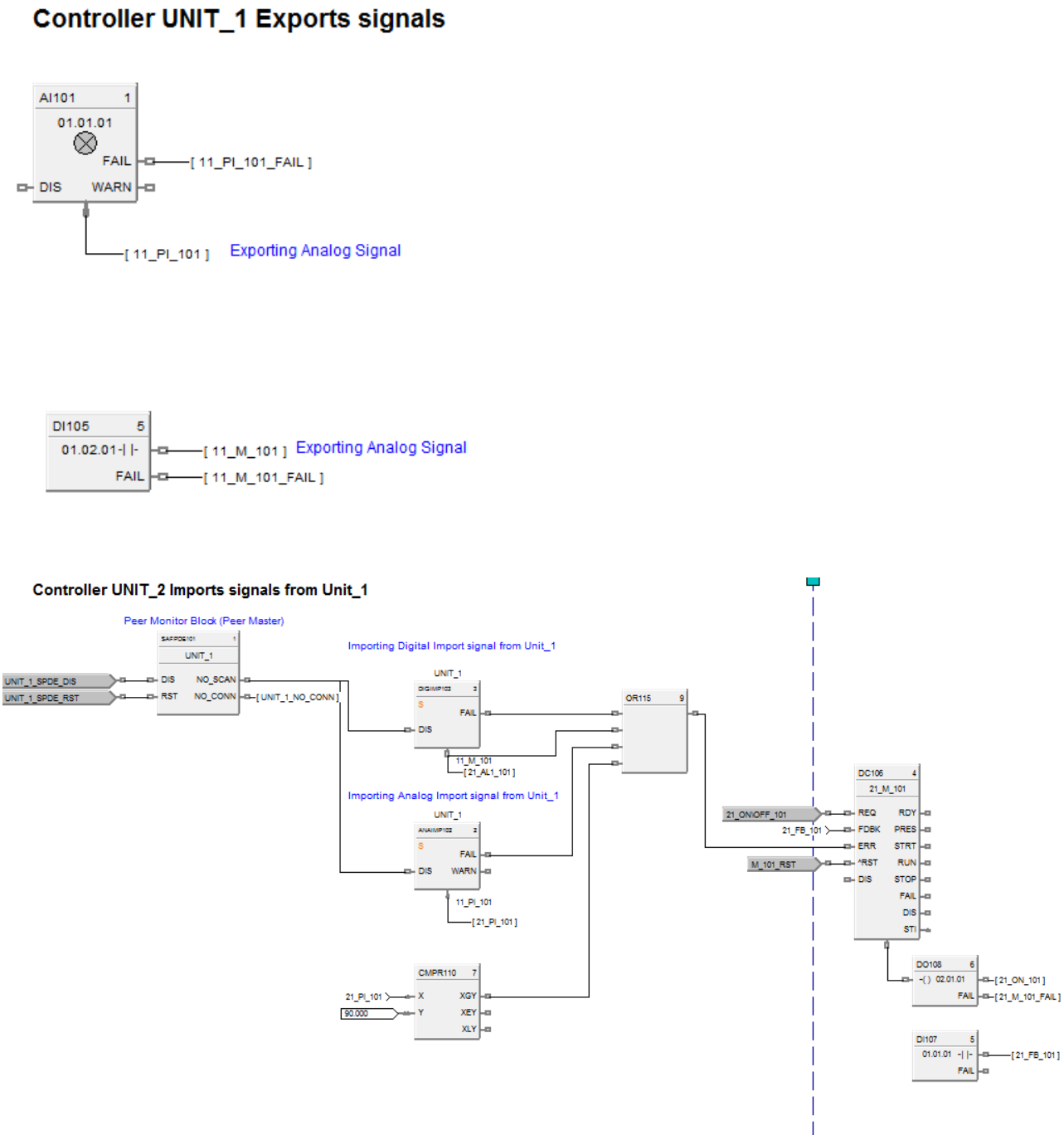

Figure 95 SAFPDE function block examples

SCB Scale and Bias Function Block

Description

The **SCB** label stands for **Scale and Bias**.

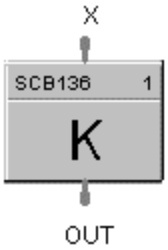

This block is part of the *Math* category.

Function

Multiplies an analog input value (X) by a scaling constant (K) and adds Bias to it.

- OUT = (K * X) + BIAS

Input

X = Analog Value

Output

OUT = Modified Analog Value

Block properties

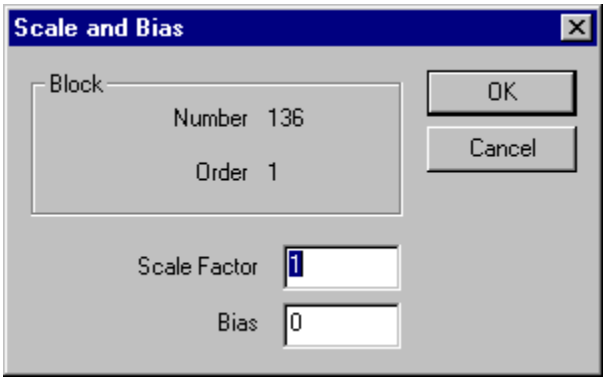

Double click on the function block to access the function block properties dialog box.

Configuration parameters

Table 107 SCB configuration parameters

Properties Group	Parameter	Index #	Parameter Description	Value or Selection
	Scale Factor	0	K - Multiplier (scaling) constant	–99999 to 99999
	Bias	1	Bias Constant - is used to compensate the input for drift of an input value due to deterioration of a sensor, or constant offset to an input.	–99999 to 99999

Example

Figure 96 shows function block diagrams using a SCB function block.

Example 1
Scale Factor = 5
Bias = 1000

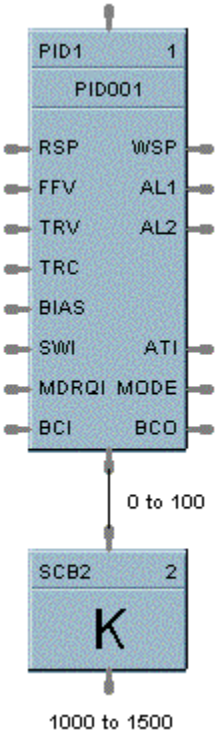

Example 2
Scale Factor = 1
Bias = 460

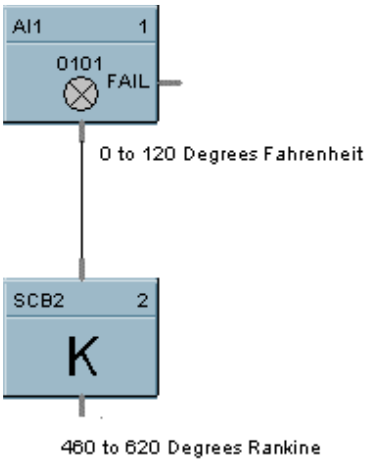

Figure 96 SCB function block examples

SEQ Sequencer Function Block

Description

The **SEQ** label stands for **Sequencer.**

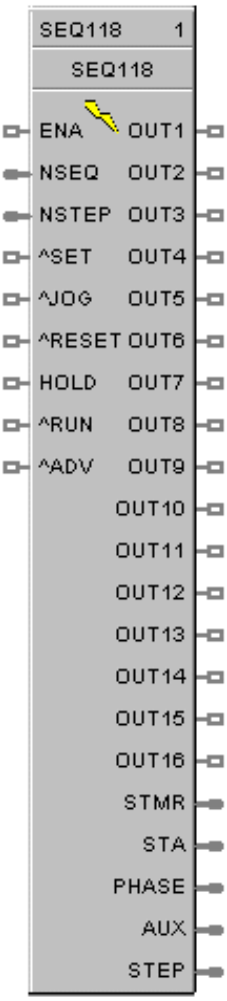

This block is part of the *Fast Logic* categories.

Function

Each sequencer supports up to 16 digital outputs that may be either on or off in each of 50 states e.g. PURGE, FILL, HEAT, etc, per block The sequencer may have up to 64 sequential steps that activate within the states of the process.

Steps of the sequencer may be configured to advance based on time, on digital event (2 per step), or a manual advance. A separate jog function is also provided.

The function can also configure an analog output on a step basis. The operational sequence for the steps is retained in a separate sequence file in the memory of the controller that may be selected on-demand through a user interface or via a recipe.

Up to 20 sequences may be stored.

Inputs

ENA = Level input to enable the block - only checked in Ready State; input is ignored if not connected.

NSEQ = Sequence Number. See ATTENTION below.

NSTEP = Starting Step Number. See ATTENTION below.

^SET = Pulse input to load NSEQ and NSTEP numbers. See ATTENTION below.

^JOG = Pulse input to jog to step number

^RESET = Pulse input for reset

HOLD = Input for Hold (level trigger)

^RUN = Edge triggered input for run

^ADV = Edge triggered input to advance to the next step defined in the current sequence step

ATTENTION

If either or both NSEQ and NSTEP are connected directly to analog variables, when that analog variable changes (for example: via a recipe load), then the Sequencer block will immediately use the new value internally.

If NSEQ or NSTEP is connected to any other function type then their values are loaded into the Sequencer only when ^SET goes through a positive transition.

- When in Hold and Segments Event satisfied, it stays in Hold but will Advance. If not desired, suggest inserting a conditional block to keep event from being accepted until after Hold is removed.

- Event Inputs are Edge triggered. If an Event is satisfied before the active segment, it will not be recognized. One option is a timer circuit AND'd with Event signal to intentionally change to a 2-Second pulse and satisfy edge-triggered input.

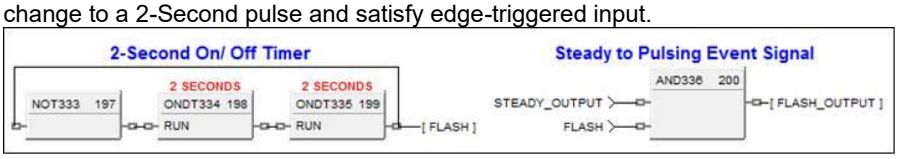

Outputs

OUT1 thru OUT16 = State Output values

STMR = Time remaining in current step (minutes)

MODE = Sequence Mode [N/A, RESET, RUN, HOLD, STOP]

STATE = Current State number (Output states as configured by the user)

AUX = Auxiliary Output corresponding to the current step

STEP = Current Step number

Configurable Parameters

The Sequencer properties dialog box is divided into 3 tab cards

General tab

Parameter	Index #	Parameter Description	Value or Selection
Tag Name	0	A unique tag name of Sequencer	Up to 32-characters (ASCII characters only)
Descriptor		Description of Sequence	Up to 32-characters (ASCII characters only)
Aux label		Auxiliary Output label for OI Display	8 characters maximum
Aux Units		Auxiliary Output Engineering Units for OI Display	4 Characters maximum
Aux Decimal Places		Decimal Places for Auxiliary Output Value	0-3

Labels tab

Parameter	Index #	Parameter Description	Value or Selection
Out1 thru Out16	0	Output Labels for OI Display	8 characters maximum

States tab

Parameter	Index #	Parameter Description	Value or Selection
State Name	0	Name of State	12 characters maximum
Digital Outputs		Digital Output States 1 to 16	Select from dropdown menu ON(1) or OFF(0)
Event Signal 1		Event Signal #1 Tag	Select from drop-down menu Analog Signal Tags Output Tags
Event Signal 2		Event Signal #2 Tag	Select from drop-down menu Analog Signal Tags Output Tags

Example

The process controlled in this example is representative of many sequential batch operations. **See Figure 97**. The Sequencer function block's digital outputs are connected to the controller digital output function blocks to control the operation of the various field devices such as pumps, valves, solenoids and other equipment needed to execute the batch process function. The digital outputs may also be connected to other function blocks in the control strategy as needed.

In the example the auxiliary analog output (AUX) is connected to an analog output block to set the speed of an external device such as a variable speed drive.

The Sequencer function block can be started, held, advanced or reset from a Honeywell operator Interface or from digital signals as indicated in the example. The status of the Sequencer block may be monitored using block outputs such as current state number, current step number and mode from signals available on the block, or from the Honeywell operator interface.

The actual sequence to be executed is made up of two data sets. The first data set defines which digital outputs will be ON or OFF for each State of the function block, **See Figure 98**. Up to 50 States may be defined for the block. Each state also has a 12 character state label that is used by the Honeywell operator interface to indicate the active state. This data set also provides input fields to define two digital signals that may be used to cause the sequencer to exit the current state. The Tag names in the columns for Event Signal #1 and Event Signal #2 represent the digital signals of the control strategy that will be used to exit the associated state.

The second data set needed to execute a sequential control strategy is the actual sequence, **See Figure 99**. This data set has a series of steps, 1 through 64. Each step is setup to activate a specific State (set of digital outputs) from the function block. The sequencer will remain in the Step until a user specified time has elapsed or until either of the events for the specific State transitions from OFF to ON, causing the step to advance.

The next step in the sequence can be different depending on the action that causes the sequencer to exit the step. Time, event 1, event 2 and advance step each allow the user to specify a unique next step value. Depending on the item that occurs first, elapsed time, event 1, event 2, or advance, the sequencer will advance to the specified next step. This provides the flexibility to take alternate action if the expected action does not occur on schedule.

Sequences can be stored in the controller (data specified in Figure 99) and be selected as part of a recipe or manually through a Honeywell operator interface.

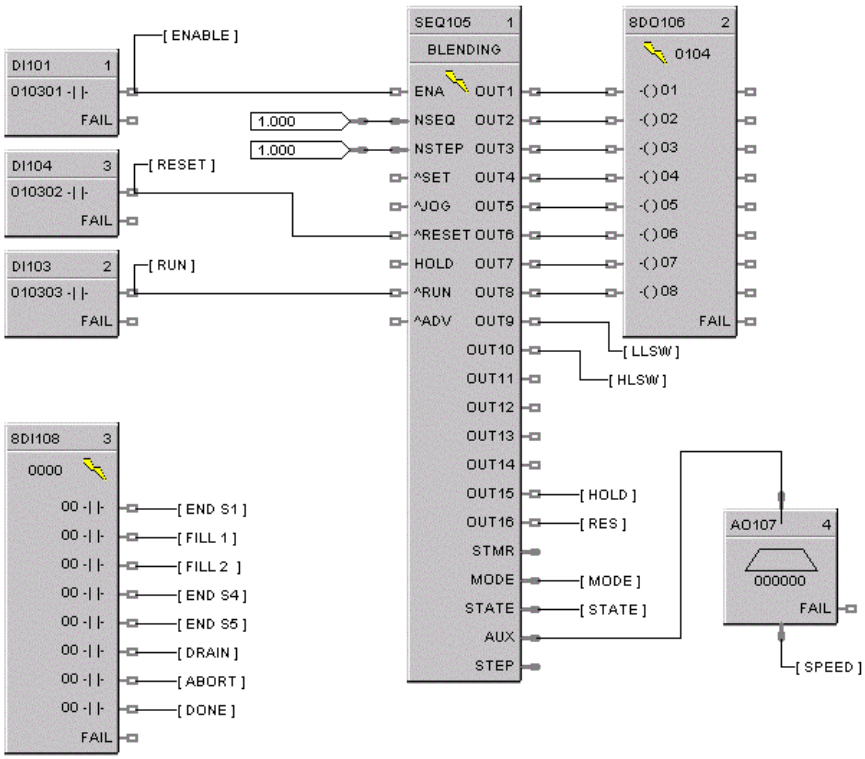

Figure 97 Sequencer function block example - Part 1

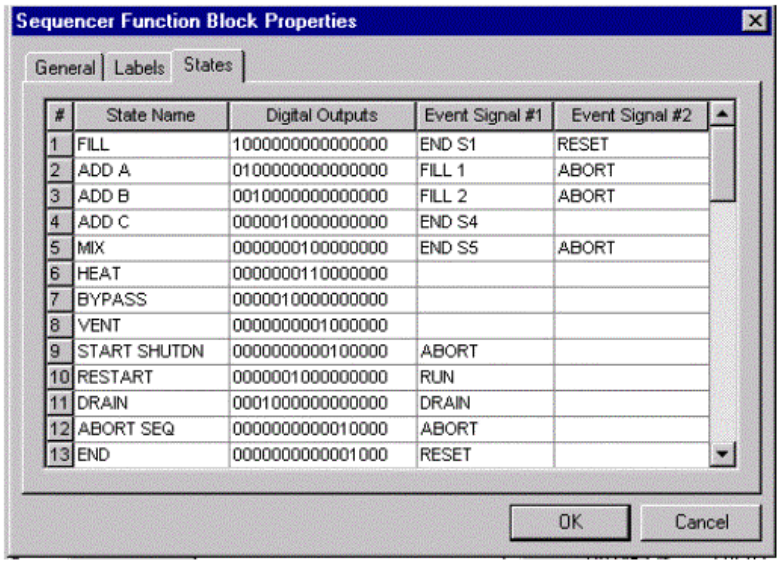

Sequencer Function Block Properties

General | Labels | States

#	State Name	Digital Outputs	Event Signal #1	Event Signal #2
1	FILL	1000000000000000	END S1	RESET
2	ADD A	0100000000000000	FILL 1	ABORT
3	ADD B	0010000000000000	FILL 2	ABORT
4	ADD C	0000010000000000	END S4	
5	MIX	0000000100000000	END S5	ABORT
6	HEAT	0000000110000000		
7	BYPASS	0000010000000000		
8	VENT	0000000001000000		
9	START SHUTDN	0000000000100000	ABORT	
10	RESTART	0000001000000000	RUN	
11	DRAIN	0001000000000000	DRAIN	
12	ABORT SEQ	0000000000010000	ABORT	
13	END	0000000000001000	RESET	

OK Cancel

Figure 98 Sequencer function block example - Part 2

Sequence: 'GREEN G' 'GREEN GLOP'

Step	State	State Name	Time in Step	Time Next Step	Event 1 Next Step	Event 2 Next Step	Advance Next Step	Aux. Value
1	1	FILL	3	2	2	12	2	25
2	2	ADD A	0	3	3	12	3	25
3	3	ADD B	0	4	4	12	4	25
4	5	MIX	10	5	0		5	75
5	6	HEAT	30	6	0	12	6	25
6	4	ADD C	0	0	7	0	7	25
7	5	MIX	5	8	0	0	8	95
8	6	HEAT	25	9	0	0	9	95
9	8	VENT	10	10	0	0	10	25
10	7	BYPASS	5	11	0	0	11	25
11	5	MIX	2	12	0	0	12	25
12	6	HEAT	15	13	0	0	13	25
13	11	DRAIN	0	14	13	0	14	0
14	13	END	0	0	0	0	1	0
15	12	ABORT SEQ	0	16	0	0	16	0

Add Delete OK Cancel

Figure 99 Sequencer function block example - Part 3

SPEV Setpoint Programming Event Decoder Function Block

Description

The SPEV label stands for Setpoint Programming Events.

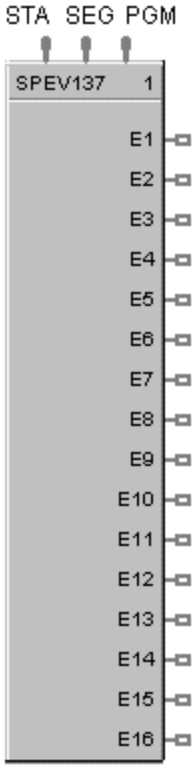

This block is part of the *Setpoint Program* and *Setpoint Scheduler* categories.

Function

Sets up to sixteen digital event outputs that may be ON or OFF on a per segment basis. Inputs include program number, segment number, and program state (READY, RUN, HOLD, GHOLD, STOP) from setpoint program block or setpoint scheduler block.

- If Program Number (PGM) = 0, Segment Number (SEG) = 0, or Program State (STA) is RESET; then: **E1 to E16 = OFF**.
- Otherwise, **E1 to E16 =** as specified in program (PGM), segment (SEG).

Inputs

PGM = Profile number
For SP Programmer - 99
For SP Scheduler - 20
SEG = Segment number (1 to 50).
STA = Program/schedule State (Ready, Run, Hold, Ghold, Stop).

ATTENTION

SPEV inputs must be connected directly to corresponding outputs of SPP (Setpoint Program) or SPS (Setpoint Scheduler) block.

In Stop state, events stay in the state defined in the last segment.

Outputs

E1 = Digital signal - segment event 1
E2 = Digital signal - segment event 2
E3 = Digital signal - segment event 3
E4 = Digital signal - segment event 4
E5 = Digital signal - segment event 5
E6 = Digital signal - segment event 6
E7 = Digital signal - segment event 7
E8 = Digital signal - segment event 8
E9 = Digital signal - segment event 9
E10 = Digital signal - segment event 10
E11 = Digital signal - segment event 11
E12 = Digital signal - segment event 12
E13 = Digital signal - segment event 13
E14 = Digital signal - segment event 14
E15 = Digital signal - segment event 15
E16 = Digital signal - segment event 16

Block properties

Double click on the function block to access the function block properties dialog box.

Example

Figure 100 shows a function block diagram using a SPEV function block to provide event outputs for a setpoint programmer.

The SP programmer event output status may be directed to digital outputs, part of control logic, or be directed to signal tags for use anywhere within the control configuration.

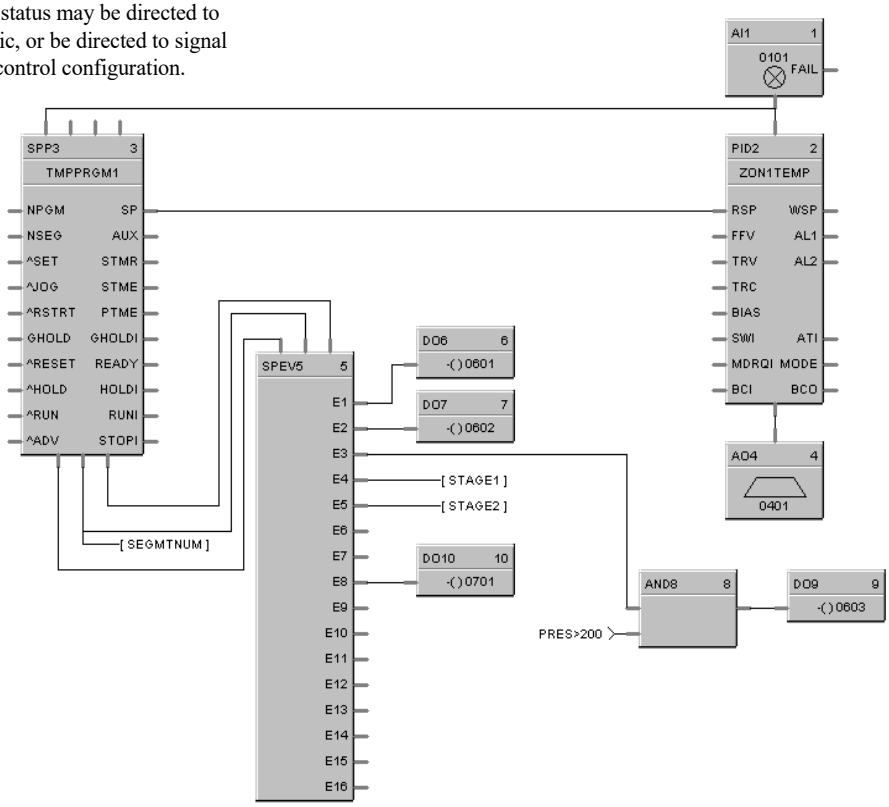

Figure 100 SPEV function block example

SPP Function Block

Description

The SPP label stands for Setpoint Programmer.

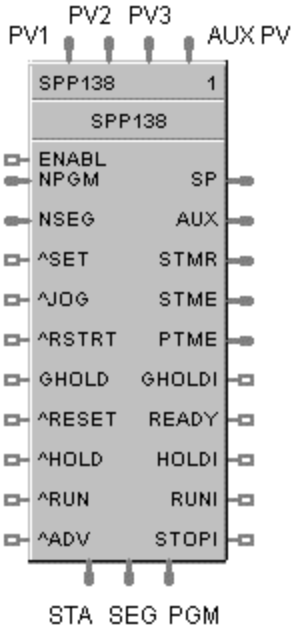

This block is part of the *Setpoint Program* category.

Function

Runs a setpoint ramp/soak program that produces a setpoint output on a time-based profile that is loaded into the block. A single profile may be from 2 to 50 segments in length. Up to 70 profiles are stored in the controller's memory. Each segment of the profile may be a ramp or soak except the last segment must be a soak.

In addition to the main ramp and soak output value, a second (AUX) analog value is available for each step of the program. This output is a fixed soak value that may be used to provide a setpoint value for a secondary control loop in the process. [For example, see *Example 4 - Using the setpoint programmer AUX output (page 420)*.]

A Setpoint guarantee function is provided that holds the program if a process variable exceeds a predefined deviation from setpoint. Selections allow setpoint guarantee to be active for the entire program, for soak segments only, or for user specified segments, or for no segments.

[For example, see Example 1 - PID with setpoint programmer and guaranteed soak *(page 417)*.]

Up to 3 Process Variables may be configured as inputs to the block for setpoint guarantee.

Input

PV1 = Process Variable #1 value in engineering units, for deviation check.

PV2 = Process Variable #2 value in engineering units, for deviation check.

PV3 = Process Variable #3 value in engineering units, for deviation check.

Aux PV = Aux PV for Aux PV Display.

ENABL = Level input to enable the block - only checked in Ready State; input is ignored if not connected.

NPGM = New profile number (1 to 70). See ATTENTION below.

NSEG = New start segment number (1 to 99). When connected, it is used in conjunction with the SET input of the block to set the current segment of the profile to the value of NSEG. See ATTENTION below.

^SET = Pulse input to load NPGM and NSEG numbers. See ATTENTION below.

^JOG = Pulse input to Jog to a predefined segment.

RSTRT = Pulse input for restart action after power interruption [For example, see Example 2 - Duplex control - PID with heat/cool (duplex) output *(page 421)*.]

GHOLD = Guaranteed soak hold - changes program state from RUN to GHOLD when turned ON and GHOLD to run when OFF.

^RESET = Pulse input RESETS program, when turned ON.*

^HOLD= Pulse input puts program in HOLD, when turned ON. Run needed to restart.

^RUN = Pulse input puts program in RUN, when turned ON; except when program is in GHOLD state.

^ADV = Pulse Input for advance of segment.

*For example, see Example 3 - Alternate methods for actuating SP programmer START/HOLD/RESET functions (page 419).

ATTENTION

If either or both NPGM and NSEG are connected directly to analog variables, when that analog variable changes (for example: via a recipe load), then the Setpoint Programmer block will immediately use the new value internally.

If NPGM or NSEG is connected to any other function type then their values are loaded into the SP Programmer only when ^SET goes through a positive transition.

GHold does not function correctly when block (math or switch block) output is connected to SPP block input signal & one of the blocks (math or switch block) input is not connected.

Output

SP = Programmed setpoint value in engineering units

AUX = Second non-ramping auxiliary setpoint output in engineering units. [For example, see *Example 4 - Using the setpoint programmer AUX output (page 420)*.]

STMR = Time Remaining in current segment - in minutes.

STME = Time Elapsed in current segment - in minutes.

PTME = Time Elapsed in program - in minutes

GHOLDI = Guaranteed soak hold indication - turns on if PV is outside guaranteed soak band and Guaranteed Soak is enabled.

READY = Program Reset state indication

HOLDI = Program Hold state indication

RUNI = Program Run state indication

STOPI = Program Stop indication (Program Complete)

PGM = Current Profile Number (1 to 99) - connect to PGM input on SPEV block.

SEG = Current Segment Number (1 to 50) - connect to SEG input on SPEV block.

STA = Current program state (RESET, HOLD, RUN, GHOLD, STOP). Connected to STA input of the SPEV block

ATTENTION

The program states are:

- 0 = Until block is first executed after power up
- 1 = Reset
- 2 = Run
- 3 = Hold
- 4 = GHold
- 5 = Stop
- 6 = Disabled

TIP

- If the first step of a profile is a ramp, the program will start the ramp from the value of PV Input 1. If the first step of a profile is a soak, the program will start from the soak value. If consistent starting values are required, begin all profiles with a soak.
- The PV inputs are used to determine PV–SP deviation for guaranteed soak segments.
- Valid program numbers begin with 1. Valid segment numbers begin with 1.
- The GHOLD output is not affected by the status of the GHOLD input.
- The RST, HLD, RUN, JOG, ADV, SET, RESTART inputs are activated only when the respective input changes from OFF to ON. A maintained ON input has no different affect than a pulsed ON input (that is, it has no effect until it turns OFF and then back ON again).
- The program may be changed (with some exceptions) from the current state to a new state by the operator as well as by inputs to the SPP block. Table 108 lists the resulting states.
- Concerning changing program state, if more than one function block input is on in the same execution cycle, RESET has priority over HOLD and RUN, and GHOLD has priority over RUN.
- Also, function block inputs will override inputs from the Operator Panel that occur during the same execution cycle. And finally, state changes from the Operator Panel are processed on the basis of the “last change wins.”
- At the beginning of a segment, STME will be 0 for one execution cycle to permit start of segment detection by other blocks.

- At the end of a segment, STMR will be 0 for one execution cycle to permit end of segment detection by other blocks.
- If RESTART is On, the block will use PV1 as a starting value and ramp at Restart Rate back to the last SP value, then complete the remaining portion of the segment. Restart Rate is a property of the profile (program)
- “Fastforward” (i.e. Verify) is initiated through the operator interface. It is not an input pin. Fastforward is a way to check for proper functioning of the profile’s events and outputs, without having to wait for the profile to execute at its normal speed. When FASTFORWARD is ON, the program will run at a speed 60 times faster. When FASTFORWARD is OFF, the program will run at normal speed.
- You must end with a Soak segment.
- Events remain in their last configured state at program end.
- A Reset will place the SPP in Ready mode and Reset all Event outputs.
- If Restart pin is connected, must enter a value into Profile Restart Rate. If left = 0 profile will not proceed.

Table 108 SPP inputs and current state

Input	Current State				
	RESET	**HOLD**	**RUN**	**GHOLD**	**STOP**
RESET	RESET	RESET	RUN	RESET	RESET
HOLD	HOLD	HOLD	HOLD	HOLD	STOP
RUN	RUN	RUN	RUN	GHOLD	STOP
GHOLD	RESET	HOLD	GHOLD	GHOLD	STOP

Restart scenario options

Table 109 Restart scenario options

1	No Action taken	Program will start at the point where it was prior to power down.
2	Use the Restart feature of the Setpoint Programmer with a configurable Ramp Rate.	This feature will use the PV (connected to PV1) as the initial starting point for the Setpoint and will use a configurable ramp rate for the profile. When the temperature gets to the original Setpoint prior to power down, the program will continue. ***See Figure 105, Scenario A.***
3	Use the Restart feature of the Setpoint Programmer with a configurable Ramp Rate and use a compare function so that the restart will apply only after a certain time.	You may gate this Restart input to the programmer to only apply after a certain time off and/or a certain segment if desired using Compare function blocks. ***See Figure 105, Scenario B.***

ATTENTION

Be sure to configure the Restart Ramp Rate when a controlled restart is being configured. If not the default value of 0 will cause the programmer to freeze.

Block properties

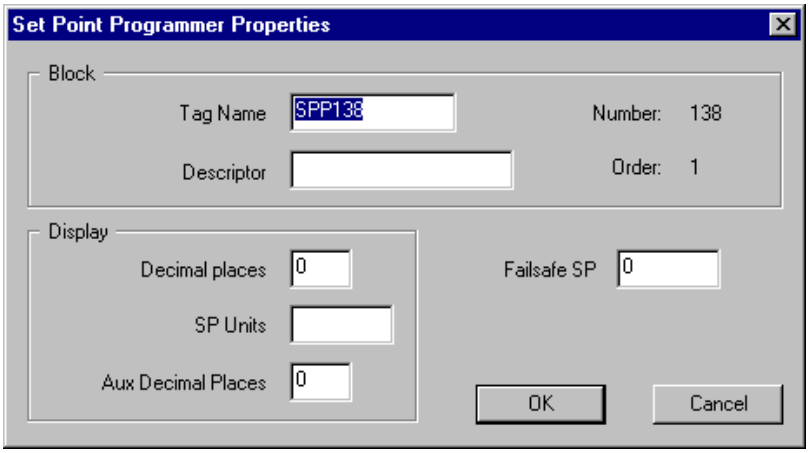

Double click on the function block to access the function block properties dialog box.

Configuration parameters

Table 110 SPP configuration parameters

Properties Group	Parameter	Index #	Parameter Description	Value or Selection
Block	**Tag Name**	N/A	32-characters unique tag name (ASCII characters only)	Up to 32-characters
	Descriptor	N/A	Block descriptor	Up to 32-characters
Display	**Decimal Places**	N/A	Number of places to display after the decimal point	0-5
	SP Units	N/A	Engineering unit descriptor	6 characters
	Aux Decimal Places	N/A	Number of places to display after the decimal point	4 Characters
Failsafe SP	**Failsafe Setpoint**	0	Failsafe Setpoint Value	–99999 to 99999 Engineering Units

Example 1 - PID with setpoint programmer and guaranteed soak

Guaranteed Soak is configured as part of the SET POINT PROFILE configuration using the Control Builder Software or from the UDC 800 Operator Interface, Set Point profile EDIT /DETAIL display. This can be applied to all soaks, selected soaks or all segments.

This example uses the loop PV as the deviation check input vs. the SP output. The user has the option of using 3 more PV's for expanding the deviation check requiring all inputs to be within the band before the Hold is released.

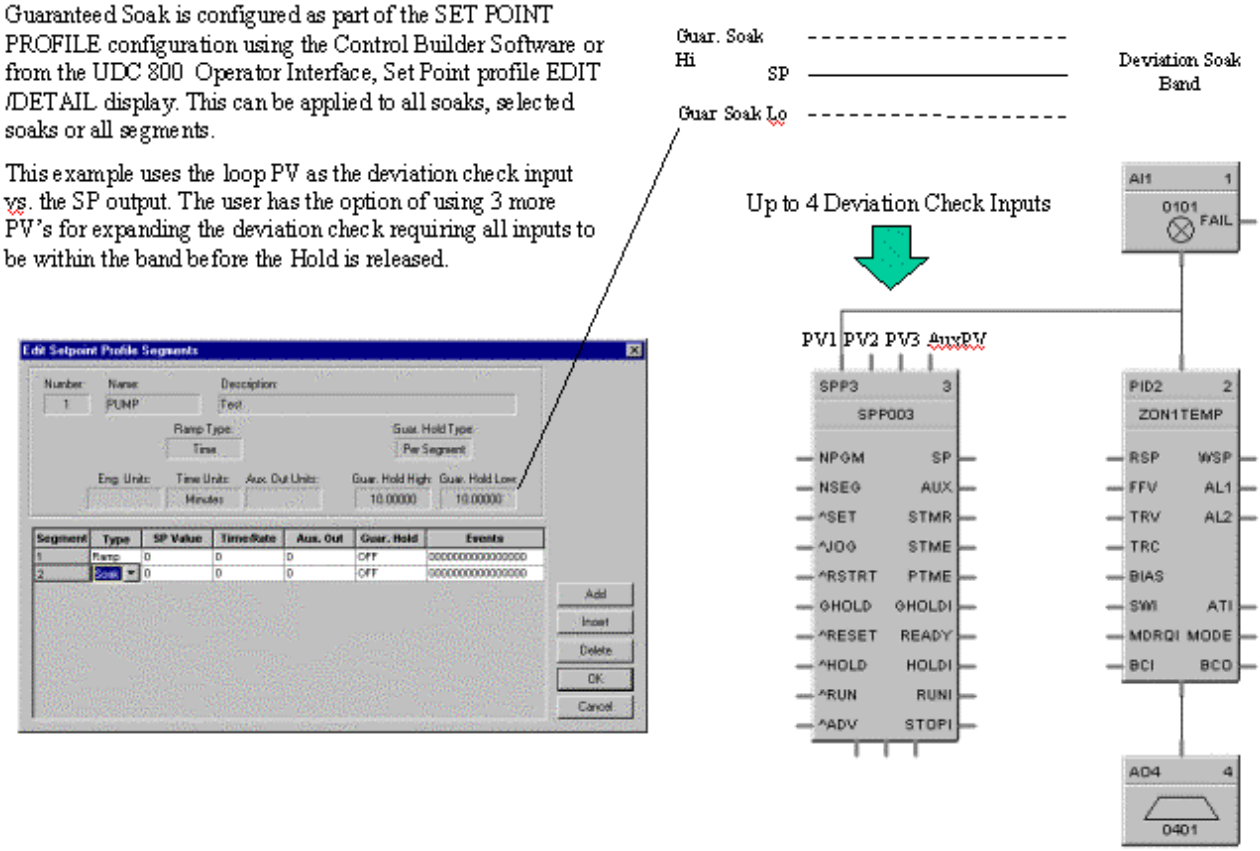

Figure 101 PID with setpoint programmer and guaranteed soak

Example 2 - PID with setpoint programmer and event outputs

The SP programmer event output status may be directed to digital outputs, part of control logic, or be directed to signal tags for use anywhere within the control configuration.

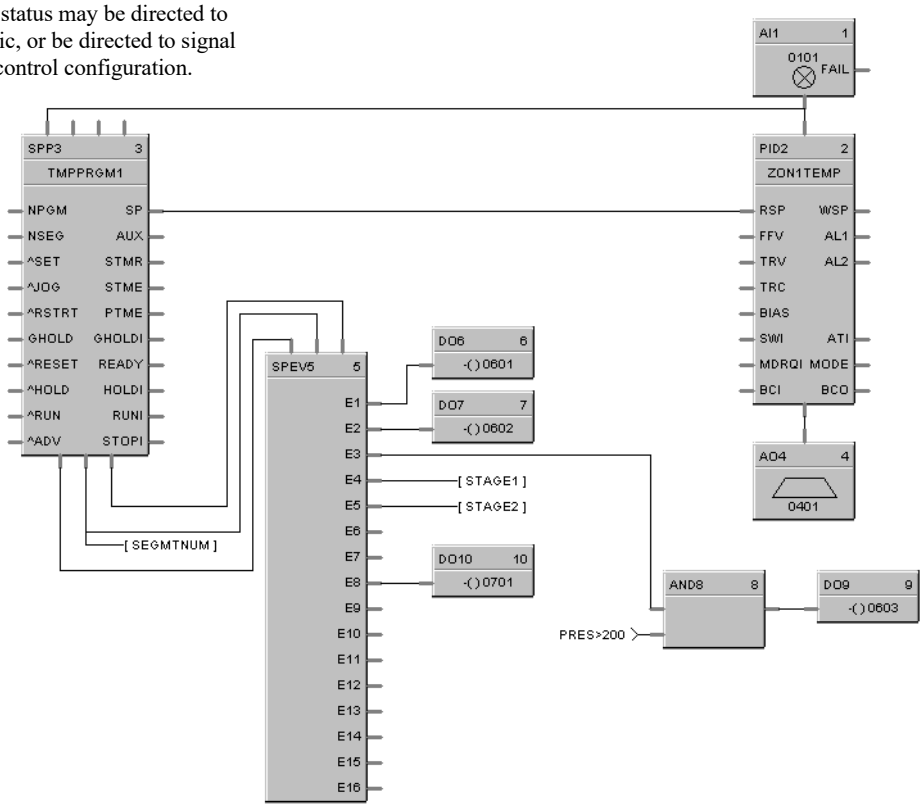

Figure 102 PID with setpoint programmer and event outputs

Example 3 - Alternate methods for actuating SP programmer START/HOLD/RESET functions

Two methods are shown

The pushbutton block will tie this function to the Pushbutton screen display. Pushbuttons will provide a one-shot output each time they are pressed.

Using the Digital variable block this function can be displayed on the OVERVIEW display.

Note: Since Digital variables are turned ON and OFF from the overview display, once turned ON they must be manually turned OFF, to be used a second time.

Note: Control Builder Software will not allow the output of two block to be tied together.

Connections are shown for DEMO only of an alternative connection.

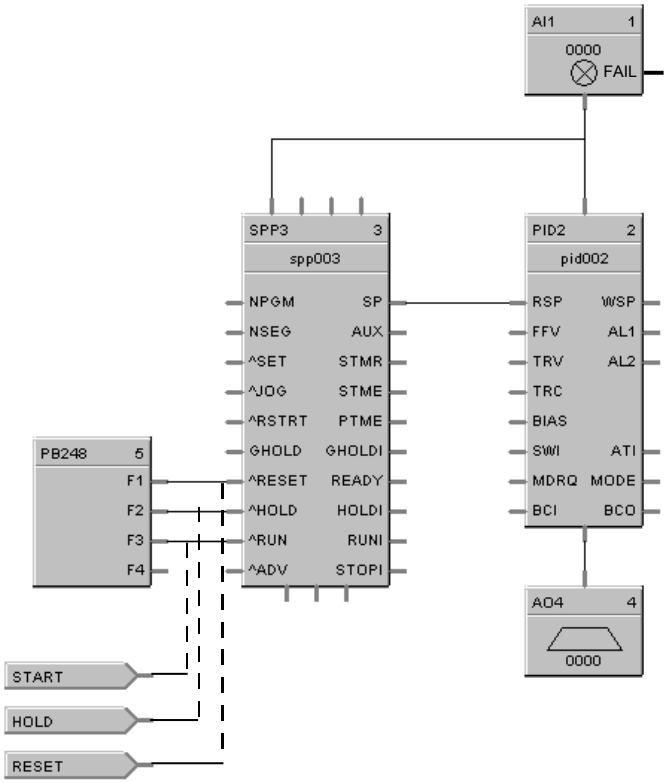

Figure 103 Alternate methods for actuating SP programmer START/HOLD/RESET functions

Example 4 - Using the setpoint programmer AUX output

The Auxiliary output of the Set Point Programmer (SPP) block can be used to drive the RSP of a secondary PID control block on a level basis. This precludes the use of another SPP block. A different (or same) set point can be configured for each programmer step. This can be used to program pressure, %C, etc. for a second control loop. Both PID loops can be shown on the same SP Programmer display. The PV for the secondary PID block is connected to the top right pin of the SPP block to allow view of the PV on the SP Programmer display.

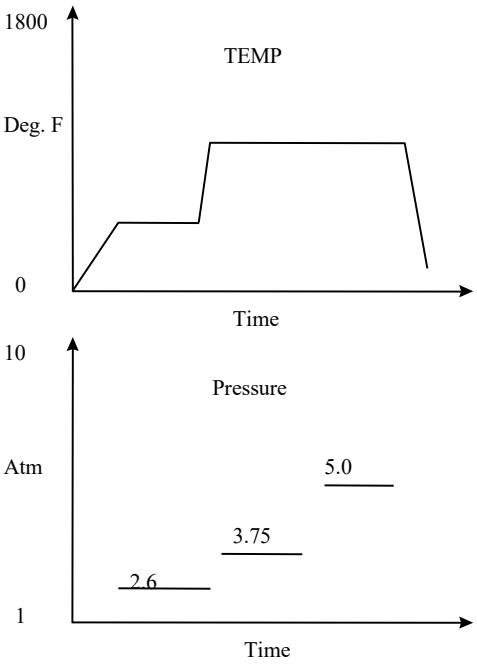

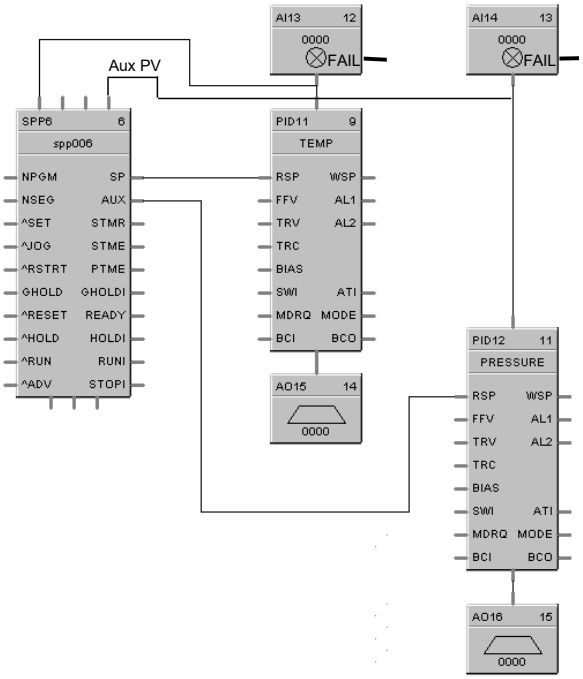

Figure 104 Using the setpoint programmer AUX output

Example 5 - Controlled Restart after Power Loss

SCENARIO A

To prevent stress to the work in a furnace on power up after a power loss, you may use the Restart feature of the SP programmer. This feature will use the PV (connected to PV1) as the initial starting point for the Setpoint and will use a configurable ramp rate for the profile. When the temperature gets to the original Setpoint prior to power down, the program will continue. You may gate this Restart input to the programmer to only apply after a certain time off and/or a certain segment if desired using Compare function blocks.

This example uses the System Monitor block to provide a restart pulse to the programmer Restart input after power restore. This will initiate the restart procedure.

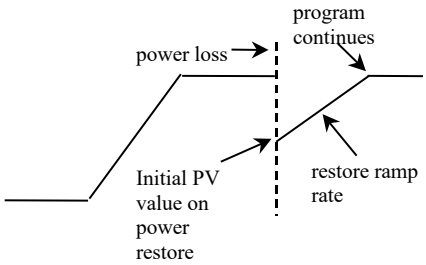

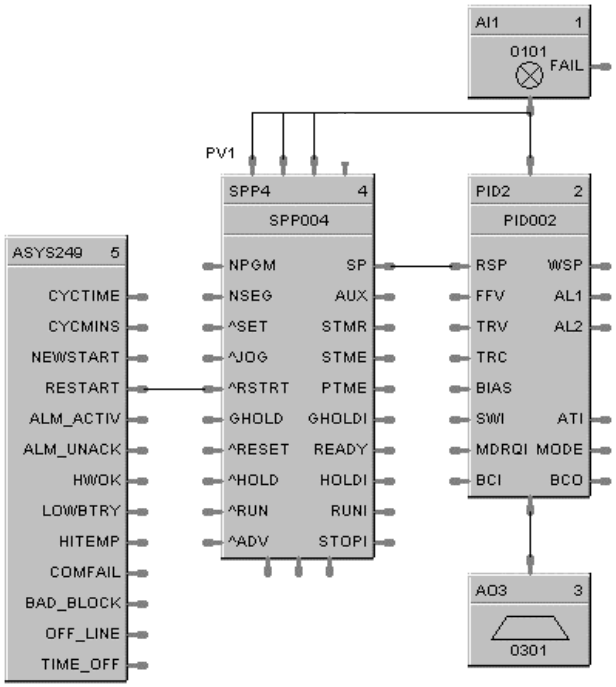

SCENARIO B

A System Monitor block output (RESTART) is on for the first scan cycle after a power loss plus TIME_OFF output indicates the time the power has been off. A Compare block can be used to evaluate the time off and cause an output to initiate the restart if greater than a set amount.

Time Off is in seconds.

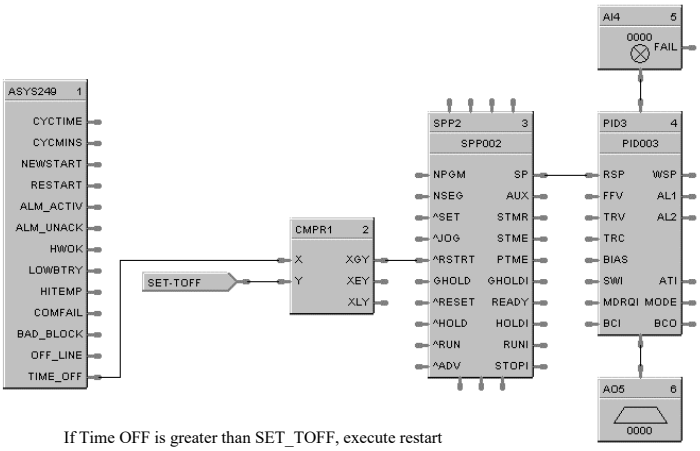

If Time OFF is greater than SET_TOFF, execute restart
NOTE: Execution sequence relative to SPP block

Figure 105 Controlled restart after power loss

SPS Setpoint Scheduler Function Block

Description

The SPS label stands for Master Setpoint Scheduler.

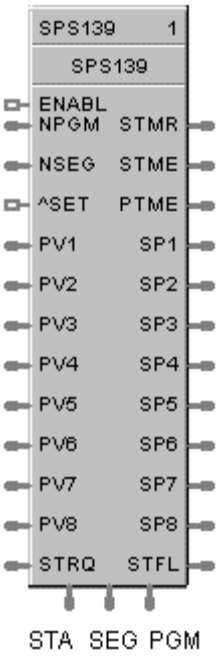

This block is part of the *Setpoint Scheduler* category.

Overview

The objective of the Setpoint scheduler is to provide a sequence of multiple setpoint outputs (both analog and digital) which are referenced to a common time base. Five setpoint schedule block types will be implemented:

Master Setpoint Scheduler Block (SPS)

Auxiliary Setpoint Block (SPSA)

Digital Event Block (SPEV)

State Switch Block (STSW)

State Flags Block (STFL)

A suite of Setpoint Scheduler blocks is comprised of one master Setpoint Block (required) and optionally, one Digital Event, one Auxiliary Setpoint, one State Switch, and/or one State Flags block.

SPS Block Function

The Master (SPS) block supports up to 8 ramp or soak outputs operating on a common time base. It accepts one PV for each setpoint. Setpoint guarantee is provided for the master (SPS) block setpoints with a single symmetrical value for each setpoint output. You can assign a failsafe value for each setpoint.

Inputs

ENABL=Level input to enable the block. Only checked in ready state.
Input is ignored if not connected.

NPGM = Program Number (when SET is ON). See ATTENTION below.

NSEG = Starting Segment Number (when SET is ON). See ATTENTION below.

^SET = Pulse Input to load NPGM and SEG numbers. See ATTENTION below.

PV1 = 1st Process Variable

PV2 = 2nd Process Variable

PV3 = 3rd Process Variable

PV4 = 4th Process Variable

PV5 = 5th Process Variable

PV6 = 6th Process Variable

PV7 = 7th Process Variable

PV8 = 8th Process Variable

STRQ = for connection to the STQR output of the STSW function block. (See Figure 106.) The STSW block encodes discrete inputs to a form that will convey change mode requests from the STSW block:

0.0	No Change
1.0	Jog State
2.0	Guaranteed Hold State
4.0	Reset State
8.0	Hold State
16.0	Run State
32.0	Advance state

ATTENTION

If either or both NPGM and NSEG are connected directly to analog variables, when that analog variable changes (for example: via a recipe load), then the Setpoint Scheduler block will immediately use the new value internally.

If NPGM or NSEG is connected to any other function type then their values are loaded into the SP Scheduler only when ^SET goes through a positive transition.

Outputs

PGM = Current Program Number
SEG = Current Segment number
STA = Program State (Reset, Run, Hold, Ghold, Stop).
SP1 = Setpoint #1 Output (EU)
SP2 = Setpoint #2 Output (EU)
SP3 = Setpoint #3 Output (EU)
SP4 = Setpoint #4 Output (EU)
SP5 = Setpoint #5 Output (EU)
SP6 = Setpoint #6 Output (EU)
SP7 = Setpoint #7 Output (EU)
SP8 = Setpoint #8 Output (EU)

Block properties

Double click on the function block to access the function block properties dialog box.

Dialog box structure

The SPS properties dialog box is divided into four tab cards

TAG/FAILSAFE
MAIN OUTPUT LABELS
AUXILIARY OUTPUT LABELS
EVENT LABELS

Click on the tab to access the properties for that tab.

TAG/FAILSAFE tab

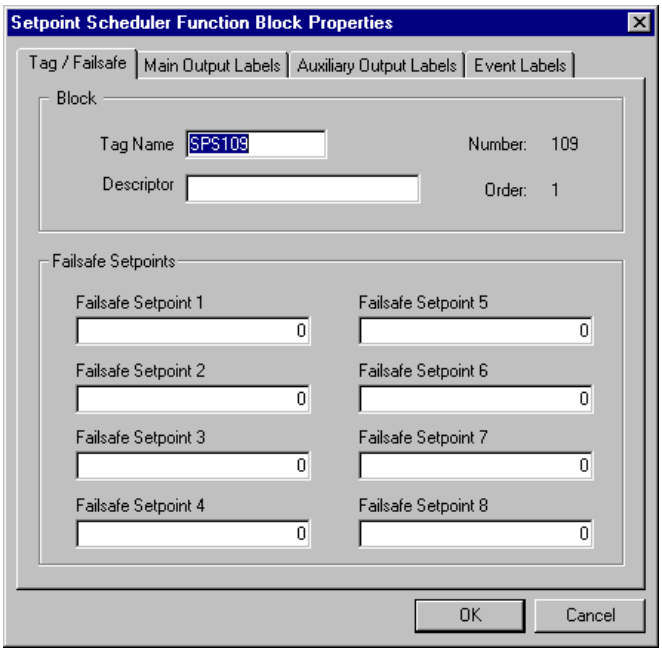

Double click on the function block to access the function block properties dialog box.

Table 111 Tag/Failsafe configuration parameters

Properties Group	Parameter	Index #	Parameter Description	Value or Selection
Block	**Tag Name**	N/A	32-characters unique tag name (ASCII characters only)	Up to 32-characters
	Descriptor	N/A	Block descriptor	Up to 32-characters
Failsafe Setpoints	**SP 0 thru 8**	0	Failsafe Setpoint 1 thru 8 Failsafe Value is the initial value when exiting the program mode. Default Failsafe value is 0.0.	Value in EU

MAIN OUTPUT LABELS tab

It lets you set up labels for *Main Outputs* in the Setpoint Schedule to be displayed on the Operator Interface. Enter Label names, Units(eu), and Decimal places

Table 112 describes the parameters and the value or selection.

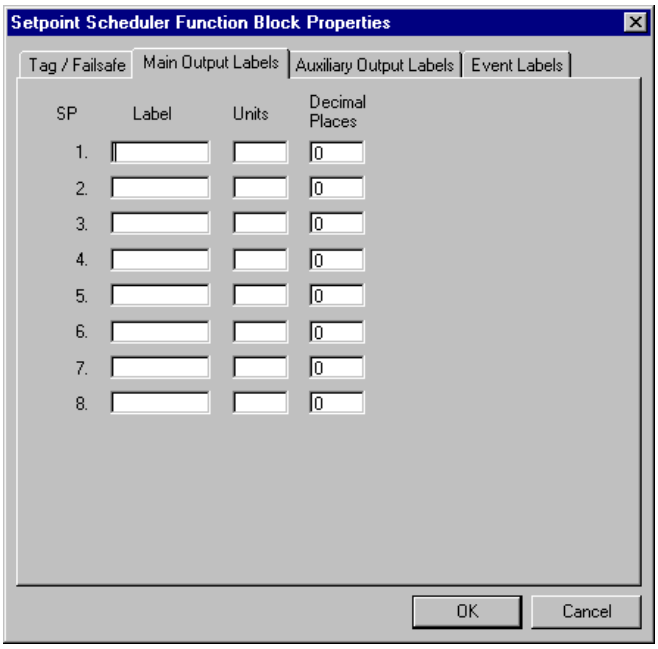

Double click on the function block to access the function block properties dialog box.

Table 112 Main Output labels configuration parameters

	Parameter	Index #	Parameter Description	Value or Selection
SP **SP1 thru SP8**	**Label**	N/A	Label name for Operator Interface	8 characters max.
	Units	N/A	Units for Operator Interface	4 characters max.
	Decimal Places	N/A	Decimal places for operator Interface	0 - 4

AUXILIARY OUTPUT LABELS tab

It lets you set up labels for *Auxiliary Outputs* in the Setpoint Schedule to be displayed on the Operator Interface. Enter Label names, Units(eu), and Decimal places

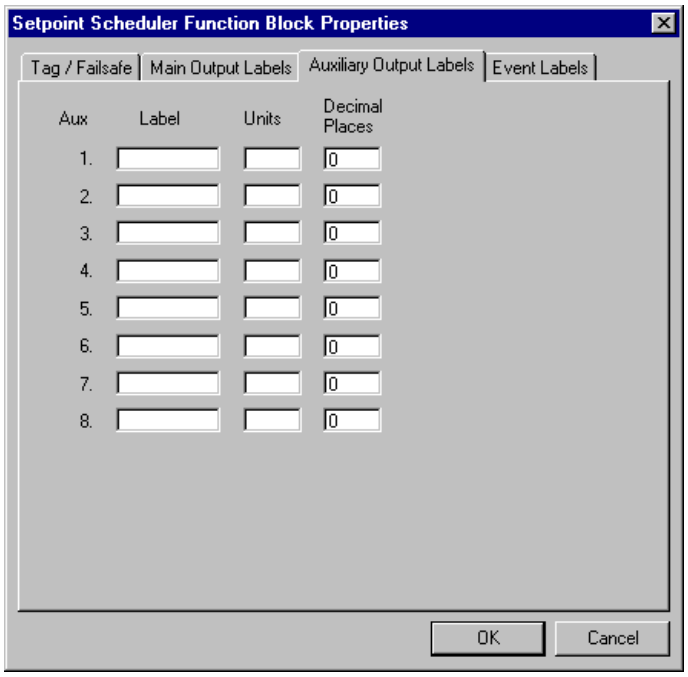

Table 113 Auxiliary Output labels configuration parameters

	Parameter	Index #	Parameter Description	Value or Selection
AUX **AUX1 thru AUX8**	**Label**	N/A	Label name for Operator Interface	8 characters max.
	Units	N/A	Units for Operator Interface	4 characters max.
	Decimal Places	N/A	Decimal places for operator Interface	0 - 4

EVENT LABELS tab

It lets you set up labels for *Events* in the Setpoint Schedule to be displayed on the Operator Interface. Enter a label title in each field

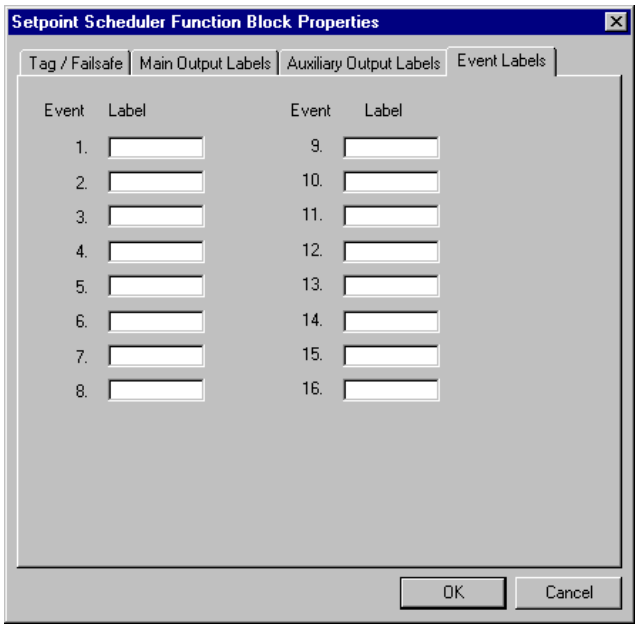

Table 114 Event labels configuration parameters

	Parameter	Index #	Parameter Description	Value or Selection
EVENT **EVENT1 thru EVENT 8**	**Label**	N/A	Label name for Operator Interface	8 characters max.
	Units	N/A	Units for Operator Interface	4 characters max.

Setpoint scheduler example

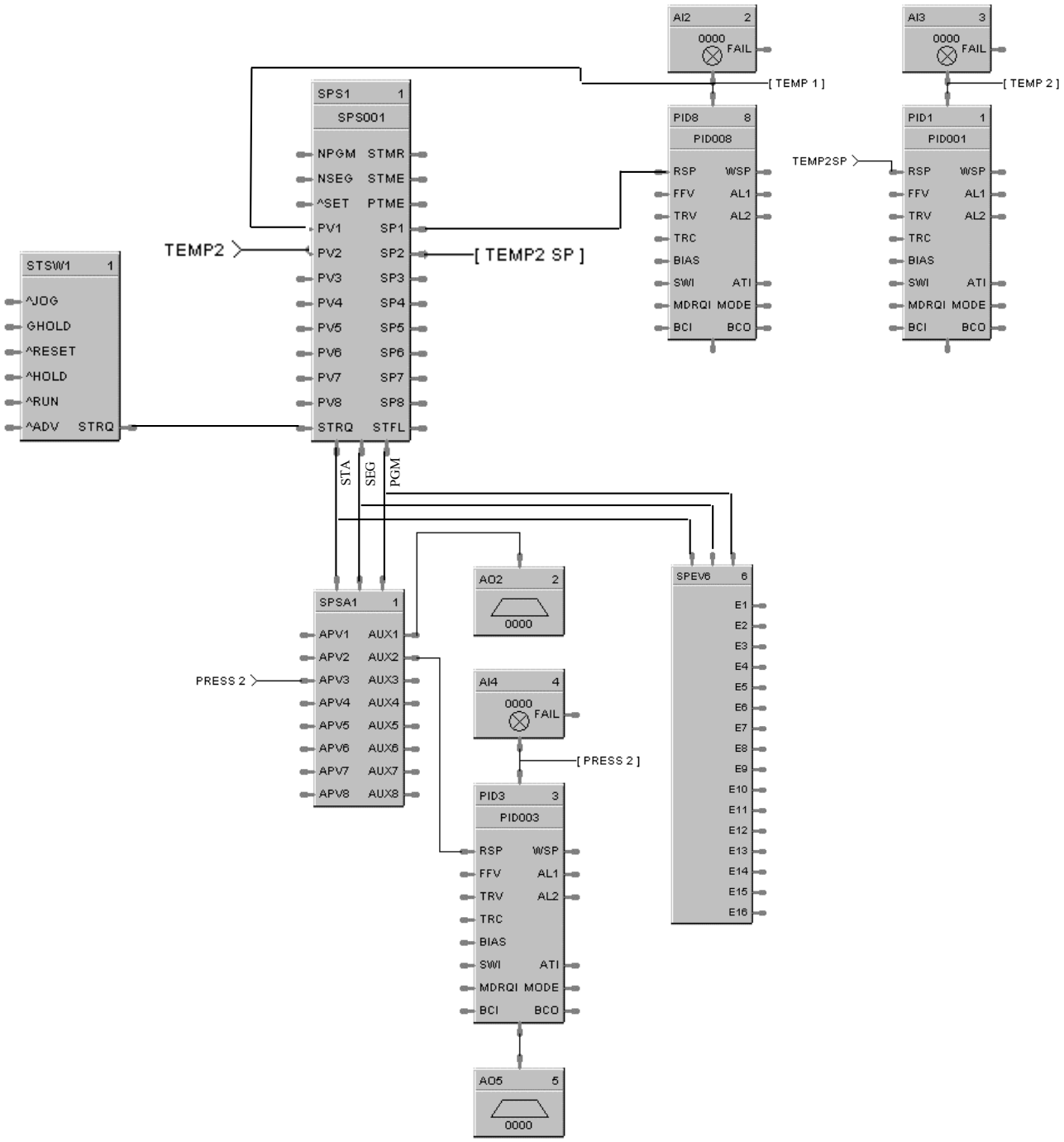

Figure 106 Setpoint scheduler function block suite

SPSA Setpoint Scheduler Auxiliary Setpoint Function Block

Description

The SPSA label stands for Setpoint Scheduler Auxiliary Setpoint Block.

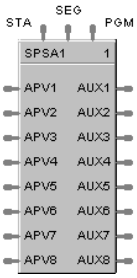

This block is part of the *Setpoint Scheduler* category.

Function

The eight setpoint outputs of the Auxiliary Setpoint block are set to the current step value. The current step is an input to the block and must be connected to the step output of a Master Scheduler block. At the end of a step, the outputs of the device block go directly to the next step value. That is, Ramps are not supported.

Inputs

PGM = Current Program Number

SEG = Current Segment number

STA = Program State (Reset, Run, Hold, Ghold, Stop).

APV1 = 1st Auxiliary Process Variable (EU)
APV2 = 2nd Auxiliary Process Variable (EU)
APV3 = 3rd Auxiliary Process Variable (EU)
APV4 = 4th Auxiliary Process Variable (EU)
APV5 = 5th Auxiliary Process Variable (EU)
APV6 = 6th Auxiliary Process Variable (EU)
APV7 = 7th Auxiliary Process Variable (EU)
APV8 = 8th Auxiliary Process Variable (EU)

Outputs

AUX 1 = Auxiliary Output #1
AUX 2 = Auxiliary Output #2
AUX 3 = Auxiliary Output #3
AUX 4 = Auxiliary Output #4
AUX 5 = Auxiliary Output #5
AUX 6 = Auxiliary Output #6
AUX 7 = Auxiliary Output #7
AUX 8 = Auxiliary Output #8

Block properties

Double click on the function block to access the function block properties dialog box.

Example

Figure 106 shows a Function Block Diagram (Setpoint Scheduler Suite) using a SPSA function block.

SQRT Function Block

Description

The **SQRT** label stands for **Square Root**.

This block is part of the *Calculations* category.

Function

Extracts the square root of the analog input (X) as long as the input is greater than the configured DROPOFF value.

- If X > DROPOFF, then: OUT = square root of X.
- Otherwise, OUT = 0.

Input

X = Analog value for square root extraction

Output

OUT = Square Root value

Block properties

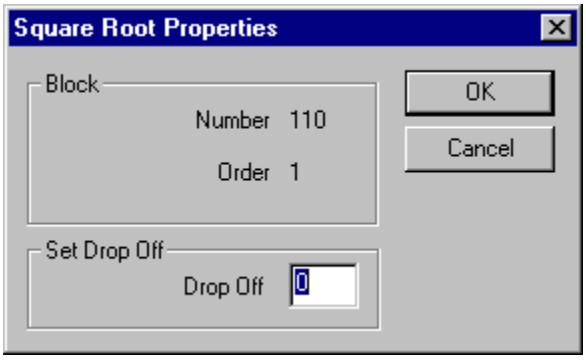

Double click on the function block to access the function block properties dialog box.

Configuration parameters

Table 115 SQRT configuration parameters

Properties Group	Parameter	Index #	Parameter Description	Value or Selection
Set Dropoff	**Dropoff**	0	Minimum Input for Square Root	0 to 99999 Must be set at > = 0

Example

Figure 107 shows a Function Block Diagram using a SQRT function block.

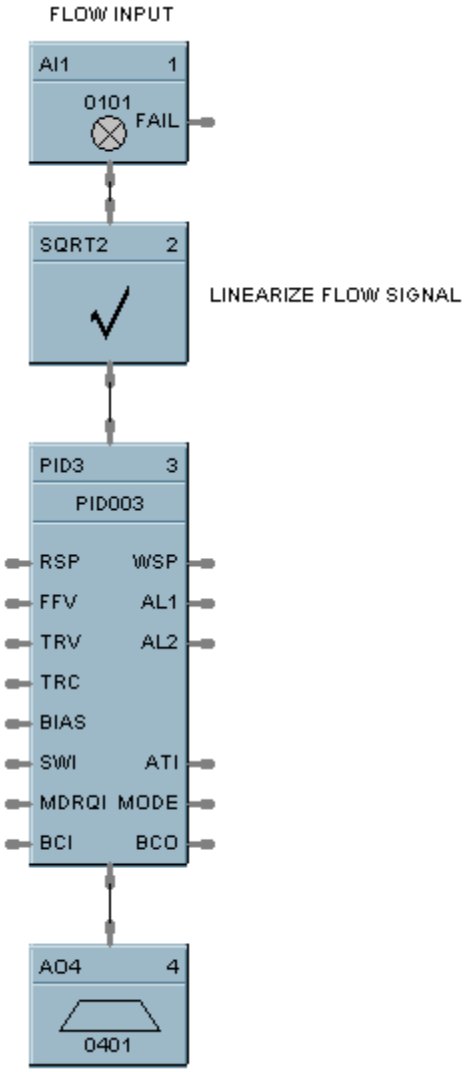

Figure 107 SQRT function block example

STG Stage Function Block

Description

The **STG** label stands for **Stage**.

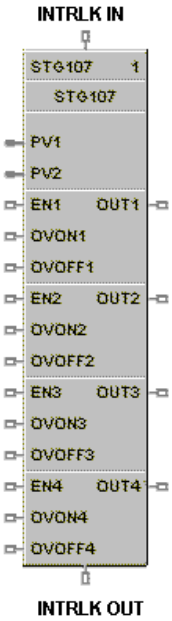

This block is part of the *Auxiliary* category.

Function

The Stage (STG) function block provides differential On/Off control and is typically used to monitor pressure and flow for controlling pumps and operating valves.

There are four individual stages grouped together in the function block. The block monitors from one to two analog inputs (PV1, PV2) which are common to all four stages, compares them for each stage by a configurable comparator, and provides On/Off control outputs for the four stages based on configurable setpoints for each stage. Each stage can be individually enabled and forced ON or OFF (OVON/OVOFF).

Interlocking
Previous interlocking prevents a stage's output from turning ON until the previous stage has turned ON.
Next interlocking prevents a stage's output from turning OFF until the output of the next stage in sequence has turned OFF.

Interlocking is provided for stages where the output of the stage is dependent on the state of the previous and next stage. It also works across sequentially connected function blocks.
In order for interlocking between function blocks to operate, the interlocking Input/Output pin of a STAGE function block must be directly connected (or with a signal tag) to another STAGE function block interlocking Input/Output pin. An improper connection, such as inserting another function block type between two successive Stage blocks, invalidates the interlock signal.

Each configuration is limited to 8 stage function blocks.

The general forcing of outputs is not permitted within this block.

Inputs

PV1 = Analog Input #1 - can be pressure or flow – common to all four stages.

PV2 = Analog Input #2 - can be pressure or flow – common to all four stages.

EN1 – EN4 = ON enables the associated stage. OFF causes the associated request output [OUT1-OUT4] to turn OFF. This condition overrides the OVON/OVOFF inputs. When EN [1-4] turns ON the stage algorithm is reevaluated to determine the state of OUT (request).

OVON1 – OVON4 = Overrides the output of the associated stage [1-4]
ON = override signal to **ON**
OFF = no override

OVOFF1 – OVOFF4 =. Overrides the output of the associated stage [1-4]
ON = override signal to **OFF**
OFF = no override
If both OVON and OVOFF are ON, OVOFF takes precedence.

INTRLK IN = Interlocking signal from previous attached stage function block. (note 1)

Outputs

OUT1 – OUT4 = ON = Stage [1-4] request is ON

INTRLK OUT = Interlocking signal to interlock the 4th Stage of this block to the first Stage of the next block in sequence. (note 1)

Note 1. In cases where two or more stage blocks are tied together, the sequence order should be programmed in an ascending sequence to match the desired order of operation. Failure to maintain sequence could cause multiple scans to be required for sequential operations.

Block properties

The **Stage** properties dialog box is divided into FIVE tab cards:

GENERAL
STAGE 1
STAGE 2
STAGE 3
STAGE 4

Click on the tab to access the properties for that tab.

GENERAL tab

It looks like this graphically.

Table 116 describes the parameters and the value or selection.

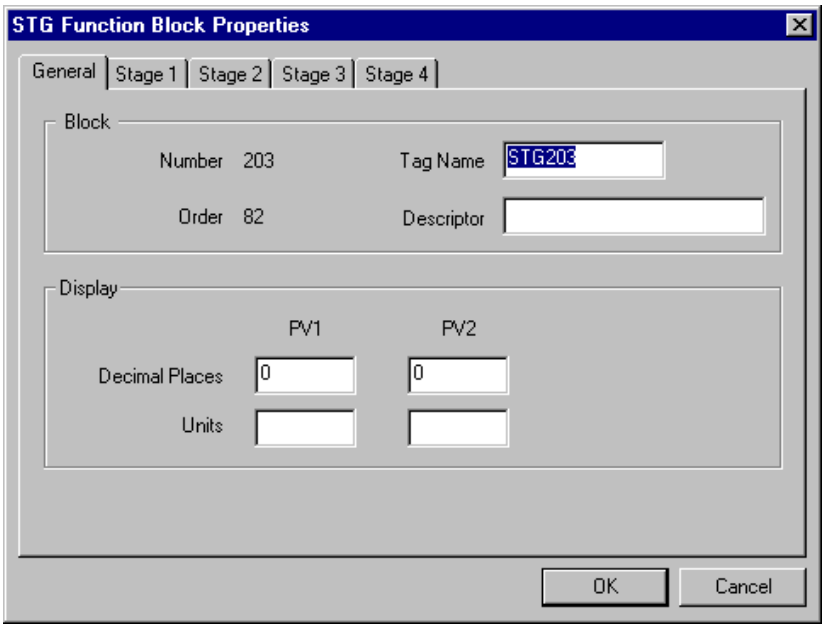

Table 116 STG general tab parameters

Properties Group	Parameter	Index #	Parameter Description		Value or Selection
General	**Tag Name**	N/A	32-characters unique tag name (ASCII characters only)		Up to 32-characters
	Descriptor	N/A	Block description		Up to 32-characters (ASCII characters only)
Display			**PV1**	**PV2**	
	Decimal Places	N/A	Number of decimal places shown on the OI for PV1*	Number of decimal places shown on the OI for PV2*	Range 0 to 5 Enter selection in field
	Units	N/A	Engineering Units for PV1 display	Engineering Units for PV2 display	Four characters maximum Enter characters in field

* Also defines the number of decimal places for the associated SP ON/SP OFF parameter

STAGE tabs

It looks like this graphically. There are four stage tabs, each with the same entry fields. Select the tab for each stage at the top of the dialog box.

Table 118 describes the parameters and the value or selection for each stage.

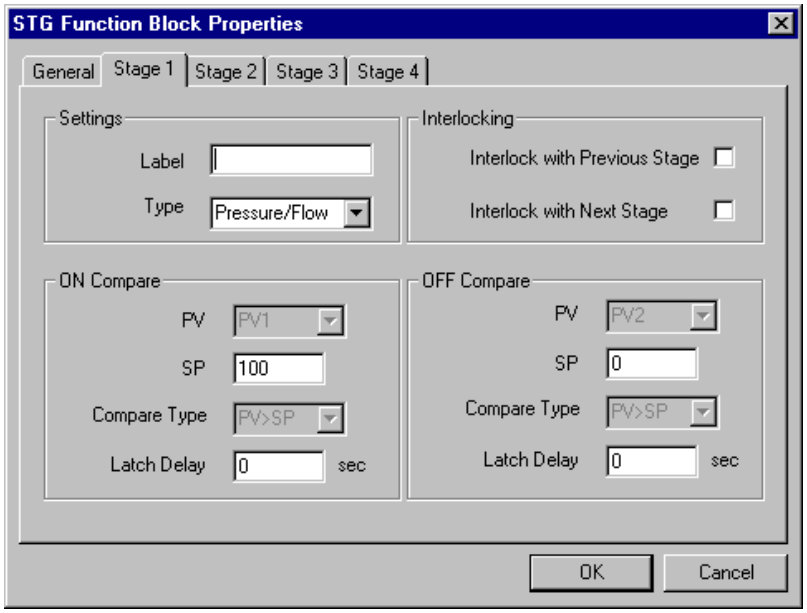

Label

An 8 character label used to identify the specific stage output on the operate displays of the operator interface.

Stage Types

There are four stage types from which to choose:

Pressure/Flow The stage block activates its output as the **PV1 pressure** input increases above the ON setpoint and deactivates the output as the **PV2 flow** input increases above its setpoint.

Pump Down The stage block activates its output as the PV1 input **rises** (activate on rise) above the ON setpoint.

Pump Up The stage block activates its output as the PV1 input **falls** (activate on fall) below the ON setpoint

User Configured The user can select either PV for ON and OFF compare as well as the compare type for their particular application (no restrictions).

Presets

The Stage type selection pre-assigns inputs and Hi/Lo setpoint comparisons as indicated in Table 117. These cannot be altered. The User-configurable type may be used to custom assign PV inputs and setpoint comparison types.

Table 117 Default PV sources and compare type operators

Stage Type	PV_ON =	PV_OFF =	Compare Operator between PV ON and SP ON	Compare Operator between PV OFF and SP OFF
Pressure / Flow	PV1*	PV2*	PV ON > SP ON*	PV OFF> SP OFF*
Pump Down	PV1*	PV1*	PV ON > SP ON*	PV OFF< SP OFF*
Pump Up	PV1*	PV1*	PV ON < SP ON*	PV OFF> SP OFF*
User Configurable	PV1 or PV2	PV1 or PV2	Select from: PV ON > SP ON PV ON ≥ SP ON PV ON < SP ON PV ON ≤ SP ON PV ON = SP ON	Select from: PV OFF > SP OFF PV OFF ≥ SP OFF PV OFF < SP OFF PV OFF ≤ SP OFF PV OFF = SP OFF

*Default – cannot be changed

Table 118 STG Stage Tabs parameters

Properties Group	Parameter	Index #	Parameter Description	Value or Selection
Settings	**Label**	N/A	Unique name for each of the 4 internal stage functions	8 Characters
	Type	N/A	See “Stage Types” for definitions and Table 117 for associated parameters	**Pressure/Flow** **Pump Down** **Pump UP** **User Configured** Default = Pressure/Flow
Interlocking Interlock with Previous Stage ☑		N/A	When set to ON, the current stage is interlocked to the ***previous*** stage	**ON** = Interlock **OFF** = No Interlock Default = OFF
Interlock with Next Stage ☑		N/A	When set to ON, the current stage is interlocked to the ***next*** stage	**ON** = Interlock **OFF** = No Interlock Default = OFF
On Compare	**PV**	N/A	Defines PV1 or PV2 as the source for the comparison to SP ON.	See Table 117 for defaults.
	SP	12 - 15	Setpoint used with ON comparator	No range limits Can be changed from an operator interface
	Compare Type	N/A	Comparison type operator between PV ON and SP ON.	See Table 117 for defaults.
	Latch Delay	28 - 31	Delay prior to latching the output ON	Range: 0 – 99999 seconds
Off Compare	**PV**	N/A	Defines PV1 or PV2 as the source for the comparison to SP OFF.	See Table 117 for defaults.
	SP	16 - 19	Setpoint used with OFF comparator	No range limits Can be changed from an operator interface
	Compare Type	N/A	Comparison type operator between PV OFF and SP OFF.	See Table 117 for defaults.
	Latch Delay	32 - 35	Delay prior to unlatching the output OFF	Range: 0 – 99999 seconds

Example

Figure 108 shows a function block diagram using a STG function block to control tank level by sequencing multiple pumps.

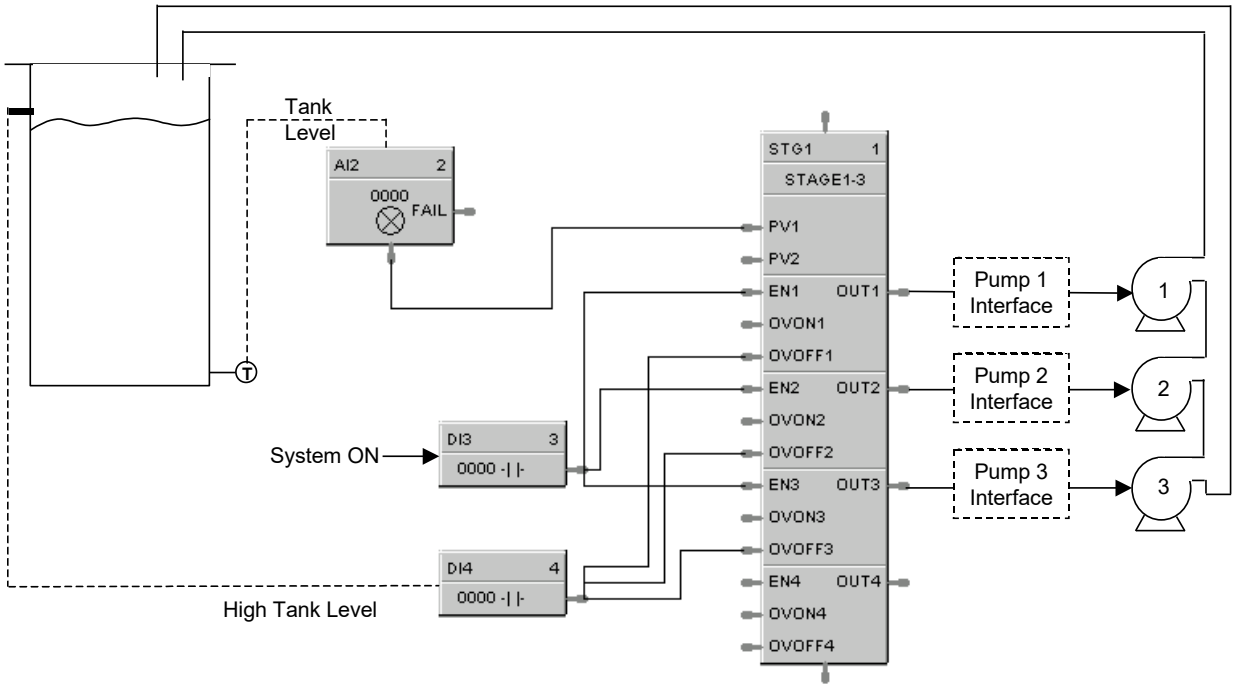

Figure 108 STG function block example

STFL Setpoint Scheduler Stage Flags Function Block

Description

The STFL label stands for the Setpoint Scheduler State Flags.

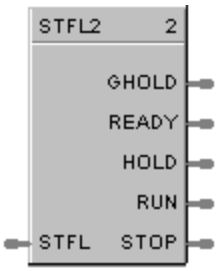

This block is part of the *Setpoint Scheduler* category.

Function

Connects to Master block (SPS) via dedicated connection and provides logic 1(ON) state digital outputs for Scheduler modes. The State Flags block accepts the encoded master block state as an input and produces digital outputs corresponding to the current value of STFL.

Inputs

STFL = this input is connected to the STFL output of the SPS function block. (See Figure 106.)

Outputs

GHOLD = ON if state = 1.0, else OFF

READY = ON if state = 2.0, else OFF

HOLD = ON if state = 4.0, else OFF

RUN = ON if state = 8.0, else OFF

STOP = ON if state = 16.0, else OFF

Block properties

Double click on the function block to access the function block properties dialog box.

Example

Figure 106 shows a Function Block Diagram (Setpoint Scheduler Suite) using a STFL function block.

STRIG Selectable Trigger Function Block

Description

The **STRIG** label stands for Selectable Trigger.

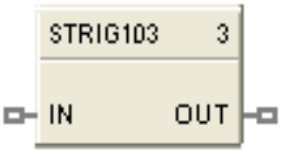

This block is a part of the *Logic* category.

Function

This block allows you to select one of the following input conditions for triggering the digital output.

- The input state changes from OFF to ON.
- The input state changes from ON to OFF.
- Both of the above.

When this block is "triggered" its output will be ON for one cycle.

This block will also allow you to select one of the following initial scan behaviors:

- No trigger action following a Cold Start or Warm Start.
- Trigger the output on the initial scan following a Cold Start; takes precedence over the input pin conditions.
- Trigger the output on the initial scan following a Warm Start; takes precedence over the input pin conditions.
- Trigger the output on the initial scan following a Cold Start or Warm Start; takes precedence over the input pin conditions.

Output of the block can be forced.

Inputs

IN = Input signal

Outputs

OUT = Output signal

Configurable Parameters

Parameter	Index #	Parameter Description	Value or Selection
Block Order		Execution Order for Block	Read Only. To change block order, right-click on a Function Block and select Execution Order.
Tag name	N/A	32-characters unique tag name (ASCII characters only)	Up to 32-characters
Descriptor		Block description	Up to 32-characters
Trigger type	0	Type of input state change that will trigger the output on for one cycle.	On to off Off to on Both (On to off or Off to on)
Initial Scan	1	Type of scan	No trigger Cold Start Warm Start Cold Start and Warm Start

Example

Use the Selectable Trigger function block in combination with an UP/DN Counter function block to count the number of time a process input changed state from Off to ON or ON to OFF or both.

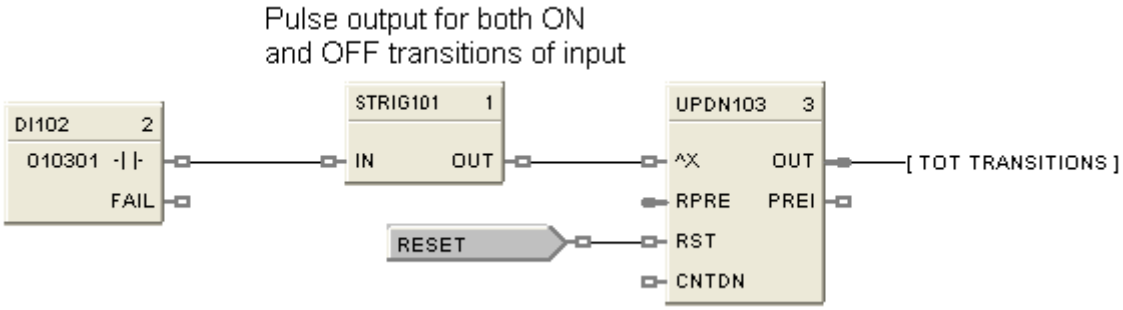

Figure 109 STRIG function block example

STSW Setpoint Scheduler State Switch Function Block

Description

The STSW label stands for the Setpoint Scheduler State Switch.

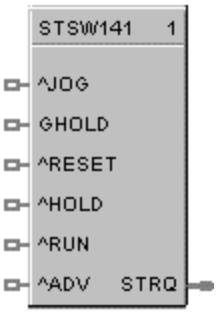

This block is part of the *Setpoint Scheduler* category.

Function

Connects to Master block (SPS) via dedicated connection and accepts digital inputs to cause scheduler mode changes. The State Switch block accepts state request digital inputs and produces an encoded output for input to the master (SPS) block.

Inputs

^JOG = OFF to ON requests JOG state

GHOLD = ON = guaranteed Hold State; ON to OFF and previous state was RUN, then return to RUN mode.

^RESET = OFF to ON requests RESET state

^RUN = OFF to ON requests RUN state

^ADV = OFF to ON requests ADVANCE state

Outputs

STRQ = for connection to the STQR input of the SPS function block. This block encodes discrete inputs to a form that will convey change mode requests to the SPS block:

0.0	No Change
1.0	Jog State
2.0	Guaranteed Hold State
4.0	Reset State
8.0	Hold State
16.0	Run State
32.0	Advance state

Block properties

Double click on the function block to access the function block properties dialog box.

Example

Figure 106 shows a Function Block Diagram (Setpoint Scheduler Suite) using a STSW function block.

SUB Subtraction Function Block

Description

The SUB label stands for the Subtraction mathematical operation (2 Inputs).

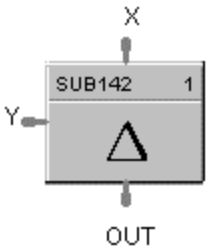

This block is part of the *Math* category.

Function

Subtracts one input (X) from another (Y) to obtain an output.

- OUT = X–Y

Input

X = First analog value

Y = Second analog value

Output

OUT = Calculated Value

Block properties

Double click on the function block to access the function block properties dialog box.

Example

Figure 110 shows a Function Block Diagram using a SUB function block.

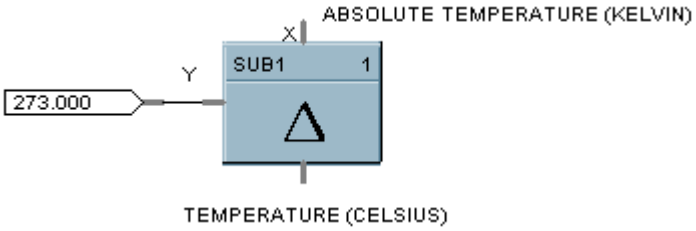

Figure 110 SUB function block example

4SUB Function Block

Description

The 4SUB label stands for the Subtraction mathematical operation (4 Inputs).

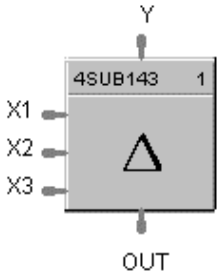

This block is part of the *Math* category.

Function

Subtracts three analog inputs (X1, X2, X3) from Y input to get an output.

Input

X1 = First analog input
X2 = Second analog input
X3 = Third analog input
Y = Fourth analog input (number to subtract from)

> **ATTENTION**
>
> All four inputs must be connected. Unconnected inputs default to zero.

Output

OUT = Calculated Value

Block properties

Double click on the function block to access the function block properties dialog box.

Example

Figure 111 shows a Function Block Diagram using a 4SUB function block.
Y – X1 – X2 – X3 = OUT

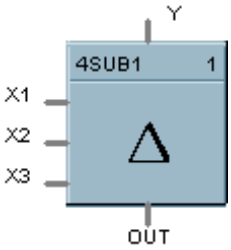

Figure 111 4SUB function block example

SW Analog Switch Function Block

Description

The **SW** label stands for **Analog Switch**.

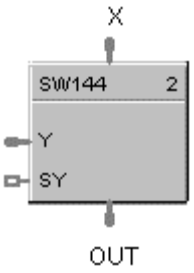

This block is part of the *Signal Selectors* category.

Function

Selects input Y for output when digital input signal (SY) is ON.

- If SY = ON, then; **OUT = Y**
- Otherwise, **OUT = X**

Input

X = First analog value

Y = Second analog value

SY = Where ON selects Y command digital signal.

Output

OUT = Selected value

Block properties

Double click on the function block to access the function block properties dialog box.

Example

Figure 112 shows a Function Block Diagram using an SW function block to select control signal for output.

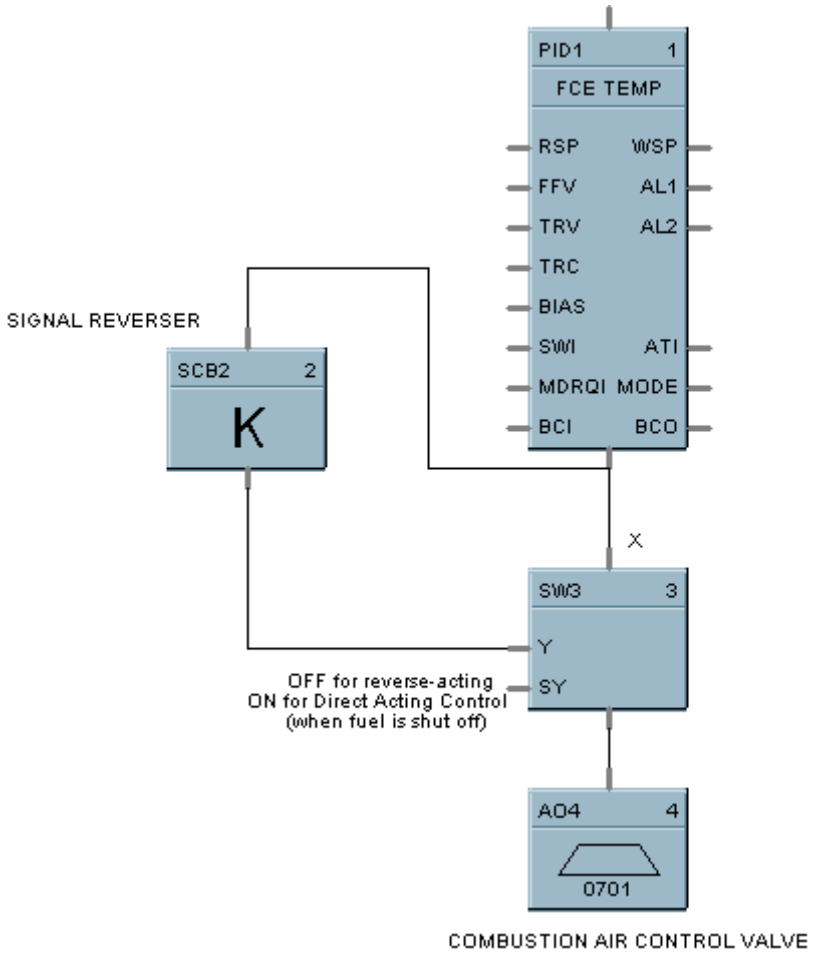

Figure 112 SW function block example

SYNC Function Block

Description

The **SYNC** label stands for **Synchronize**.

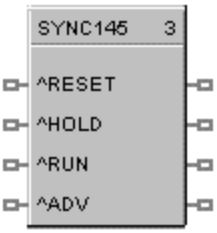

This block is part of the *Setpoint Program* category.

Function

Used to synchronize the operation of two setpoint programs given the run. Hold and reset signals from each program.

Input (available for logic control of programmer)

^RESET = RESET command, when turned ON.

^HLD = HOLD command, when turned ON.

^RUN = RUN command, when turned ON.

^ADV = ADVANCE command, when turned ON

Output

The status of each programmer connected to the output pins of the block are monitored. A change in state of any of the programmers is transferred to the other programmers. This occurs regardless of input pin connections. Use of block inputs is optional.

ATTENTION

Ghold status is not transferred between programmers with this block.

Block properties

Double click on the function block to access the function block properties dialog box.

Example

Figure 113 shows a Function Block Diagram using a SYNC function block.

Function: Synchronizes changes in setpoint program state for multiple SPP function blocks when the state of any connected SPP is changed from the Operators Panel or via a remote connection. (Analog and digital I/O blocks required to complete this function are not shown.)

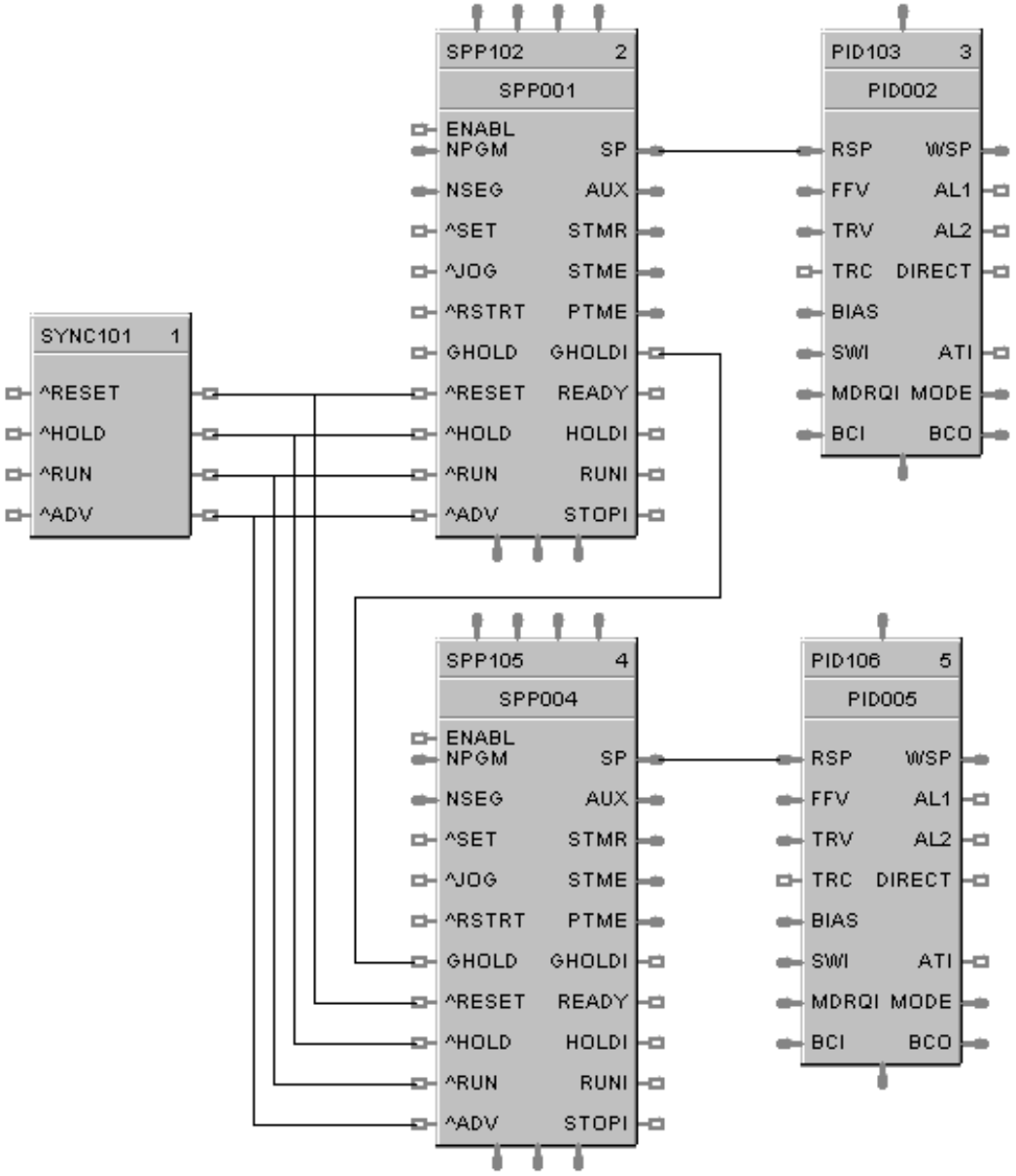

Figure 113 SYNC function block example

TAHD Track and Hold Function Block

Description

The **TAHD** label stands for **Track and Hold.**

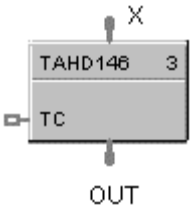

This block is part of the *Auxiliary* category.

Function

Provides an output that tracks the value of the input (X), when a digital input signal (TC) is On; or when TC is OFF, holds output at last value of X.

- If TC = ON, then: OUT = X (TRACK)
- If TC = OFF, then: OUT = Last value of X (HOLD)

Input

TC = Track command signal, when turned ON.
X = Value to be tracked.

Output

OUT = track and hold value of X

Block properties

Double click on the function block to access the function block properties dialog box.

Example

Figure 114 shows a function block diagram using a TAHD function block to track the Input signal for a PID control loop in conjunction with a digital input.

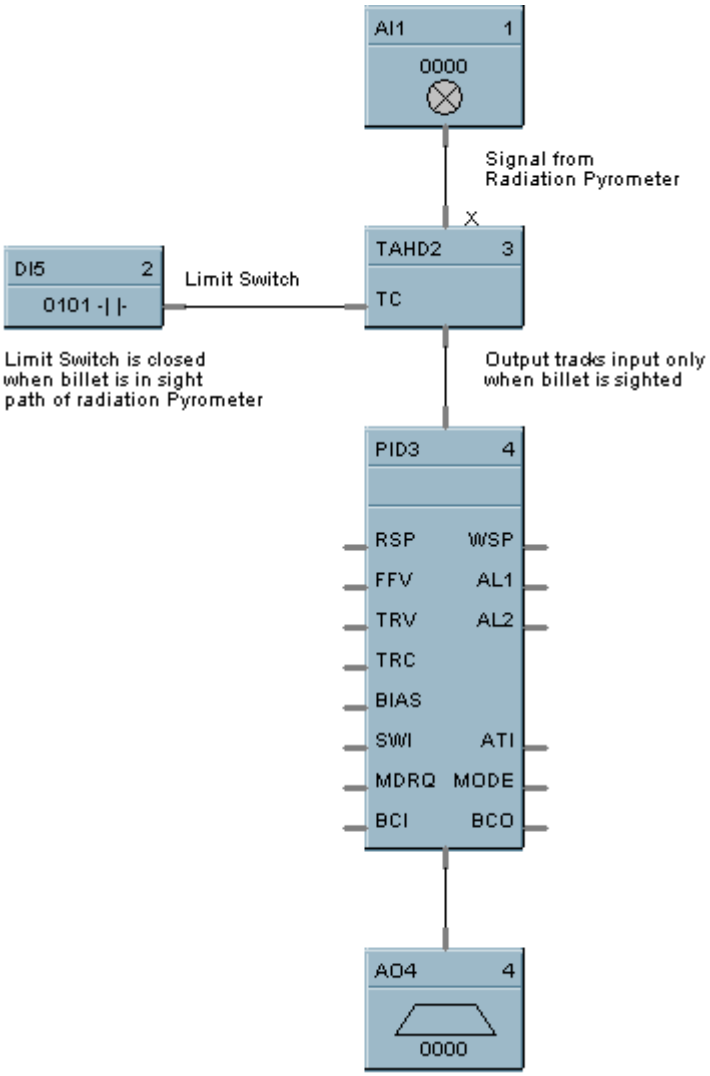

Figure 114 TAHD function block example

TCPR Function Block

Description

The **TCPR** label stands for **Modbus/TCP Read.** This block is part of the *Communications* category. It looks like this graphically.

Function

A communication function block that expands the read capability of the Modbus/TCP Device function block to 16 additional data points. Multiple blocks may be connected to the same Modbus/TCP Device block.

The Modbus/TCP read block has no inputs and 16 outputs. Up to 16 registers can be configured as the source of data for the outputs.

The configuration data for each point will consist of:

- the address of the source device on the Modbus link,
- the register address of the desired data,
- and the register type: Integer, Float, or Bit Packed.

The sixteen outputs can be connected or tagged in the same manner as any other function block output.

Inputs

ADDR = Device address from associated TCPS block. (Must be connected to a TCPS block)

Outputs

RD1 through RD16 – Last read value from selected address

Block properties

Double click on the function block to access the function block properties dialog box.

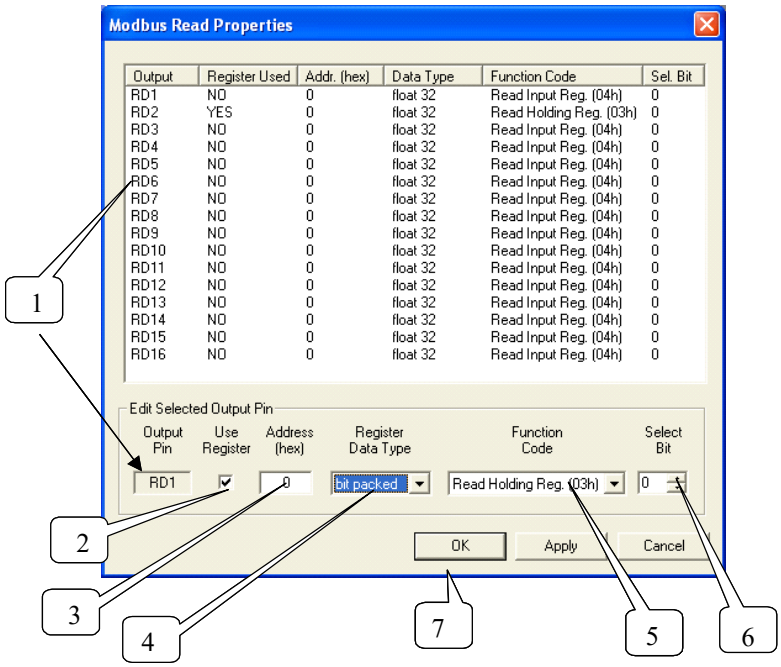

Configuration parameters

You must configure the TCPR function Block Output Pins as shown in the "Edit Selected Output Pin" portion of the dialog box. Follow the numbered sequence shown above referring to Table 119.

Table 119 TCPR function block configuration parameters

Sequence Number	Parameter Field	Action	Selections	Comments
1		Click on an Output Pin from the list of pins in the upper portion of the dialog box.	RD1 through RD16	The selected Output Pin will appear in the Output Pin Field.
2		Click on the "Use Register" field to assign a register to the Output pin.	RD1 through RD16	YES will be indicated in the "Register used" column when you select "Apply
3		Type in the address of the register (in Hex) on the device		

Sequence Number	Parameter Field	Action	Selections	Comments
4	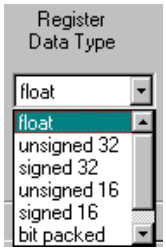	From the drop down menu, select the Register Data Type	• Float • Unsigned 32 • Signed 32 • Unsigned 16 • Signed 16 • Bit Packed • Single Bit	If read as an integer, the output is converted to a floating point.
5	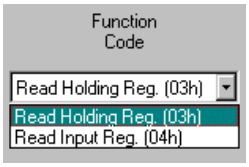 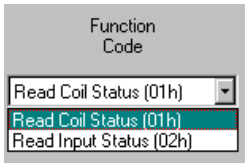	Select a function code for **"Float, Unsigned, Signed, or Bit Packed"** register data type Select a function code for **"Single Bit"** Register data type.	• Read Holding Reg – Function Code 03 • Read Input Registers – Function Code 04 • Read Coil Status – Function Code 01 • Read Input Status – Function Code 02	Function code 03 or Function code 04 is used to read the contents of input registers in the device. Function code 01 is used to read a device coil's (discrete output's) ON/OFF status of the device in a binary data format. Function code 02 is used to read a device input's (discrete input's) ON/OFF status of the device in a binary data format. Output is floating point equivalent (0.0 or 1.0). NOTE: Refer to the Communications manual for the function codes supported by the specific device.
6		Select which bit (0-15) to read when Register Data Type = Bit Packed	0 to 15	If read as a bit packed number, you must select which bit to mask (0-15). The output will be the floating-point equivalent (0.0 or 1.0) of the masked bit.
7	You must press [APPLY] to accept the register changes.			

Example

Figure 115 shows a Function Block Diagram using Modbus/TCP function blocks.

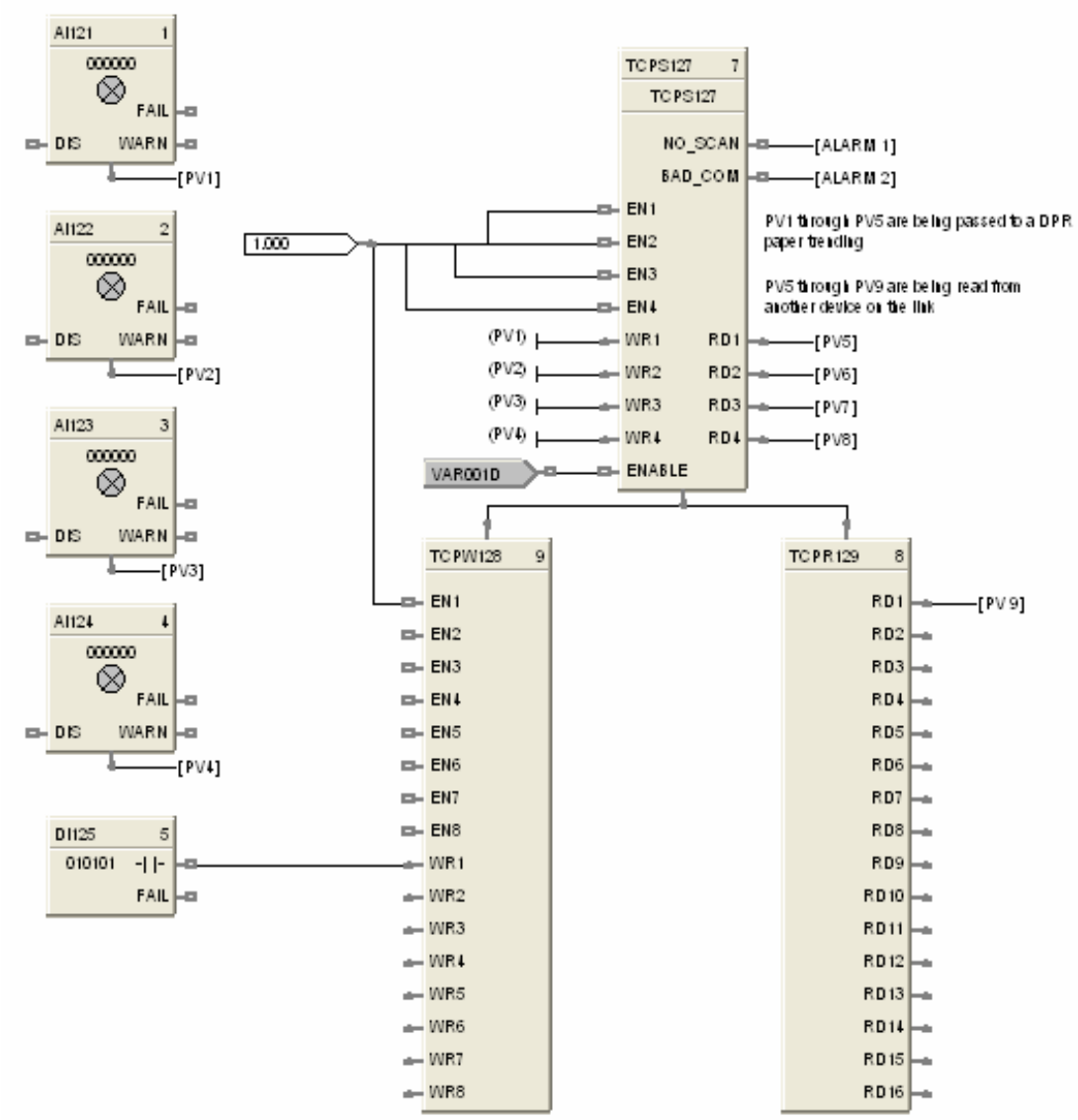

Figure 115 TCPR function block example

TCPS Function Block

Description

The **TCPS** label stands for **Modbus/TCP Device Status.** This block is part of the *Communications* category. It looks like this.

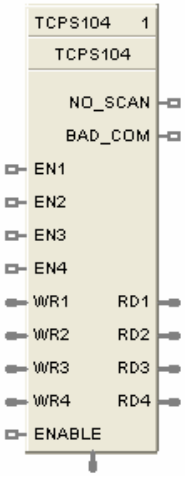

Function

A communication function block allows the controller to act as a modbus host device and communicate with modbus device via the Ethernet port of the controller. Requires one block per device, up to 32 devices maximum. Only one block may be assigned to each device. It supports 4 read and 4 write parameters plus provides digital indication of communication integrity.

Inputs

ENABLE = [ON] Device is in scan -
If the Enable pin **IS** connected, then enabling/disabling follows the state of the Enable pin of the block and the enable/disable function on the diagnostic page in the HC Designer is grayed out.

If the Enable pin is **NOT** connected, then the user must be in Monitor mode, Monitoring TCP Modbus Diagnostics in the HC Designer, select the device to be enabled or disabled, and click the Enable (or Disable) button.

EN1 through EN4 = [ON] Data value written once per scan

WR1 through WR4 = Values to be written to the selected register

ATTENTION

- This block does not support bit packing writing.
- If the register is an integer data type, the floating point input will be rounded up prior to writing to the address register.
- No_Scan Pin logic Hi if no repsonse < 750 mS.

Outputs

RD1 through RD4 = Last read value from the selected address

NO_SCAN = Scan Indication
ON = Device is “Out of Scan”
OFF = Device is “In Scan”.

BAD_COM = Communications Indication
ON = Bad quality or device not defined
OFF = Good Communications

IP_ADDR = IP Device Address for use with TCPR and TCPW function blocks

ATTENTION

- Integer values are converted to floating point values prior to output.
- If a Modbus host device does not respond to a request, the last output value will be maintained.

Block properties

Double click on the function block to access the function block properties dialog box.

Configuration parameters

The ON/OFF properties dialog box is divided into Three tab cards:

GENERAL
READ
WRITE

`Click on the tab to access the properties for that tab.`

GENERAL tab

It looks like this graphically.

Table 120 describes the parameters and the value or selection.

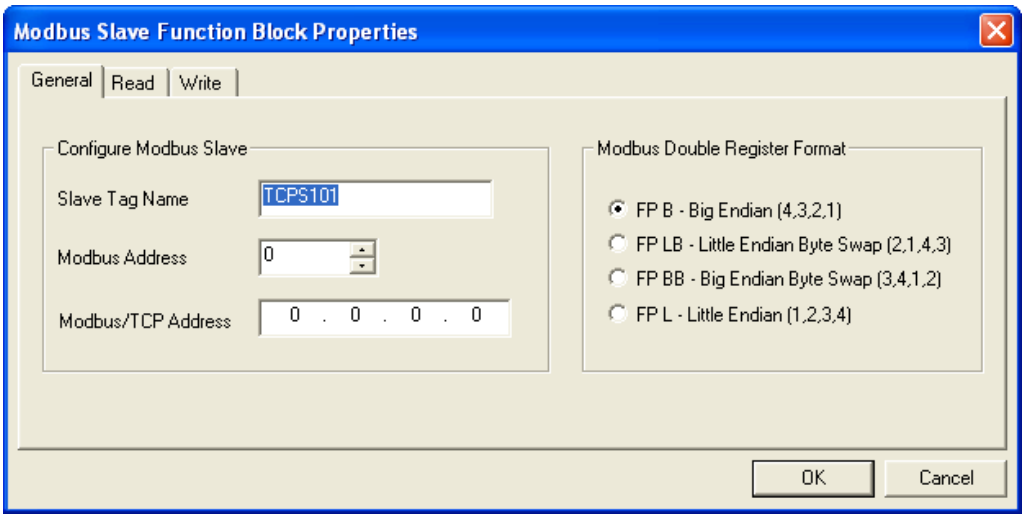

Table 120 TCPS Block General tab configuration parameters

Properties Function	Parameter	Index #	Parameter Description	Value or Selection
Configure Modbus Device	Device Tag Name	N/A	Description of Device	16-character tag name (ASCII characters only) Device address and Tag Name must be unique within a control file.
	Modbus Address	N/A	Unit address of device	Leave at 0 unless manufacturer of the device states otherwise.
	Modbus/TCP Address	N/A	IP Address of Device on the link	Enter unique address (Cannot be all 0.0.0.0 or 255.255.255.255) Default IP address = 0.0.0.0 which means device will **NOT** be in scan
Modbus Double Register Format	Each IEEE 32-bit floating point number requires two consecutive registers (four bytes) starting with the register defined as the starting register for the information. The stuffing order of the bytes into the two registers differs among Modbus hosts. The selections are: Selection — Description — Byte order FP B — Floating Point Big Endian Format — 4, 3, 2, 1 FP BB — Floating Point Big Endian with byte-swapped — 3, 4, 1, 2 FP L — Floating Point Little Endian Format — 1, 2, 3, 4 FP LB — Floating Point Little Endian with byte-swapped — 2, 1, 4, 3			

READ tab

It looks like this graphically. Table 121 describes the parameters and the value or selection.

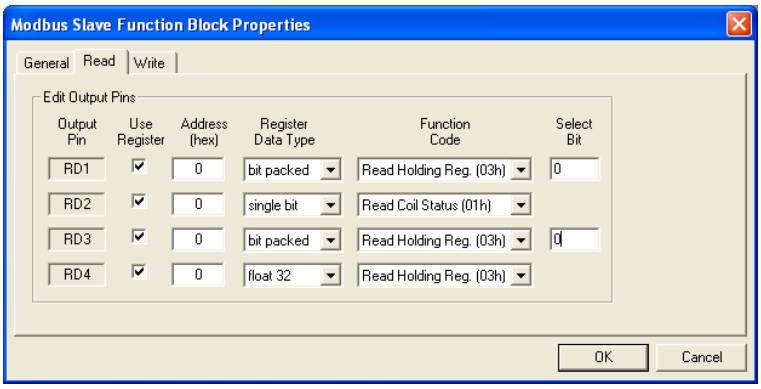

Table 121 TCPS Block Read tab configuration parameters

Properties Function	Parameter	Index #	Parameter Description	Value or Selection
Edit Output Pins	**Output Pin**	N/A	Output pin designation	Register request assigned to RD1, RD2, RD3, or RD4 pin
	Use Register	N/A	Register Request	Click on the “Use Register” field to assign a register to the Output pin.
	Address (hex)	N/A	Register Address	Type in the address of the Read register (in Hex) on the device. **NOTE: A single configuration may contain up to 256 enabled registers.**
	Register Data Type	N/A	Register data type	From the drop down menu, select the Register Data Type • Float • Unsigned 32 • Signed 32 • Unsigned 16 • Signed 16 • Bit Packed • Single Bit If read as an integer, output is converted to floating point equivalent.

Properties Function	Parameter	Index #	Parameter Description	Value or Selection
	Function Code	N/A	Several standard Modbus RTU function codes are supported. These standard function codes provide basic support for IEEE 32-bit floating point numbers and 16-bit integer register representation of instrument's process data	Function code **03 – Read Holding Registers** or Function code **04 – Read Input Registers** is used to read the contents of input registers in the device. **Supported Data Types for Function Codes 03 and 04.** From the drop down menu, select a function code for **"Float, Unsigned, Signed, or Bit Packed"** register data type Function code **01 – Read Coil Status** is used to read the coil's (discrete output's) ON/OFF status of the device in a binary data format. Function code **02 – Read Input Status** is used to read the input's (discrete input's) ON/OFF status of the device in a binary data format. **Supported Data Types for Function Codes 01 and 02.** Select a function code for **"Single Bit"** Register data type. NOTE: Refer to the Communications manual for the function codes supported by the specific device.
	Select Bit	N/A	Bit to read when Read register's data type = Bit Packed You must then select which bit to mask (0-15). The output will be the floating-point equivalent (0.0 or 1.0) of the masked bit.	0-15

Write tab

It looks like this graphically

Error! Not a valid bookmark self-reference. describes the parameters and the value or selection.

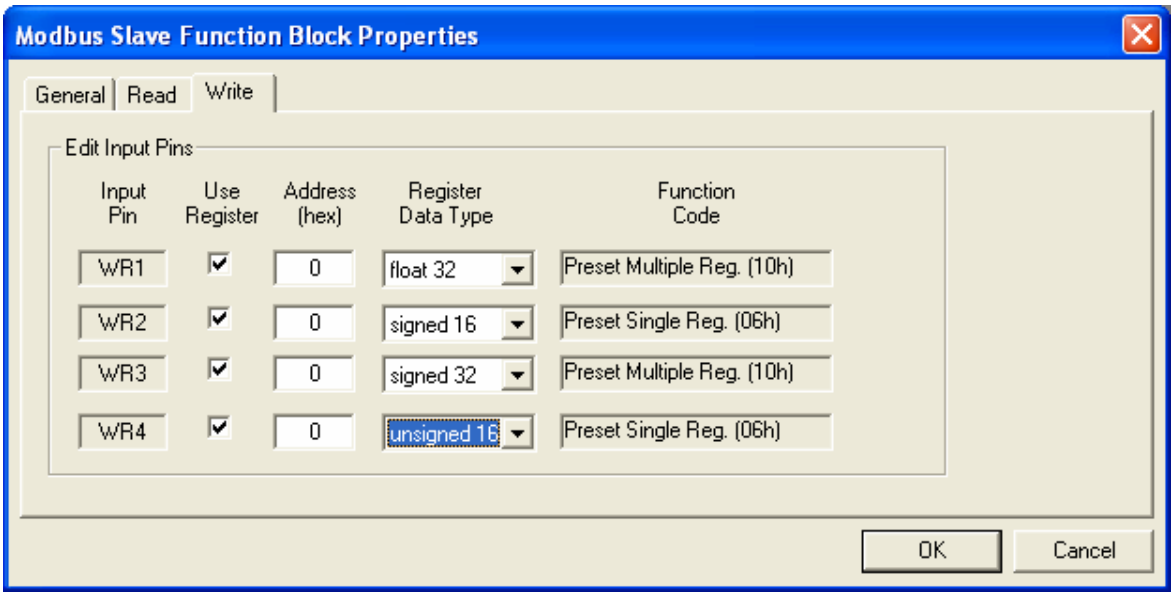

Table 122 TCPS Block Write tab configuration parameters

Properties Function	Parameter	Index #	Parameter Description	Value or Selection
Edit Input Pins	**Input Pin**	N/A	Input pin designation	Register request assigned to WR1,WR2,WR3, or WR4 pin
	Use Register	N/A	Register Request	Click on the “Use Register” field to assign a register to the Input pin.
	Address (hex)	N/A	Register Address	Type in the address of the Write register (in Hex) on the device.
	Register Data Type	N/A	Register data type	From the drop down menu, select the Register Data Type • Float • Unsigned 32 • Signed 32 • Unsigned 16 • Signed 16 • Single bit
	Function Code	N/A	Several standard Modbus RTU function codes are supported. These standard function codes provide basic support for IEEE 32-bit floating point numbers and 16-bit integer register representation of instrument’s process data Preset Single Registers – Function Code 06 Preset Multiple Registers – Function Code 10 hex Preset single bit – Function Code 05	The function code for **“Unsigned 16 or Signed 16,”** register data type is **06 – Preset Single Registers*** presets integer value into a single register.. The function code for **“Float, Unsigned 32 or Signed 32,”** register data type is **10 hex – Preset Multiple Registers*** presets values into holding registers. **automatically selected when you select “Register Data Type”* NOTE: Refer to the Communications manual for the function codes supported by the specific device.

Example

Figure 116 shows a Function Block Diagram using Modbus/TCP function blocks.

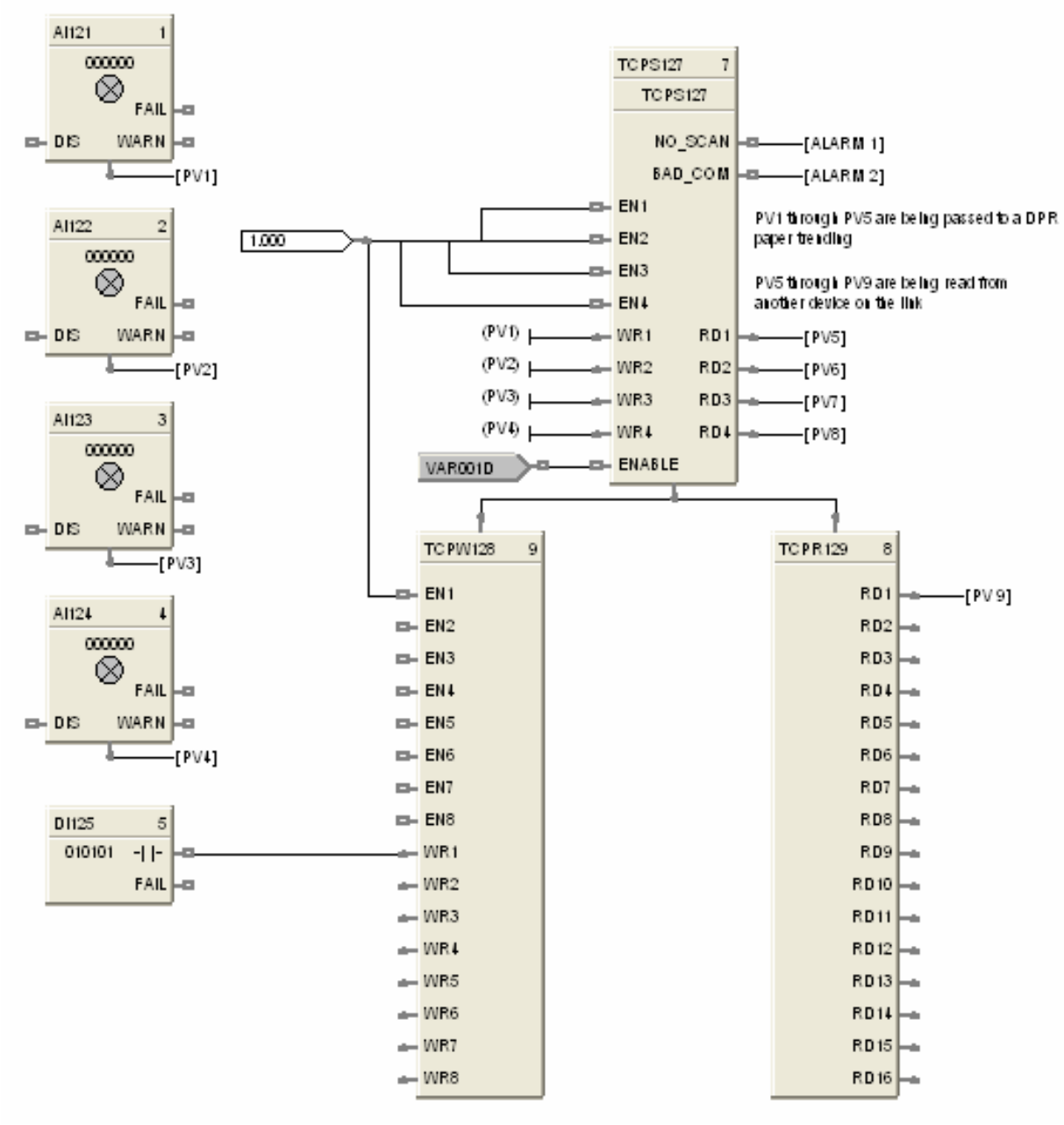

Figure 116 TCPS function block example

TCPW Function Block

Description

The **TCPW** label stands for **Modbus/TCP Write.** This block is part of the *Communications* category. It looks like this graphically.

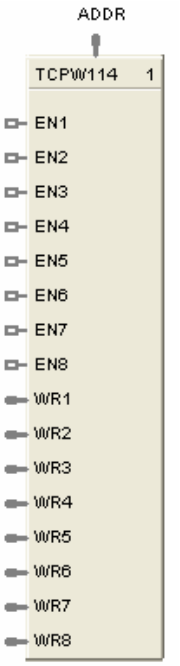

Function

This is a communication function block that expands the write capability of the Modbus/TCP Device function block to 8 additional data points. Multiple blocks may be connected to the same Modbus Device block.

The Modbus write block has 8 inputs and no outputs. The Modbus destination for each of the eight inputs can be configured. An enable pin lets the data value be written once per scan.

The configuration data for each point will consist of: the address of the destination device on the Modbus link, the register address of the desired data, and the register type: Integer or Float.

Inputs

EN1 through EN8 = [ON] Data value is written once per scan

WR1 through WR8 = Value to be written to the selected register address.

ADDR = Device address from associated TCPS block. *(Must be connected to TCPS block)*

Outputs

None

Block properties

Double click on the function block to access the function block properties dialog box.

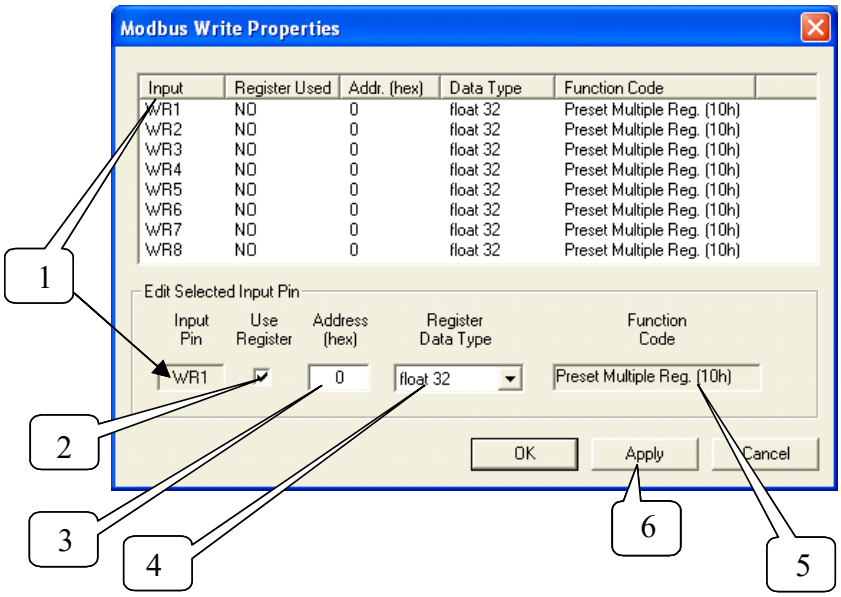

Configuration parameters

You must configure the TCPW function Block Input Pins as shown in the "Edit Selected Input Pin" portion of the dialog box. Follow the numbered sequence shown above referring to Table 123.

Table 123 TCPW function block configuration parameters

Sequence Number	Parameter Field	Action	Selections	Comments
1	Input Pin WR1	Click on an Input Pin from the list of pins in the upper portion of the dialog box. The selected Input Pin will appear in the "Input Pin" Field.	WR1 through WR8	
2	Use Register ☑	Click on the "Use Register" field to assign a register to the Input pin. YES will be indicated in the "Register Used" column when you select "Apply" .	WR1 through WR8	
3	Address (hex) 0	Type in the address of the register (in Hex) on the device.		

Sequence Number	Parameter Field	Action	Selections	Comments
4	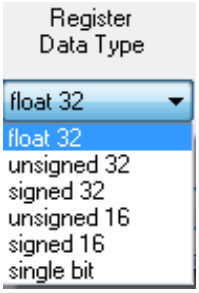	From the drop down menu, select the Register Data Type	• Float • Unsigned 32 • Signed 32 • Unsigned 16 • Signed 16 • Single bit	Several standard Modbus RTU function codes are supported. These standard function codes provide basic support for IEEE 32-bit floating point numbers and 16-bit integer register representation of instrument's process data. (see Sequence Number 5 below)
5	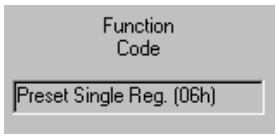 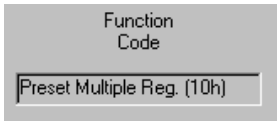 	The function code for **"Unsigned 16 or Signed 16** register data type is (06)* The function code for **"Float, Unsigned 32 or Signed 32** register data type is (10 hex)* **automatically selected when you select "Register Data Type"*	• Preset Single Registers – Function Code 06 • Preset Multiple Registers – Function Code 10 hex • Preset single bit – Function Code 05	Function code 06 presets integer value into a single register. Function Code 10 hex presets values into holding registers. NOTE: Refer to the Communications manual for the function codes supported by the specific device.
6	You must press [APPLY] to accept the register changes.			

Example

Figure 117 shows a Function Block Diagram using Modbus/TCP function blocks.

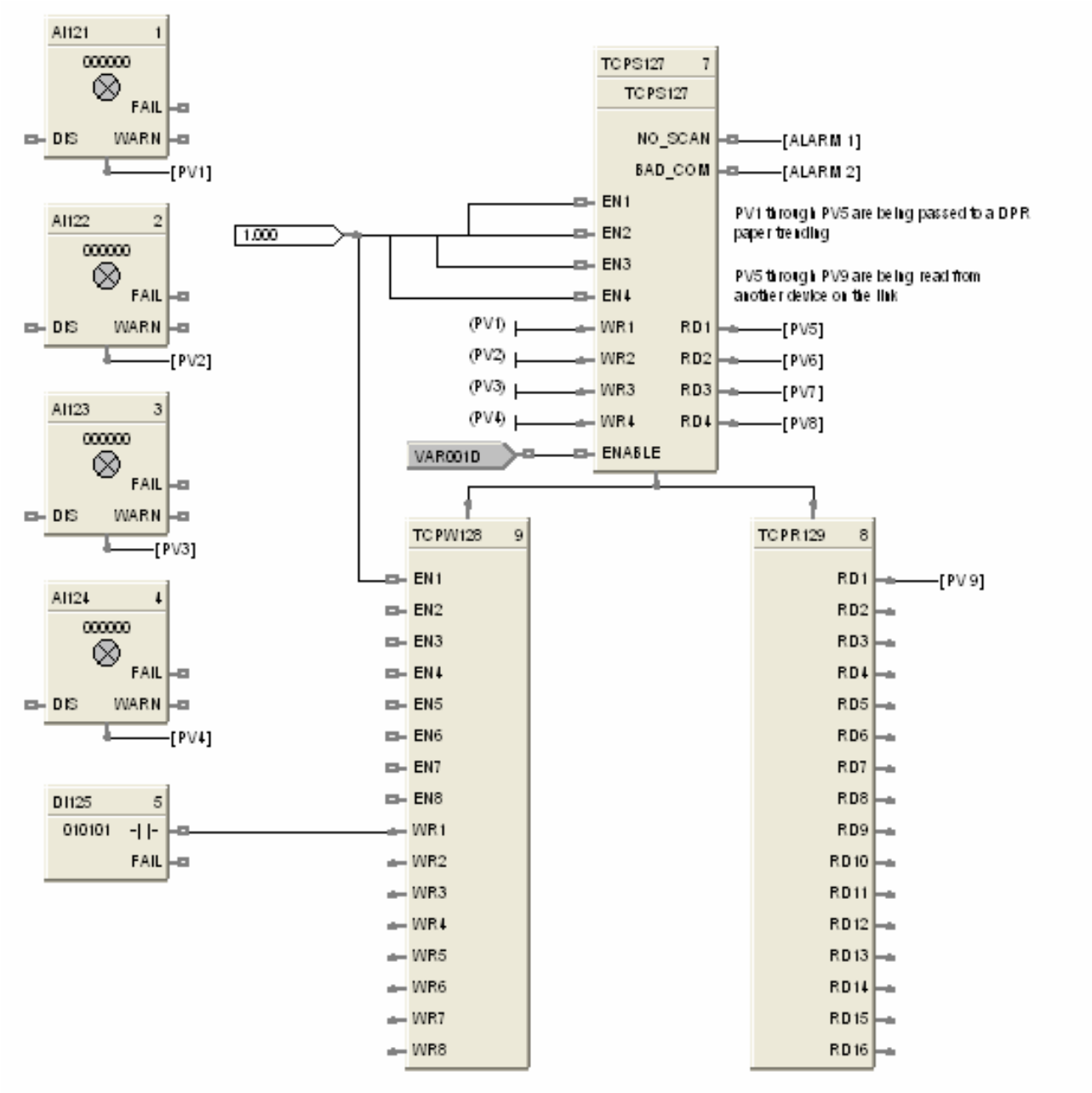

Figure 117 TCPW function block example

TGFF Toggle Flip Flop Function Block

Description

The TGFF label stands for Toggle Flip-Flop.

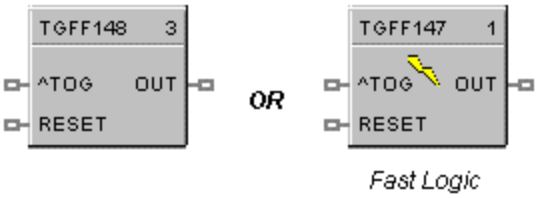

This block is part of the *Logic* and *Fast Logic* categories.

Function

Provides an ON state output when a digital input goes from OFF to ON and the previous state of the output was OFF, and an OFF state output when the digital input goes from OFF to ON and the previous state of the output was ON.

- OUT = ON when ^TOG changes from OFF to ON and the previous state of OUT was *OFF*.
- OUT = OFF when ^TOG changes from OFF to ON and the previous state of OUT was *ON*.
- Reset sets output to OFF, regardless of current state.

Input

^TOG = Digital Input
RESET = Digital input ON Input = OFF output

Output

OUT = Digital Output

Block properties

Double click on the function block to access the function block properties dialog box.

Example

Figure 118 shows a Function Block Diagram using a TGFF function block and how to tag the output.

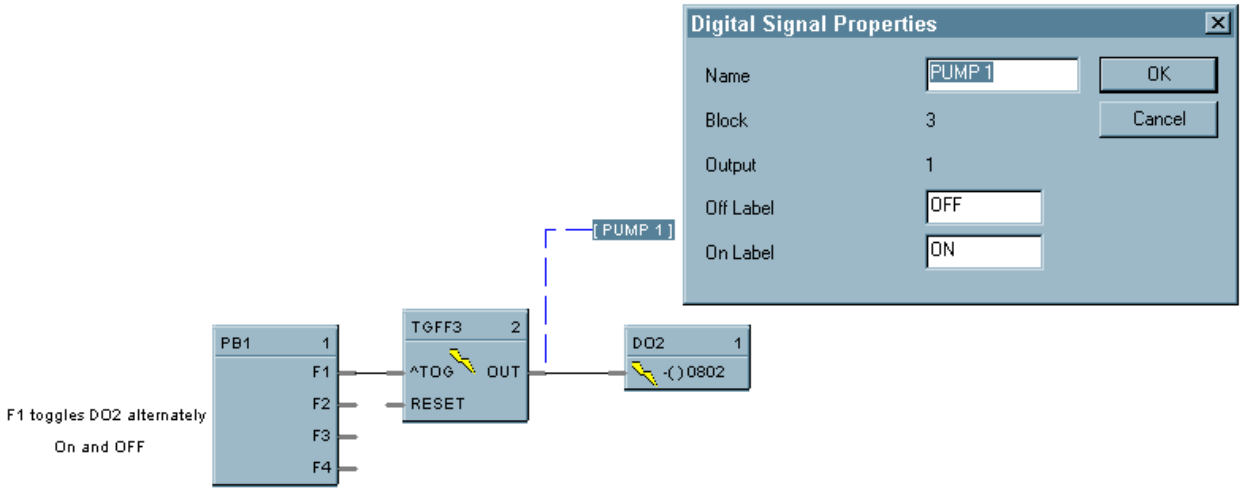

Figure 118 TGFF function block example

TMDT Time and Date Function Block

Description

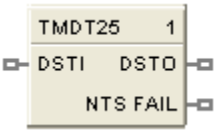

The **TMDT** label stands for **Time and Dat**e. This block is part of the *Counters/Timers* category.

Function

Controls change between Daylight Saving and Standard time. Indicates when controller time is in Daylight Saving. If the controller is using a network time server, indicates if the connection to server has failed.

Inputs

DSTI – When ON the controller will be in Daylight Saving time. When OFF the controller will be in Standard time. Use of this pin requires configuring the controller time to use DSTI.

Outputs

DSTO – ON when controller is in Daylight Saving time. OFF when controller is in Standard time. To set up Daylight Saving time, see Set Controller Time in HC Designer configuration software.

NTFAIL – ON when connection to network time server has failed. Note: controller's time is synchronized to the time server every few hours, therefore this pin can take a few hours to detect the failure.

Block Properties

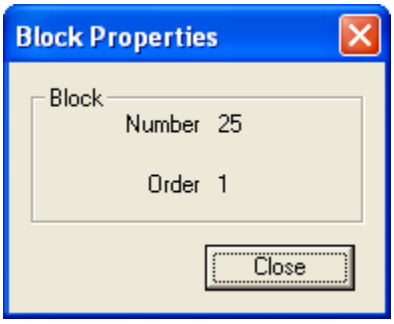

Configurable Parameters

Table 124 Time and Date configuration parameters

Properties Group	Parameter	Index #	Parameter Description	Value or Selection
Block	**Order**	N/A	Execution Order for Block	Read Only. To change block order, right-click on a Function Block and select Execution Order.

TOT Totalizer Function Block

Description

The **TOT** label stands for **Totalizer.**

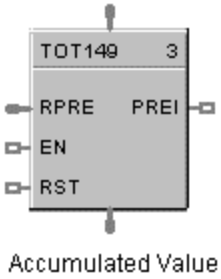

This block is part of the *Calculations* category.

Function

Integrates an Analog variable using a specified rate. Rate may be in units per second, minute, hour, or day.

A preset is provided to reset the value when a specific quantity has been accumulated and provide a digital status output.

Separate digital enable and reset inputs are provided.

Accumulated value may increment from 0 to preset for increasing totals or decrement from the preset to 0 for decreasing totals.

Inputs

RPRE = Remote Preset Value in Engineering Units

EN = When the enable input is ON, the input value is integrated to a preset value. (Value HOLD when EN = OFF.)

RST = ON resets the output to zero. (Accumulated value set to 0.)

Output

PREI = Digital output, ON when the output = Preset Value. Upon reaching the preset value the digital output is enabled for one scan and the totalizer restarts from 0.

OUT = Accumulated value in engineering units.

Block properties

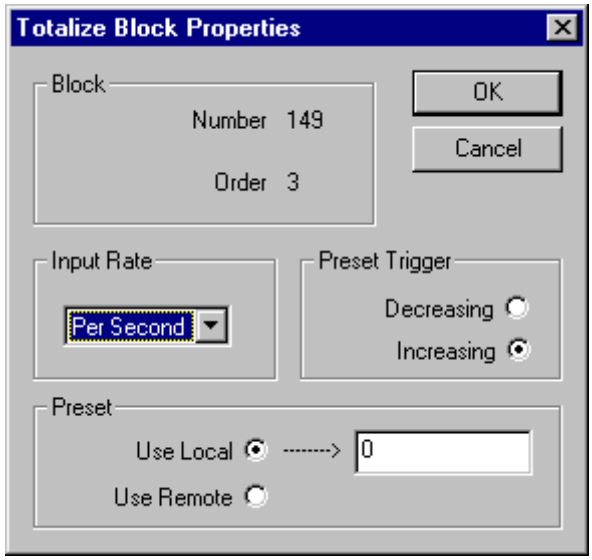

Double click on the function block to access the function block properties dialog box.

Configuration parameters

Table 125 TOT configuration parameters

Properties Group	Parameter	Index #	Parameter Description	Value or Selection
Block	**Order**	N/A	Execution Order	Read Only. To change block order, right-click on a Function Block and select Execution Order.
Input Rate	**Input Rate**	N/A	Input rate	Select: Per Second Per Minute Per Hour Per Day
Use Preset	**Use Local**	N/A	Local Preset	Click on Radio Button to select and enter value in Local Preset field
		1	Local Preset Value	1 to 999999
	Use Remote	N/A	Remote Preset	Click on Radio Button to select
Preset Trigger	**Decreasing**	N/A	Select this to decrement from preset down to zero	Click on Radio Button to select
	Increasing	N/A	Select this to accumulate from 0 to preset value	Click on Radio Button to select

Example

Figure 119 shows Function Block Diagrams using a TOT function block.

EXAMPLE 1

HC900 ON Delay timers are not retentive - if the RUN input is logic 0, the timer is reset. A retentive timer has an Enable and a Reset input. As long as the timer is not reset, time will be accumulated when the Enable Input is logic 1 (ON). This permits recording the time a device such as a pump has been on.

This example uses a Totalizer function block as a retentive timer. If a fixed input of 1 is provided to the block using a Numeric Constant, the totalizer will time up to 1 at the input rate selected (per sec, per min., per hr, or per day). For example, if the "per hr" rate were selected, the output would be 1.0 after 1 hour, 2.0 after 2 hours, etc, up to the Preset value.

A counter is shown to count the number of pump cycles (On to OFF transitions).

The P4-RESET Digital Variable is used to reset the timer and counter

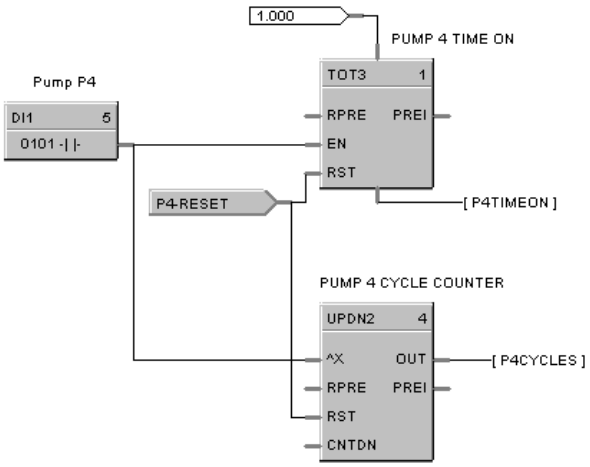

EXAMPLE 2 - FLOW TOTALIZATION

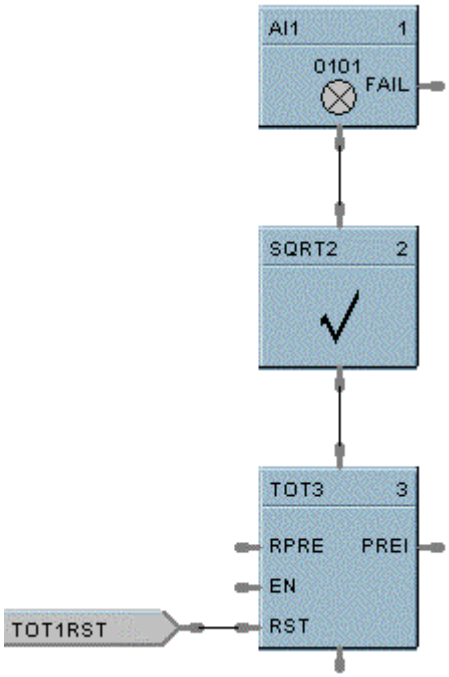

Figure 119 TOT function block examples

TPO Time Proportional Output Function Block

Description

The TPO label stands for Time Proportional Output.

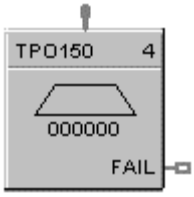

This block is part of the *I/O Blocks* category.

ATTENTION

- Operation is performed within Module.
- Output Resolution is 4 mS.
- To identify Energized Output, must hard-wire back to (Fast) Digital Input.

Function

Proportions the amount of ON time and OFF time of a Digital Output over a user defined cycle time.

- On Time = [cycle time * (IN - range lo)] / (range hi - range lo)
- OFF Time = cycle time - On Time
- If On Time < minimum ON time, then On Time = 0.0
- If OFF Time < minimum OFF time, then OFF Time = 0.0.

Input

Analog Input value in Percent (%)

Block properties

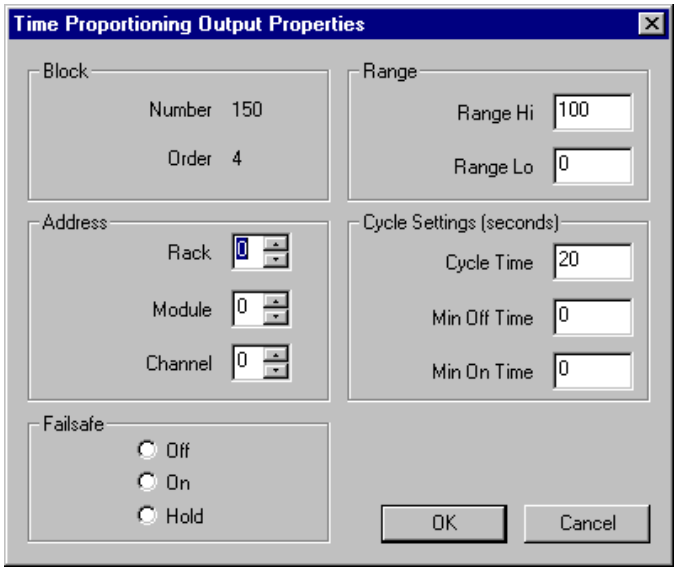

Double click on the function block to access the function block properties dialog box.

Configuration parameters

Table 126 TPO configuration parameters

Properties Group	Parameter	Index #	Parameter Description	Value or Selection
Address	**Rack**	0	Address of selected Rack	Enter a value: from 1 to 5
	I/O Module		Address of selected I/O module	Enter a value: from 1 to 16
	Channel		Channel on selected I/O Module	Enter a value: from 1 to 16*
Range	**Range Hi**	1	High Range Value	–9999 to 9999 Default = 100
	Range Lo	2	Low Range Value	–9999 to 9999 Default = 0
Cycle Settings	**Cycle Time**	N/A	Output Cycle Time	1 to 120 seconds Default = 20
	Min Off Time	4	Minimum OFF time	to 15.0 seconds Default = 0.0
	Min On Time	5	Minimum ON time	to 15.0 seconds Default = 0.0
	*For ControlEdge HC900 controller's 32 Channel DO Module, outputs 17 through 32 may not be used for TPO (Time Proportioning Output), PPO (Position Proportioning Output) or TPSC (Three Position Step Output) output types.			

Example

Figure 120 shows a Function Block Diagram using a TPO function block. Time Proportioning outputs are commonly used for electrically heated applications where regulating the amount of ON time vs. OFF time of a heater is used to control temperature. In the example the TPO output is used to activate a relay output to control a heater.

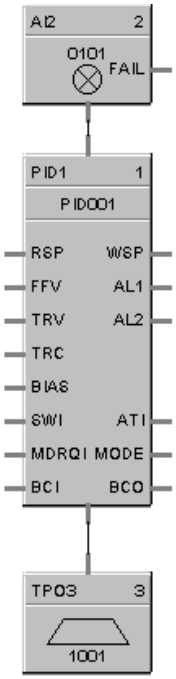

Figure 120 TPO function block example

TPSC (3POS) Function Block

Description

The TPSC (3POS) label stands for Three Position Step Control operation.

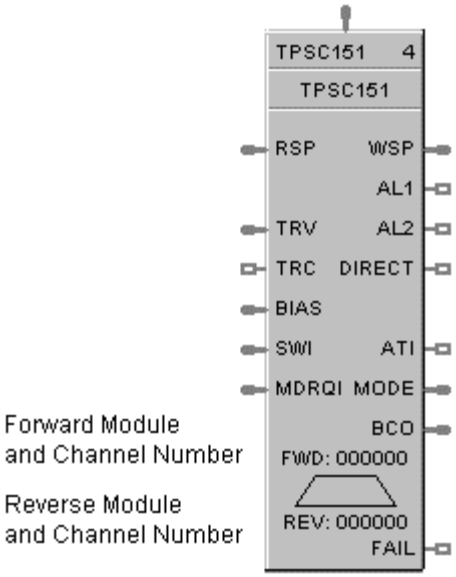

This block is part of the *Loops* category.

Function

This block combines a PID controller with 3 position step control output functions to provide motor position control without position sensing. Allows the control of a valve or other actuator having an electric motor driven by two digital output channels; one to move the motor upscale, the other to move it downscale, without a feedback slidewire linked to the motor shaft.

WARNING

During Hot-Start, TPSC Outputs turn Off. After Hot-Start complete, TPSC Output resumes to original position.

Inputs

PV = Process Variable Analog Input value in Engineering Units
RSP = Remote Setpoint Analog Input value in Engineering Units or Percent
TRV = Output Track value in Percentage (PID Output = TRV Input when TRC = ON.)
TRC = Output Track Command [ON, OFF] (On -Enables TRV) (Mode = Local Override)
BIAS = Remote Bias value for Ratio PID
SWI = Switch Inputs (from SWO on LPSW function block)

0 = No Change
1 = Initiate Autotuning
2 = Change Control Action
4 = Force Bumpless Transfer
8 = Switch to Tune Set 1
16 = Switch to Tune Set 2

MDRQI = External Mode request (typically connected to the MDRQO output of a MDSW function block.

0 = No Change
1 = Manual Mode Request
2 = Auto Mode Request
4 = Local Mode Request
8 = Remote Mode Request

Outputs

WSP = Working Setpoint in Engineering Units for monitoring
AL1 = Alarm 1 - Digital Signal
AL2 = Alarm 2 - Digital Signal
DIRECT = ON = Direct; OFF = Reverse
ATI = Autotune Indicator (ON = Autotune in Progress)
MODE = Loop mode status (typically connected to the Mode Flags block for encoding). Value indicates modes as follows:

0.0	RSP AUTO
1.0	RSP MAN
2.0	RSP Initialization Manual (See ATTENTION)
3.0	RSP Local Override (See ATTENTION)
4.0	LSP AUTO
5.0	LSP MAN
6.0	LSP Initialization Manual (See ATTENTION)
7.0	LSP Local Override (See ATTENTION)

BCO - Back Calculation Output (for blocks used as Cascade Secondary). This block can *only* be used as a cascade secondary; therefore, no BCI input is provided.
FAIL = Failed Output Indicator - Module Error

ATTENTION

When a request to change from Auto to manual is received and:

- the request comes from the operator Interface, *the request is ignored*.
- the request comes from the Mode Switch (MDSW) function block, the request is retained and when leaving the Initialization Mode or Local Override Mode the loop will go to manual.

Block properties

Double click on the function block to access the function block properties dialog box.

Dialog box structure

The TPCS properties dialog box is divided into 8 tab cards

GENERAL
START/RESTART
RSP
RANGE/LIMIT
TUNING
ACCUTUNE
ALARMS
MOTOR

Click on the tab to access the properties for that tab.

GENERAL tab

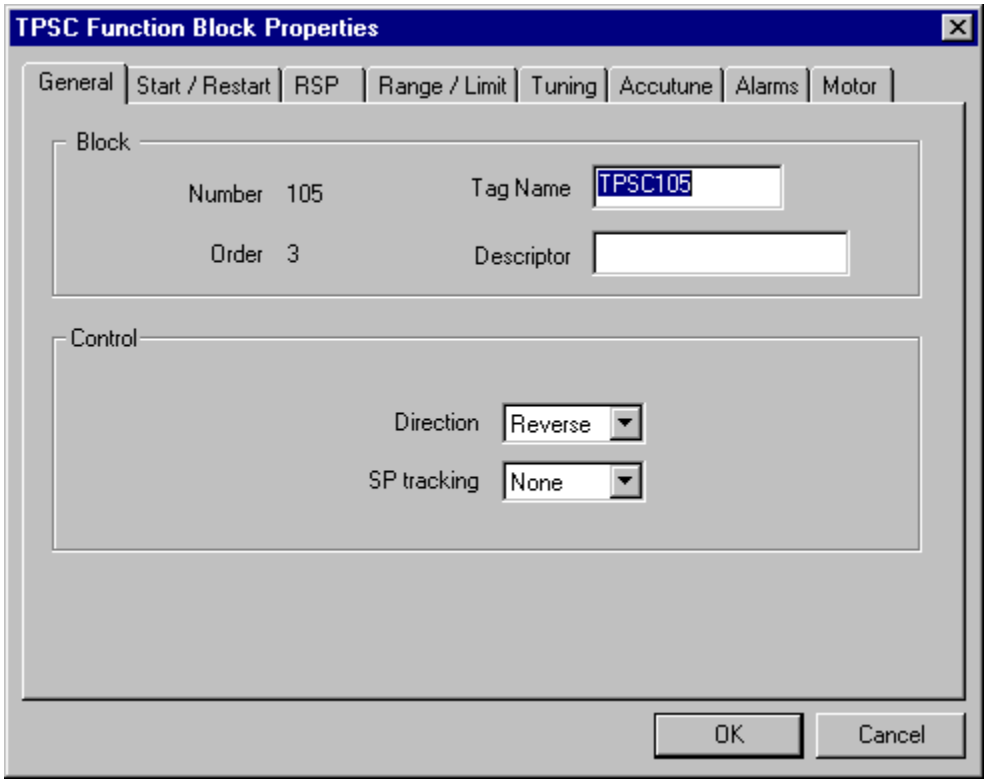

Table 127 TPSC General tab configuration parameters

Properties Group	Parameter	Index #	Parameter Description	Value or Selection
Block	**Order**	N/A	Execution Order	Read Only. To change block order, right-click on a Function Block and select Execution Order.
	Tag Name	N/A	32-characters unique tag name (ASCII characters only)	Up to 32-characters
	Descriptor	N/A	Block description	Up to 32-characters
Control	**Direction**	N/A	Control Action	**DIRECT** - Proportional action causes output to **increase** as process variable increases. **REVERSE** - Proportional action causes output to **decrease** as process variable increases.
	SP Tracking	N/A	Setpoint Tracking	**None** **Track PV** - When control mode is “manual”, local setpoint tracks process variable. **Track RSP** - When setpoint is “remote setpoint”, local setpoint tracks remote setpoint.

START/RESTART tab

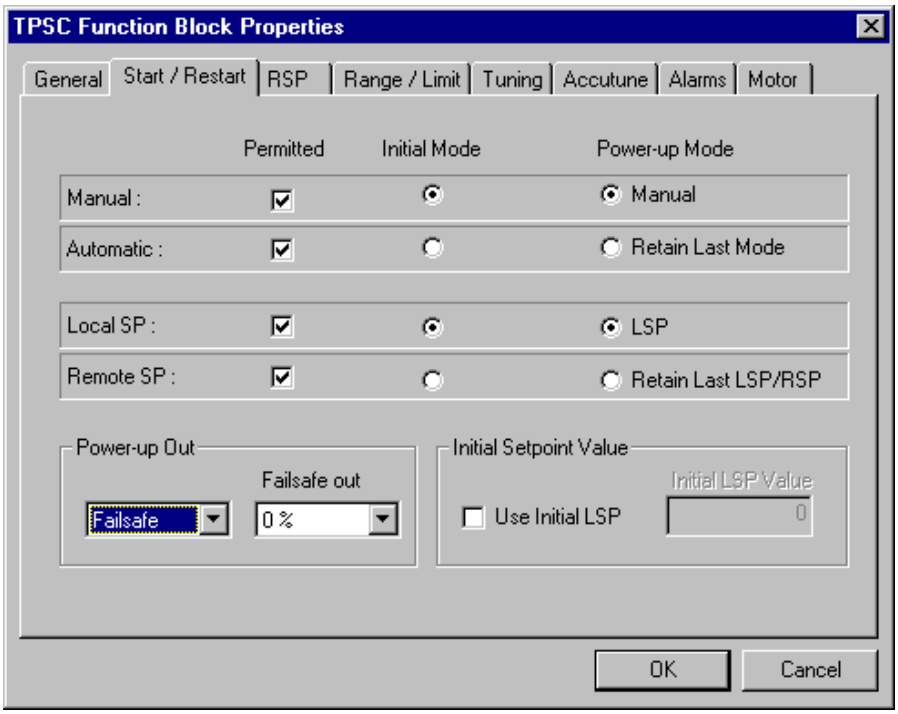

Table 128 TPSC Start/Restart tab configuration parameter

Modes and Setpoints	**Permitted Mode**	MAN 7 AUTO 8	Mode permitted for the initial start and power up mode.	**Manual** **Automatic** ***May select both, must select one.***
	Permitted Setpoint	LSP 9 RSP 10	Setpoint permitted for the initial start and power up mode.	**Local Setpoint** **Remote Setpoint** ***May select both, must select one.***
	Initial Mode	N/A	Mode at NEWSTART **Newstart** is the first scan cycle following the cold start of the controller	**Manual** **Automatic** *Select one*
	Setpoint for Initial Mode	N/A	Setpoint at NEWSTART **Newstart** is the first scan cycle following the cold start of the controller	**Local Setpoint** **Remote Setpoint** *Select one*
	Power up Mode	N/A	Mode at power up	**Manual** **Retain Last Mode** Same mode (auto or manual) *Select one*
	Power up Setpoint	N/A	Setpoint at power up	**Local Setpoint** **Retain Last LSP/RSP** Same Setpoint (LSP or RSP) ***Select one***
Power Up Out	**Power Up Out**	N/A	Output at Power up	**LAST OUT** - Same as at power down. **FAILSAFE** - Failsafe output value.
	Failsafe Out	N/A	Failsafe Output Value	–5 % to 105 %
Initial Setpoint Value	**Use initial LSP**	15	Use Initial Local Setpoint	Click on radio button to select
	Initial LSP Value	16	Initial Local Setpoint Value	Enter Initial Local Setpoint Value

RSP tab

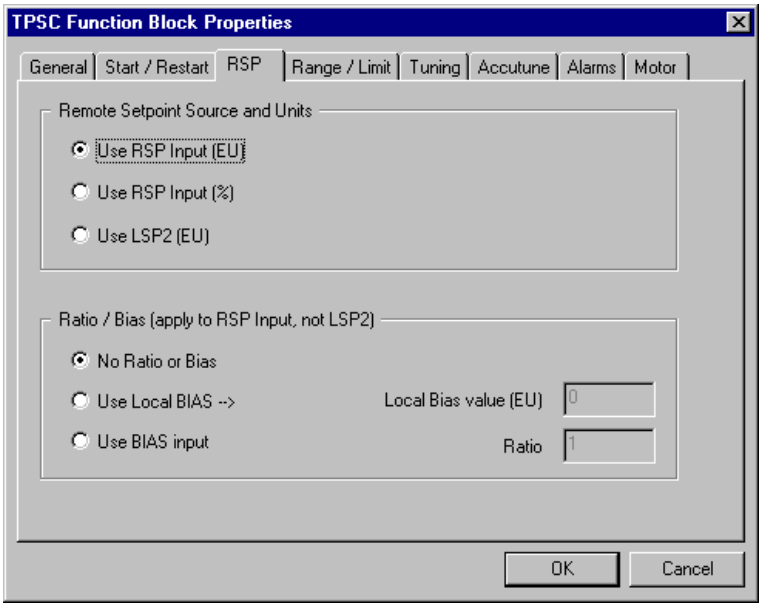

Table 129 TPSC RSP tab configuration parameters

Properties Group	Parameter	Index #	Parameter Description	Value or Selection
Remote Setpoint Source and Units	**Use RSP Input (EU)**	N/A	Use Remote Setpoint in Engineering Units	Click on radio button to select
	Use RSP Input (%)	N/A	Use Remote Setpoint in Percent	Click on radio button to select
	Use LSP2 (EU)	N/A	Use Local Setpoint #2 in Engineering Units	Click on radio button to select
Ratio/Bias **(RSP Input Only)**	**No Ratio or Bias**	N/A	No ratio and bias applied to the function block	Click on radio button to select
	Use Local Bias	N/A	Use Bias value selected on Tab	Click on radio button to select Enter value at "**Local Bias Value**" on tab.
	Use Bias Input	N/A	Use Bias value attached to an input to the block	Click on radio button to select
	Local Bias Value (EU)	46	Local bias value in engineering units	Enter local bias value –99999 to 99999
	Ratio	45	Gain value for Ratio PID	–20 to +20

RANGE/LIMIT tab

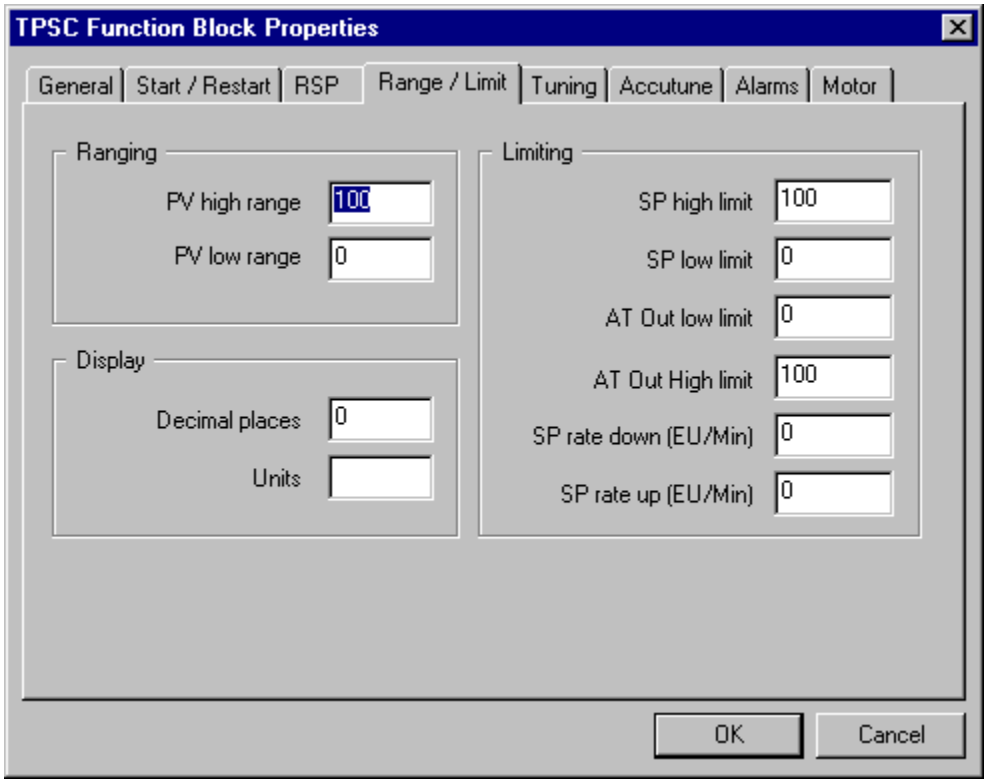

Table 130 TPSC Range/limit tab configuration parameters

Properties Group	Parameter	Index #	Parameter Description	Value or Selection
Ranging	**PV High Range**	3	PV High Range Value	–99999 to 99999
	PV Low Range	4	PV Low Range Value	–99999 to 99999
Display	**Decimal Places**	N/A	Number of digits after decimal point for display	0-5
	Units	N/A	Engineering units for display	up to 6 characters
	DEV Bar Range (EU)	N/A	Deviation Bar Range on the Operator Interface	–99999 to 99999
Limiting	**SP High Limit**	18	Setpoint High Limit Value - prevents the local and remote setpoints from going above the value set here.	–99999 to 99999
	SP Low Limit	19	Setpoint Low Limit Value - prevents the local and remote setpoints from going below the value set here.	–99999 to 99999
	Out High Limit	33	Autotuning Output High Limit Value - is the highest value of the output beyond which the motor no longer affects the process.	0 % to 100 %
	Out Low Limit	34	Autotuning Output Low Limit Value - is the lowest value of the output beyond which the motor no longer affects the process.	0 % to 100 %
	SP Rate Down	42	Setpoint Rate Down value - when making a setpoint change, this is the rate at which setpoint will change from the original setpoint **down** to the new one.	0 (off) to 9999 (eu/min)
	SP Rate Up	43	Setpoint Rate Up value - when making a setpoint change, this is the rate at which setpoint will change from the original setpoint **up** to the new one.	0 (off) to 9999 (eu/min)

TUNING tab

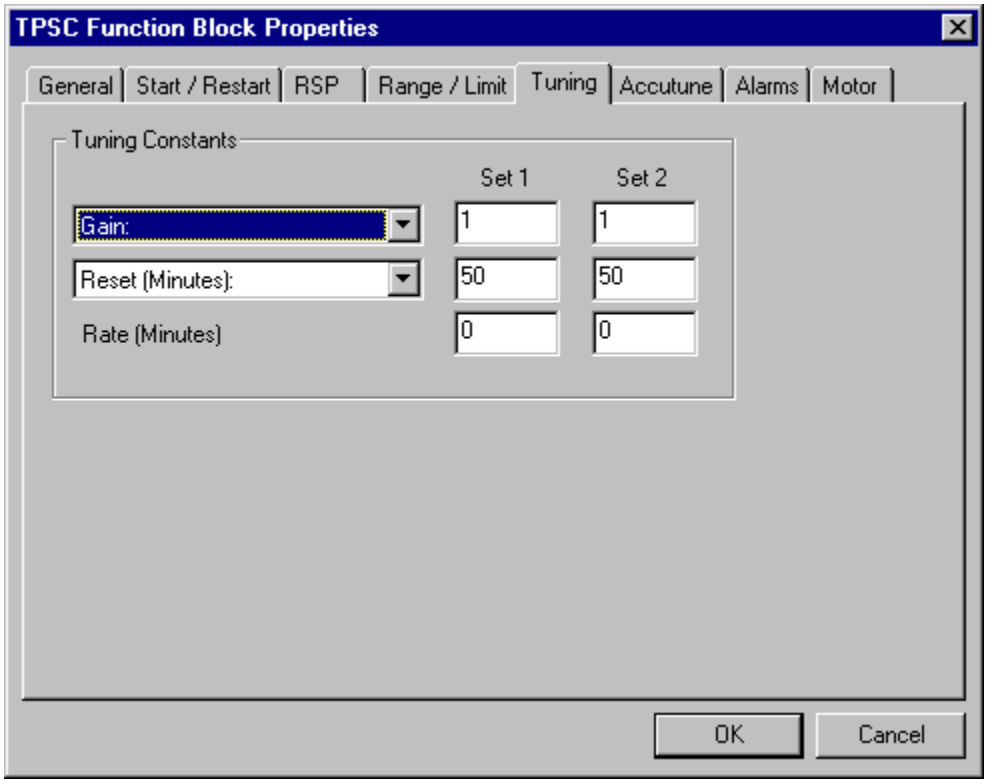
TPSC Function Block Properties
General
Start / Restart
RSP
Range / Limit
Tuning
Accutune
Alarms
Motor
Tuning Constants
Set 1
Set 2
Gain:
1
1
Reset (Minutes):
50
50
Rate (Minutes)
0
0
OK
Cancel

Table 131 TPSC Tuning tab configuration parameters

Properties Group	Parameter	Index #	Parameter Description	Value or Selection
Tuning Constants	**Prop Band** **or** **Gain**	0 PB1 or Gain1 37 PB2 or Gain2	**Proportional Band (PB)** - is the percentage of the range of the measured variable for which a proportional controller will produce a 100 % change in its output. **Gain** - is the ratio of output change (%) over the measured variable change (%) that caused it. $G = \frac{100\ \%}{PB\ \%}$ where PB is the Proportional Band (in %)	0.1 to 1000 0.1 % to 1000 % **ATTENTION: Enter values for tuning set 1 and tuning set 2 in specified fields.**
	Reset Minutes or Repeats per Minute	2 Reset1 or 39 Reset2	**RESET** (Integral Time) - adjusts the controller's output according to both the size of the deviation (SP-PV) and the time it lasts. The amount of corrective action depends on the value of Gain. The reset adjustment is measured as how many times proportional action is repeated per minute (**Repeats/minute**) or how many minutes before one repeat of the proportional action occurs (**Minutes/repeat**).	0.02 to 50.00
	Rate Minutes	1 Rate1 or 38 Rate2	**RATE** action, in minutes affects the controller's output whenever the deviation is changing; and affects it more when the deviation is changing faster.	0 or 0.1 to 10.00 minutes 0 = OFF

ACCUTUNE tab

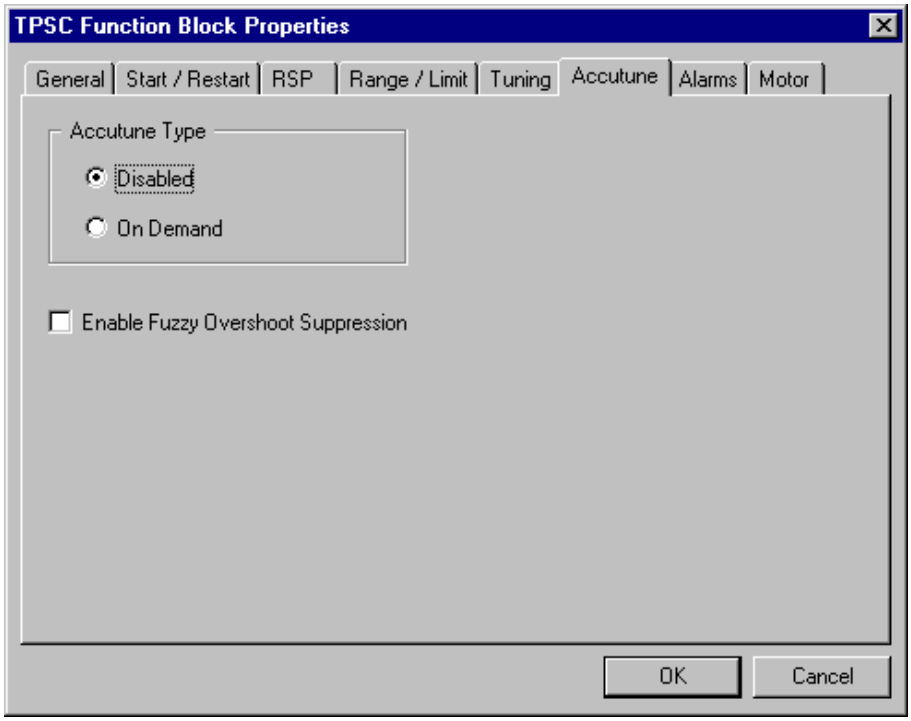

Table 132 TPSC Accutune tab configuration parameters

Properties Group	Parameter	Index #	Parameter Description	Value or Selection
Accutune Type	**Disabled**	N/A	Disables Accutune	Click on radio button to select
	On Demand	N/A	When initiated, the controller will start controlling to the setpoint while it identifies the process, calculates the tuning constants, and begins TPSC control with the correct tuning parameters.	Click on radio button to select
Enable Fuzzy Overshoot Suppression **Click on block to select**		35	Fuzzy Overshoot Suppression minimizes overshoot after a setpoint change or a process disturbance. The fuzzy logic observes the speed and direction of the PV signal as it approaches the setpoint and temporarily modifies the internal controller response action as necessary to avoid an overshoot. There is no change to the TPSC algorithm, and the fuzzy logic does not alter the TPSC tuning parameters. This feature can be independently Enabled or Disabled as required by the application to work with “TUNE” On-Demand tuning.	

ALARMS tab

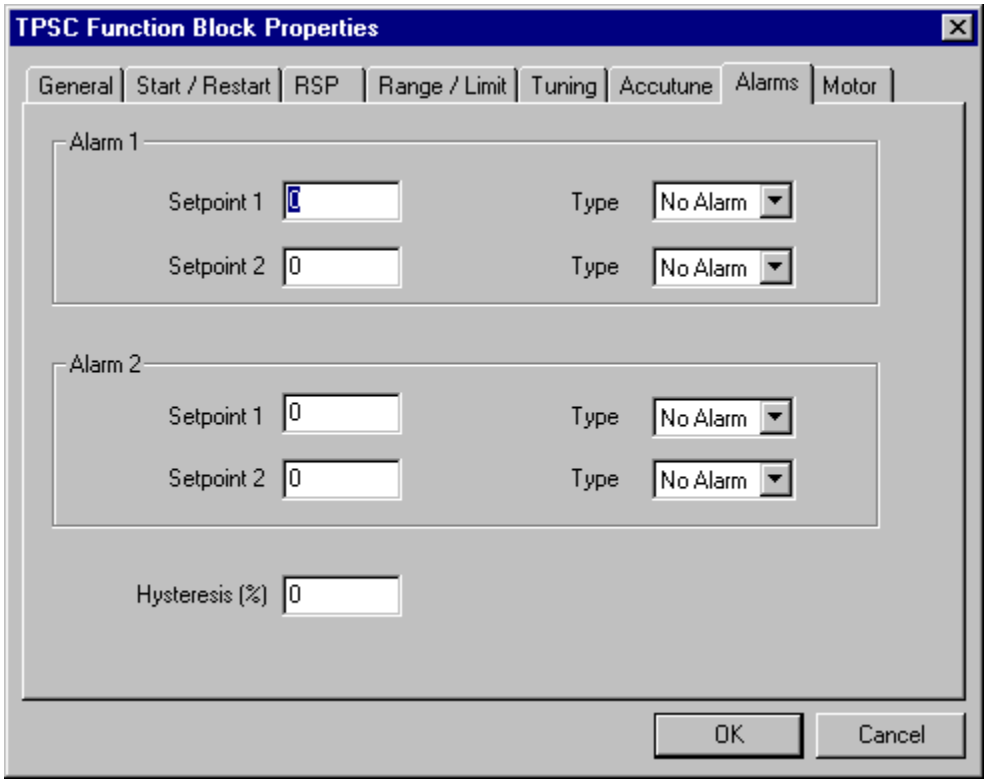
TPSC Function Block Properties
General
Start / Restart
RSP
Range / Limit
Tuning
Accutune
Alarms
Motor
Alarm 1
Setpoint 1
0
Type
No Alarm
Setpoint 2
0
Type
No Alarm
Alarm 2
Setpoint 1
0
Type
No Alarm
Setpoint 2
0
Type
No Alarm
Hysteresis (%)
0
OK
Cancel

Table 133 TPSC Alarms tab configuration parameters

Properties Group	Parameter	Index #	Parameter Description	Value or Selection
Alarm 1	**Setpoint 1**	22	**Alarm 1 Setpoint 1 Value** - this is the value at which you want the alarm type chose below to activate	–99999 to 99999 in Engineering Units Within the PV range when alarm type is PV or SP Within PV span when alarm type is DEV –5 % to 105 % when alarm type is output.
	Type	N/A	Alarm 1 Setpoint 1 Type - select what you want Alarm 1 Setpoint 1 to represent.	Selections: NO ALARM PV_HIGH High PV Alarm PV_LOW Low PV Alarm DEV_HIGH High Deviation alarm DEV_LOW Low Deviation alarm SP_HIGH High Setpoint alarm SP_LOW Low Setpoint alarm OUT_HIGH High Output alarm OUT_LOW Low Output alarm
	Setpoint 2	23	Alarm 1 Setpoint 2 Value	Same as **Alarm 1 Setpoint 1**
	Type	N/A	Alarm 1 Setpoint 2 Type	Same as **Alarm 1 Setpoint 1**
Alarm 2	**Setpoint 1**	24	Alarm 2 Setpoint 1 Value	Same as **Alarm 1 Setpoint 1**
	Type	N/A	Alarm 2 Setpoint 1 Type	Same as **Alarm 1 Setpoint 1**
	Setpoint 2	25	Alarm 2 Setpoint 2 Value	Same as **Alarm 1 Setpoint 1**
	Type	N/A	Alarm 2 Setpoint 2 Type	Same as **Alarm 1 Setpoint 1**
Alarm Hysteresis	**%**	30	Alarm Hysteresis in %	0 % to 5 %

MOTOR tab

Three Position Step control is accomplished by assigning the motor control relays physical address under this tab.

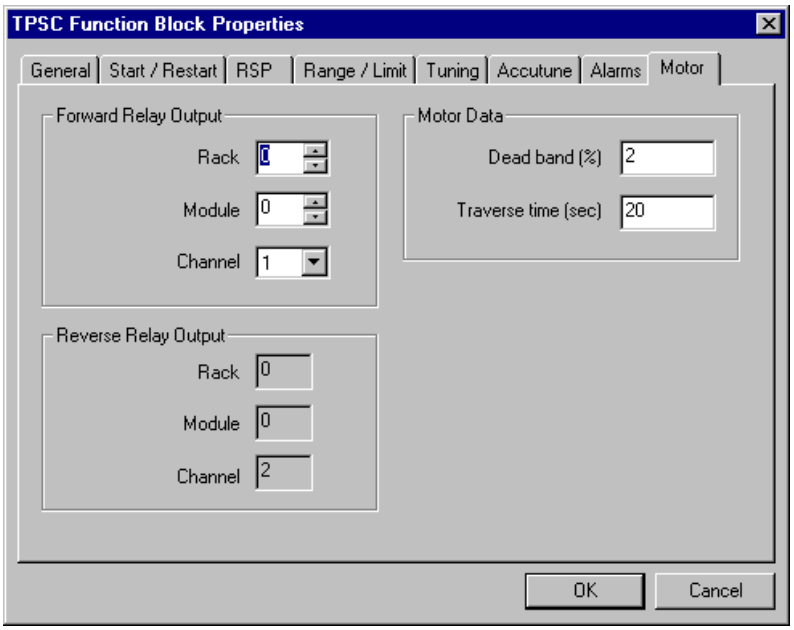

Example

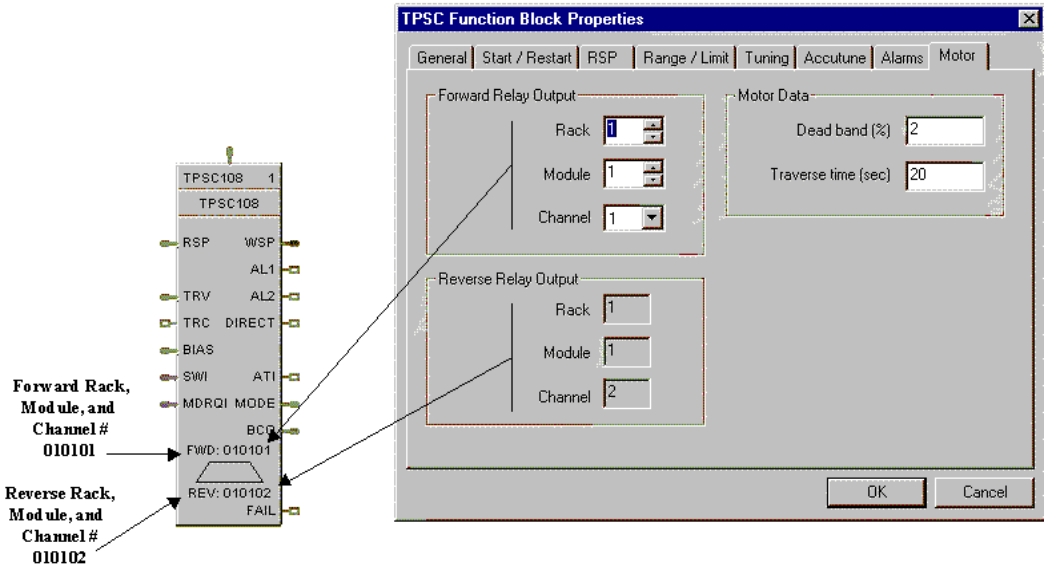

ATTENTION

TPSC output addresses are not checked for redundant assignment or mismatch with controller hardware; therefore, use caution to insure unique address and correct I/O module.

Table 134 TPSC Motor tab configuration parameters

Properties Group	Parameter	Index #	Parameter Description	Value or Selection
Forward Relay Output	**Rack**		Rack Number for Forward Motor Direction	1 to 5.
	Module		Module Number for Forward Motor Direction	1 to 16
	Channel		Channel Number for Forward Motor Direction	Odd number 1 to 15*
Reverse Relay Output	**Rack**		Rack Number for Reverse Motor Direction	1 to 5.
	Module		Module Number for Reverse Motor Direction	1 to 16
	Channel		Channel Number for Reverse Motor Direction	Even number 2 to 16*
Motor Data	**Deadband (%)**	51	Deadband is an adjustable gap in which neither output operates	0.5 % to 5 %
	Traverse Time (sec)		Motor Travel Time - the time it takes the motor to travel from 0 % to 100 %	0 to 1800 seconds
	*For ControlEdge HC900 controller's 32 Channel DO Module, outputs 17 through 32 may not be used for TPO (Time Proportioning Output), PPO (Position Proportioning Output) or TPSC (Three Position Step Output) output types.			

Example

Figure 121 shows a Function Block Diagram using a TPSC function block.

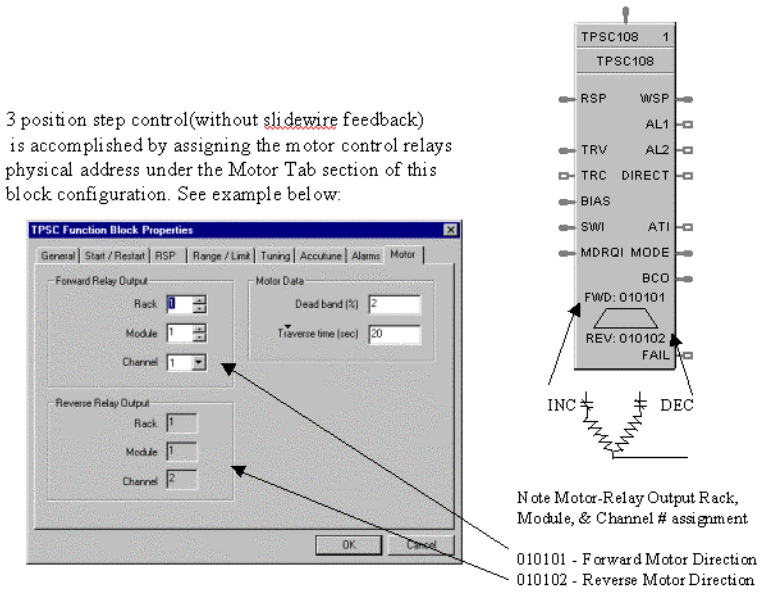

Figure 121 TPSC function block example

TRIG Trigger Function Block

Description

The TRIG label stands for Trigger or “One Shot” operation.

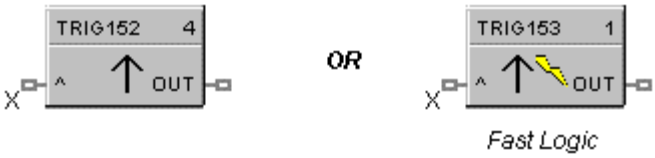

This block is part of the *Logic* and *Fast Logic* categories.

Function

Turns a Logic output (OUT) ON for one logic scan cycle, when a logic input (X) goes from OFF to ON.

- If X = ON and previous value of X was OFF, then: OUT = ON (one scan)
- Otherwise, OUT = OFF

Input

X = Trigger command signal

Output

OUT = triggered pulse

ATTENTION

The duration of the logic pulse output is one function block execution cycle. The duration of the fast logic pulse output is 100 ms, or the fast logic cycle time.

Block properties

Double click on the function block to access the function block properties dialog box.

Example

Figure 122 shows a Function Block Diagram using a TRIG function block. An OFF delay timer block output is ON as long as the RST input is logic HI (ON). It can be used for time duration but must be triggered by an ON to OFF transition on the Reset input. This can be accomplished using **Trigger blocks (TRIG)** to create one-shot pulses which last one scan cycle. The fast logic trigger pulse will last 100 ms. while the normal logic trigger pulse will last the complete scan cycle for analog blocks. Use according to application need. A Periodic timer output pulse may also be used to start the timer for the OFF delay.

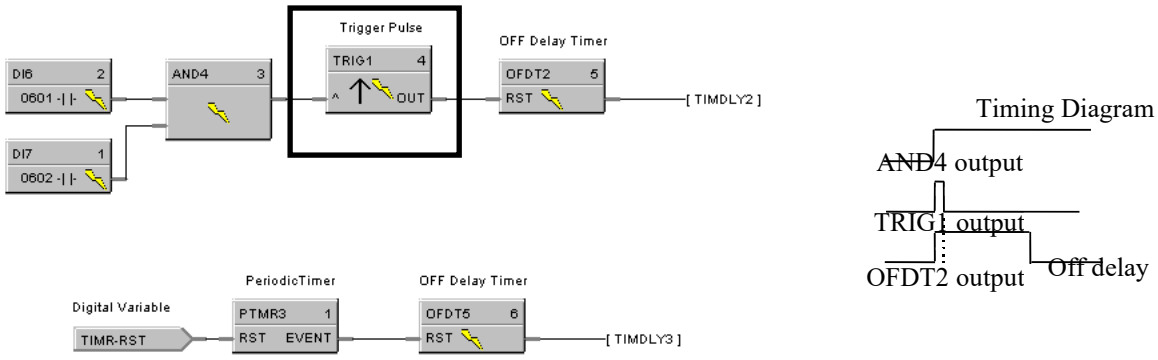

Figure 122 TRIG function block example

TRND Trend Rate Function Block

Description

The **TRND** label stands for **Trend Rate.**

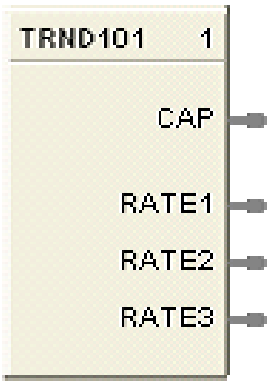

This block is part of the *Auxiliary* category.

Function

The trend block is used to configure up to three storage rates for the ControlEdge HC900 trend backfill (historical data collection) feature.

Only one trend block is allowed in a configuration.

Inputs

None.

Outputs

CAP = storage capacity in hours

RATE1 = time in seconds of the first data storage sample rate

RATE2 = time in seconds of the second data storage sample rate

RATE3 = time in seconds of the third data storage sample rate

Configuration parameters

Double clicking the block will open the dialog to configure the three data storage rates.

For each of the Log Rates click on the change button. This will open another dialog that will enable setting the rate.

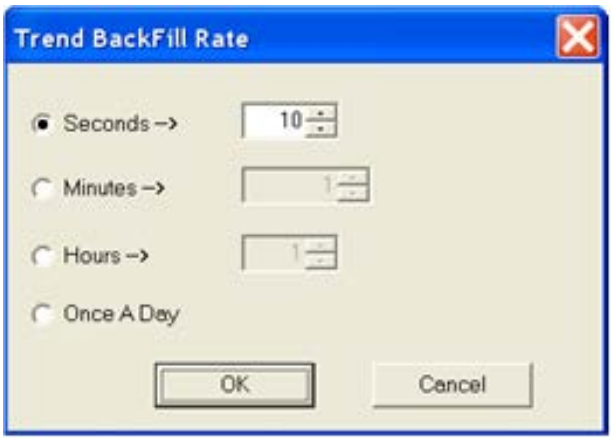

Selectable rates are sample every 10 – 59 seconds, or every 1 – 59 minutes, or every 1 – 23 hours or once per day.

Table 135 TRND block configuration parameters

Parameter	Index #	Parameter Description	Value or Selection
Log Rate 1		Sets the first of the 3 trend logging rates	10 – 59 seconds or 1 – 59 minutes or 1 – 23 hours or 1 per day
Log Rate 2		Sets the second of the 3 trend logging rates	10 – 59 seconds or 1 – 59 minutes or 1 – 23 hours or 1 per day
Log Rate 3		Sets the third of the 3 trend logging rates	10 – 59 seconds or 1 – 59 minutes or 1 – 23 hours or 1 per day

TRPT Trend Point Function Block

Description

The TRPT label stands for Trend Point.

This block is part of the *Auxiliary* category.

Function

The trend point block is used to configure the data points to be stored by the ControlEdge HC900 trend backfill (historical data collection) feature.

The data collection rate for the points configured in the block is determined by the output pin of the **TRND** block that it is connected to.

Inputs

X = time in seconds of the data storage rage for point in this block.

Outputs

None

Configuration parameters

There is a global parameter found under the HC Designer Edit menu to select whether trend points are to be configured by Modbus address or by Signal Tag. Depending on this choice double clicking the block will open one of the two following dialogs will open to configure the points to be trended by this block.

In either case, points are added by selecting the line and clicking on “Add to list”. Each trend point block can support up to 50 points. The trend function will support up to 250 points.

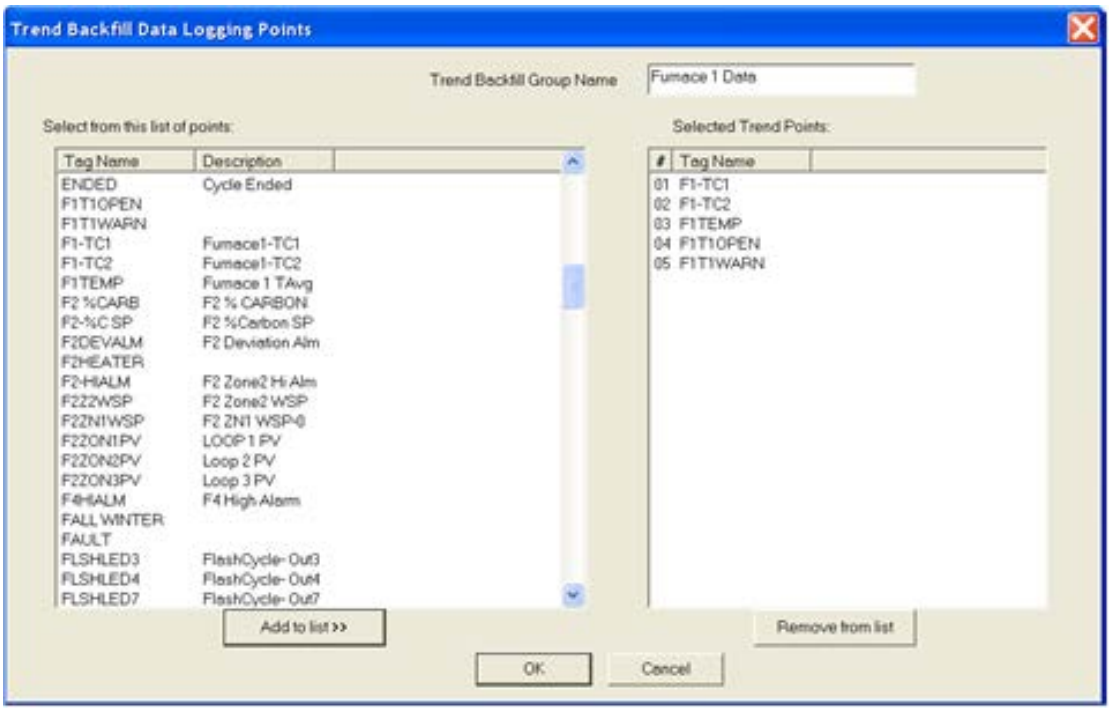

Figure 123 TRPT Dialog to configure points by signal tag

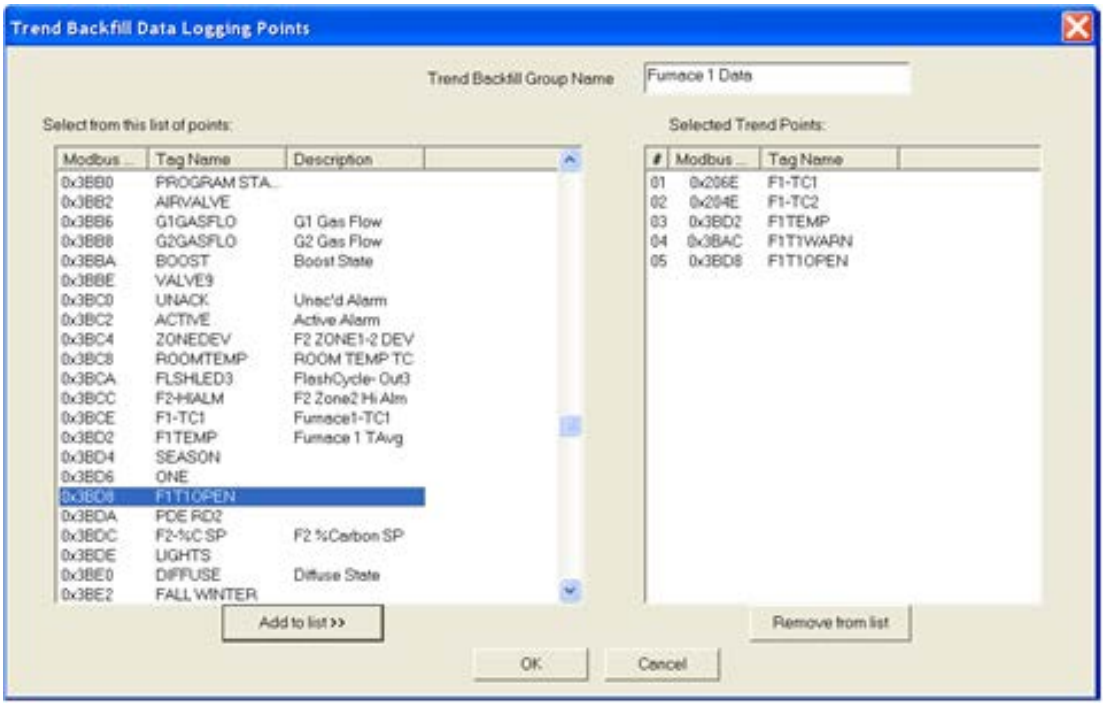

Figure 124 TRPT Dialog to configure points by Modbus Address

Example

This example shows how multiple trend point blocks are attached to a single trend block to create different trend groups at the three rates.

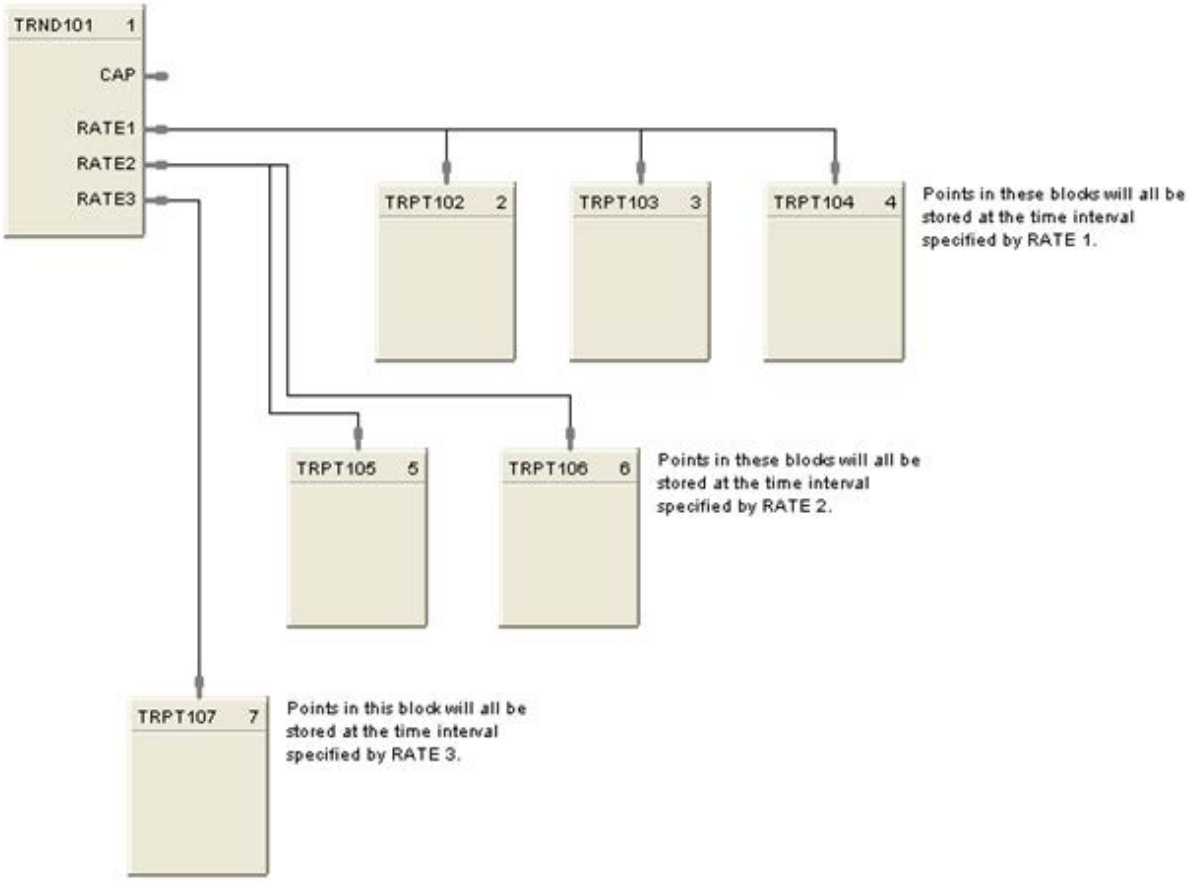

Figure 125 TRND and TRPT function block example

UIO-AI Function Block

Description

The UIO - AI label stands for Universal IO Analog Input.

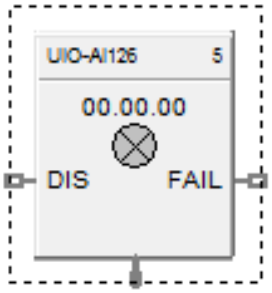

This block is part of the *I/O Blocks* category.

Function

Reads value of an UIO-Analog Input from a specified real I/O address. Convert analog input value to corresponding output (OUT) in engineering units based on the necessary scaling and conversions performed.

LINEAR - Converts analog input value to corresponding output in units based on a linear 0 % to 100 % scale and specified high and low range values +/-10% over range.

OUT = Scale x Input value + Bias
where:

$$\text{Scale} = \frac{\text{High range value - Low range value}}{100}$$

Input value = Analog Value in percent

Input

Analog value from specified real I/O address.
DIS = disable the UIO AI channel

Output

OUT = Analog Input value in engineering units.
FAIL = Digital status of channel
Digital Low (0) = OK
Digital High (1) = failed input channel

Configuration parameters

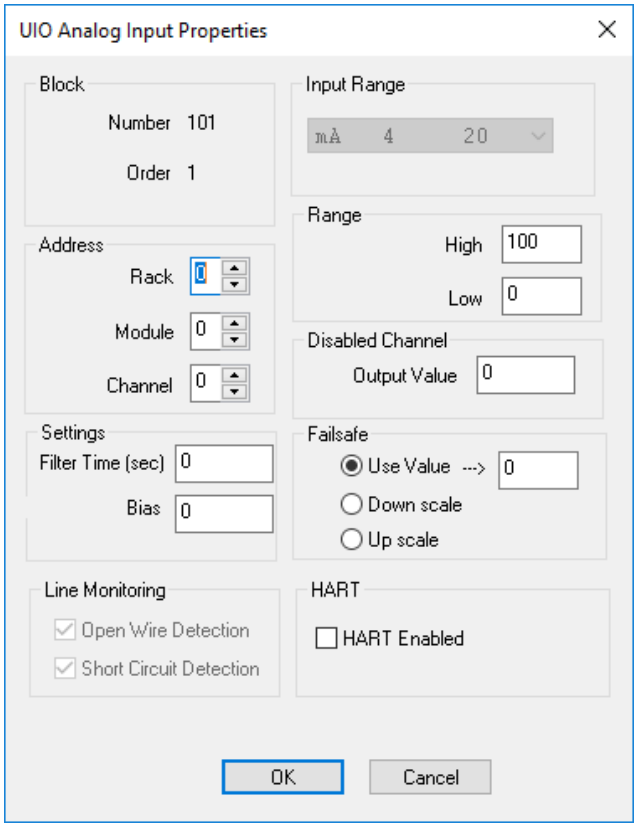

Table 136 UIO-AI configuration parameters

Properties Group	Parameter	Index #	Parameter Description	Value or Selection
Block	Order	N/A	Execution Order for Block	Read Only.
Address	Rack		This is the address of the selected Rack.	Enter a value: from 1 to 12
	I/O Module		Address of selected I/O module	Enter a value: from 1 to 12
	Channel		Channel on selected I/O Module	Enter a value: 1 to 16, depending on module type.
Input Range	Input Range	N/A	input range 4-20 mA	
Range	High Range Value	N/A	For Linear Inputs Only - output value that corresponds to 100 % input value For example: Actuation Input = 4-20mA Process variable = Flow Range of Flow = 0 to 250 gal/min High Range Display Value = 250	Enter a value: - 99999 to 99999 Default = 100

			Low range Display Value = 0 Then 20mA = 250, 4mA = 0	
	Low Range Value	N/A	For Linear Inputs Only - output value that corresponds to 0 % input value For example: See "High Range Value"	Enter a value: - 99999 to 99999 Default = 0
Disable Channel	Output Value	8	The output value when the AI channel is disabled. Disable = ON	Enter a value Default = 0
Settings	Filter Time (sec)	N/A	A software digital filter is provided for the input designated to smooth the input. You can configure the first order lag time constant from 1 to 120 seconds. 0=no filter	Enter a value: 0 to 120 seconds
	Bias	7	Bias is used to compensate the input for drift of an input value due to deterioration of a sensor, or some other cause.	Enter a value: - 99999 to 99999
Failsafe	Use Value field	N/A	The output value to which the output will go to protect against the effects of failure of the controller or no communication to IO module.	Enter a value in Engineering Units - 99999 to 99999
	Use Value	N/A	Use the value entered in the appropriate field.	Click on Radio button to select
	Downscale	N/A	**LINEAR** OUT = Value set at "Low range value" field.	Click on Radio button to select
	Upscale	N/A	**LINEAR** OUT = Value set at "High range value" field.	Click on Radio button to select
Line Monitoring	Short circuit Detection Open Wire Detection	N/A	Short circuit detection check enable Open Wire detection check enable	Read only
HART	HART Enabled	N/A	Check this box to use HART	Select “HART Enabled” check box to enable or disable HART IP functionality.
	Channel Lock Enabled	N/A	Block Writes from Field Device Manager (FDM).	

Note: The HART functionality on Channel 6 supports only from the UIO module hardware revision D and above. Ensure that the right Module is installed in the rack to use Channel 6 for HART. The module hardware revision can be found on the backside (light pipe side) of the UIO module.

Example

The below figure shows Function block diagram:

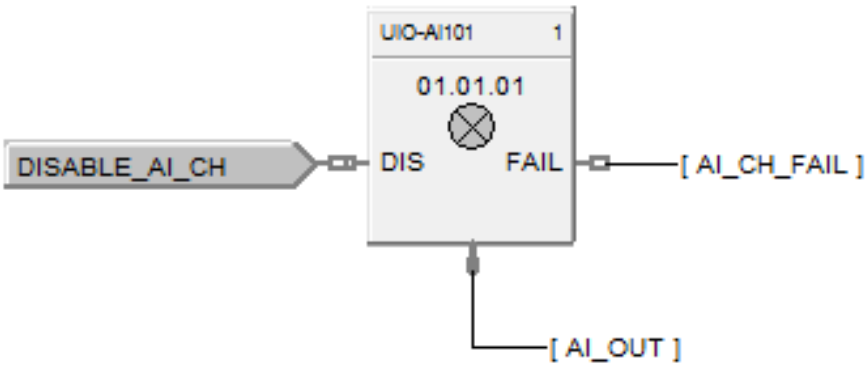

Figure 126 UIOAI function block example

UIO-AO Function Block

Description

The **UIO-AO** label stands for **Universal Analog Output**.

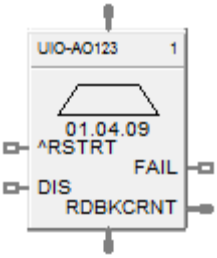

This block is part of the *I/O Blocks* category.

Function

Range High and Range Low are used to specify the Engineering Unit values for 100 % and 0 % of this block's input span. For reverse outputs, Range High may be set to a value less than Range Low.

The output range high and range low values (4-20 maximum) set the milliamp output values that correspond to the 0 % to 100 % span limits of the inputs.

Note:

- Currently maximum of 400 UIO AO channels supported in one system/CDE
- Safety UIO module will drive configured failsafe value only when IO module lose communication to controller else it will drive field value to unpowered for any other IO module diagnostic faults.

Input

X = Input Analog Signal

^RSTRT = Restart Signal –

When used, a positive (rising) input pulse releases OUT from its failsafe value and FAIL pin from its ON state. **Reset to this pin is MUST** for clearing this channel fault after repair. This allows for the replacement or repair of the failed AO module or failure condition and operator controlled release.

DIS = Disable Signal – When used and made ON, disables the AO Channel and results in disabling of ^RSTRT functionality. If DIS pin left unconnected or made OFF, results in Normal Operation i.e. it enables the function block.

Output

OUT = Converted value sent to specified real I/O address (mA).
FAIL = Failed Output indication - Channel Error

RDBKCRNT = Read back current (in mA)

Block properties

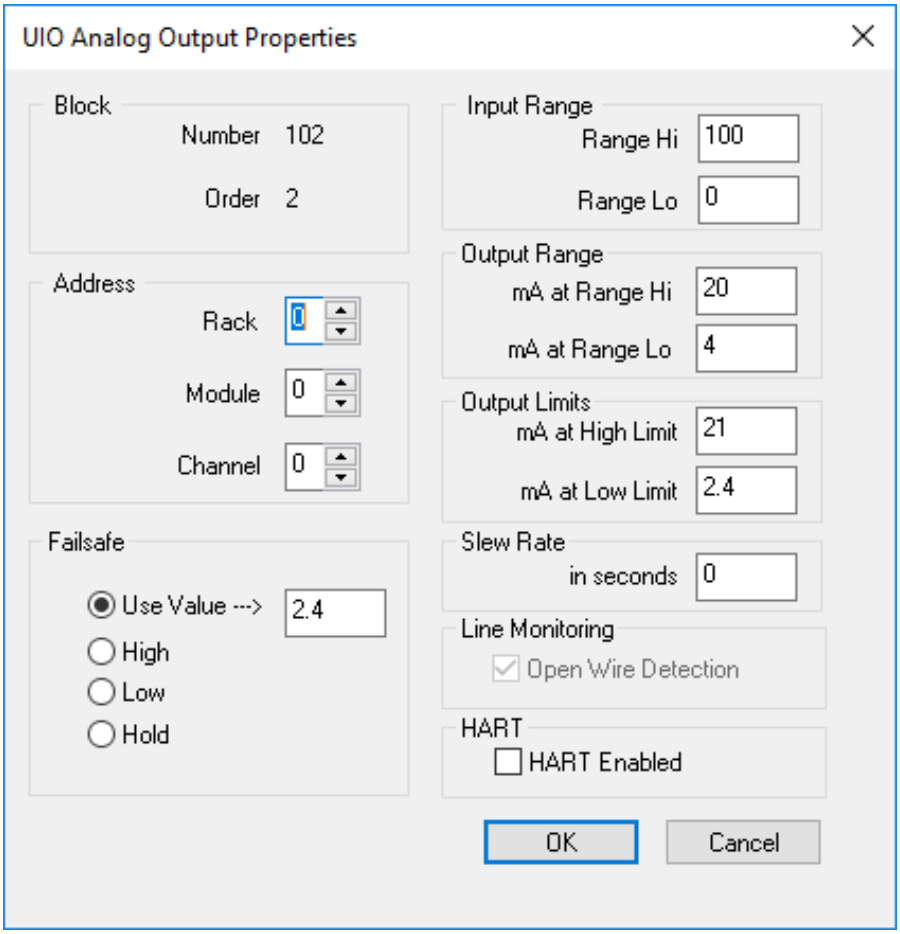

Double click on the function block to access the function block properties dialog box.

Configuration parameters

AO's Address starts at Module 4.

Table 137 Analog output configuration parameters

Parameter	Index #	Parameter Description	Value or Selection
Block Order	N/A	Execution Order for Block	Read Only
Rack Address		This is the address of the selected Rack.	1 to 12
I/O Module Address		Address of selected I/O module	1 to 12
Channel Address		Channel on selected I/O Module	9 to 16
Range Hi	5	High Range Value Engineering Unit - value of input that corresponds to 100 % output value	99999 to 99999 Default = 100
Range Low	6	Low Range Value Engineering Unit - value of input that corresponds to 0 % output value	99999 to 99999 Default = 0.0
mA at range High	7	Value of mA output that corresponds to 100 % output signal (for example: 20 mA)	3 to 20 Default = 20
mA at Low Range	8	Value of mA output that corresponds to 0 % output signal (for example: 4 mA)	3 to 20 Default = 4
mA at range High Limit	N/A	Value of mA that you want to set the High Range Limit	2.4 to 21 Default = 21
mA at Low Range Limit	N/A	Value of mA that you want to set the Low Range Limit	2.4 to 21 Default = 2.4
Failsafe Value	N/A	USE VALUE sets the output to the programmed value when failure is detected.	0 to 21 mA Default = 0
Failsafe Type	3	Type of Failsafe	**High -** sets the output of the block to the High Output Range Value when failure is detected. Default Value: 20 mA **Low** - sets the output of the block to the Low Output Range Value when failure is detected. Default Value: 4 mA **Hold** - maintains the last value of the

			block just prior to the failure being detected Click on Radio Button to select
Slew Rate in seconds	11	Slew Rate is the maximum rate of change required to drive the output from full OFF (0% - typically 4 mA) to full ON (100% - typically 20mA). The block will convert this to a maximum change of the milliamp output per execution cycle of the block.	0.0 to 99
Open Wire Detection	N/A	Open Wire detection check enable	Read only
HART Enabled	N/A	Check this box to use HART	Select “HART Enabled” check box to enable or disable HART IP functionality.
Channel Lock Enabled	N/A	Block Writes from Field Device Manager (FDM).	

Example

The below figure shows Function Block Diagram using UIO-A)

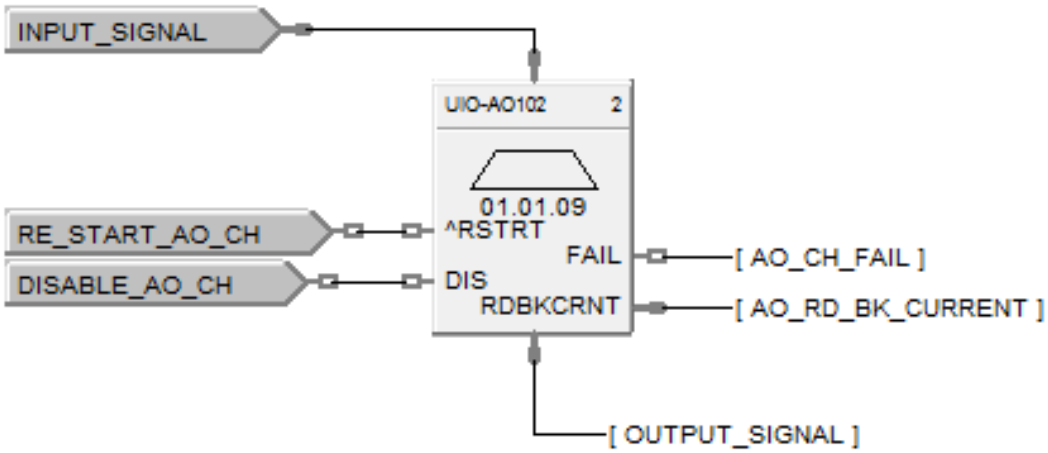

Figure 127 UIO-AO function block example

UIO-DI Function Block

Description

The UIO-DI label stands for Universal IO Digital Input.

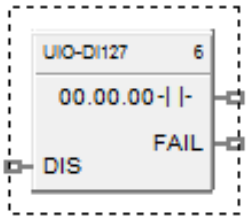

This block is part of the *I/O Blocks* categories.

Function

Provides the digital status of a digital input point and provides interface to other algorithms and functions. The output status may be inverted.

If Digital Point is ON, then OUT = ON

Input

DIS = disable the UIO DI channel

Output

OUT = Digital Signal

FAIL = Failed Input indication - Module error

Block properties

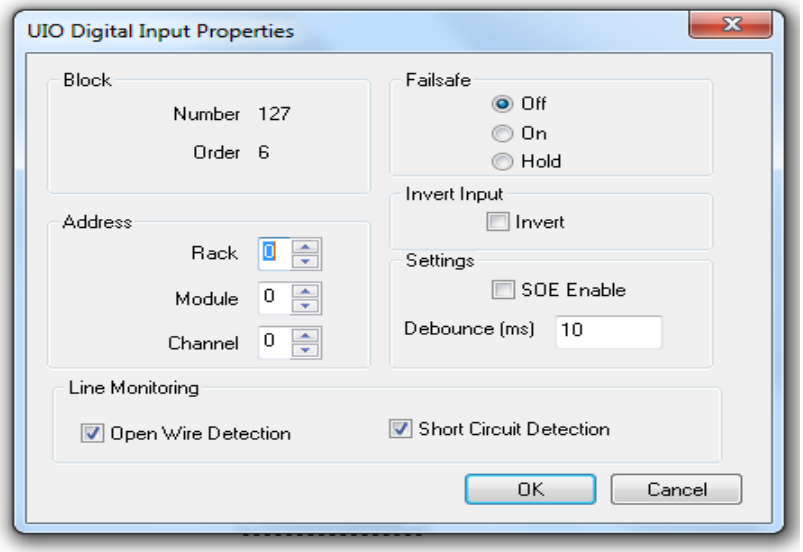

Double click on the function block to access the function block properties dialog box.

Configuration parameters

Table 138 UIO Digital input configuration parameters

Parameter	Index #	Parameter Description	Value or Selection
Rack Address	N/A	Address of selected I/O rack	From 1 to 12
I/O Module Address	0	Address of select I/O Module	From 1 to 12
Channel Address	N/A	Channel on selected I/O Module	From 1 to 16,
Failsafe ON	N/A	set the output of the block to ON when failure is detected	Click on radio button to select
Failsafe OFF	N/A	set the output of the block to OFF when failure is detected	Click on radio button to select
Failsafe HOLD	N/A	hold the output at the last value just prior to the failure being detected	Click on radio button to select
Invert	4	If INVERT is selected, OUT = inverse of physical input. The slash will be present in the CONTACT symbol only when the invert box is selected on the dialog box.	
Debounce (msec)	N/A	DI Debounce time 0= no debounce	Enter a value: 0 to 50 milliseconds
SOE Enable*	N/A	Enables Sequence of events (SOE events will be generated even in channel disabled state for field value changes)	Click on check box to enable SOE
Short circuit Detection Open Wire Detection	N/A	Short circuit detection check enable Open Wire detection check enable	Click on Radio to select or deselect

* For proper SOE operation, a Signal Tag must be direct connected to Output Pin.

Example

The below figure shows a Function Block Diagram using a UIO-DI function block.

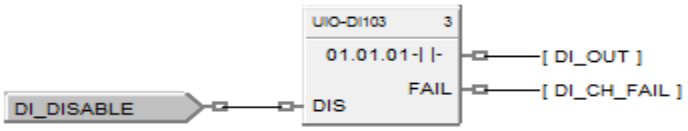

Figure 128 **UIODI function block example**

UIO-DO Function Block

Description

The UIO-DO label stands for Universal Digital Output.

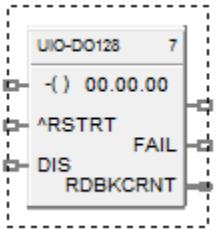

This block is part of the *I/O Blocks* categories.

Function

Provides a digital status from the algorithms and functions to a physical logic output.
The output status may be inverted.

Note:

- Safety UIO module will drive configured failsafe value only when IO module lose communication to controller else it will drive field value to unpowered for any other IO module diagnostic faults.
- It is required to reset DO channel to resume from failsafe state for new DO block after hotstart.
- In the openwire condition, performing reset on RUIO DO, channel status become healthy for 9 sec and then detects the openwire. During this period output changes as per the input.

Input

X = Input Status Signal

^RSTRT = Restart Signal – When used, a positive (rising) input pulse releases OUT from its failsafe value and FAIL pin from its ON state. **Reset to this pin is MUST** for clearing this channel fault after repair. This allows for the replacement or repair of the failed DO module or failure condition and operator controlled release.

Note: Restart Signal must be maintained in **ON** state for 3-times the controller cycle-time to clear the fault.

DIS = Disable Signal – When used and made ON, disables the DO Channel and results in disabling of ^RSTRT functionality. If DIS pin left unconnected or made OFF, results in Normal Operation i.e. it enables the function block

Output

FAIL = Failed Input indication - Module error

OUT = Physical Output Value

RDBKCRNT = Read back current (in mA). This values will have deviation of 1 to 20mA as field current goes high.

Block properties

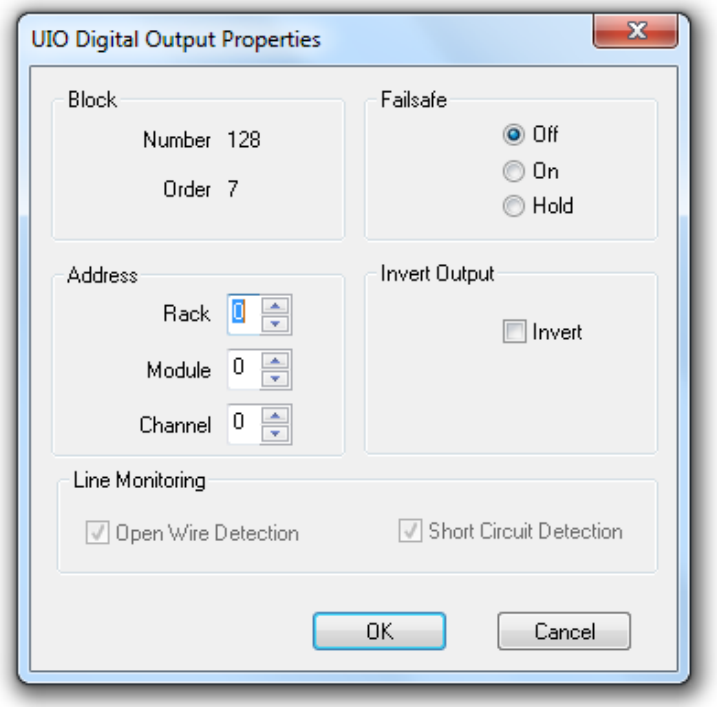

Double click on the function block to access the function block properties dialog box.

Table 139: Configurable Parameters UIO DO

Parameter		Parameter Description	Value or Selection
Rack Address	N/A	Address of selected I/O rack	From 1 to 12
I/O Module Address	0	Address of select I/O Module	From 1 to 12
Channel Address	N/A	Channel on selected I/O Module	From 1 to 16.
Failsafe ON	N/A	set the output of the block to ON when failure is detected	Click on radio button to select
Failsafe OFF	N/A	set the output of the block to OFF when failure is detected	Click on radio button to select
Failsafe HOLD	N/A	hold the output at the last value just prior to the failure being detected	Click on radio button to select
Invert	4	If INVERT is selected, OUT = inverse of physical input. The slash will be present in the CONTACT symbol only when the invert box is selected on the dialog box.	

Short circuit Detection Open Wire Detection	N/A	Short circuit detection check enable Open Wire detection check enable	Read only

Example

The below figure shows a Function Block Diagram using a UIO-DO function block.

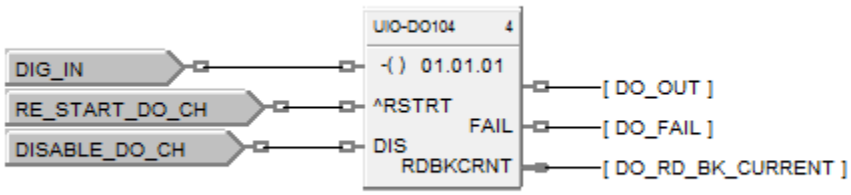

Figure 129 UIODO function block example

UPDN Up/Down Function Block

Description

The UPDN label stands for UP/DOWN Counter.

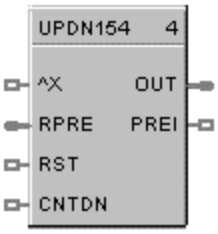

This block is part of the *Counters/Timers* category.

Function

The output counts the number of rising edge logic transactions on the input to the block up to a preset value (RPRE or LPRE). When the preset value is reached, a logic output (PREI) is enabled until a Reset input (RST) resets the block. Value may be set to increase to the preset value or decrease from the preset value.

Inputs

^X = Positive Edge Detect Count Input
RPRE = Remote Preset
RST = ON resets the count
CNTDN = ON counts down

Outputs

OUT = Output
PREI = Preset Indicator

Block properties

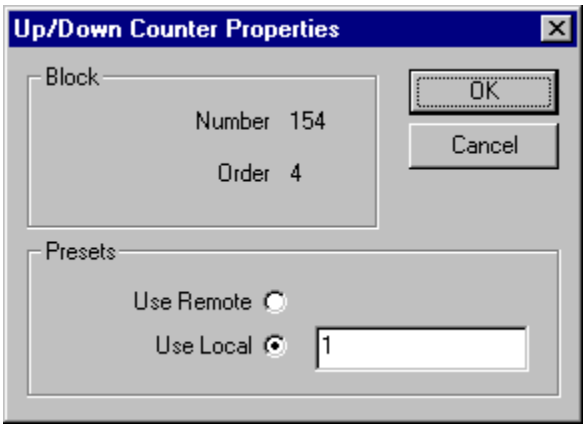

Double click on the function block to access the function block properties dialog box.

Configuration parameters

Table 140 Up/down configuration parameters

Properties Group	Parameter	Index #	Parameter Description	Value or Selection
Presets	**Local Preset**	0	Local Preset	1 to 99999
Use Remote Preset		1	On selects remote preset	Click on Box to select

Example

Figure 130 shows a Function Block Diagram using a UPDN function block. This example uses a Totalizer function block as a retentive timer. If a fixed input of 1 is provided to the block using a Numeric Constant, the totalizer will time up to 1 at the input rate selected (per sec, per min., per hr, or per day). For example, if the "per hr" rate were selected, the output would be 1.0 after 1 hour, 2.0 after 2 hours, etc, up to the Preset value.

A counter is shown to count the number of pump cycles (On to OFF transitions).

The P4-RESET Digital Variable is used to reset the timer and counter

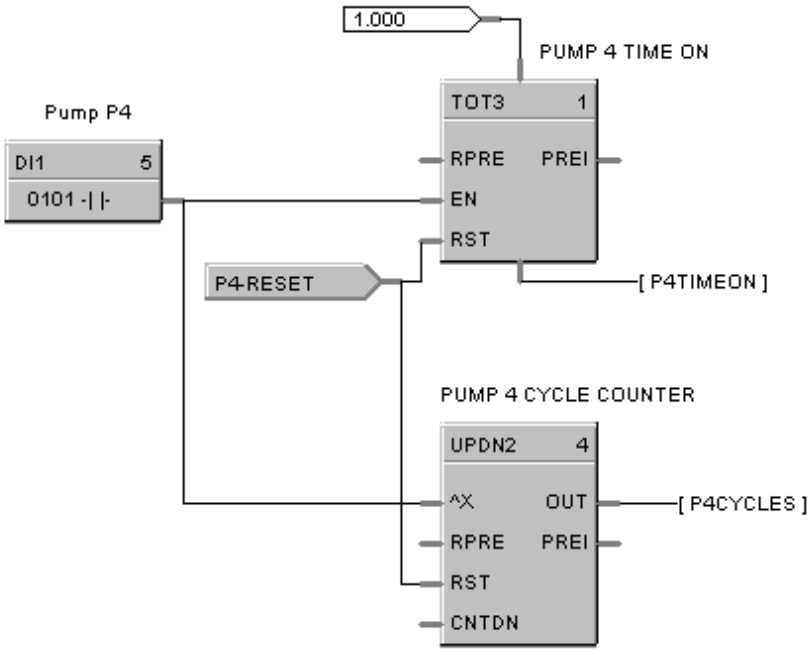

Figure 130 UPDN function block example

VLIM Velocity Limiter Function Block

Description

The VLIM label stands for Velocity (Rate) Limiter.

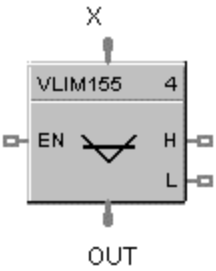

This block is part of the *Auxiliary* category.

Function

Limits the rate at which an analog input value (X) can change, when a digital input signal (EN) is ON. Individual rate of change limits are configured for an increasing and a decreasing X, respectively.

Separate digital status outputs indicate when High (H) or Low (L) rate limits are active.

- If EN = OFF or system state = NEWSTART*, then:
  OUT = X,
  L = OFF,
  H = OFF.
- If EN = ON and OUT < X, then:
  OUT moves toward X at Increasing RATE limit,
  L = OFF,
  H = ON until OUT = X.
- If EN = ON and OUT > X, then:
  OUT moves toward X at Decreasing RATE,
  L = ON until OUT = X,
  H = OFF.

* **Newstart** is the first scan cycle following the cold start of the controller.

Input

X = Analog Value (Primary Input)

EN = Enable Input command

Output

OUT = Rate Limited Input Value

H = High Rate alarm indication

L = Low Rate alarm indication

Block properties

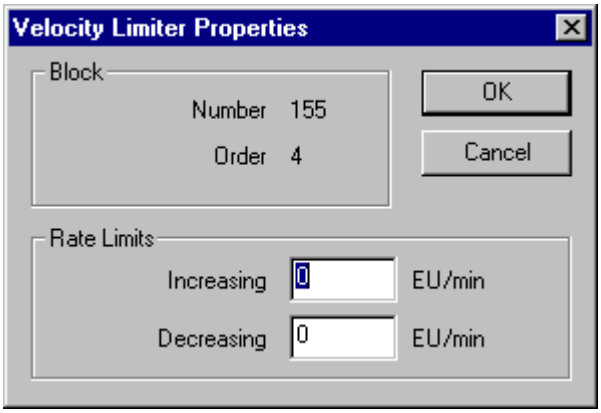

Double click on the function block to access the function block properties dialog box.

Configuration parameters

Table 141 VLIM Configuration Parameters

Properties Group	Parameter	Index #	Parameter Description	Value or Selection
Set Limits	**Increase Rate Limit**	0	Limits the *increasing* rate at which the analog input value can change	0 to 99999 (eu/min)
	Decrease Rate Limit	1	Limits the *decreasing* rate at which the analog input value can change	0 to 99999 (eu/min)

Example

Figure 131 shows a VLIM function block that limits the increasing or decreasing rate at which the output can change based on user specified limits when the Enable input is ON (1).

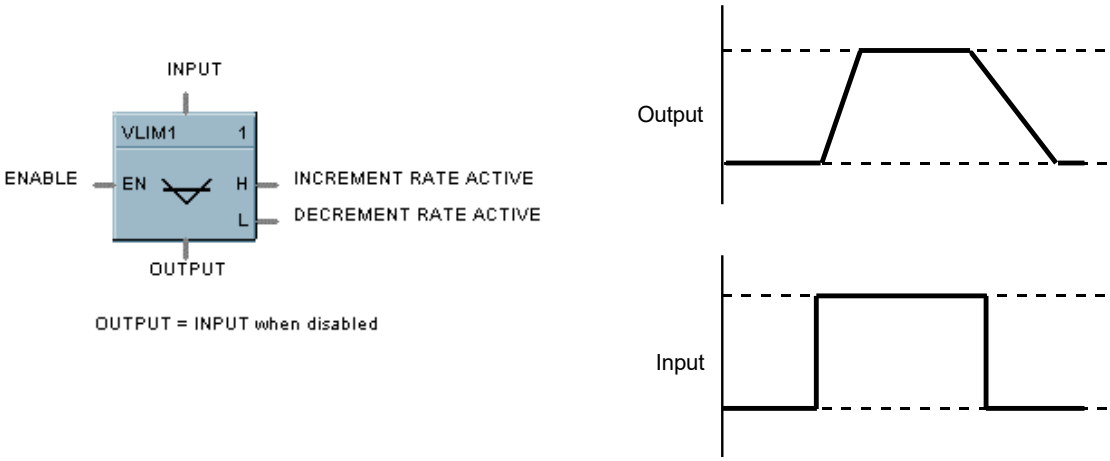

Figure 131 VLIM function block example

WCON Write Constant Function Block

Description

The WCON label stands for Write Constant. This block is part of the Auxiliary category.

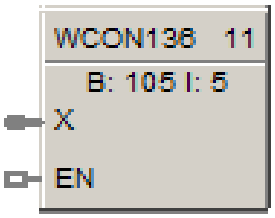

Function

Writes the numerical value of selected configuration parameter to a given control block. If EN is ON, the selected parameter is changed to the value of X.

ATTENTION

Not valid for all blocks. Also, for SIL-compliant controllers the Write Constant function block may be used on both Process and Safety worksheets, but the selected function block to write to must be located on a Process worksheet. Writing to blocks located on a Safety worksheet is not allowed, unless the Write Constant function block itself is on a Safety worksheet.

Input

X = Value to be written (invalid for parameters of type other than BOOL or REAL)

EN = Enable command

Configuration parameters

Parameter	Index #	Parameter Description	Value or Selection
Block Number	N/A	Number of control block that contains desired configuration parameter	101 to 500(CPU C30) 101 or 2100(CPU C50) 101 to 5100 (CPU C70/C75)
Parameter Index #	N/A	Index number of configuration parameter to be modified	Select the index number of the required parameter from the specific function block reference data

1. Double-click on the function block to access the "Write Constant" dialog shown below:

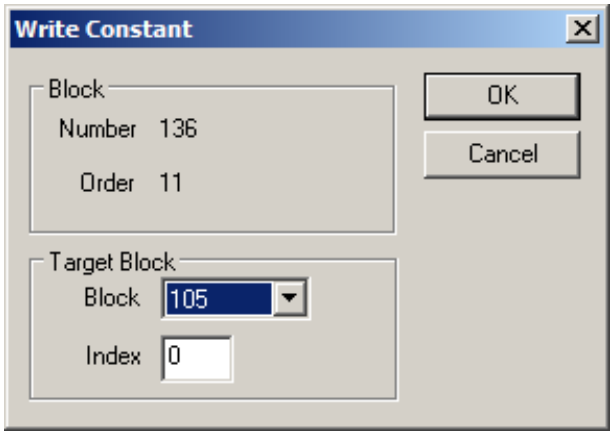

2. Select the Block Number of the Target Block from the pull-down list. Note that function blocks located on a Safety worksheet in an SIL-compliant configuration will not be listed, unless the Write Constant block is on a Safety worksheet itself.

3. Enter the Index number of the desired configuration parameter of the Target Block. Check the block's properties page for details.

4. Click on the OK button to complete the configuration.

   The block number and parameter index will appear on the front of the WCON function Block; B:105 I:5 in the above example.

WTUN Write Tuning Constants Function Block

Description

The WTUN label stands for Write Tuning Constants.

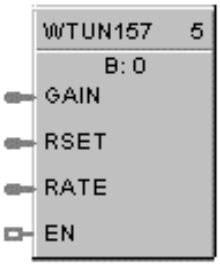

This block is part of the *Loops* category.

Function

Writes the numerical value of Gain, Rate, and Reset to a Target PID, TPSC, or CARB block without any operator interaction.

Select the target block number from the specific function block diagram and enter it in the appropriate field in the “Write Tune Constants” dialog box.

- If EN is ON, then the tuning constants are set to the Gain, Rate, and Reset input values..
- WTUN values written to Loop Tuning Set #1 only.
- WTUN will only send values within each Range Limit.

ATTENTION

Invalid for block number whose type is other than PID, CARB, or TPSC.

If the target block is in AUTO mode, tuning parameter change will cause a bump in the output.

If any input value is “out-of-range”, no values will be written.

Value to GAIN/ PB input applies to active Tuning Constant.

Input

GAIN = Value for GAIN tuning constant
RSET = Value for RESET tuning constant (Integration time)
RATE = Value for RATE tuning constant (Derivative time)
EN = Enable command

ATTENTION

The three analog inputs can originate as recipe items or be calculated for adaptive control.

Target block number

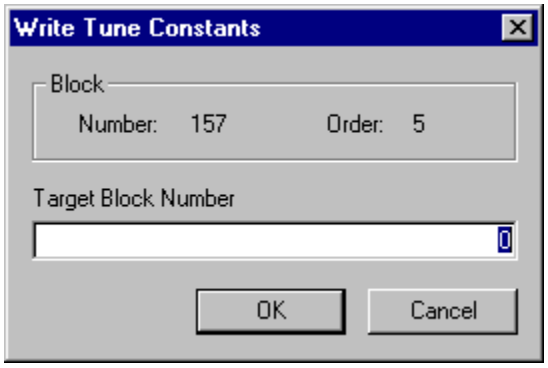

Double click on the function block to access the “Target Block Number” dialog box.

Enter the Target Block number in the appropriate field. Selections are from 101 to 500(Model C30), 101 to 2100 (Model C50), 101 to 5100 (Model C70/C75).

Example

Figure 132 shows a Function Block Diagram using a WTUN function block to write Tuning Parameters to a PID function block.

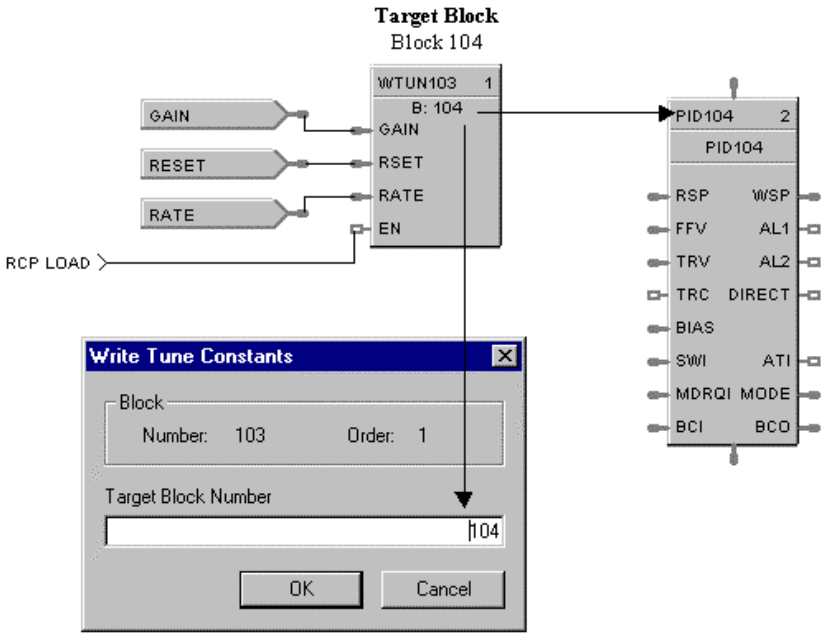

Figure 132 WTUN function block example

WVAR Write Variable Function Block

Description

The **WVAR** label stands for **Write Variable**. This block is part of the Auxiliary category.

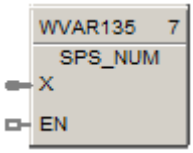

Function

Writes a new value to a selected Variable number.

If EN is ON, then the Variable selected is set to the value of X. (For example: X = a constant value)

For SIL-compliant controllers the Write Variable function block may be used on both Process and Safety worksheets. Writing to Variables located on a Safety worksheet is not allowed, unless the Write Variable function block itself is on a Safety worksheet .

Designer software V6.005 and above provides connections from the process to safety worksheet variables for NON-critical safety functions. The safety variable must be enabled for non-critical safety functions; this variable attribute places the variable into the Select variables list on process worksheets.

Inputs

X = Value to be written to the selected variable

EN = Enable command

Configurable Parameter

Target write variable number

1. Double-click on the function block to access the "Write Variable Number" dialog shown below:

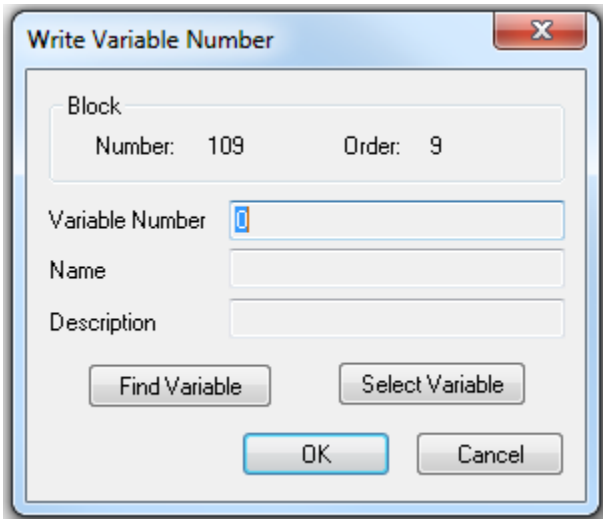

2. Click on the Select Variable button to access the “Select Variable” dialog shown below:

Once a variable is assigned the "Find Variable" button will change the worksheet focus to the associated variable.

> Selecting the OK button keeps new worksheets focus.

> Selecting the "Cancel" button returns the worksheet focus to the WVAR worksheet.

This functionality allows the configurator designer to verify the associated variable connection.

Note: If the WVAR's variable is deleted from the configuration the WVAR association will be lost/ unassigned.

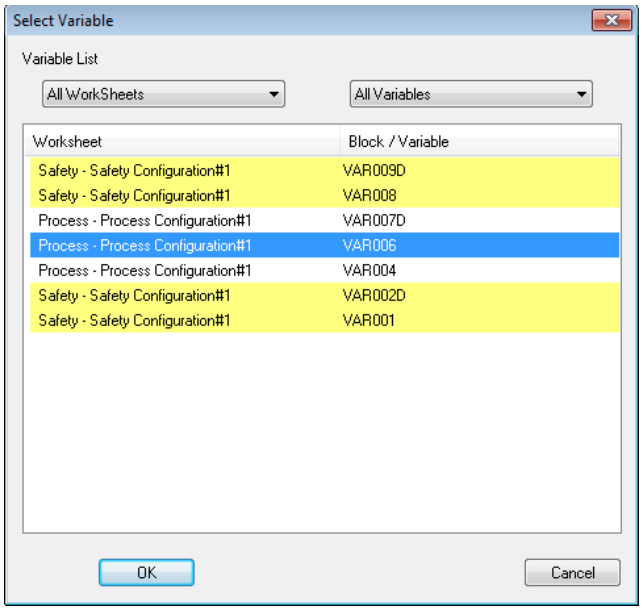

3. From the pull-down selector select from:
   - All WorkSheets
   - All Variables
   - Analog Variables
   - Digital Variables
4. In the All Worksheets list box select the desired worksheets list -"All WorkSheets", "Process WorkSheets", "Safety WorkSheets".
5. In the list box, select the desired Variable. Note that Variables located on a Safety worksheet in an SIL-compliant configuration will only be listed if the associated variables NON-Safety Critical radio button has been enabled or, unless the Write Variable function block is on a Safety worksheet.

   NOTE: Setting enabling the NON safety Critical radio button confirms that the variable is not being used in a safety critical function.
6. Click the **OK** button to return to the “Write Variable Number” dialog.
7. Click the **OK** button to complete the configuration.

The Target block number will appear on the front of the WVAR function Block.

XFR Bumpless Analog Transfer Switch Function Block

Description

The XFR label stands for Bumpless Analog Transfer Switch.

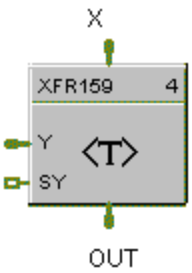

This block is part of the *Signal Selectors* category.

Function

Provide “bumpless” switching between two analog input values (X, Y) that is triggered by a digital input signal (*SY). When switched, the output ramps to the new value at a specified rate.

The rate at which the output (OUT) changes to a switched value (Y or X) is set by YRATE and XRATE configuration values, respectively.

- If SY is switched to ON, then: **OUT changes to Y value at YRATE**.
- If SY is switched to OFF, then: **OUT changes to X value at XRATE**.
- When OUT reaches the selected target input, OUT tracks the selected input (until SY changes).

Input

X = First analog value.
Y = Second analog value.
SY = Switch to Y command digital signal

Output

OUT = Selected Value

Block properties

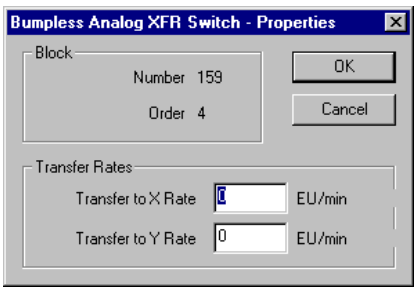

Double click on the function block to access the function block properties dialog box.

Configuration parameters

Table 142 XFR switch configuration data

Properties Group	Parameter	Index #	Parameter Description	Value or Selection
Set Transfer Rates	**Transfer to X Rate**	0	Rate at which output changes from Y to X in engineering units per minute	0 to 99999 Must be set at > = 0
	Transfer to Y Rate	1	Rate at which output changes from X to Y in engineering units per minute	0 to 99999 Must be set at > = 0

Example

Figure 133 shows a Function Block Diagram using a XFR function block. It shows a typical switch action for a XFR function block.

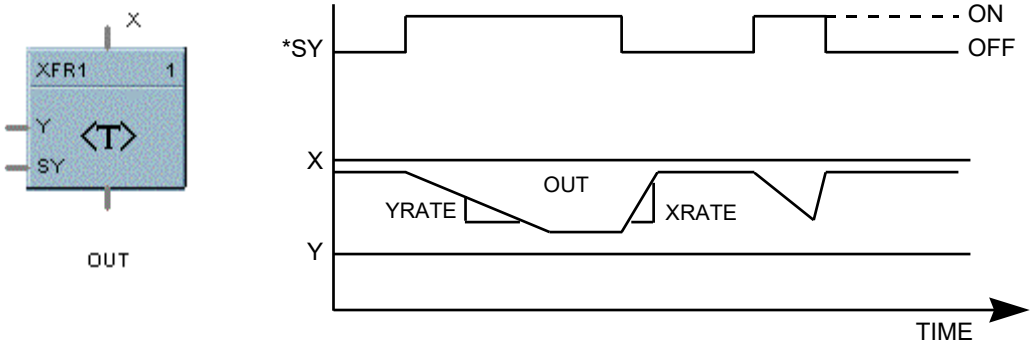

Figure 133 XFR function block example

XOR Function Block

Description

The **XOR** label stands for the **Exclusive OR** Boolean operation.

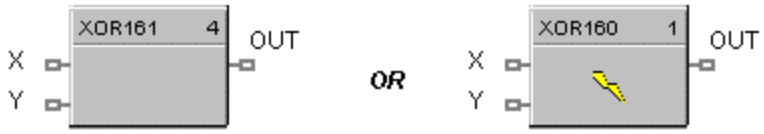

This block is part of the *Logic* and *Fast Logic* categories.

Function

Turns a digital output signal (OUT) ON if only one of two digital input signals (X, Y) is ON. Otherwise, the output is OFF.

- If X = OFF and Y = ON, then: **OUT = ON.**
- If X = ON and Y = OFF, then: **OUT = ON.**
- If X = ON and Y = OFF, or X = OFF and Y = OFF, then **OUT = OFF.**

Input

X = First Digital Signal
Y = Second Digital Signal

Output

OUT = resultant digital signal

Block properties

Double click on the function block to access the function block properties dialog box.

Example

Figure 134 shows a Function Block Diagram using a XOR function block. In the example, if pressure input 1 or 2 is high or low, flow is disabled. If only one pressure input is ON, flow is enabled.

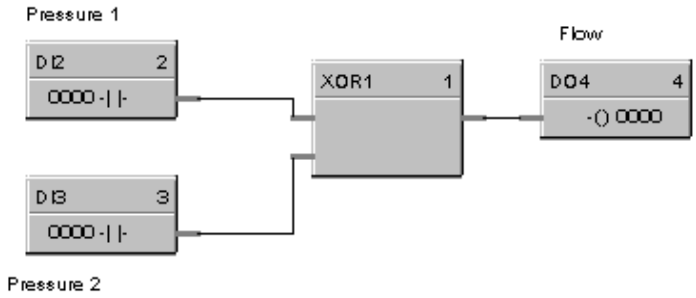

Figure 134 XOR function block example

5XYRB Function Block

Description

The 5XYRB label stands for XYR5000 base radio device status block.

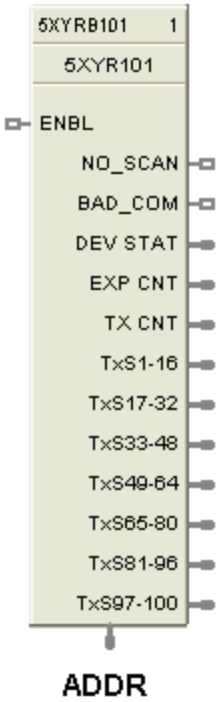

This block is a part of the *Communications* category.

Function

This block allows the ControlEdge HC900 controller to act as a Modbus host device and communicate with XYR5000 base radios via the serial port of the controller. Configuration of the ControlEdge HC900 master requires one block per base radio, up to 32 base radios or 1024 parameters maximum. Only one block may be assigned to each XYR5000 base radio device.

The block supports 10 read parameters from the XYR5000 plus it provides digital indication of communication integrity. For attached transmitters there is a separate 5XYRT block which is connected to 5XYRB via the address (ADDR) output of the 5XYRB block. Since all the parameters of 5XYRB block have fixed Modbus register addresses, there is no configuration data associated with addressing of the parameters. All outputs can be tagged in the same manner to any other function block output.

NOTE 1: To read proper values of all transmitter parameters when connecting an ControlEdge HC900 to the XYR5000 system, the XYR5000 base radio must be set to "Register Mapping Mode."

If a XYR5000 base radio device does not respond to a request, the last output value will be maintained.

NOTE 2: The output values of the 5XYRB block may be added to the Custom Modbus Map without the need to assign tags to the output pins.

Input

ENABLE = Digital input ON when XYR5000 base station is in scan. Digital input OFF when XYR5000 base station is out of scan.

Output

DEV STAT = Last read value of XYR5000 base radio device status. (O = offline, 1 = online)

EXP CNT = Number of Expected Transmitters communicating to the base station.

TX CNT = Number of Transmitters actually communicating with the base radio.

TxS1-16 = Online/Offline status of transmitters 1-16. Connect to Digital Decoder block for transmitter status.

TxS17-32 = Online/Offline status of transmitters 17-32. Connect to Digital Decoder block for transmitter status.

TxS33-48 = Online/Offline status of transmitters 33-48. Connect to Digital Decoder block for transmitter status.

TxS49-64 = Online/Offline status of transmitters 49-64. Connect to Digital Decoder block for transmitter status.

TxS65-80 = Online/Offline status of transmitters 65-80. Connect to Digital Decoder block for transmitter status.

TxS81-96 = Online/Offline status of transmitters 81-96. Connect to Digital Decoder block for transmitter status.

TxS97-100 = Online/Offline status of transmitters 97-100. Connect to Digital Decoder block for transmitter status.

NO_SCAN = Scan Indication. ON = Device is "Out of Scan". OFF = Device is "In Scan".

BAD_COM = Communications Indication. ON = Bad quality or device not defined. OFF = Good Communications.

ADDR = Connection pin used to connect the 5XYRB base radio block to the 5XYRT transmitter block.

Configuration parameters

Double click on the function block to access the function block properties dialog box.

Properties Group	Parameter	Index #	Parameter Description	Value or Selection
Configure Modbus Device	**Device Tag Name**	0	Description of XYR5000 device	16 character tag name (ASCII characters only). Device address and Tag Name must be unique within a control file.
	Modbus address	1	Address of XYR5000 base radio on the link.	Enter unique address. address, range 1 to 247. Default address = 255 which means XYR5000 base radio device will NOT be in scan
Modbus Double Register Format	Each IEEE 32-bit floating point number requires two consecutive registers (four bytes) starting with the register defined as the starting register for the information. The stuffing order of the bytes into the two registers differs among Modbus hosts. The selections are: Selection — Description — Byte order FP B — Floating Point Big Endian Format (recommended format) — 4, 3, 2, 1 FP BB — Floating Point Big Endian with byte-swapped — 3, 4, 1, 2 FP L — Floating Point Little Endian Format — 1, 2, 3, 4 FP LB — Floating Point Little Endian with byte-swapped — 2, 1, 4, 3			

Example

Figure **135** shows a Function Block Diagram using a 5XYRB function block.

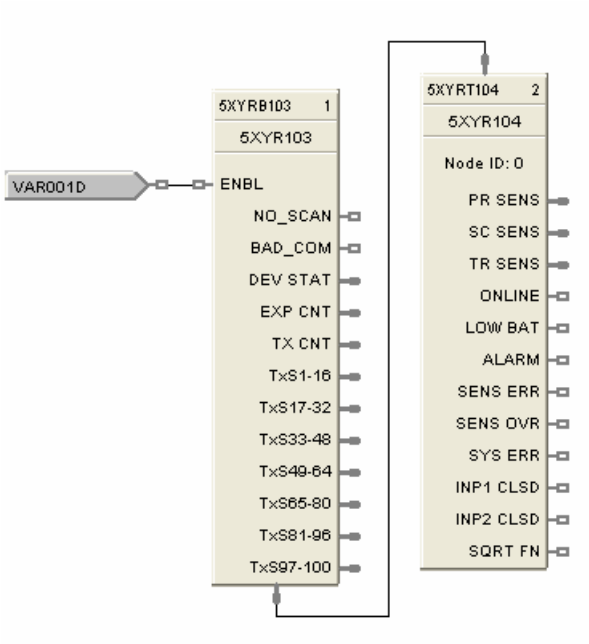

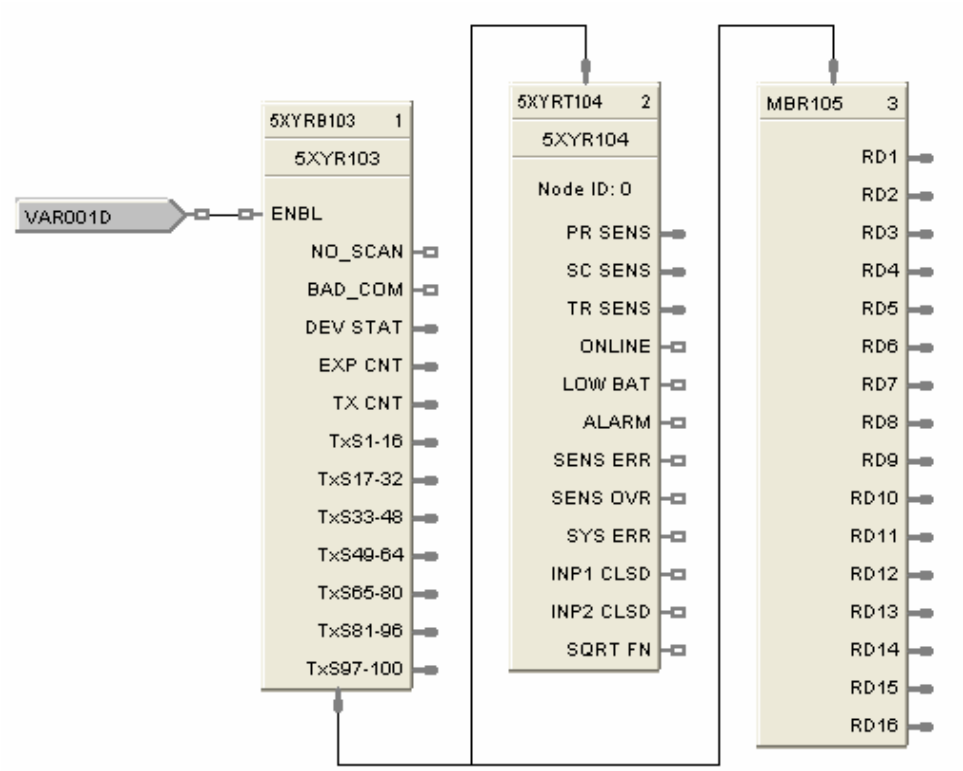

Figure 135 **5XYRB function block example**

5XYRT Function Block

Description

The 5XYRT label stands for XYR5000 Transmitter device status block.

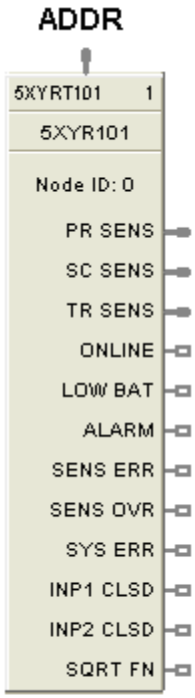

This block is a part of the *Communications* category.

Function

This communication function block expands the read capability of the 5XYRB Device function block to access parameters of XYR5000 Transmitters. 5XYRB block's ADDR output is connected to the ADDR input of this block to access all the parameters. The 5XYRT block has 12 output parameters which are supplied by 5XYRB block. Since these parameters have fixed Modbus register addresses, there is no configuration data associated with this block. All outputs can be connected or tagged in the same manner as any other function block output.

If communication between the ControlEdge HC900 and the XYR5000 base radio is lost, the last read values will be supplied on the 5XYRT outputs.

Input

ADDR = Input pin used to connect the 5XYR transmitter block to the 5XYRB base radio block. Must be connected to 5XYRB block's ADDR output pin.

Output

PR SENS = Primary Sensor Value.

SC SENS = Secondary Sensor Value.

TR SENS = Tertiary Sensor Value.

ONLINE = Transmitter online status. 1 = online, 0 = offline.

LOW BAT = Low Battery condition. 1 = low battery, 0 = battery ok.

ALARM = Alarm condition. 1 = alarm, 0 = no alarm.

SENS ERR = Sensor error condition. 1 = error, 0 = ok.

SENS OVR = Sensor over range condition. 1 = over range, 0 = ok.

SYS ERR = System error condition. 1 = system error, 0 = ok.

INP1 CLSD = switch input 1 closed. 1 = closed, 0 = open.

INP2 CLSD = switch input 2 closed. 1 = closed, 0 = open.

SQRT FN = square root function. Square root of primary Differential Transmitter output.

Configurable Parameters

Parameter	Index #	Parameter Description	Value or Selection
Transmitter Reference Name	0	Description of XYR5000 transmitter	16 character name (ASCII characters only). Device address and Tag Name must be unique within a control file.
Node ID	1	ID of transmitter	Enter node ID. (Valid Range is 1 to 100). Default ID = 0 which means data will NOT be read.

Example

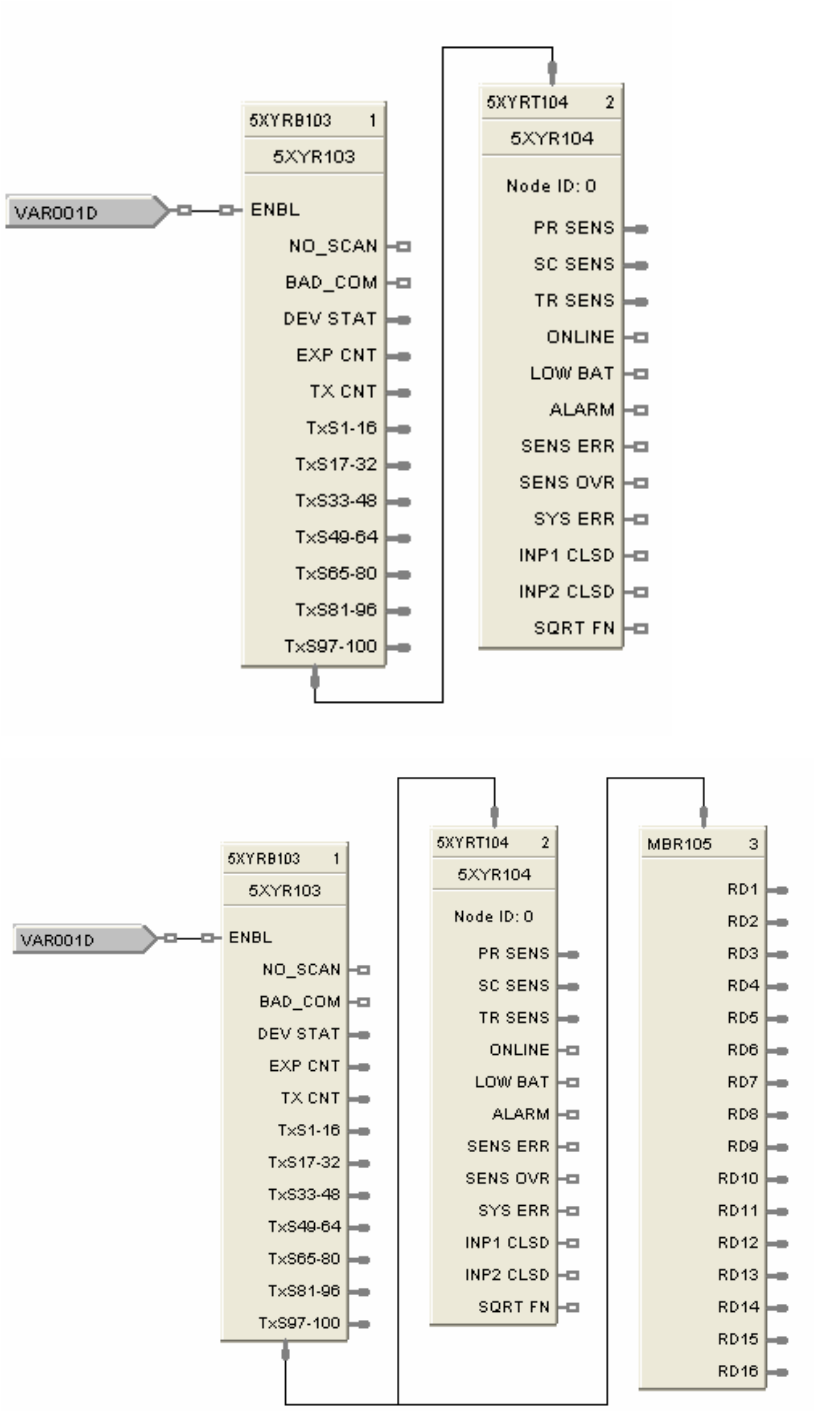

Figure 136 5XYRT function block example

6XYRT Function Block

The 6XYRT label stands for XYR6000 transmitter status block.

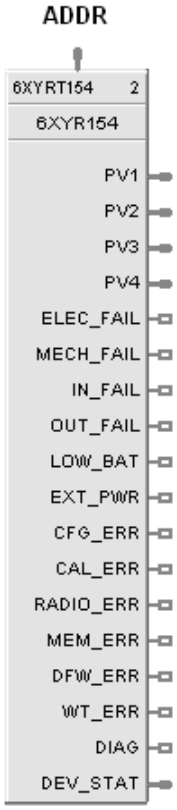

This block is a part of the *Communications* category.

Function

Use this block to read the process variables and device status of any XYR6000 transmitter. To access XYR6000 parameters, connect this block's ADDR input to the ADDR output of the XYR6000 Gateway (6XYRWG) block.

Five parameters—PV1, PV2, PV3, PV4 and DEV_STAT—are read from the XYR6000 transmitter. DEV_STAT value contains several statuses of the transmitter, and each status from DEV_STAT is assigned its own output pin of this block.

If a 6XYRWG gateway does not respond to a request from the ControlEdge HC900, the last read values will be maintained on the 6XYRT outputs.

Input

ADDR = Device IP Address from associated 6XYRWG block (must be connected to IP address output pin of a 6XYRWG block).

Output

PV1 = Last read value of process variable 1 from the specified address of PV1 register

PV2 = Last read value of process variable 2 from the specified address of PV2 register

PV3 = Last read value of process variable 3 from the specified address of PV3 register

PV4 = Last read value of process variable 4 from the specified address of PV4 register

ELEC_FAIL = Electronics failure status flag (Decoded bit 0 of DEV_STAT)

MECH_FAIL = Mechanical failure (Decoded bit 1 of DEV_STAT)

IN_FAIL = Input failure (Decoded bit 2 of DEV_STAT)

OUT_FAIL = Output failure (Decoded bit 3 of DEV_STAT)

LOW_BAT = Low battery (Decoded bit 4 of DEV_STAT)

EXT_PWR = External power (Decoded bit 5 of DEV_STAT)

CFG_ERR = Configuration Error (Decoded bit 6 of DEV_STAT)

CAL_ERR = Calibration error (Decoded bit 7 of DEV_STAT)

RADIO_ERR = Radio communication error (Decoded bit 8 of DEV_STAT)

MEM_ERR = Heap memory error (Decoded bit 9 of DEV_STAT)

DFW_ERR = Device firmware error (Decoded bit 10 of DEV_STAT)

WT_ERR = Watchdog timer error (Decoded bit 11 of DEV_STAT)

DIAG = Diagnostics (ON when any of the above status pins are ON)

DEV_STAT = Device Status from the specified address of Device status register. This value is further decoded and individual status bits are displayed as remaining outputs of the block (ELEC_FAIL through DIAG).

Configurable parameters

Step 1: Select Load Wireless Data File. This is a file containing the transmitter's parameters and addresses. This file must first be created and exported from the Wireless Builder application. For details, see How to create an XYR6000 Transmitter export file.

Step 2: Add or remove the DEV-STAT and up to 4 PVs.

Parameter/ Button	Description
Filename	Path and name of the XYR6000's exported .csv file containing the device parameters to be accessed by this block.
Time Stamp	Time the .csv file was created.
Load Wireless Data File	Let's you select and load the .csv file containing the XYR6000 parameter addresses. This file must first be exported from Wireless Builder application.
Transmitter Reference Name	Name of the XYR6000 transmitter.

Parameter/ Button	Description
XYR Device	Name of the device whose parameters you will add or remove to the block.
Register	Type of register being accessed (Status or PV).
Address	Address of the parameter that was added. This field is blank if you remove the parameter.
Add	Click this to list the available parameters in the Wireless Data File loaded above. Highlight the desired parameter and click OK to add it.
Remove	Removes the parameter from the block.

How to create an XYR6000 Transmitter export file

A .csv file containing the transmitter's parameters and addresses is required for configuration of the 6XYRT function block. Following are the steps to create this .csv file in Wireless Builder.

1. Using Wireless Builder, complete the network configuration for all devices (transmitters) to be interfaced via the Wireless Gateway. Once a complete database has been created, click on the Gateway name in the Menu Tree of the software to access the MAIN dialog display for the gateway.

2. Click on the Modbus TCP Server tab to register the specific ControlEdge HC900 controller that will be permitted to access the Gateway's Modbus data. Verify the TCP Port number is 502. Enter the IP address of the ControlEdge HC900 controller's port that the dialog. The ControlEdge HC900 controller's IP address can be found using HC Designer software under the Utilities Tab.

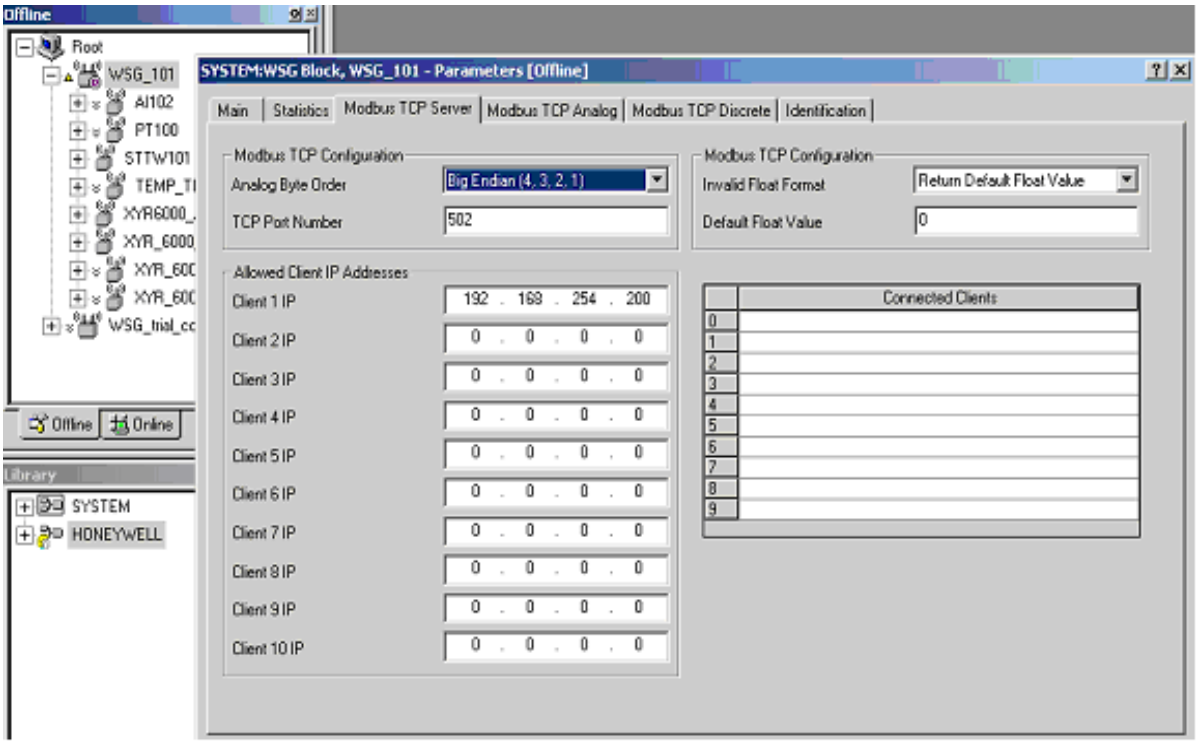

3. Click on the Modbus TCP Analog data tab to begin assigning Modbus addresses to transmitter data.

4. Scroll down to access the Input Register Entries field for Input Registers (Read FC4) table and specify the quantity of parameters to be read by the ControlEdge HC900 controller. In the figure below, a quantity of 14 has been entered (see circle), thus creating 14 entries with register numbers 0 to 27. (Parameters are floating point and occupy 2 registers each.) Note a minimum of two parameters will be needed for each transmitter, one for the process value and one for the transmitter status. If the specific transmitter has more than one process variable, addition parameter fields will be needed.

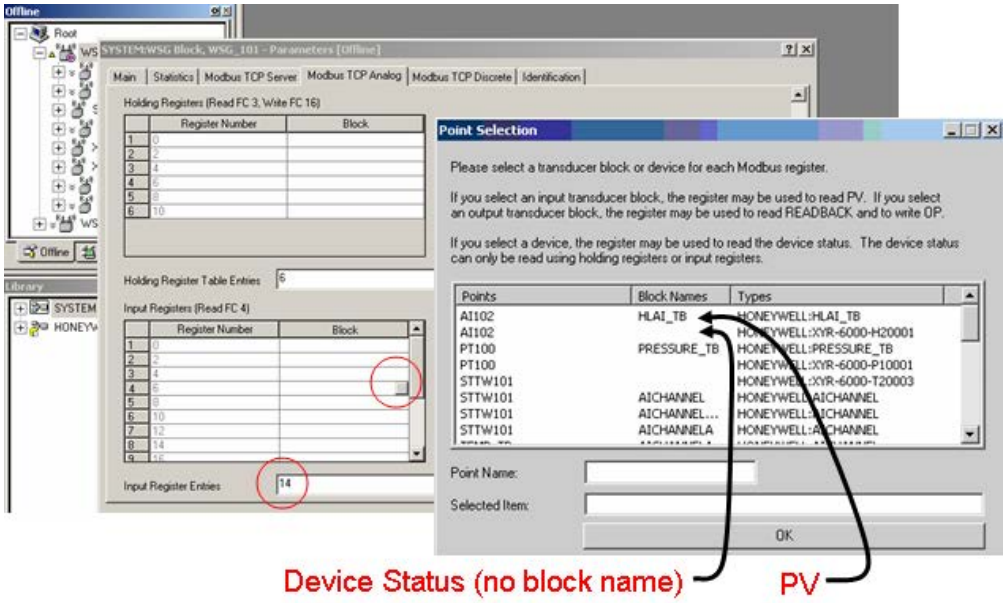

5. To add a transmitter parameter, click on a register under the Block column. Next, click on the gray block that appears at the right of the selected cell. (See circle in figure above.) This brings up a list of configured transmitters, each with a Device Status parameter and one to four PVs.

6. Select a parameter to add to the register. Device Status parameters are blank under the Block Names column; PV parameters have block names.

7. Repeat for each parameter you'd like to add.

8. Close the Main Gateway dialog.

9. Access the File menu of Wireless Builder and select Export Modbus Config. See figure below. Select conversion to Generic File Format. Assign a file name, select file type "Delimited Text (.csv)" and save the file. Export a database .csv file. This .csv file contains the transmitter's parameters and addresses and is required for configuration of the 6XYRT function block.

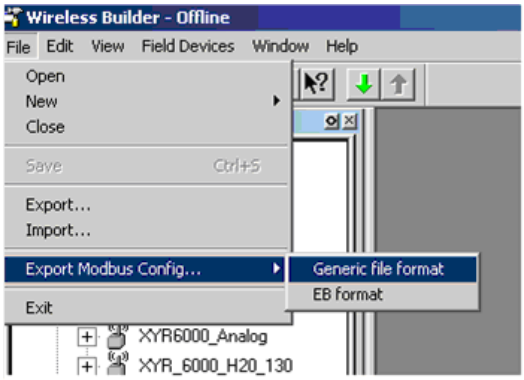

Example

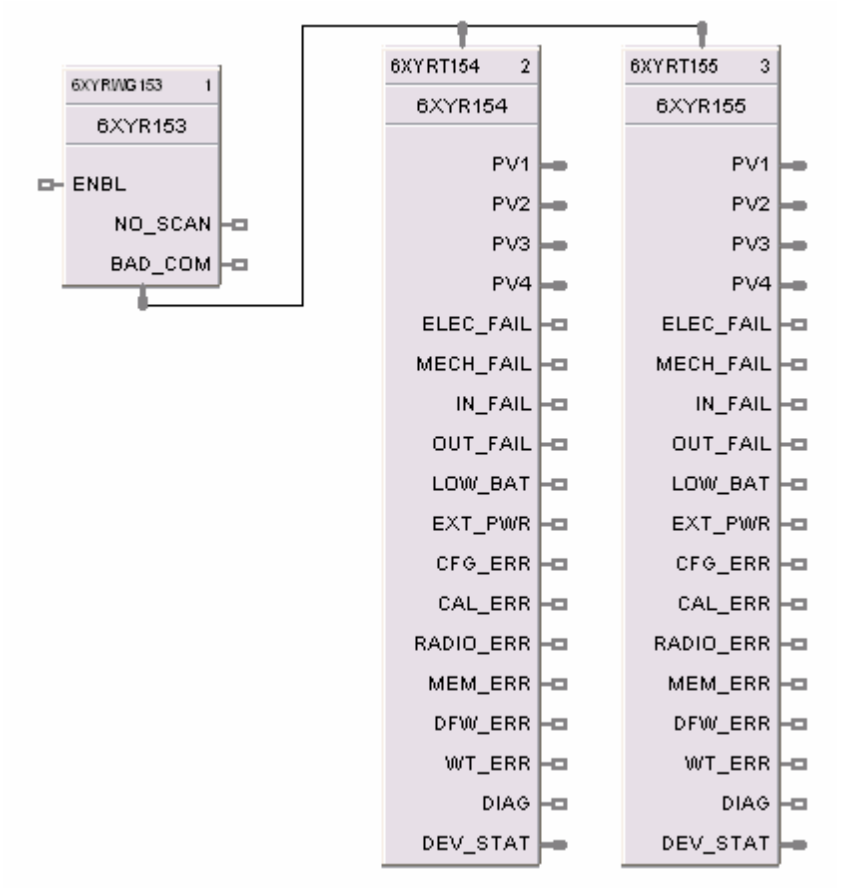

Figure 137 6XYRT function block example

6XYRWG

The 6XYRWG label stands for XYR6000 Wireless Gateway device status block.

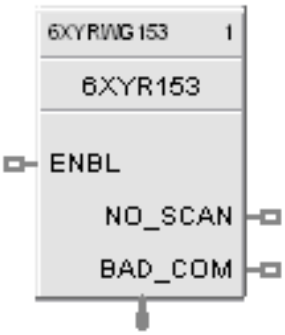

This block is a part of the *Communications* category.

Function

This block allows the ControlEdge HC900 controller to act as a modbus hostvc device and communicate with an XYR6000 wireless gateway via the Ethernet port of the controller. Configuration in ControlEdge HC900 master requires one block per gateway, up to 32 gateways or 1024 parameters maximum. Only one block may be assigned to each XYR6000 gateway device. Even if it does not read or write parameters, it provides a means of connecting XYR6000 wireless transmitter blocks to it by way of ADDR output pin. The block outputs provide digital indication of communication integrity.

For transmitter parameters that are readable, there is separate 6XYRT block which is connected to 6XYRWG via the ADDR output pin at the bottom of this block. If more parameters of any of the transmitters are to be read, then TCPR block can be used with 6XYRWG block similar to TCPS and TCPR combination. All outputs of the block can be connected or tagged in the same manner as any other function block output.

If XYR6000 gateway device does not respond to a request, the last output value will be maintained.

Input

ENBL = Enable. When the digital input pin is ON the 6XYRWG Device is in scan.

If the Enable pin is not connected, then the user must be in Monitor mode, Monitoring TCP Modbus Diagnostics in the HC Designer, select the 6XYRWG device to be enabled or disabled, and click the Enable (or Disable) button.

Output

NO_SCAN = Scan Indication. ON = Device is "Out of Scan". OFF = Device is "In Scan".

BAD_COM = Communications Indication. ON = Bad quality or device not defined. OFF = Good Communications.

ADDR = Used to connect 6XYRT transmitter function blocks to the 6XYRG gateway block.

Configurable Parameters

Properties Group	Parameter	Index #	Parameter Description	Value or Selection
Configure Modbus	**Device Tag Name**	0	Description of 6XYRWG device	16 character tag name (ASCII characters only). Device address and Tag Name must be unique within a control file.
	Modbus/TCP address	1	IP Address of XYR6000 Wireless gateway device on the link.	Enter unique address. (Cannot be 0.0.0.0 or 255.255.255.255) Default IP address = 0.0.0.0 which means 6XYRWG device will NOT be in scan.
Modbus Double Register Format	Each IEEE 32-bit floating point number requires two consecutive registers (four bytes) starting with the register defined as the starting register for the information. The stuffing order of the bytes into the two registers differs among Modbus hosts. The selections are: Selection / Description / Byte order FP B — Floating Point Big Endian Format (recommended format) — 4, 3, 2, 1 FP BB — Floating Point Big Endian with byte-swapped — 3, 4, 1, 2 FP L — Floating Point Little Endian Format — 1, 2, 3, 4 FP LB — Floating Point Little Endian with byte-swapped — 2, 1, 4, 3			

Example

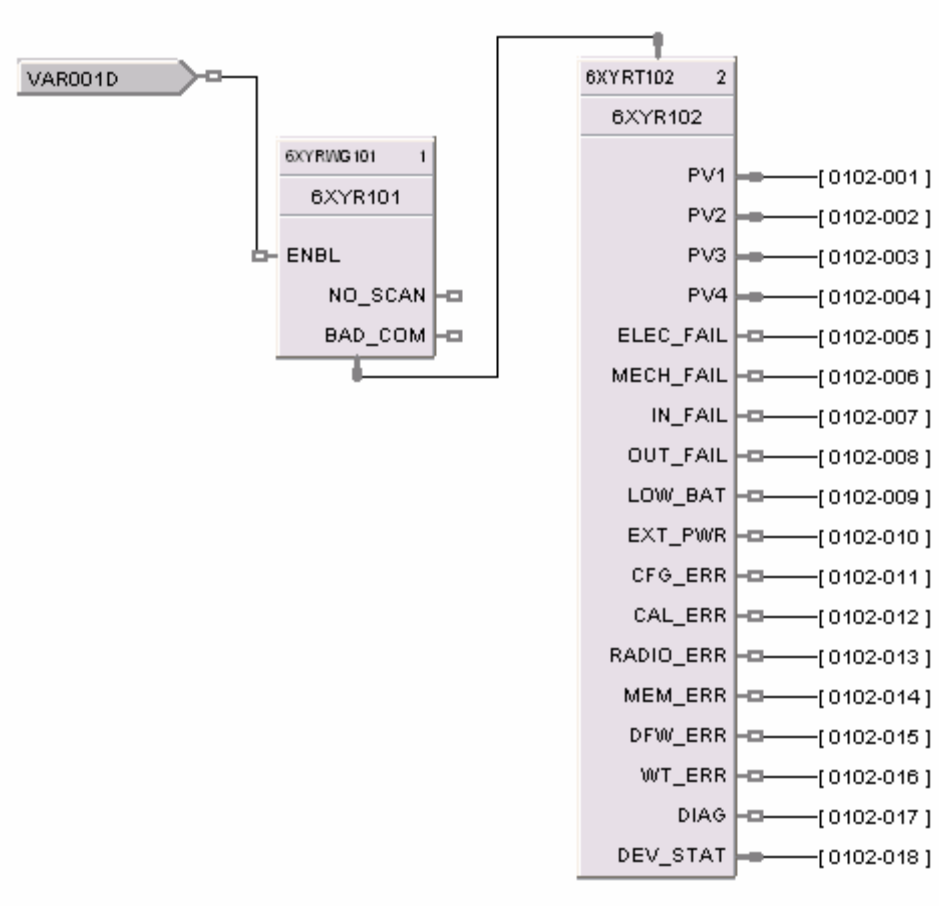

Figure 138 6XYRWG function block example

Sales and Service

For application assistance, current specifications, ordering, pricing, and name of the nearest Authorized Distributor, contact one of the offices below

ASIA PACIFIC

Honeywell Process Solutions,

Phone: + 800 12026455 or
+44 (0) 1202645583

(TAC) **hfs-tac-support@honeywell.com**

Australia
Honeywell Limited
Phone: +(61) 7-3846 1255
FAX: +(61) 7-3840 6481
Toll Free 1300-36-39-36
Toll Free Fax:
1300-36-04-70

China – PRC - Shanghai
Honeywell China Inc.
Phone: (86-21) 5257-4568
Fax: (86-21) 6237-2826

Singapore
Honeywell Pte Ltd.
Phone: +(65) 6580 3278
Fax: +(65) 6445-3033

South Korea
Honeywell Korea Co Ltd
Phone: +(822) 799 6114
Fax: +(822) 792 9015

EMEA

Honeywell Process Solutions,

Phone: + 800 12026455 or
+44 (0) 1202645583

Email: (Sales)

FP-Sales-Apps@Honeywell.com

or

(TAC)

hfs-tac-support@honeywell.com

AMERICAS

Honeywell Process Solutions,

Phone: (TAC) (800) 423-9883
or (215) 641-3610

(Sales) 1-800-343-0228

Email: (Sales)

FP-Sales-Apps@Honeywell.com

or

(TAC)

hfs-tac-support@honeywell.com

Specifications are subject to change without notice.

For more information
To learn more about ControlEdge HC900,
visit https://process.honeywell.com/
Or contact your Honeywell Account Manager

Process Solutions
Honeywell

1250 W Sam Houston Pkwy S
Houston, USA, TX 77042

Honeywell Control Systems Ltd
Honeywell House, Skimped Hill Lane
Bracknell, England, RG12 1EB

Shanghai City Centre, 100 Jungi Road
Shanghai, China 20061

51-52-25-109 Rev. 30
January 2022

©2022 Honeywell International Inc.

https://process.honeywell.com/