7.2.14 Edition 01.11

krom/schroder

D GB F NL I E DK S N P GR
TR CZ PL RUS H ➔ www.docuthek.com

Operating instructions
Burners for gas BIO, BIOA

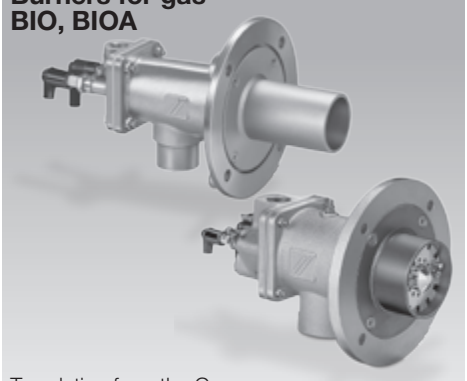

Translation from the German

© 2008–2011 Elster GmbH

Contents

Burners for gas BIO, BIOA 1
Contents 1
Safety. 1
Checking the usage 2
Installation 3
Installation in a burner quarl 3
Burner with attachment tube 3
Installation on the furnace 4
Air connection, gas connection 4
Installing the burner insert 5
Wiring 5
Preparing commissioning 6
Safety instructions 6
Determining the flow rates 6
Notes on the flow rate curve 7
Restrictors 8
Hot air compensation. 8
Setting the air pressure for low fire and high fire . 8
Preparing the gas pressure measurement for low fire and high fire 9
Commissioning. 10
Igniting and adjusting the burner 10
Tightness test. 11
Cooling air 12
Blocking and recording the settings 12
Maintenance 12
Assistance in the event of malfunction 14
Accessories 15
Technical data. 15
Certification 16
Contact 16

Safety

Please read and keep in a safe place

Please read through these instructions carefully before installing or operating. Following the installation, pass the instructions on to the operator. These instructions can also be found at www.docuthek.com.

Explanation of symbols

•, 1, 2, 3... = Action
▷ = Instruction

Liability

We will not be held liable for damages resulting from non-observance of the instructions and non-compliant use.

Safety instructions

Information that is relevant for safety is indicated in the instructions as follows:

⚠ DANGER
Indicates potentially fatal situations.

⚠ WARNING
Indicates possible danger to life and limb.

! CAUTION
Indicates possible material damage.

All interventions may only be carried out by qualified gas technicians. Electrical interventions may only be carried out by qualified electricians.

Conversion, spare parts

All technical changes are prohibited. Only use OEM spare parts.

Transport

On receipt of the product, check that the delivery is complete (see Part designations). Report any transport damage immediately.

Storage

Store the product in a dry place. Ambient temperature: see Technical data.

GB

Checking the usage

Burner for heating industrial thermoprocessing equipment. For installation in a burner quarl or for use with an extended, heat-resistant burner tube. For natural gas, town gas and LPG. Other types of gas on request.

This function is only guaranteed when used within the specified limits – see also page 15 (Technical data). Any other use is considered as non-compliant.

Construction stage, rated capacity Q_{max}, gas type and diameter of gas measuring orifice (as of construction stage E) – see type label.

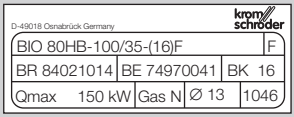

Type code

Code	Description
BIO	Burner for gas with cast steel housing
BIOA	Burner for gas with aluminium housing
50 – 140	Burner size
R	Normal flame
H	Long, soft flame
K	Flat flame
B	Natural gas
D	Town gas
G	Propane, propane/butane, butane
M	Propane, propane/butane, butane
L	Ignition lance
R	Reduced maximum connection rating
-X	Length of burner tube, X mm
/X	Position of burner head, X mm
-(X)	Burner head identifier
B – F	Construction stage
Z	Special version

Part designations

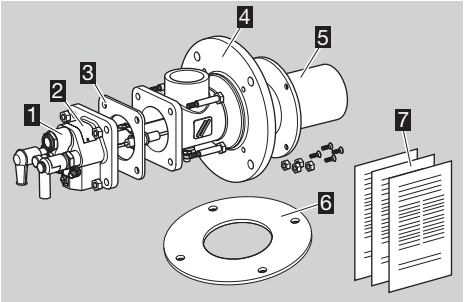

1 Burner insert
2 Type label
3 Gas housing gasket
4 Air housing
5 Burner tube
6 Mounting gasket
7 Enclosed documentation (flow rate curves, operating characteristic diagrams, dimension sheet, spare parts list, spare parts drawing and Declaration of Incorporation)

- Check letter marking and identification marks on the burner head using the information provided on the type label.

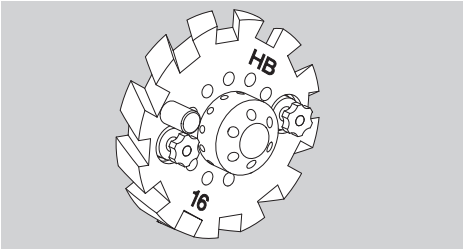

Installation

Installation in a burner quarl

Conical burner quarl

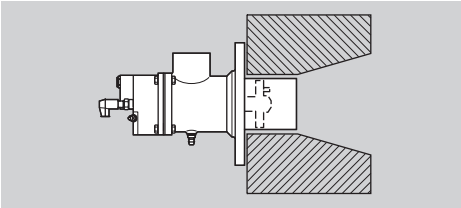

- ▷ For industrial furnaces and kilns and for burning in an open combustion chamber.
- ▷ Control: High/Low, continuous.
- ▷ Type of burner head: R.
- ▷ Max. capacity: 100%.
- ▷ We recommend the cold-air operating mode, otherwise the nitric oxide values will be too high.

Cylindrical burner quarl

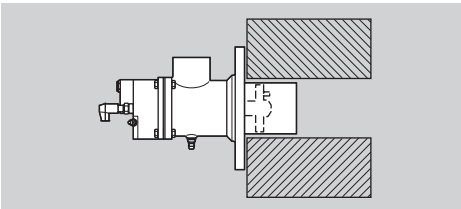

- ▷ For industrial furnaces and kilns and for burning in an open combustion chamber.
- ▷ Control: High/Low, High/Low/Off, continuous.
- ▷ Type of burner head: R, H.
- ▷ Max. capacity: 100%.
- ▷ Normal to medium flow velocity.

Tapered burner quarl

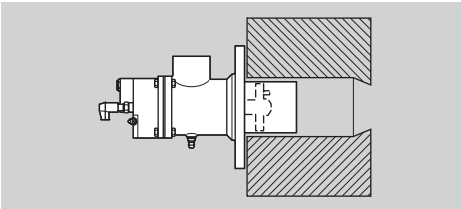

- ▷ For industrial furnaces and kilns and for burning in an open combustion chamber.
- ▷ Control: High/Low, High/Low/Off, continuous.
- ▷ Type of burner head: R, H.
- ▷ Max. capacity: approx. 80%, depending on outlet diameter of the burner quarl
- ▷ Medium to high flow velocity.

Flat flame burner quarl

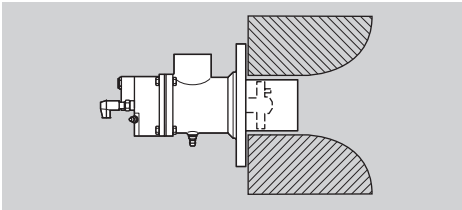

- ▷ For industrial furnaces and kilns and for burning in an open combustion chamber.
- ▷ Control: High/Low, High/Low/Off, continuous (limited control range).
- ▷ Type of burner head: K.
- ▷ Capacity range: 40–100%.

Burner with attachment tube

- ▷ Position of the burner head near the interior furnace wall (**L_2 = L_O** ± 50 mm).

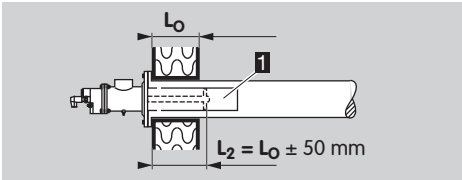

- ▷ Do not fit the attachment tube **1** directly in the furnace wall.
- ▷ Furnace temperature ≤ 600°C.

Radiant tube heating:

- ▷ Reduce the outlet diameter of the radiant tube using an orifice **2** to the point where a pressure loss of approx. 10 mbar occurs at the burner's rated capacity.

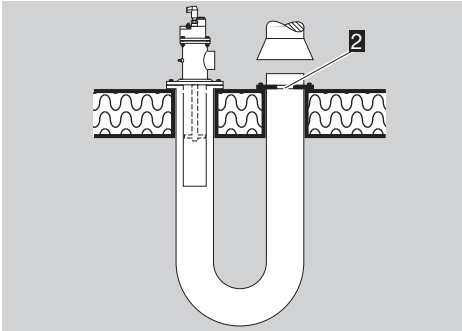

Hot-air generation:

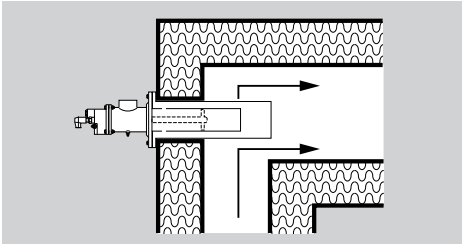

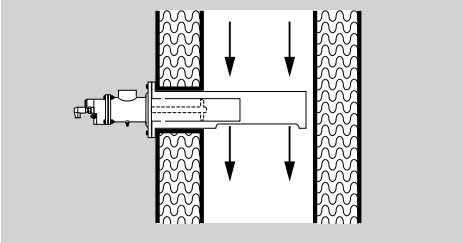

▷ At flow velocities of > 15 m/s, the protective flame tube FPT is used to protect the flame from being cooled.

GB

Installation on the furnace

▷ When installing always ensure that when the burner is mounted it is sealed tightly on the furnace wall.

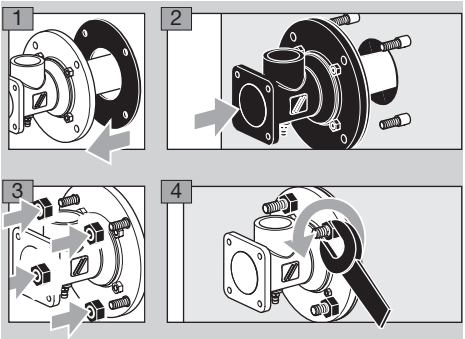

Air connection, gas connection

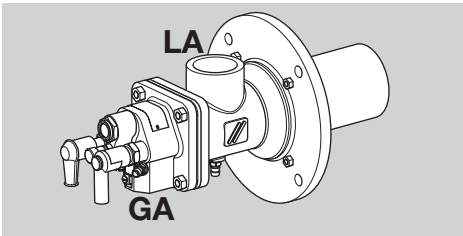

Type	Gas connection **GA**	Air connection **LA***
BIO 50	Rp ½	Rp 1½
BIOA 65	Rp ½	∅ 48 mm
BIO 65	Rp ¾	Rp 1½
BIO 80	Rp ¾	Rp 2
BIO 100	Rp 1	Rp 2
BIO 125	Rp 1½	DN 65
BIO 140	Rp 1½	DN 80

* Up to burner size 100, threaded connection; as from burner size 125, flanged connection; BIOA 65, tube connection.

▷ Threaded connection to DIN 2999, flange dimensions to DIN 2633, PN 16.

▷ Install flexible tubes or bellows units to prevent mechanical stress or transmission of vibration.

▷ Ensure that the seals are undamaged.

⚠ DANGER

Risk of explosion! Ensure the connection is gas-tight.

▷ On delivery, the threaded gas connection is situated opposite of the air connection; it can be rotated in increments of 90°.

For connecting to ANSI/NPT connections:

▷ An adapter set is required for connection to ANSI/NPT, see page 15 (Accessories).

Type	Gas connection **GA**	Air connection **LA**
BIO 50	½ – 14 NPT	1½ – 11.5 NPT
BIOA 65	½ – 14 NPT	∅ 1.89"
BIO 65	¾ – 14 NPT	1½ – 11.5 NPT
BIO 80	¾ – 14 NPT	2 – 11.5 NPT
BIO 100	1 – 11.5 NPT	2 – 11.5 NPT
BIO 125	1½ – 11.5 NPT	∅ 2.94"
BIO 140	1½ – 11.5 NPT	∅ 3.57"

▷ **BIO 50 to BIO 100:** Use NPT adapter **J** for air connection **LA** and NPT thread adapter **H** for gas connection **GA**.

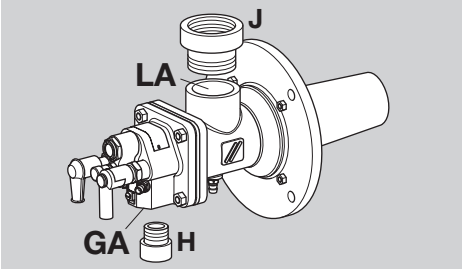

▷ **BIO 125, BIO 140:** Weld flange **K** to air pipe **P** for air connection **LA** and use NPT thread adapter **H** for gas connection **GA**.

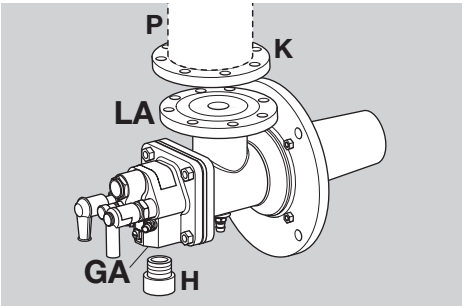

Ignition lance connections on the BIO..L:

▷ Air connection **la**: Rp 3/8".

▷ Gas connection **ga** (as from burner size 65): Rp 1/4".

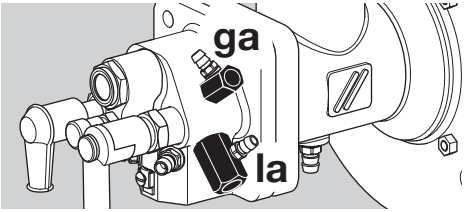

▷ Ignition lance output: 1.5 kW.

Installing the burner insert

▷ The burner insert can be rotated to the required position in increments of 90°.

▷ Insert the gas housing gasket between the burner insert and the air housing.

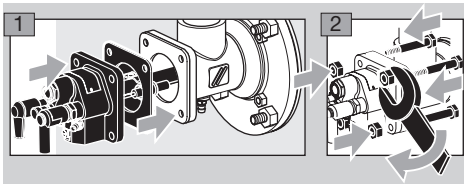

▷ Tighten burner insert: for BIO(A) 50–100 with max. 15 Nm (11 lb ft), for BIO 125–140 with max. 30 Nm (22 lb ft).

Wiring

⚠ DANGER

Electric shocks can be fatal! Before working on possible live components ensure the unit is disconnected from the power supply.

▷ For the ignition and ionization cables, use (unscreened) high-voltage cable:
FZLSi 1/6 up to 180°C (356°F),
Order No. 04250410, or
FZLK 1/7 up to 80°C (176°F),
Order No. 04250409.

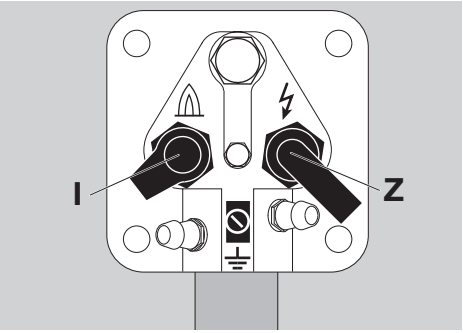

Ionization electrode I

▷ Install the ionization cable well away from mains cables and interference from electro-magnetic sources and avoid external electrical interference. Max. length of ionization cable – see automatic burner control unit operating instructions.

▷ Connect the ionization electrode to the automatic burner control unit via the ionization cable.

Ignition electrode Z

▷ Length of ignition cable: max. 5 m (15 ft), recommended < 1 m (40").

▷ For permanent ignition, max. ignition cable length 1 m (40").

▷ Lay the ignition cable individually and not in a metal conduit.

▷ Install the ignition cable separately from ionization and UV cables.

▷ A ≥ 7.5 kV, ≥ 12 mA ignition transformer is recommended; 5 kV for ignition lance.

Ionization and ignition electrodes

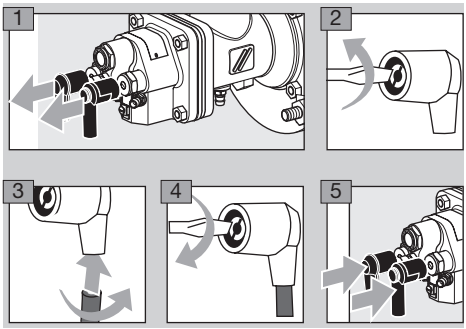

6 Connect the PE wire for burner ground to the burner insert. In the case of single-electrode operation, route the PE wire from the burner insert directly to the terminal on the automatic burner control unit.

⚠ WARNING

High-voltage risk! It is essential that a high-voltage warning label is attached to the ignition cable.

7 For more detailed information on how to wire the ionization and ignition cables, refer to the operating instructions and connection diagrams of the automatic burner control unit and ignition transformer.

Preparing commissioning

Safety instructions

- ▷ Arrange the adjustment and commissioning of the burner with the system operator or manufacturer.
- ▷ Check the entire system, upstream devices and electrical connections.
- ▷ Note the operating instructions for individual controls.

⚠ DANGER

The burner must only be commissioned by authorized trained personnel.
Risk of explosion! Please observe the appropriate precautions when igniting the burner.
Risk of poisoning! Open the gas and air supply so that the burner is always operated with excess air – otherwise CO will form in the furnace chamber. CO is odourless and poisonous! Conduct a flue gas analysis.

- ▷ Pre-purge the furnace chamber with air (5 x furnace chamber volume) before every ignition attempt.
- ▷ If the burner does not ignite although the automatic burner control unit has been switched on and off several times: check the entire system.
- ▷ After ignition, monitor the flame and the gas- and air-side pressure display on the burner. Measure the ionization current. Switch-off threshold – see automatic burner control unit operating instructions.

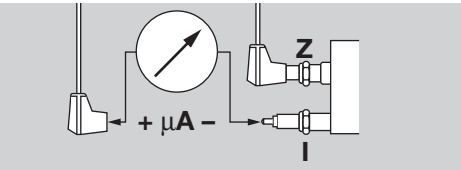

- ▷ The burner must only be ignited at low fire (between 10 and 40% of the rated capacity Q_{max}) – see type label.

⚠ DANGER

Risk of explosion! Fill the gas line to the burner carefully and correctly with gas and vent it safely into the open air – do not discharge the test volume into the furnace chamber.

Determining the flow rates

$$\dot{V}_{Gas} = P_B/H_u$$

$$\dot{V}_{Luft} = \dot{V}_{Gas} \cdot \lambda \cdot L_{min}$$

- ▷ $\dot{V}_{Gas}$: Gas flow rate in m^3/h (ft^3/h)
- ▷ P_B: Burner output in kW (BTU/h)
- ▷ H_u: Gas calorific value in kWh/m^3 (BTU/ft^3)
- ▷ $\dot{V}_{Luft}$: Air flow rate in m^3/h (ft^3/h)
- ▷ λ: Lambda, air index
- ▷ L_{min}: Minimum air requirement in m^3/m^3 (ft^3/ft^3)
- • Use the lower calorific value H_u.
- ▷ Information on the gas quality supplied can be obtained from the competent gas supply company.

Common gas qualities

Gas type	H_u kWh/m^3 (BTU/ft^3)	L_{min} m^3/m^3 (ft^3/ft^3)
Natural gas H	11 (1063)	10.6 (374)
Natural gas L	8.9 (860)	8.6 (304)
Propane	25.9 (2503)	24.4 (862)
Town gas	4.09 (395)	3.67 (130)
Butane	34.4 (3325)	32.3 (1141)

- ▷ For safety reasons, a minimum air excess of 5% (lambda = 1.05) should be ensured.

Notes on the flow rate curve

▷ If the gas density in the operating state differs from that reflected in the flow rate curve, convert the pressures according to the local operating state.

$$p_B = p_M \cdot \frac{\delta_B}{\delta_M}$$

▷ δ_M: Gas density reflected in the flow rate curve [kg/m³ (lb/ft³)]

▷ δ_B: Gas density in operating state [kg/m³ (lb/ft³)]

▷ p_M: Gas pressure reflected in the flow rate curve

▷ p_B: Gas pressure in operating state

Burners without gas measuring orifice:

• Read off the gas pressure p_{gas} and air pressure p_{air} from the enclosed flow rate curve for cold air on the basis of the calculated flow rates.

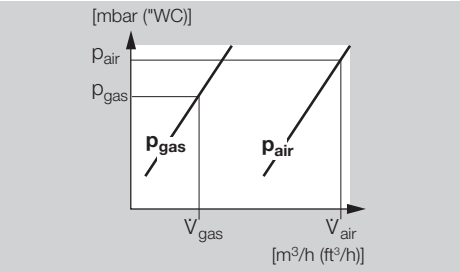

▷ Note possible capacity reductions due to positive or negative pressures in the furnace/combustion chamber. Add positive pressures or subtract negative pressures.

Burners with gas measuring orifice:

• Read off the differential pressure Δp_{gas} and air pressure p_{air} fom the flow rate curve for cold air on the basis of the calculated flow rates.

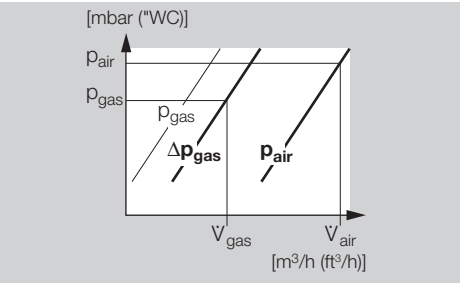

▷ Note possible capacity reductions (air) due to pressure loss in the furnace/combustion chamber. Add positive pressures or subtract negative pressures.

▷ The differential gas pressure Δp_{gas} measured on the integrated gas measuring orifice is independent of the furnace chamber pressure.

! CAUTION

If reducing fittings or manual valves with internal thread are installed, Δp_{gas} on the integrated gas measuring orifice is reduced.

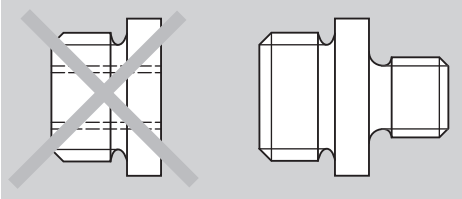

▷ Reducing fitting with internal and external thread: Deviation from the flow rate curves may occur when the cross-section of the reducing fitting differs from that of the threaded gas connection **GA** or when a manual valve is screwed directly into the burner.

▷ Reducing nipple with external thread at both ends: No deviations from the flow rate curves occur.

▷ Ensure an undisturbed flow to the measuring orifice!

▷ As not all the effects caused by the equipment are known, setting the burner using the pressure values is only approximate. It is possible to set the burner precisely by measuring the flow rates or flue gas.

Restrictors

▷ The air volume required for the low-fire rate at a given air pressure is determined by the ignition position of a butterfly valve, a bypass hole in the air valve or an external bypass with restrictor.

▷ Burners as from construction stage E (see type label) are equipped with gas flow adjustment to replace the restrictor in the gas pipe.

Hot air compensation

▷ The combustion air pressure must be increased in hot-air operating mode (lambda = constant).

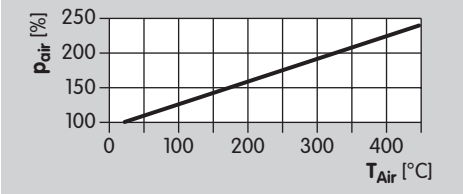

▷ The gas pressure is increased by 5 – 10 mbar.

▷ The total burner capacity P_B rises as the air temperature T_{Air} increases.

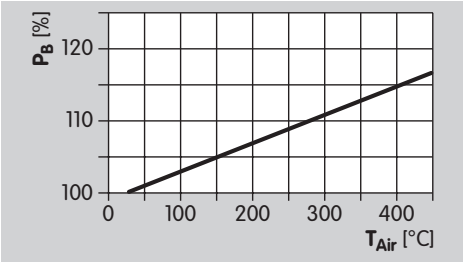

Setting the air pressure for low fire and high fire

1 Shut off the gas and air supply.

BIO:

▷ Air measuring nipple **L**, external dia. = 9 mm (0.35").

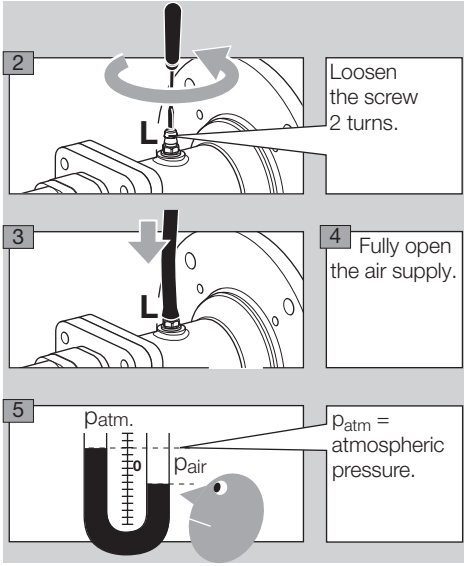

BIOA:

▷ Air measuring nipple **L**, external dia. = 9 mm (0.35").

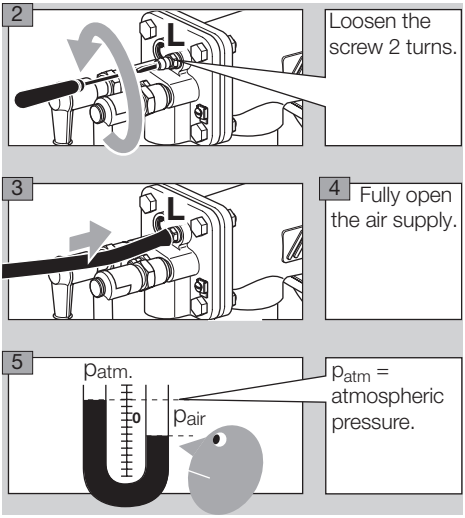

Low fire:

▷ The burner must only be ignited at low fire (between 10 and 40% of the rated capacity Q_{max} – see type label.

● Reduce the air supply on the air control valve and set the desired low-fire rate, e.g. using a limit switch or mechanical stop.

▷ On air control valves with bypass, the bypass orifice should be determined on the basis of the

required flow rate and the existing supply pressure if required.

High fire:

- Set the required air pressure p_{air} on the air restrictor upstream of the burner.
- When using air restricting orifices: check the air pressure p_{air}.

Preparing the gas pressure measurement for low fire and high fire

- Connect all measuring devices for subsequent fine adjustment of the burner.
- ▷ Leave the gas supply closed.
- ▷ Gas measuring nipple **G**, external dia. = 9 mm (0.35").

Burners without gas measuring orifice:

- Read off the gas pressure p_{gas} for the required flow rate from the enclosed flow rate curve for cold air.

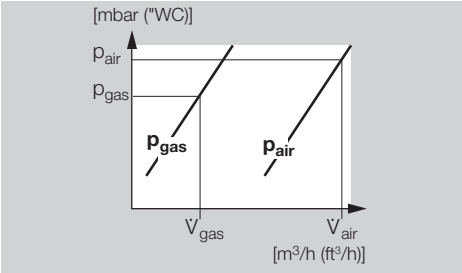

BIO..50:

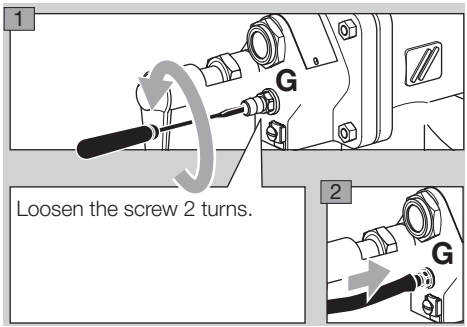

BIOA:

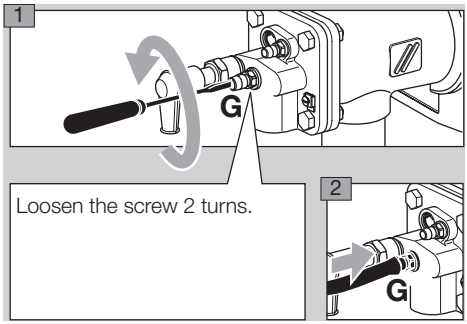

Burners with gas measuring orifice:

- Read off the differential pressure for the required gas flow rate from the enclosed flow rate curve for cold air.

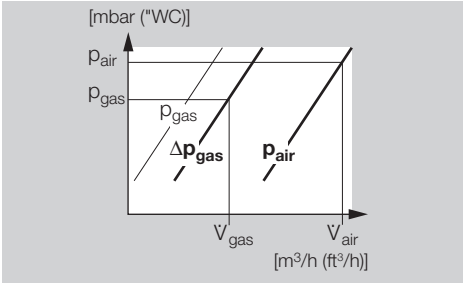

- **p1**: gas pressure upstream of the measuring orifice, **p2**: gas pressure downstream of the measuring orifice. Measuring range: select approx. 15 mbar.

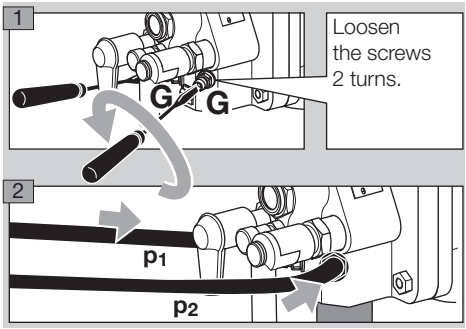

Integrated ignition lance on the BIO..L:

- ▷ Air pressure test nipple **l**, external dia. = 9 mm (0.35").
- ▷ Gas pressure test nipple **g**, external dia. = 9 mm (0.35").

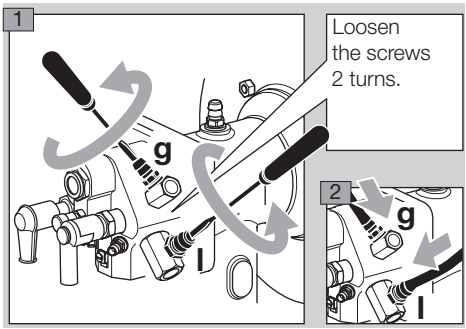

- ▷ Ignition lance:
  p_{gas} = 30 – 50 mbar,
  p_{air} = 30 – 50 mbar.
- ▷ Check flame stability and ionization current.
- ▷ The gas and air pressure of the ignition lance must be higher than the gas and air pressure of the main burner.

GB

Commissioning

Igniting and adjusting the burner

⚠ WARNING

Ensure adequate ventilation of the furnace chamber before each burner start!

▷ The burner housing will become hot during operation with preheated combustion air. Provide protection against accidental contact as required.

• All valves of the installation must be checked for tightness before ignition.

GB

Setting the low-fire rate:

• Set the valves to ignition position.

• Limit the maximum gas volume.

▷ Should an adjustable gas restrictor be installed upstream of the burner, open the restrictor by approx. a quarter.

▷ **For burners with a gas measuring orifice**, close the flow rate restrictor with approx. 10 turns:

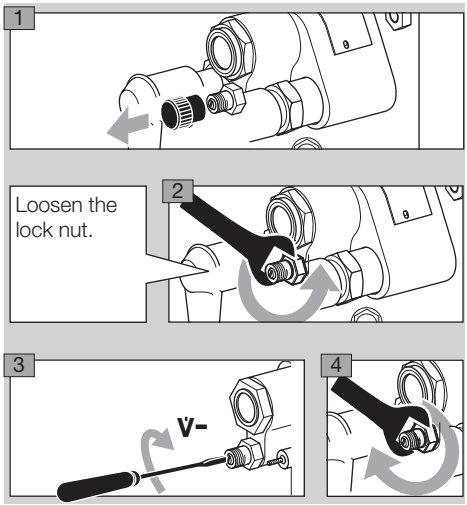

• Open the gas supply.

• Ignite the burner.

▷ The safety time of the automatic burner control unit starts to elapse.

• If no flame forms, check and adjust the gas and air pressures of the start gas adjustment.

• In the case of operation with bypass (e.g. when using an air/gas ratio control): check the bypass nozzle and adjust if required.

• In the case of operation without bypass (e.g. when using an air/gas ratio control without bypass): increase the low-fire rate setting.

• Check the basic setting or bypass of the air control valve.

• Check the position of the restrictor in the air line.

• Check the fan.

• Reset the automatic burner control unit and re-ignite the burner.

▷ The burner ignites and proceeds to normal operation.

• Check flame stability and ionization current at low fire. Switch-off threshold – see automatic burner control unit operating instructions.

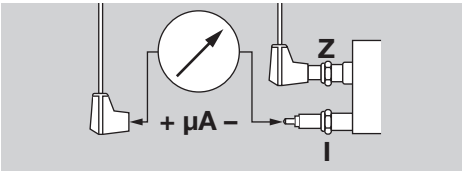

• Monitor flame formation.

• Adjust the low-fire rate settings if required.

• If no flame forms – see page 14 (Assistance in the event of malfunction).

Setting the high-fire rate:

• Set the air and gas circuit of the burner to high fire while continuously monitoring the flame.

▷ Avoid CO formation – always operate the burner with excess air when starting up!

▷ **Burners without gas measuring orifice:** When the desired maximum valve positions are reached, set the gas pressure p_{gas} using the restrictor upstream of the burner.

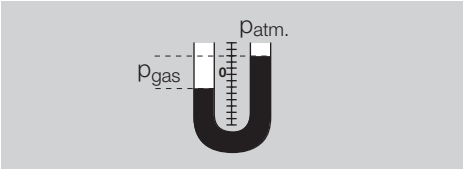

▷ **Burners with gas measuring orifice:** Set the differential pressure Δp_{gas} using the gas restrictor or via the integrated flow adjustment.

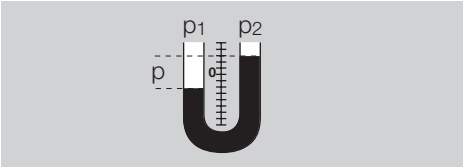

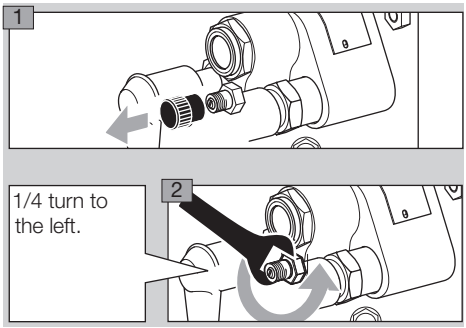

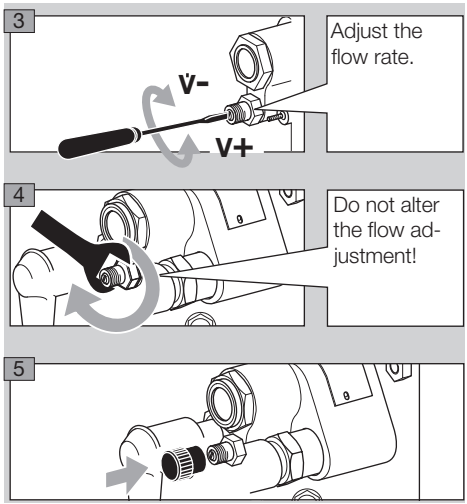

▷ On delivery, the flow rate restrictor is 100% open.

Re-adjusting the air flow rate:

- Check the air pressure p_{air} on the burner and adjust using the air restrictor if required.
- When using air restricting orifices: check the air pressure p_{air} and rework the orifice if required.

⚠ DANGER

Risk of explosion and poisoning during burner adjustment with an air deficiency! Adjust the gas and air supply so that the burner is always operated with excess air – otherwise CO will form in the furnace chamber. CO is odourless and poisonous! Conduct a flue gas analysis.

- Measure the gas and air flow rates if possible. Determine the lambda value and re-adjust the settings if required.

Tightness test

⚠ DANGER

To ensure that there is no danger resulting from a leak, check the gas connections on the burner for leaks immediately after the burner has been put into operation.

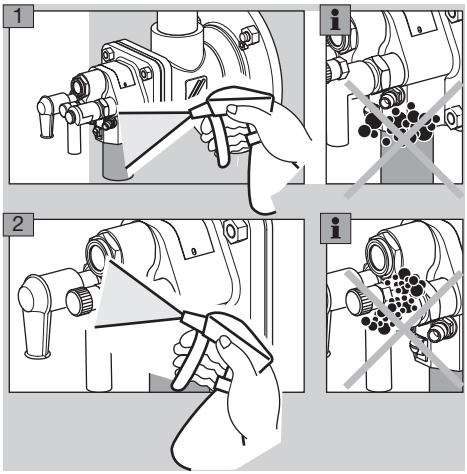

▷ Avoid condensation due to the furnace atmosphere entering the burner housing. While the burner is switched off, at furnace temperatures above 500°C (932°F), it must be cooled with a low air volume – see page 12 (Cooling air).

GB

Cooling air

▷ While the burner is switched off and depending on the furnace temperature, there must be a certain air flow for cooling the burner components.

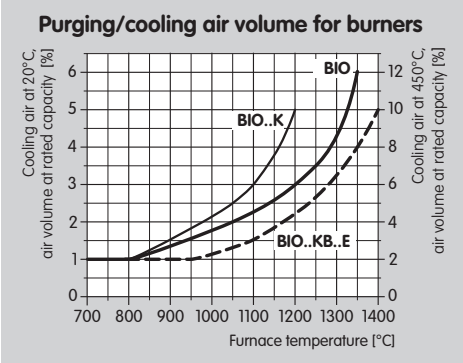

▷ Diagram: The relative air volume in percentage values, based on the air volume for the rated capacity of the relevant size, is given in the diagram. For hot air (450°C), the values on the right-hand axis are based on the standard air volume for the relevant rated capacity.

▷ Leave the air fan switched on until the furnace has cooled down completely.

Blocking and recording the settings

1 Produce a measurement report.
2 Set the burner to low fire and check the settings.
3 Set the burner to low and high fire several times while monitoring the pressure settings, flue gas values and flame patterns.
4 Remove the measuring devices and close off the test nipples – tighten the grub screws.
5 Block and seal the adjusting elements.
6 Induce a flame failure, e.g. by pulling the cap off the ionization electrode. The flame detector must close the gas safety valve and signal a fault.
7 Switch the system on and off several times while monitoring the automatic burner control unit.
8 Produce an acceptance report.

⚠ DANGER

An incorrect change of the burner settings may change the gas/air ratio and lead to unsafe operating conditions. Risk of explosion in case of CO being formed in the furnace chamber! CO is odourless and poisonous!

Maintenance

We recommend that a function check is carried out every six months.

⚠ WARNING

Risk of burning! Outflowing flue gases and burner components are hot.

1 Check the ionization and ignition cables.
2 Measure the ionization current.
▷ The ionization current must be at least 5 µA and must not vary.

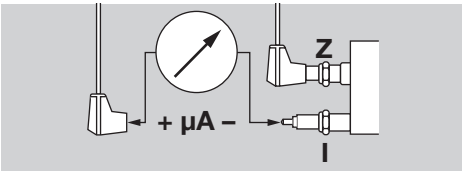

3 Disconnect the system from the electrical power supply.
4 Shut off the gas and air supply – do not change the restrictor settings.

Checking the ignition and ionization electrodes

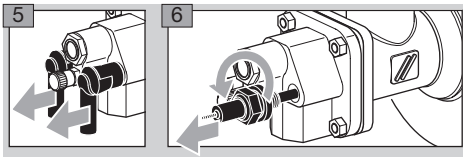

▷ Ensure that the electrode length does not change.
7 Remove dirt from electrodes or insulators.

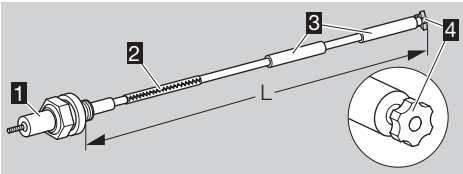

8 If the star **4** or insulator **3** is damaged, replace the electrode.
▷ Before changing the electrode, measure the total length **L**.
9 Connect the new electrode with the spark plug **1** using the dowel pin **2**.
10 Adjust spark plug and electrode to the measured total length **L**.

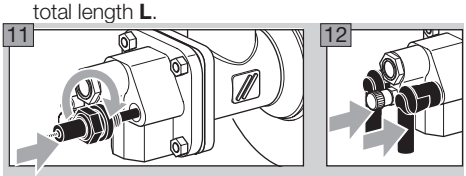

▷ Turning the spark plug makes it easier to feed the electrode into the burner insert.

Checking the burner

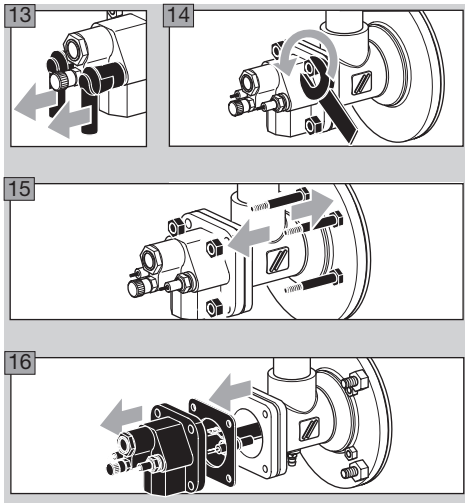

▷ If the burner insert is dismantled, the gas housing gasket will have to be renewed.

17 Place the burner insert in a safe place.

▷ Depending on the amount of dirt or wear: replace the ignition/ionization electrode rod and dowel pin during servicing – see page 12 (Checking the ignition and ionization electrodes).

18 Check burner head for dirt and thermal cracks.

⚠ WARNING

Risk of injury! Burner heads have sharp edges.

▷ When replacing any burner components: apply ceramic paste to the screw connections in order to avoid cold-setting – see page 15 (Accessories).

19 Check the electrode positions.

▷ The insulator must be flush with the front edge of the burner air disc.

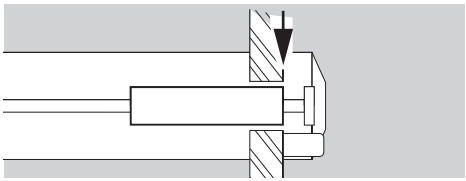

▷ Distance of ignition electrode from ground pin or gas nozzle: 2 ± 0.5 mm (0.08 ± 0.02").

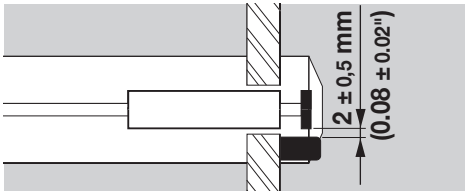

20 When the furnace chamber has cooled down, check the burner tube and burner quarl through the furnace flange.

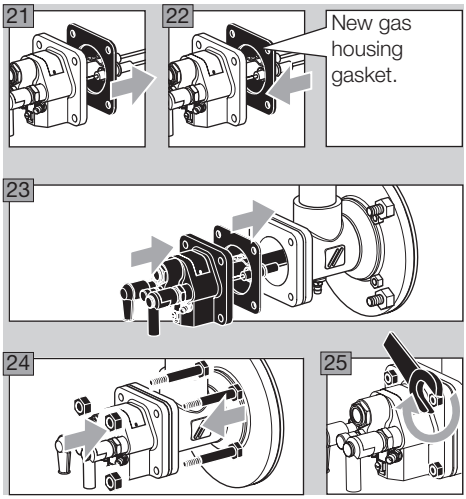

▷ Tighten burner insert: BIO(A) 50 to 100 with max. 15 Nm (11 lb ft), BIO 125 to 140 with max. 30 Nm (22 lb ft).

26 Connect the system to the electrical power supply.

27 Open the gas and air supply.

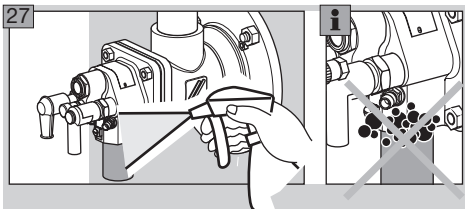

29 Set the burner to low fire and compare the pressure settings to those stated in the acceptance report.

30 Set the burner to low and high fire several times while monitoring the pressure settings, flue gas values and flame patterns.

⚠ DANGER

Risk of explosion and poisoning during burner adjustment with an air deficiency! Adjust the gas and air supply so that the burner is always operated with excess air – otherwise CO will form in the furnace chamber. CO is odourless and poisonous! Conduct a flue gas analysis.

31 Produce a servicing report.

Assistance in the event of malfunction

⚠ DANGER

Electric shocks can be fatal! Before working on possible live components ensure the unit is disconnected from the power supply.
Risk of injury! Burner heads have sharp edges.
Fault-clearance must only be undertaken by authorized, trained personnel.

GB

▷ If no fault is detected when checking the burner, proceed to the automatic burner control unit and check for faults in accordance with the relevant operating instructions.

? Faults
! Cause
• Remedy

? Burner does not function?
! Valves do not open.
• Check the voltage supply and wiring.

! Tightness control signals a fault.
• Check the valves for tightness.
• Note the tightness control operating instructions.

! Control valves do not move to low-fire position.
• Check the impulse lines.

! Gas inlet pressure is too low.
• Check the filter for dirt.

! Gas and air pressures on the burner are too low.
• Check the restrictors.

! Automatic burner control unit signals a fault.
• Check the ionization cables and ionization current.
• Check whether the burner is adequately grounded.
• Note the automatic burner control unit operating instructions.

? Burner performs a fault lock-out after burning faultlessly in normal operation?
! Incorrect gas and air flow rate settings.
• Check the gas and air pressures.

! No ignition spark is created.
• Check the ignition cable.
• Check the voltage supply and wiring.
• Check whether the burner is adequately grounded.
• Check the electrodes – see page 12 (Checking the ignition and ionization electrodes).

! Automatic burner control unit signals a fault.
• Check the ionization cable.

• Measure the ionization current by connecting a micro-ammeter into the ionization cable: min. 5 µA ionization current – stable signal.

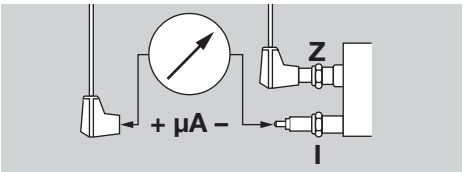

! Burner head dirty.
• Clean gas and air bore holes and air slots.
• Remove deposits on the burner head.

⚠ WARNING

Risk of injury! Burner heads have sharp edges.

! Excessive pressure fluctuations in the furnace chamber.
• Ask Elster Kromschröder for control concepts.

Accessories

Ceramic paste

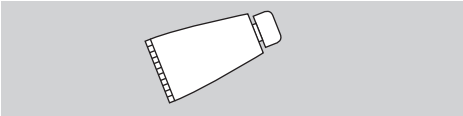

Apply ceramic paste to the relevant screw connections after replacing any burner components in order to avoid cold-setting.
Order number: 050120009.

Adapter set

For connecting BIO, BIOA to NPT/ANSI connections.

▷ BIOA: An NPT thread adapter (Order No. 75456281) is required for connection to the gas circuit only.

Burner	Adapter set	Order No.
BIO 50	BR 50 NPT	74922630
BIO 65	BR 65 NPT	74922631
BIOA 65	–	75456281
BIO 80	BR 80 NPT	74922632
BIO 100	BR 100 NPT	74922633
BIO 125	BR 125 NPT	74922634
BIO 140	BR 140 NPT	74922635

* Flange hole diameter.

Nozzle set

▷ For integrated ignition lances on request.

Technical data

Gas supply pressure: approx. 20 to 50 mbar,
air supply pressure: approx. 25 to 40 mbar,
each depending on flame shape, gas type and air temperature (gas and air pressures – see operating characteristic diagrams at www.docuthek.com).
Burner length increments: 100 mm.
Gas types: natural gas, LPG (gaseous) and coke oven gas; other gases on request.
Heating: direct using a burner quarl or an attachment tube, indirect using a burner attachment tube inside the radiant tube.
Control type:
staged: On/Off, High/Low/Off,
continuous: constant λ value.
Most of the burner components are made of corrosion-resistant stainless steel.
Housing:
BIO: cast steel,
BIOA: AlSi,
ZIO: ST.
Flame control: with ionization electrode (UV sensor as an option).
Ignition: direct, electrical; ignition lance as an option.
Maximum furnace temperature:
BIO/ZIO in burner quarl: up to 1450°C (higher temperatures on request),
BIO/ZIO with burner attachment tube: up to 600°C.
Maximum air temperature:
BIO, ZIO: 450°C,
BIOA: 200°C.
Storage: Store in a dry place.

Burner	Weight* [kg]
BIO 50	5.4
BIO 65	7.2
BIOA 65	3.6
BIO 80	11.2
BIO 100	12.6
BIO 125	21.7
BIO 140	29

* Shortest overall length.

Certification

Approval for Russia

Certified by Gosstandart pursuant to GOST-R.
Approved by Rostekhnadzor (RTN).

GB

Contact

If you have any technical questions, please contact your local branch office/agent. The addresses are available on the Internet or from Elster GmbH.

We reserve the right to make technical modifications in the interests of progress.

elster
Kromschröder

Elster GmbH
Postfach 28 09, D-49018 Osnabrück
Strotheweg 1, D-49504 Lotte (Büren)
T +49 541 1214-0
F +49 541 1214-370
info@kromschroeder.com, www.kromschroeder.com