Notice to Plant Operators

The use of non-Original Equipment Manufacturer parts (such as glass, gaskets, probes, modules, etc.) will void the Agency Approval (FM, UL, CSA, CRN, ABS, etc.), pressure/temperature rating, and warranty of this equipment. Clark-Reliance requires the use of OEM parts for all repairs on this product in order to maintain plant and personnel safety, and reliable operation.

"PARTS-PLUS"

Critical spare parts for overnight delivery, direct from the manufacturer.

clark-reliance.com/parts

These instructions for storage, installation, operation, maintenance and service of Jacoby-Tarbox sight flow indicators and sight windows are adequate to ensure long, satisfactory service.

CONTENTS

I.	INTRODUCTION	2
II.	STORAGE AND HANDLING	2
III.	INSTALLATION	2
IV.	START-UP	2, 3
V.	ROUTINE MAINTENANCE	3
	VI. SERVICE INSTRUCTIONS	3
VII	Disassembly	3, 4
	l.) Cylindrical Glass Units	3
	2.) Flat Glass Units	3, 4
VIII.	INSPECTION	4
IX.	REASSEMBLY	4, 5
	l) General Instructions	4, 5
	2) Instructions For Specific Units	5, 6
X.	TORQUE NOTES	6
	Tables	
1	Torque Values - Cylindrical Glass Sight Flow Indicators	1
2	Torque Values - Flat Glass Sight Flow Indicators	2
3	Torque Values - Flat Glass Sight Flow Indicators (Continued)	3
4	Torque Values - Flat Glass Sight Flow Indicators (Full ASME)	4
5	Torque Values - Tubular Glass Sight Flow Indicators w/ Stuffing Box Seals	5
6	Torque Values - Sight Windows	6
	Figures	
1	Fastener Torque Sequence	1
2	End Seals, Flat Glass Seals	2
2	Stuffing Box Type Seals	3, 6, 7
4	Glass Holder Assembly	4
5	Dual Window Assembly	5

JACOBY·TARBOX®
A Division Of The Clark • Reliance Corporation
16633 Foltz Parkway ● Strongsville, OH 44149 USA
Phone +1 440-572-1500 ● Fax +1 440-238-8828 ● www.clark-reliance.com

ISO 9001 REGISTERED CLARK • RELIANCE

I. Introduction

Sight flow indicators and sight windows can provide years of reliable service if: (1) properly specified for the application service (2) installed to avoid large and rapid thermal changes or external blows, and (3) installed and maintained to standards of good workmanship.

Glass is the critical component of the assembly. Glass is a brittle material with no yield point. When forces are imposed to create stress levels that glass cannot resist, it fails. Lacking the ability to flow or deform, glass under load is extremely sensitive to stress concentrations. Surface imperfections and the manner in which the glass is loaded are critical. These are easily controlled in the manufacture and assembly of the unit. The critical points in the life of these process indicators are during use and maintenance. Adherence to this manual, will enable the user to maintain properly selected sight glasses for long and reliable service.

II. Storage and Handling

Inspect all items for damage upon receipt as it may be necessary to submit a claim to the carrier. Units should be securely stored where they will be protected from the elements and corrosive fumes, where they can neither fall, nor be struck by other objects. Care should be taken to protect the connections from damage. Under no circumstances may the glass have objects placed on it.

Some sight windows are shipped unassembled, as they are to be welded into position and then assembled. Individual pieces should be carefully stored in a manner to avoid damage until installation. The glass requires special attention. It should not be stored or mixed with objects that may cause damage, and should remain wrapped or boxed until assembly.

III. Installation

CAUTION: All Jacoby-Tarbox sight glasses have a nameplate indicating the maximum service conditions for the unit. This information must be reviewed prior to installation and start-up. If there is any doubt of applicability for operation in a system under actual service conditions, consult the factory before placing in service.

A. General Instructions

1. Inspect all items to ensure that they contain no foreign matter, and that the end connections are clean, undamaged, and in line with the adjoining pipe. Examine the glass carefully using a flashlight, for any indications of scratches or cloudiness. If any type of surface flaw is apparent, the unit should not be installed until the glass has been replaced. *(See VII.)*
2. Prepare proper supports to ensure that pipeline stresses will not be transmitted to the sight glass. Misalignment between adjacent connections must be corrected rather than forcing a fit-up. Large, heavy units should be independently supported to avoid piping stress. Ensure the installation location provides access for viewing and maintenance, as well as precluding damage by external forces.
3. Units are designed to withstand thermal stresses caused by temperatures indicated on the nameplate. Poor installation location may impose conditions of thermal shock; such as rapid heating or chilling, where the stress values approach twice those caused by temperature alone, and are added to mechanical stresses caused by pressure and bolting loads.
4. If the sight window is to be welded or brazed, remove the glass. Replace it with a metal blank of the same size. Properly torque the metal in place when welding to protect the glass from thermal stresses and weld splatter. Welding should be done with minimal heat. The unit should be inspected for flat gasket surface, within .005 inch (.13 mm) TIR. (dished less than 1/2º), and cleaned of all weld splatter before reinstalling the glass.

IV. Start-up

CAUTION: Prior to start-up, the information on the nameplate should be compared with the proposed service conditions of the system. Should any discrepancies be noted, immediately contact the factory for advice.

A. Gaskets and seals frequently assume a compression-set over a period of time. The unit should be re-torqued to the proper value before start-up. *(See Tables 1-3)*

CAUTION: Do not tighten or loosen any fasteners while equipment is in operation.

B. The values for torque shown in *Tables 1-3* are representative for the majority of styles and usual service conditions encountered with Jacoby-Tarbox sight flow indicators and sight windows. Please consult the factory if your unit or service conditions are not covered in the chart.

C. If the unit is subjected to heat during operation, the system should be taken to ambient temperature and pressure after a few hours of operation. Retorque the fasteners to the proper values, in 1 to 3 foot pounds (1-4 N' m) increments. Check the glass in the unit before start-up, to ensure that there are no chips, scratches or blemishes. Use a flashlight or other bright, concentrated light to examine the glass carefully. If any type of flaw is apparent, start-up should be delayed pending the replacement of glass and gaskets. *(See Section VIII)*

V. Routine Maintenance

A. Periodic visual inspection should be made to ensure that no leaks are evident and that there is no clouding, scratching, or blemishing of the glass. New installations should be inspected daily until a routine inspection cycle is established.

B. Keep glasses clean using commercial glass cleaners. Cleaning should be done without removing glass; this may require recirculation of cleaning material if process side of glass is not accessible. Never use harsh abrasives, wire brushes, metal scrapers, or anything that may scratch the glass. **Do not attempt to clean glasses while equipment is in operation**. Inspect for scratches, shining a bright concentrated light (powerful flashlight will suffice) at about a 45º angle. Any scratch that glistens and catches a fingernail, or star or crescent-shaped mark that glistens is cause for replacement. Process surface that appears cloudy or roughened, after cleaning, is evidence of chemical attack and is cause for replacement.

C. **IMPORTANT: Glass, shields and gaskets that have been removed, MUST BE REPLACED. Used parts may contain hidden damage. Induced stress in glass and de-tempering are NOT visible to the naked eye. Be sure that the replacement glass is proper for the service.**

D. Should leakage around the glass occur **after rebuilding the unit with new glass and gaskets**, check the window. If it is not broken, drop the system pressure to zero, and torque the glass retainer to the recommended value. If leakage persists after re-pressurizing, disassemble according to Section VII and replace the gaskets. If the torque value is less than 75 ft-lbs, the glass does not need to be discarded provided the glass was new and was only used in this test.

VI. Service Instructions-Preliminary Considerations

A. If service is required on the sight glass, nameplate information should be compared to the actual service conditions. If there is any doubt as to the proper unit being utilized for the actual service conditions, consult the factory.

B. Verify that the proper glass and gaskets are available for replacement.

C. A clean area should be available for placing the unit if it is to be removed from the line, and the various component parts.

CAUTION: System pressure must be relieved before attempting any service on the sight glass. The line must be locked out while service is in progress.

VII. Disassembly

A. **Cylindrical glass units - 805-S, 830-F, 850-S, 860-F, 1000-S and 4000-S** must all be removed from the line and bench disassembled. Remove the heads by removing the cap screws or nuts on all models except 4000-S which has a head that is threaded. Carefully remove the glass, gaskets, and other hardware, placing everything on a clean surface.

1. End seal type gaskets are used on Styles 805-S, 830-F, and 850-S. *See Figure 2*.
2. Stuffing box type seals are used on Styles 860-F, 1000-S and 4000-S. *See Figure 3*.

B. **Flat glass units - 90, 100, 200, 300, 400, 608, 910, 935, 960, and all sight windows** may, be disassembled and reassembled in their installed position. Note that model numbers are core model numbers. The following applies to all variations, -F, -FA, -HP, -HPA, -PFA, -SFA, -TFE, -SJ, etceteras. An example of a flat glass seal is shown in *Figure 2*.

1. Threaded type glass retainers are used on 2 inch and smaller style 100-S, 200-S, and 300-S sight glasses and on all S-5400 and S-5500 sight windows. Fit the pins of a spanner wrench into the holes in the face of the glass retainers, and turn counter-clockwise to remove the retainers. The retainers, cushion gaskets, glass discs, and sealing gaskets should be carefully removed and placed in a clean area. Internal indicators such as flaps, drip tubes, or rotors need not be removed.
2. Flange type glass retainers are held in place with from 3 to 24 nuts or cap screws, depending on the model. They should be removed by turning them in a counter clockwise direction. Loosen fasteners evenly in reverse of the pattern shown in *Figure 1*.
3. Remove the glass retainers, cushion gaskets, glass, and sealing gaskets. All parts should be carefully placed on a clean surface. Any internal indicators such as flaps, rotors or drip tubes need not be removed.

VIII. Inspection

A. The glass seating surfaces in the body or weld pad and in the retainer must be carefully cleaned and checked to ensure there are no pieces of old gasket material, chips, dirt or other material on the surfaces. Foreign particles left on the surface may cause local stresses in the glass, and may cause failure.

B. If the unit is being disassembled to replace the glass, inspect the glass to determine if the service life can be extended through another selection. Erosion or corrosion of the inner surface of the glass could indicate chemical or steam attack of the glass by the media. PFA, PCTFE (formerly Kel-F), or mica shields may be used to avoid such attack. UniShield Window Protection can be supplied on any sight flow indicator window. PFA Teflon is fused to the glass, making the shield suitable for vacuum service. Consult the factory for advice.

C. Cracked glass can be caused by pressures in excess of the glass rating, high local stresses due to uneven bolt torque, foreign particles on the glass seating surface, or thermal shock of the glass. It is important to determine the cause for replacement of glass. Check your operating conditions against the ratings on the nameplate. Should there be any question about the applicability of the unit for the service intended, do not proceed without verifying the unit with the maintenance supervisor or engineer.

<u>CAUTION</u>: Even if the glass appears to have no visible damage, it must be discarded whenever a unit is disassembled.

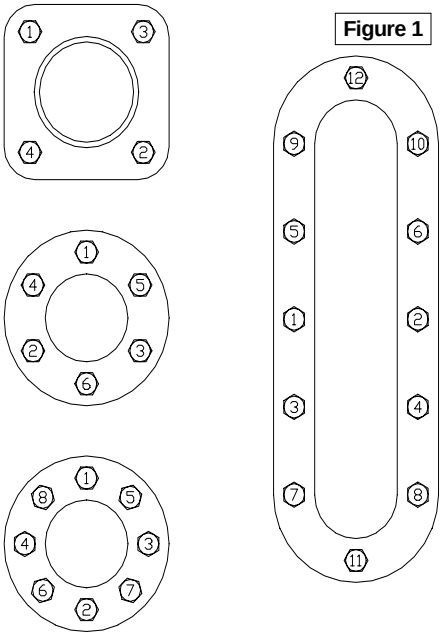

Figure 1

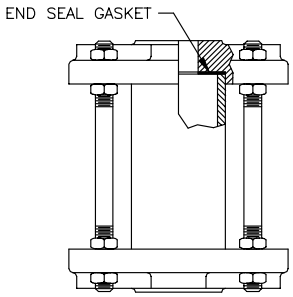

Figure 2

END SEAL GASKET
TYPICAL OF 805-S, 830-F, & 850-S

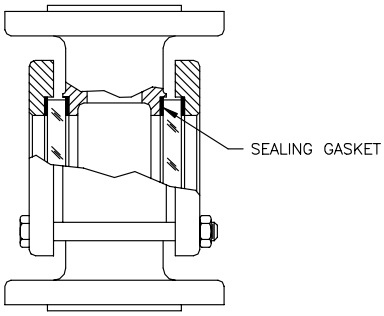

FLAT GLASS SEAL
TYPICAL OF ALL UNITS EQUIPPED WITH GLASS DISCS

IX. Reassembly

A. General Instructions

1. Always reassemble sight glasses using new glass and gaskets. There is potential of hidden damage on used glass. Inspect new glass to ensure that there are no bumps, chips, scratches or other imperfections, and that the gaskets are clean.
2. Glass and gaskets must be verified for the application. Generally, a direct replacement of the glass and gaskets that were in the unit before disassembly will be correct. Tempered borosilicate glass is marked on the edge of flat glass with a black dot or a "T". Annealed borosilicate is unmarked. The nameplate indicates "T boro" or "A boro." Cylindrical glass units use annealed borosilicate glass.

3. Use only gaskets that are supplied by Jacoby-Tarbox. Ascertain that they are clean and fresh with no bumps or tears.

4. The sealing gasket, generally the thicker and softer gasket, is placed on the process side of the glass, in the body or head counterbore, forming the glass seating surface. On flat glass models a cushion gasket must be placed between the glass and the retainer. Ensuring that all surfaces in the body, heads and retainers are clean, and assemble the gaskets and glass into their seats. Ensure the gaskets are centered and are completely within the counterbore provided. Care must be exercised in placing the glass in the seat so that the edges will not be chipped. Place the cushion gasket and retainer on flat glass models over the glass, using care that the glass and gasket are completely seated in the counterbore. Finger tighten fasteners, threaded retainer, or heads, and slide the glass from side to side, or rotate it in its seat, until all parts are seated properly.

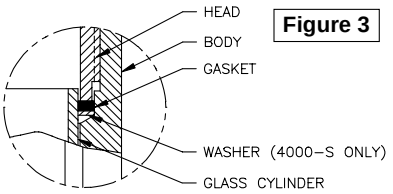

Figure 3

STUFFING BOX SEAL
TYPICAL OF 860-F, 1000-S, & 4000-S

5. Using a torque wrench, tighten the fasteners in a regular pattern to avoid uneven loads on the glass. *See Figure 1.* Torque individual fasteners in stages, moving to the next fastener after each increment of torque. A maximum difference of 5 foot-pounds (7 N' m) between fasteners should be maintained on larger units, and less on smaller ones. Continue torquing until the values shown in Tables 1-3 are attained.

6. In placing units back into the line refer to Section III Installation.

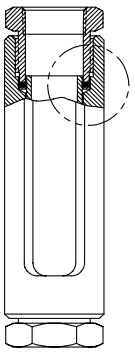

STYLE 4000-S WITH
STUFFING BOX SEAL

B. Instructions for specific models

1. 860-F, 1000-S and 4000-S

Use care in assembling units with stuffing box seals. The glass cylinder must be positioned so that the heads cannot strike the end of the cylinder and chip it. Place the gasket on one end of the cylinder, and slip the cylinder into the body. Center the cylinder lengthwise in the body and install the remaining gasket. Install one head at a time, checking to ensure that there is no contact between the head and the glass. Torque to the proper value.

Note: Particular attention must be paid to the orientation of TFE gaskets so that the media cannot come into contact with the filler material. (See Figure 7)

2. S-l00HP and S-200 HP for service at 2000 PSI or above or units with Fused Silica (quartz).

a) A glass holder is used to reduce compressive forces. *(Figure 4)*

b) Place sufficient shims in the glass holder so that the glass protrudes from the holder .015 to .047 inches (.4 to 1.2 mm) prior to assembly. The shims are fiber or graphite, depending on the application. Note: When a glass holder is used, do not place a cushion gasket between the glass holder and the retainer.

c) Assemble the unit as described in the general reassembly instructions in Section VII.

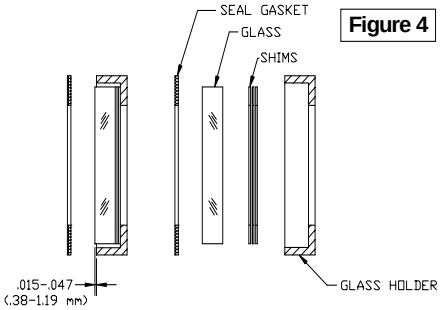

Figure 4

GLASS HOLDER ASSEMBLY

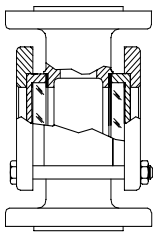

F-910 WITH GLASS HOLDERS

3.* Flat glass units with Dual Windows *(Fig. 5)

a) The glass is encased in a metal cartridge.

b) Place sufficient shims in the glass holder so that the glass protrudes from the holder .015 to .047 inches (.4 to 1.2 mm) prior to assembly. The shims are fiber or graphite, depending on the application.

c) The unit can now be assembled as in the general reassembly instructions in VII. D. l.

4. 805-S, 830-F and 850-S

a) Place a nut on each tie rod, and turn it down about one inch.

b) Place the rods through the rod holes in the head so that the short threaded portions of the rods are exposed on the outside of the head. Install the outer nut, keeping all nuts loose. Place the assembly of head, rods and nuts outer side down.

c) Carefully place the sealing gasket in the head counter bore. Place the glass cylinder over the gasket, being sure that it is seated in the recess, and the gasket fully covers the end of the cylinder.

d) Install the jam nuts on the other end of the rods, threading them far enough so the remaining head and gasket may be installed. Using care to ensure proper seating, install the gasket, head and outer nuts.

e) Torque the outer nuts to the values shown in Table 1 in small increments. When the proper value is achieved, pull the jam nuts (inner nuts) tight against the heads. Units of this type are shown in *Figure 2*.

Figure 5

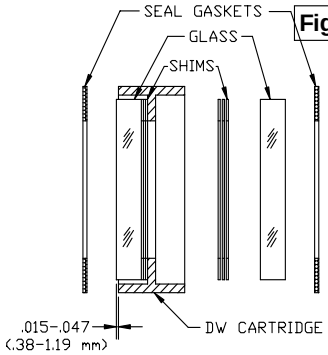

DUAL WINDOW

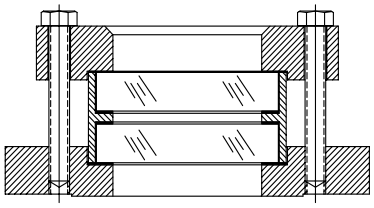

DUAL WINDOW INSTALLED IN 5005-DW UNIT

X. Torque Notes

A. Torque values given are minimum torque required to seal.

B. Torque values should not be exceeded by more than the smaller of 20 Ft-Lbs or 1.5 times the tabular values.

C. Always use the highest possible torques value when the unit is used in gas service. Contact the factory for special service questions.

D. Consult factory for models and configurations not listed in the following tables.

TABLE 1: CYLINDRICAL SIGHT FLOW INDICATORS - TORQUE VALUES BY GASKET MATERIAL

		Neoprene, Buna, EPDM, Silicone		TFE w/Neoprene Insert, Viton, Teflon (G3545)		Garlock (IFG), Graphite		TFE w/ Fiber Insert, Gylon (3500, 3504, 3510)	
MODEL	**SIZE**	**Ft-Lbs**	**N-M**	**Ft-Lbs**	**N-M**	**Ft-Lbs**	**N-M**	**Ft-Lbs**	**N-M**
805-S, 805-SD	1/8, 3/4	2	2.7	2	2.7	3	4.1	3	4.1
805-S, 805-SD	1	3	4.1	3	4.1	4	5.4	4	5.4
805-S, 805-SD	1¼,1½	4	5.4	5	6.8	5	6.8	6	8.1
805-S, 805-SD	2	7	9.5	8	10.8	9	12.2	10	13.6
830-F, 830-FD	1/8, 3/4	1	1.4	1	1.4	1	1.4	1	1.4
830-F, 830-FD	1	2	2.7	2	2.7	2	2.7	3	4.1
830-F, 830-FD	1¼,1½	2	2.7	2	2.7	2	2.7	3	4.1
830-F, 830-FD	2	5	6.8	5	6.8	6	8.1	7	9.5
830-F, 830-FD	2-1/2	6	8.1	7	9.5	8	10.8	9	12.2
830-F, 830-FD	3	9	12.2	10	13.6	12	16.3	13	17.6
830-F, 830-FD	4	13	17.6	14	19.0	17	23.1	18	24.4
830-F, 830-FD	6	27	37.0	31	41.8	36	48.4	39	53.1
830-F, 830-FD	8	47	63.6	53	71.2	61	83.5	67	91.1
830-F, 830-FD	10	34	46.5	38	52.2	44	59.8	48	65.6
830-F, 830-FD	12	53	72.2	59	79.7	68	92.0	73	99.7
850-S	1/4 - 2	17	23.1	19	25.8	22	29.8	24	32.5

TABLE 2: FLAT GLASS SIGHT FLOW INDICATORS

		TORQUE VALUES BY GASKET MATERIAL IN FT-LBS (N-M)							
		Neoprene, Buna, EPDM, Silicone		**TFE w/Neoprene Insert, Viton, Teflon (G3545)**		**Garlock (IFG), Graphite**		**TFE w/ Fiber Insert, Gylon (3500,3504,3510)**	
MODEL	**SIZE**	**Ft-Lbs**	**N-M**	**Ft-Lbs**	**N-M**	**Ft-Lbs**	**N-M**	**Ft-Lbs**	**N-M**
90, 90-D	1	5	6.8	5	6.8	6	8.1	7	9.5
90, 90-D	1-1/2	12	16.3	13	17.6	16	21.7	18	24.4
90, 90-D	2	19	25.8	22	29.8	26	35.3	29	39.3
90, 90-D	2-1/2, 3	44	59.7	51	69.2	61	82.7	67	90.9
90, 90-D	4	73	99.0	83	113	99	134	110	149
90, 90-D	6	156	212	175	237	203	275	221	300
100-S,200-S,300-S	1/8, 3/8	15	20.3	17	23.4	20	27.1	23	31.2
100-S,200-S,300-S	1/2, 3/4	20	27.1	23	31.2	27	36.6	30	41.0
100-S,200-S,300-S	1	30	40.7	35	46.8	41	54.9	45	61.4
100-S,200-S,300-S	1-1/4,1-1/2	50	67.8	58	78	68	91.5	76	102
100SF,200SF,300SF	1/2, 3/4	2	2.7	2	2.7	2	2.7	2	2.7
100SF,200SF,300SF	1	3	4.1	4	5.4	5	6.8	5	6.8
100SF,200SF,300SF	1-1/4,1-1/2	7	9.5	9	12.2	10	13.6	11	14.9
100SF,200SF,300SF	2	14	19.0	16	21.7	19	25.8	22	29.8
608-F, 910-F	1/2, 3/4	2	2.7	2	2.7	2	2.7	2	2.7
608-F, 910-F	1	3	4.1	4	5.4	5	6.8	5	6.8
608-F, 910-F	1-1/2	7	9.5	9	12.2	10	13.6	11	14.9
608-F, 910-F	2	10	13.6	11	14.9	14	19.0	15	20.3
608-F, 910-F	2-1/2, 3	33	44.7	38	51.5	46	62.4	51	69.2
608-F, 910-F	4	55	74.6	63	85.4	75	102	83	113
608-F, 910-F	6	117	159	131	178	152	206	166	225
608-F, 910-F	8	167	226	186	252	215	292	235	319
608-F, 910-F	10, 16	81	110	93	126	111	150	122	165
960-F	1	3	4.1	4	5.4	5	6.8	5	6.8
960-F	1-1/2	7	9.5	9	12.2	10	13.6	11	14.9
960-F	2	14	19.0	16	21.7	19	25.8	22	29.8
960-F	2-1/2, 3	33	44.7	38	51.5	46	62.4	51	69.2
960-F	4	55	74.6	63	85.4	75	102	83	112
960-F	6	117	159	131	178	152	206	166	225
608-F TFE, 910-F TFE	1	N/A	N/A	5	6.8	N/A	N/A	7	9.5
608-F TFE, 910-F TFE	1-1/2	N/A	N/A	10	13.6	N/A	N/A	14	19.0
608-F TFE, 910-F TFE	2	N/A	N/A	18	24.4	N/A	N/A	25	33.9
608-F TFE, 910-F TFE	3	N/A	N/A	34	46.1	N/A	N/A	47	63.7
608-F TFE, 910-F TFE	4	N/A	N/A	23	31.2	N/A	N/A	31	42.0
608-F TFE, 910-F TFE	6	N/A	N/A	40	54.2	N/A	N/A	53	71.9
608-F TFE, 910-F TFE	8	N/A	N/A	57	77.3	N/A	N/A	75	102
608-F TFE, 910-F TFE	10	N/A	N/A	62	84.1	N/A	N/A	82	111

Multiply torque values by 1.25 for Dual Window assemblies.

TABLE 3: FLAT GLASS SIGHT FLOW INDICATORS

		TORQUE VALUES BY GASKET MATERIAL IN FT-LBS (N-M)							
		Neoprene, Buna, EPDM, Silicone		**TFE w/Neoprene Insert, Viton, Teflon (G3545)**		**Garlock (IFG), Graphite**		**TFE w/ Fiber Insert, Gylon (3500,3504,3510)**	
MODEL	**SIZE**	Ft-Lbs	N-M	Ft-Lbs	N-M	Ft-Lbs	N-M	Ft-Lbs	N-M
100HP,200HP (600#)	1/8, 3/8	2	2.7	2	2.7	3	4.1	3	4.1
100HP,200HP (600#)	1/2, 3/4	7	9.5	8	10.8	9	12.2	10	13.6
100HP,200HP (600#)	1	7	9.5	8	10.8	9	12.2	10	13.6
100HP,200HP (600#)	1-1/4,1-1/2	20	27.1	22	29.8	25	33.9	27	36.6
100HP,200HP (600#)	2	30	40.7	32	43.4	36	48.8	39	52.9
100HP,200HP (1000#)	1/8, 3/8	3	4.1	3	4.1	3	4.1	3	4.1
100HP,200HP (1000#)	1/2, 3/4	9	12.2	10	13.6	11	14.9	12	16.3
100HP,200HP (1000#)	1	9	12.2	10	13.6	11	14.9	12	16.3
100HP,200HP (1000#)	1-1/4,1-1/2	27	36.6	29	39.3	32	43.4	34	46.1
100HP,200HP (1000#)	2	40	54.2	43	58.3	47	63.7	50	67.8
100HP,200HP (2000#)	1/8, 3/8	10	13.6	11	14.9	12	16.3	13	17.6
100HP,200HP (2000#)	1/2, 3/4	13	17.6	14	19.0	15	20.3	16	21.7
100HP,200HP (2000#)	1	15	20.3	16	21.7	17	23.1	18	24.4
100HP,200HP (2000#)	1-1/4,1-1/2	53	71.9	56	75.9	59	80.0	62	84.1
100HP,200HP (2000#)	2	67	90.9	70	94.9	74	100	77	104
100HP,200HP (3000#)	1/8, 3/8	12	16.3	13	17.6	15	20.3	16	21.7
100HP,200HP (3000#)	1/2, 3/4	17	23.1	18	24.4	19	25.8	20	27.1
100HP,200HP (3000#)	1	21	28.5	21	28.5	22	29.8	23	31.2
100HP,200HP (3000#)	1-1/4,1-1/2	87	118	89	121	93	126	96	130
100HP,200HP (3000#)	2	94	128	97	132	101	137	103	140
608HP, 910HP (300#)	1/2, 3/4	3	4.1	3	4.1	4	5.4	4	5.4
608HP, 910HP (300#)	1	4	5.4	5	6.8	5	6.8	6	8.1
608HP, 910HP (300#)	1-1/2	12	16.3	13	17.6	16	21.7	17	23.1
608HP, 910HP (300#)	2	12	16.3	13	17.6	16	21.7	17	23.1
608HP, 910HP (300#)	2-1/2, 3	41	55.6	46	62.4	53	71.9	58	78.6
608HP, 910HP (300#)	4	69	93.6	77	104	89	121	97	132
608HP, 910HP (300#)	6, 8	53	71.9	59	80.0	68	92.2	74	100
608HP, 910HP (600#)	1/2, 3/4	4	5.4	5	6.8	5	6.8	5	6.8
608HP, 910HP (600#)	1	5	6.8	6	8.1	7	9.5	7	9.5
608HP, 910HP (600#)	1-1/2	16	21.7	18	24.4	20	27.1	22	29.8
608HP, 910HP (600#)	2	16	21.7	18	24.4	20	27.1	22	29.8
608HP, 910HP (600#)	2-1/2, 3	56	75.9	61	82.7	69	93.6	74	100
608HP, 910HP (600#)	4	98	133	106	144	118	160	126	171
608HP, 910HP (600#)	6, 8	75	102	81	110	90	122	96	130

Multiply torque values by 1.25 for Dual Window assemblies.

TABLE 4: FLAT GLASS SIGHT FLOW INDICATORS

		TORQUE VALUES BY GASKET MATERIAL IN FT-LBS (N-M)							
		Neoprene, Buna, EPDM, Silicone		**TFE w/Neoprene Insert, Viton, Teflon (G3545)**		**Garlock (IFG), Graphite**		**TFE w/ Fiber Insert, Gylon (3500,3504,3510)**	
MODEL	**SIZE**	Ft-Lbs	N-M	Ft-Lbs	N-M	Ft-Lbs	N-M	Ft-Lbs	N-M
608-FA,910-FA,935-FA	1/2, 3/4	3	4.1	3	4.1	3	4.1	3	4.1
608-FA,910-FA,935-FA	1	3	4.1	3	4.1	5	6.8	5	6.8
608-FA,910-FA,935-FA	1-1/2, 2	7	9.5	8	10.8	10	13.6	11	14.9
608-FA,910-FA,935-FA	2-1/2, 3	35	33.9	29	39.3	33	44.7	36	48.8
608-FA,910-FA,935-FA	4	40	54.2	45	61.0	52	70.5	58	78.6
608-FA,910-FA,935-FA	6	60	81.4	65	88.1	70	94.9	80	109
608-FA,910-FA,935-FA	8	90	122	100	136	110	149	120	163
608-FA,910-FA,935-FA	10-16	80	109	90	122	110	149	120	163
960-FA	1	3	4.1	3	4.1	5	6.8	5	6.8
960-FA	1-1/2	7	9.5	8	10.8	10	13.6	11	14.9
960-FA	2	14	19.0	16	21.7	19	25.8	22	29.8
960-FA	2-1/2, 3	25	33.9	29	39.3	33	44.7	36	48.8
960-FA	4	40	54.2	45	61.0	52	70.5	58	78.6
960-FA	6	60	81.4	65	88.1	70	94.9	80	109
608, 910-FA-TFE	1	N/A	N/A	5	6.8	N/A	N/A	6	8.1
608, 910-FA-TFE	1-1/2	N/A	N/A	10	13.6	N/A	N/A	14	19.0
608, 910-FA-TFE	2	N/A	N/A	14	19.0	N/A	N/A	19	25.8
608, 910-FA-TFE	3	N/A	N/A	26	35.3	N/A	N/A	35	47.5
608, 910-FA-TFE	4	N/A	N/A	18	24.4	N/A	N/A	24	32.5
608, 910-FA-TFE	6	N/A	N/A	34	46.1	N/A	N/A	43	58.3
608, 910-FA-TFE	8	N/A	N/A	48	65.1	N/A	N/A	61	82.7
608, 910-FA-TFE	10	N/A	N/A	53	71.9	N/A	N/A	66	89.5
608,910,960HPA-300	1/2, 3/4	3	4.1	3	4.1	4	5.4	4	5.4
608,910,960HPA-300	1	4	5.4	4	5.4	5	6.8	5	6.8
608,910,960HPA-300	1-1/2, 2	14	19	15	20.3	16	21.7	18	24.4
608,910,960HPA-300	2-1/2, 3	45	61	48	65.1	53	71.9	57	77.3
608,910,960HPA-300	4	56	75.9	60	81.4	66	89.5	70	94.9
608,910,960HPA-300	6, 8	50	67.8	53	71.9	59	80.0	62	84.1
608,910,960HPA-600	1/2, 3/4	5	6.8	5	6.8	6	8.1	6	8.1
608,910,960HPA-600	1	6	8.1	6	8.1	7	9.5	7	9.5
608,910,960HPA-600	1-1/2, 2	21	28.5	22	29.8	24	32.5	25	33.9
608,910,960HPA-600	2-1/2, 3	70	94.9	73	99.0	79	107	82	111
608,910,960HPA-600	4	90	122	94	128	100	136	104	141
608,910,960HPA-600	6, 8	80	109	54	73.2	89	121	93	126

Multiply torque values by 1.25 for Dual Window assemblies.

TABLE 5: TUBULAR GLASS SIGHT FLOW INDICATORS w/ STUFFING BOX SEALS

		TORQUE VALUES BY GASKET MATERIAL IN FT-LBS (N-M)							
		Neoprene, Buna		**TFE w/Neoprene Insert, Viton**		**TEFLON w/ Gylon 3545 Insert**		**TFE w/ Fiber Insert, Gylon (3500,3504,3510)**	
MODEL	**SIZE**	Ft-Lbs	N-M	Ft-Lbs	N-M	Ft-Lbs	N-M	Ft-Lbs	N-M
1000-S	1/8, 1/2	5	6.8	7	9.5	N/A	N/A	N/A	N/A
1000-S	3/4, 1	8	10.8	10	13.6	N/A	N/A	N/A	N/A
1000-S	1-1/4, 1-1/2	15	20.3	18	24.4	N/A	N/A	N/A	N/A
1000-S	2	18	24.4	22	29.8	N/A	N/A	N/A	N/A
4000-S	1/8, 3/8	12	16.3	15	20.3	N/A	N/A	N/A	N/A
4000-S	1/2	15	20.3	18	24.4	N/A	N/A	N/A	N/A
4000-S	3/4	30	40.7	40	54.2	N/A	N/A	N/A	N/A
4000-S	1	30	40.7	40	54.2	N/A	N/A	N/A	N/A
4000-S	1-1/4, 1-1/2	40	54.2	50	67.8	N/A	N/A	N/A	N/A
860-F	1/2	15	20.3	18	24.4	N/A	N/A	N/A	N/A
860-F	3/4	18	24.4	22	29.8	N/A	N/A	N/A	N/A
860-F	1	20	27.1	25	33.9	N/A	N/A	N/A	N/A
860-F	1-1/2	25	33.9	30	40.7	N/A	N/A	N/A	N/A
860-F	2	30	40.7	40	54.2	N/A	N/A	N/A	N/A
860-F	2-1/2	35	47.5	45	61.0	N/A	N/A	N/A	N/A
860-F	3	40	54.2	50	67.8	20-25	27-34	N/A	N/A

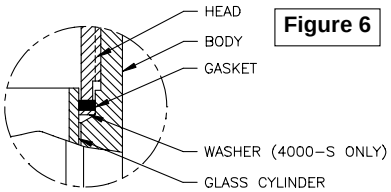

Figure 6

STUFFING BOX SEAL
TYPICAL OF 860-F, 1000-S, & 4000-S

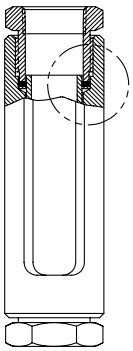

STYLE 4000-S WITH STUFFING BOX SEAL

Figure

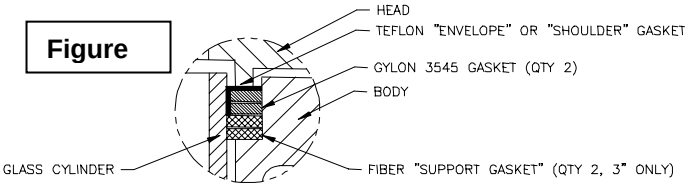

SPECIAL STUFFING BOX SEAL
TYPICAL OF 860-F, 1000-S, & 4000-S WITH PTFE/GYLON 3545 SEALS

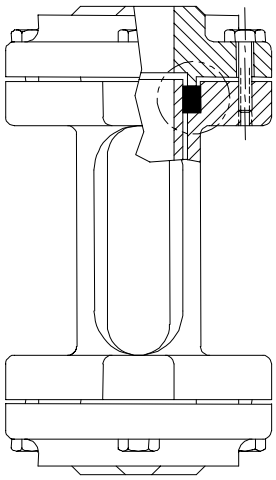

STYLE 860-F WITH STUFFING BOX SEAL

TABLE 6: SIGHT WINDOWS

		TORQUE VALUES BY GASKET MATERIAL IN FT-LBS (N-M)							
		Neoprene, Buna, EPDM, Silicone		**TFE w/Neoprene Insert, Viton, Teflon (G3545)**		**Garlock (IFG), Graphite**		**TFE w/ Fiber Insert, Gylon (3500,3504,3510)**	
MODEL	**SIZE**	Ft-Lbs	N-M	Ft-Lbs	N-M	Ft-Lbs	N-M	Ft-Lbs	N-M
5005-DW (150)	2"	11	14.9	13	17.6	16	21.7	18	24.4
5005-DW (150)	3"	16	21.7	19	25.8	23	31.2	26	35.3
5005-DW (150)	4"	17	23.1	19	25.8	24	32.5	26	35.3
5005-DW (150)	6"	18	24.4	21	28.5	24	32.5	27	36.6
5005-DW (150)	8"	45	61.0	51	69.2	61	82.7	67	90.9
5005-DW (300)	2"	5	6.8	5	6.8	6	8.1	7	9.5
5005-DW (300)	3"	10	13.6	11	14.9	13	17.6	14	19.0
5005-DW (300)	4"	19	25.8	22	29.8	26	35.3	29	39.3
5005-DW (300)	6"	20	27.1	22	29.8	25	33.9	27	36.6
5005-DW (300)	8"	38	51.5	42	57.0	49	66.4	53	71.9
5005-DW (600)	2"	6	8.1	6	8.1	7	9.5	8	10.8
5005-DW (600)	3"	13	17.6	14	19.0	16	21.7	17	23.1
5005-DW (600)	4"	24	32.5	27	36.6	31	42.0	34	46.1
5005-DW (600)	6"	29	39.3	31	42.0	34	46.1	37	50.2
5005-DW (600)	8"	55	74.6	59	80.0	66	89.5	70	94.9
5000, 5100	1, 1-1/4	4	5.4	5	6.8	6	8.1	7	9.5
5000, 5100	1-1/2	9	12.2	10	13.6	13	17.6	14	19.0
5000, 5100	2	11	14.9	13	17.6	16	21.7	18	24.4
5000, 5100	2-1/2	21	28.5	24	32.5	30	40.7	34	46.1
5000, 5100	3	29	39.3	34	46.1	42	57.0	47	63.7
5000, 5100	4	20	27.1	23	31.2	28	38.0	31	42.0
5000, 5100	5	26	35.3	30	40.7	36	48.8	40	54.2
5000, 5100	6	35	47.5	40	54.2	48	65.1	53	71.9
5200	#2	3	4.1	4	5.4	5	6.8	5	6.8
5200	#3	4	5.4	5	6.8	6	8.1	7	9.5
5200	#4	8	10.8	10	13.6	12	16.3	14	19.0
5200	#5	12	16.3	14	19.0	17	23.1	19	25.8
5200	#6	16	21.7	18	24.4	22	29.8	25	33.9
5200	#7	23	31.2	27	36.6	32	43.4	36	48.8
5200	#8	23	31.2	27	36.6	32	43.4	35	47.5
5200-PVQ	#2	5	6.8	5	6.8	6	8.1	7	9.5
5200-PVQ	#3	5	6.8	5	6.8	7	9.5	7	9.5
5200-PVQ	#4	11	14.9	13	17.6	15	20.3	17	23.1
5200-PVQ	#5	17	23.1	20	27.1	24	32.5	27	36.6
5200-PVQ	#6	22	29.8	25	33.9	31	42.0	35	47.5
5200-PVQ	#7	27	36.6	32	43.4	38	51.5	43	58.3
5200-PVQ	#8	39	52.9	45	61.0	54	73.2	60	81.4
5300-PVQ	1 x 6	14	19.0	16	21.7	20	27.1	22	29.8
5300-PVQ	2 x 12	26	35.3	30	40.7	37	50.2	41	55.6
5300-PVQ	3 x 12	46	62.4	54	73.2	65	88.1	73	99.0
5300-PVQ	3 x 18	57	77.3	67	90.9	81	110	91	123
5300-PVQ	4 x 18	56	75.9	65	88.1	79	107	88	119
5300-PVQ	4 x 24	60	81.4	70	94.9	85	115	95	129
5400-S	2	20	27.1	23	31.2	27	36.6	30	41.0
5400-S	3	50	67.8	58	78	68	91.5	76	102

Multiply torque values by 1.25 for Dual Window assemblies.

THE

Clark·Reliance®

CORPORATION

Your Global Authority On Level And Flow Products For The Power And Process Industries

Level Indication Products

Reliance®

Boiler Trim

- Water Columns
- Prismatic Gages
- Flat Glass Gages
- Simpliport® Bicolor Gages
- Water Gage Valves
- Gage Cocks
- Levalarms®

Remote Level Indicators/Controls

- Electro Eye-Hye®
- Probe Columns
- TWIPS®
- Fiber Level® Systems

JERGUSON®

Liquid Level Gages & Valves

- Tubular Gages
- Armored Flat Glass Gages
- Safety Ball Check Isolation Valves
- Illuminators

Magnetic Gages

- Local Indication
- Transmitters
- Point Switches

Flow Products

JACOBY·TARBOX®

Sight Flow Indicators

- Sight Windows
- Safety Sight Glasses
- Sanitary Sight Flows
- Illuminators

Eductors

- Jet Pumps
- Ejectors
- Injectors
- Venturi Pumps
- Tank Mixing Eductors

ANDERSON®

Separators

- Gas/Liquid Separators
- Filter Separators
- Coalescing Filters
- Exhaust Heads
- Internal Purifiers
- Steam Drum Separators
- Combination Separator Traps

Clark™

Steam Specialty Products

- Fluid Recovery Pumps
- Condensate Pumps
- Pressure Powered Pumps
- Standard & Specialty Steam Traps

JACOBY·TARBOX®
A Division Of The Clark·Reliance Corporation
16633 FOLTZ INDUSTRIAL PARKWAY • STRONGSVILLE, OHIO 44149 • USA
TELEPHONE: (440) 572-1500 • FACSIMILE: (440) 238-8828 • WWW.CLARK-RELIANCE.COM

ISO 9001 REGISTERED