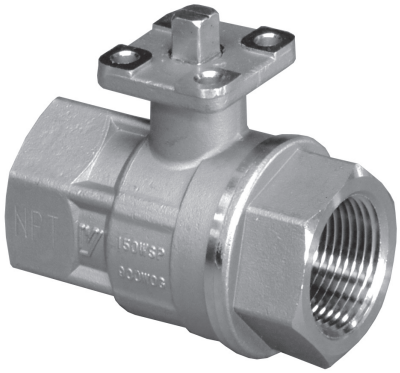

DM9900F-XXX-S6 Series Full Port Ball Valve

Quick Spec	
Product Scope	
Size Range	1/4" – 2", Full Port
Body Type	2-pc, End Entry, FNPT Ends
Pressure Rating	1000 psi WOG (69 bar)
Temperature Range / WSP	-20°F thru 366°F -29°C thru 186°C
Body	Stainless Steel
Trim	Stainless Steel, Anti-Static Design
Seats	PTFE, Viton O-ring backed
Stem Seals/Bearing	2x's Viton O-rings / PTFE
Operator / Mtg Pad	Lever Not Available / ISO 5211
Design Standards	
Threaded End Design	ASME B1.20.1
Testing Standards	
Pressure Testing	MSS-SP-110

Features

- Investment cast body construction
- ISO 5211 actuator mounting pad
- Blow-out proof stem
- PTFE seats, O-ring backed low operating torque
- O-ring stem seals
- 100% tested

Series DM9900 Pressure-Temperature Ratings

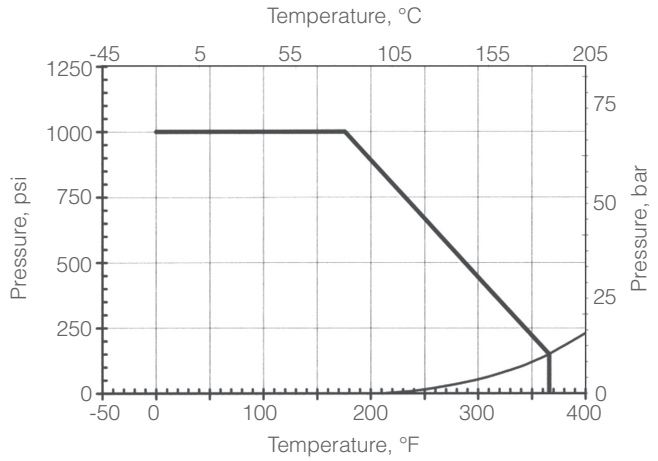

Materials of Construction

Part	Material
Body	ASTM A276 Gr CF8M
End Cap	ASTM A276 Gr CF8M
Ball	AISI 316 SS or Gr CF8M
Stem	AISI 316 SS
Seat	PTFE
O-Ring, Seat	FKM
Thrust Washer, Stem	PTFE
O-Ring, Stem	FKM
Seal, Stem	PTFE

Technical Specifications

Valve Size Inches	Operating Torque, in-lb	Flow Coefficient, Cv
1/4", 3/8", 1/2"	38	19.4
3/4"	45	35.1
1"	53	51.2
1-1/4"	66	106
1-1/2"	90	274
2"	151	315

Technical Specifications, metric

Valve Size NPS	Operating Torque, N.m	Flow Coefficient, Kv
DN8, DN12, DN15	4,3	16,7
DN20	5,1	30,2
DN25	6,0	44
DN32	7,5	91
DN40	10,2	236
DN50	17,0	271

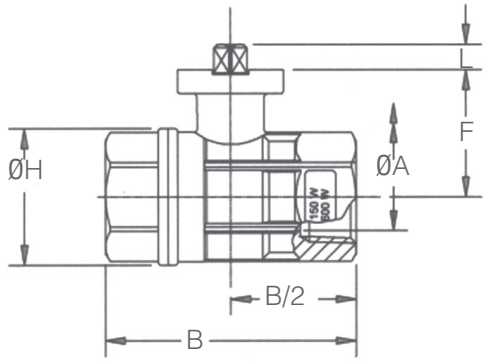

ART1010

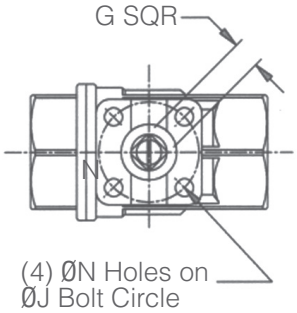

Dimensions, Inches

Valve Size Inches	DM9900 Series ØA Port	B Length	F C/L-Pad	ØH Body OD	ISO	ØJ B.C.	ØN Hole	G Stem Sq	L Stem Ext	Wt (lbs)
1/4", 3/8", 1/2"	0.56	2.63	1.28	1.35	F03	1.42	0.23	0.350	0.35	0.68
3/4"	0.75	3.07	1.36	1.65	F03	1.42	0.23	0.350	0.35	0.91
1"	0.95	3.54	1.75	2.02	F03	1.42	0.23	0.350	0.35	1.35
1-1/4"	1.18	3.93	1.89	2.53	F03	1.42	0.23	0.350	0.35	2.22
1-1/2"	1.49	4.40	2.48	3.03	F05	1.97	0.27	0.430	0.43	3.69
2"	1.97	5.31	2.84	3.81	F05	1.97	0.27	0.430	0.43	6.49

Dimensions, mm

Valve Size NPS	DM9900 Series ØA Port	B Length	F C/L-Pad	ØH Body OD	ISO	ØJ B.C.	ØN Hole	G Stem Sq	L Stem Ext	Wt (kgs)
DN8, DN12, DN15	14,2	66,8	32,5	34,3	F03	36,0	5,8	8,89	8,9	0,31
DN20	19,1	78,0	34,5	41,9	F03	36,0	5,8	8,89	8,9	0,41
DN25	24,1	89,9	44,5	51,3	F03	36,0	5,8	8,89	8,9	0,61
DN32	30,0	99,8	48,0	64,3	F03	36,0	5,8	8,89	8,9	1,01
DN40	37,8	111,8	63,0	77,0	F05	50,0	6,9	10,92	10,9	1,67
DN50	50,0	134,9	72,1	96,8	F05	50,0	6,9	10,92	10,9	2,94

Model	__	Size	__	Body Mat'l		1	2	3	4	5	6	7	8	9	10	11	12

Model Number	
DM9900F	2 Piece Ball Valve

Size	
025	1/4"*
038	3/8"*
050	1/2"
075	3/4"
100	1"
125	1-1/4"
150	1-1/2"
200	2"

Body Material	
S6	CF8M

1	Packing
A	PTFE/PTFE

2	End Connections
A	FNPT

3&4	Operation
HL	Lever (standard)
NN	None
P1	UT-0A-DA STD
P2	UT-0-DA STD
P3	UT-1-DA STD
P4	UT-2-DA STD
P5	UT-2.5-DA STD
S1	UT-0-SR STD
S2	UT-1-SR STD
S3	UT-2-SR STD
S4	UT-2.5-SR STD
S5	UT-3-SR-STD
M1	ER-1-2.5-4 110 VAC
M2	ER-2-5-4 110 VAC
M3	ER-3-5-4 110 VAC
ZZ	Non-Standard

5&6	Actuator Pressure
60	60 psi
80	80 psi
NN	N/A (no pneumatic actuator)
ZZ	Non-Standard

7&8	Solenoid Feature	Act. Type
00	None	
3A	3W 8551-120VAC N4 UT-0/5	SR
3C	3W EF8551-120VAc N7 UT-0/5	SR
3J	3W 8317G35-120VAC N4 UT-0/2.5	SR
3M	3W 8321G1-120VAC N4 UT-3/5	SR
3Q	3W EF8317G35-120VAC N7 UT-0/2.5	SR
3R	3W EF8321G1-120VAC N7 UT-3/5	SR
4A	4W 8551-120VAC N4 UT-0A	DA
4B	4W 8551-120VAC N4 UT-0/5	DA
4D	4W EF8551-120VAC N7 UT-0A	DA
4E	4W EF8551-120VAC N7 UT0/5	DA
ZZ	Non-Standard	

9&10	Limit Switch
00	None
AA	LS FMYB-5120-N4 to UT-0/3
AC	LS AMYB-5120-N7 to UT-0/3
ZZ	Non-Standard

11&12	Fail Position
NN	Fail Position N/A (No "SR" Actuator)
01	Fail Closed
02	Fail Open

*1/4" and 3/8" uses reducer bushings (1/2" valve)

Marwin Valve
A Division of Richards Industries, 3170 Wasson Road, Cincinnati, OH 45209
toll free. 800.543.7311, local. 513.533.5600, fax. 513.871.0105
www.marwinvalve.com