Triac Series 24 High Pressure Ball Valves feature a high quality investment cast body and end. They are available in 1/4" through 2" (all are full port except the 2" size). Superior leak protection is accomplished by using our patented "Pyramidal" stem seal system shown in the graphic below. This advanced system protects against wear and leakage experienced by other ball valves.

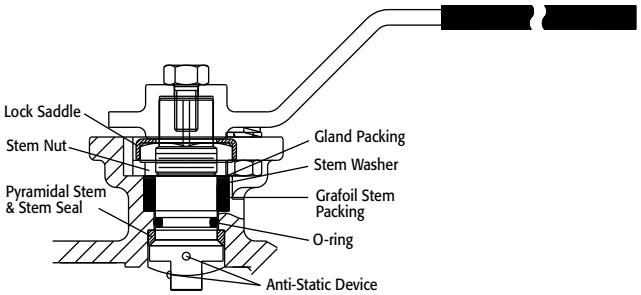

VALVE SIZE	VALVE Cv
1/4"	7
3/8"	8
1/2"	15
3/4"	35
1"	50
1-1/4"	95
1-1/2"	180
2"	210

Delrin seats are standard in these high performance valves. See pressure temperature chart for performance particulars.

Easy to Automate!

See automated data sheets for pre-sized assemblies

Pneumatic

Electric

TRIAC® CONTROLS

Series 24

FIRESAFE

HIGH PRESSURE
2-Piece Design

Sizes 1/4"– 2"
(1/4"– 1-1/2" Full Port,
2" Reduced Port)

Direct Actuator Mount
3000 psi WOG

High Cycle Design

316 SS Body, Ball and Stem

Pyramidal Stem Packing System

Compliant to NACE MR0175

Blowout Proof Stem

ISO 5211 Mounting

Locking Handle Standard

STANDARDS

ANSI	B16.34, B16.25, B1.20.1, B16.11
API	6D, 598
ISO	5211, 5209, 5752, 7/1, 261
MSS	PS25, PS72
BS	5351, 6755-1, 6755-2

HOW TO ORDER MANUAL VALVES

SAMPLE PART #

24-TH-0200-XXX

Valve Series
Threaded Ends
Valve Size
Seat Material
Special Designation
Additional Special Designation

See part number matrix for itemized options

SERIES 24 2-Piece

Firesafe

A-T Controls, Inc.
9955 International Blvd.
Cincinnati, Ohio 45246
www.atcontrols.com
PHONE (513) 247-5465
FAX (513) 247-5462
sales@atcontrols.com

24M-20130430
Copyright 2013 A-T Controls, Inc.

Series 24

2-Piece Direct Mount Ball Valve
Integrated ISO 5211 Mounting Pad

3000 psi WOG by size
1/4" to 1-1/2" Full Port
2" Reduced Port

Pressure vs. Temperature Chart
for Valve 1/4" to 2"

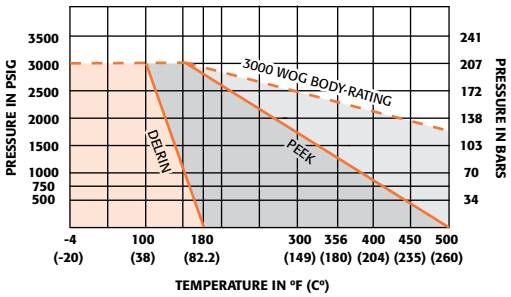

NOTE: Dotted line shows the rating for valve body. Solid line shows the rating for valve seat. Both ratings need to be considered when determining the limitation of the valve for specific application.

Consult factory for other seat materials

BREAKAWAY TORQUES DELRIN SEATS	
1/4"	122
3/8"	122
1/2"	153
3/4"	184
1"	247
1-1/4"	470
1-1/2"	553
2"	553

NOTE: For other seat material, consult factory

MATERIALS LIST

NO.	PART NAME	QTY.	MATERIAL
1	Body	1	CF8M/WCB
2	End Cap	1	CF8M/WCB
3	Ball	1	CF8M
4	Anti-Static Stem	1	SS316
5	Ball Seat	2	Delrin
6	Body Seal	1	Grafoil
7	Thrust Washer	1	Grafoil
8	Stem Packing	1	Grafoil
8a	O-Ring	1	Viton
9	Gland Packing	1	50% STFE
9a	Stem Washer	1	SS304
10	Stem Nut	1	SS304
11	Lock Saddle	1	SS304
12	Handle	1	SS304
13	Stop Bolt	1	SS304
14	Stop Nut	1	SS304
15	Stop Washer	1	SS304
16	Handle Bolt	1	SS304
17	Handle Sleeve	1	Vinyl

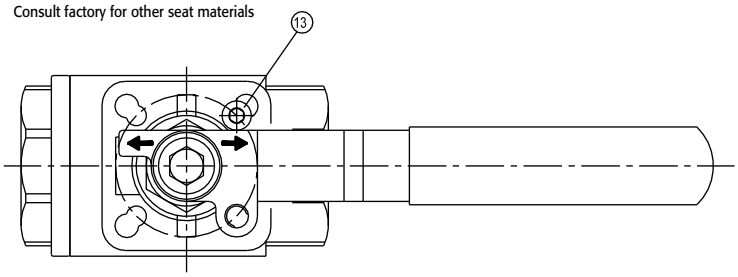

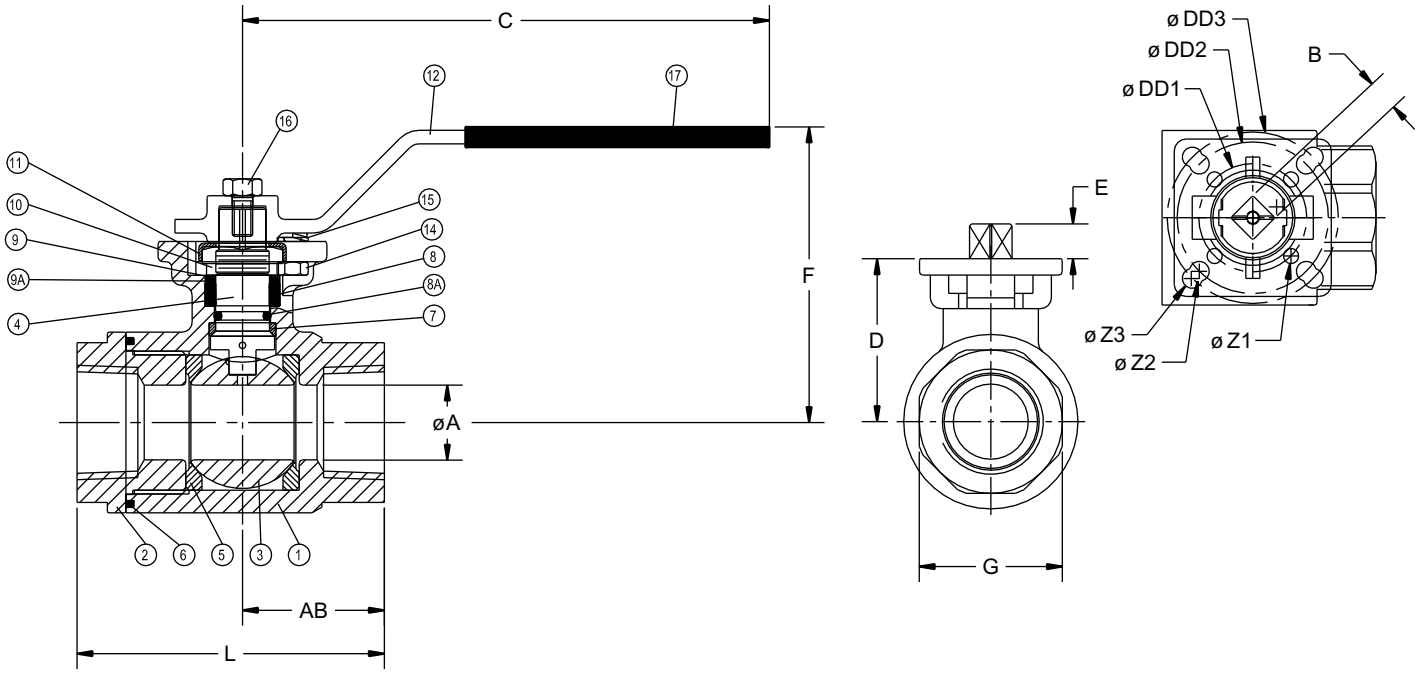

DIMENSIONS (IN)

SIZE	A	B	C	D	E	F	G	L	AB	DD1	DD2	DD3	Z1	Z2	Z3	ISO 5211
1/4"	0.38	0.354	4.96	1.61	0.31	2.83	1.02	2.95	1.417	1.417	1.654	1.969	0.24	0.24	0.28	F03/F04/F05
3/8"	0.38	0.354	4.96	1.61	0.31	2.83	1.02	2.95	1.417	1.417	1.654	1.969	0.24	0.24	0.28	F03/F04/F05
1/2"	0.50	0.354	4.96	1.61	0.31	2.83	1.28	2.95	1.417	1.417	1.654	1.969	0.24	0.24	0.28	F03/F04/F05
3/4"	0.69	0.354	4.96	1.72	0.31	2.87	1.51	3.19	1.417	1.417	1.654	1.969	0.24	0.24	0.28	F03/F04/F05
1"	0.87	0.433	6.14	2.11	0.39	3.43	1.86	3.58	1.654	1.654	1.969	–	0.24	0.28	–	F04/F05
1-1/4"	1.14	0.433	6.14	2.32	0.39	3.66	2.32	4.33	1.654	1.654	1.969	–	0.24	0.28	–	F04/F05
1-1/2"	1.37	0.551	7.13	2.96	0.51	4.49	2.61	4.76	1.969	1.969	2.756	–	0.28	0.34	–	F05/F07
2" RP	1.37	0.551	7.13	2.96	0.51	4.49	3.23	5.71	1.969	1.969	2.756	–	0.28	0.34	–	F05/F07

Viton® is a registered trademark of E.I. DuPont de Nemours.

A-T Controls reserves the right to change product designs and technical/dimensional specifications without notice.

A-T Controls, Inc.

9955 International Blvd.
Cincinnati, Ohio 45246
www.atcontrols.com

PHONE (513) 247-5465
FAX (513) 247-5462
sales@atcontrols.com