CAUTION: 1. For your safety read this manual before installation or servicing.
2. Before installing or servicing, please ensure the line pressure has been relieved, and any hazardous fluids have been drained or purged from the system.
3. Ensure that all Lockout and Tagout procedures for the system have been properly implemented.

1. USE:

1.1 A-T Controls Resilient Seated Butterfly are available in lug and wafer style designs and are compatible with ANSI 125/150 flanges.

1.2 Maximum results and optimum valve life can be maintained under normal service conditions and in accordance with pressure/temperature ratings and corrosion data chart.

2. GENERAL INFORMATION FOR INSTALLATION:

CAUTION: Valves must have downstream piping installed before being pressurized or operated. Failure to do so can cause the seat to shift downstream or break.

2.1 A-T Controls Resilient Seated Butterfly Valves are bi-directional and can be installed with the flow in either direction. The valve can be mounted in any position so that the handle, gear, or actuator has proper clearance, can be easily accessed, and the open/close indicator can be viewed. If the gear is equipped with a chain wheel the valve should be mounted in a way so that the chain does not come in contact with the valve or pipeline.

2.2 Before installation of the valves, the pipe must be flushed clean of dirt, burrs and welding residues. Failure to do so can cause the seats and sealing surfaces to be damaged.

2.3 The pipe must be free from tension and in proper alignment.

2.4 Before installing valves check to ensure that all flange seals are free from defects. Flange gaskets are not recommended for A-T Controls Resilient Seated Butterfly Valves. The valves have a seal around the seat so that a gasket is not required.

2.5 Before installing valves check to ensure that there is proper clearance for the disc to be able to fully open and close without being obstructed. This is especially important when using sch. 80 pipe as the clearances become smaller. See catalog for dimensions.

2.6 Valves should be installed in pipeline completely assembled and open 5 degrees from the closed position. The valve should NOT be open so that the disc is outside of the seat. Do not disassemble the valves or remove handle, gears, or actuators to install.

2.7 Install the valve to the pipeline and tighten bolts properly.

3. MANUAL OPERATION:

CAUTION: A-T Controls recommends a manual gear operator for all valves 6” and larger.

HANDLE: To **OPEN** the valve; squeeze the handle to unlock it and turn it in the counter-clockwise direction. The handle can be locked in at 10 degree increments to adjust the flow. The valve will be locked into the 90 degree marker and parallel to the pipeline when fully closed.

To **CLOSE** the valve; squeeze the handle to unlock it and turn it in the clockwise direction. The handle can be locked in at 10 degree increments to adjust the flow. The valve will be locked into the 0 degree marker and perpendicular to the pipeline when fully closed.

Gear: To **OPEN** the valve; turn the hand wheel counter-clockwise. The indicator will be pointing to the open position and stop rotating when fully opened. The flow can be adjusted by stopping the indicator anywhere between open and close.

To **CLOSE** the valve, turn the hand wheel clockwise. The indicator will be pointing to the close position and the hand wheel will stop rotating when fully closed. The flow can be adjusted by stopping the indicator anywhere between open and close.

4. AUTOMATED OPERATION:

A-T Controls Resilient Seated Butterfly Valves can be mounted with quarter turn actuators. Valves with actuators should be checked for proper valve stem alignment. Angular or linear misalignment may result in high operational torque and unnecessary wear on the valve stem. See the actuator IOM for information on operating the actuator.

5. DISASSEMBLY & CLEANING PROCEDURE:

5.1 Drain and make sure there is no pressure in the pipeline and take necessary precautions for the media in the pipeline.
5.2 Set valve to closed position and remove it from the pipeline.
5.3 Lay the valve flat on a clean and smooth surface.
5.4 Remove the lower shaft retainer pin (2) using a punch that is the same size or smaller than the pin.
5.5 Remove the lower shaft (3) and lower shaft o-ring (4).
5.6 Remove the retaining ring (12) and shaft keeper ring (9)
5.7 Pull the upper shaft (8) out of the body (6) being careful to not let the disc (1) drop out of the valve.
5.8 Remove the disc (1) and then press out the seat (5) by applying even pressure on one side of the valve.
5.9 Remove the upper bushings (10), upper o-ring, and lower bushing (7).
5.10 Thoroughly clean all parts and check for defects. A-T Controls recommends replacing the seat (5), o-rings (4 & 11), and bearings (7 & 10)

6. ASSEMBLY

6.1 When all of the parts have been cleaned and the necessary parts have been replaced apply A-T Controls approved grease liberally to body's (6) internal surfaces.
6.2 Insert the bearing (7 & 10) and the o-ring (11).
6.3 Press in a new seat (5) by applying pressure evenly making sure that the shaft holes on the seat (5) line up with the shaft holes on the body (6).
6.4 Liberally apply A-T Controls approved grease to the inside of the seat (5). With the disc (1) in the open position push the disc (1) into the seat (5) while trying to line up the shaft holes as close as possible.
6.5 Roll lower shaft o-ring (4) onto lower shaft (3) and push into body (6) shaft hole. Carefully press in lower shaft retainer pin (2).
6.6 Insert upper shaft (8), shaft keeper ring (9), and retaining ring (12).

BILL OF MATERIALS		
ITEM	QTY.	DESCRIPTION
1	1	DISC
2	1	LOWER SHAFT RETAINER PIN
3	1	LOWER SHAFT
4	1	LOWER SHAFT O-RING
5	1	SEAT
6	1	BODY
7	1	LOWER BUSHING
8	1	UPPER SHAFT
9	1	SHAFT KEEPER RING
10	2	UPPER BUSHING
11	1	UPPER SHAFT O-RING
12	1	RETAINING RING
SEE CATALOG FOR MATERIALS		

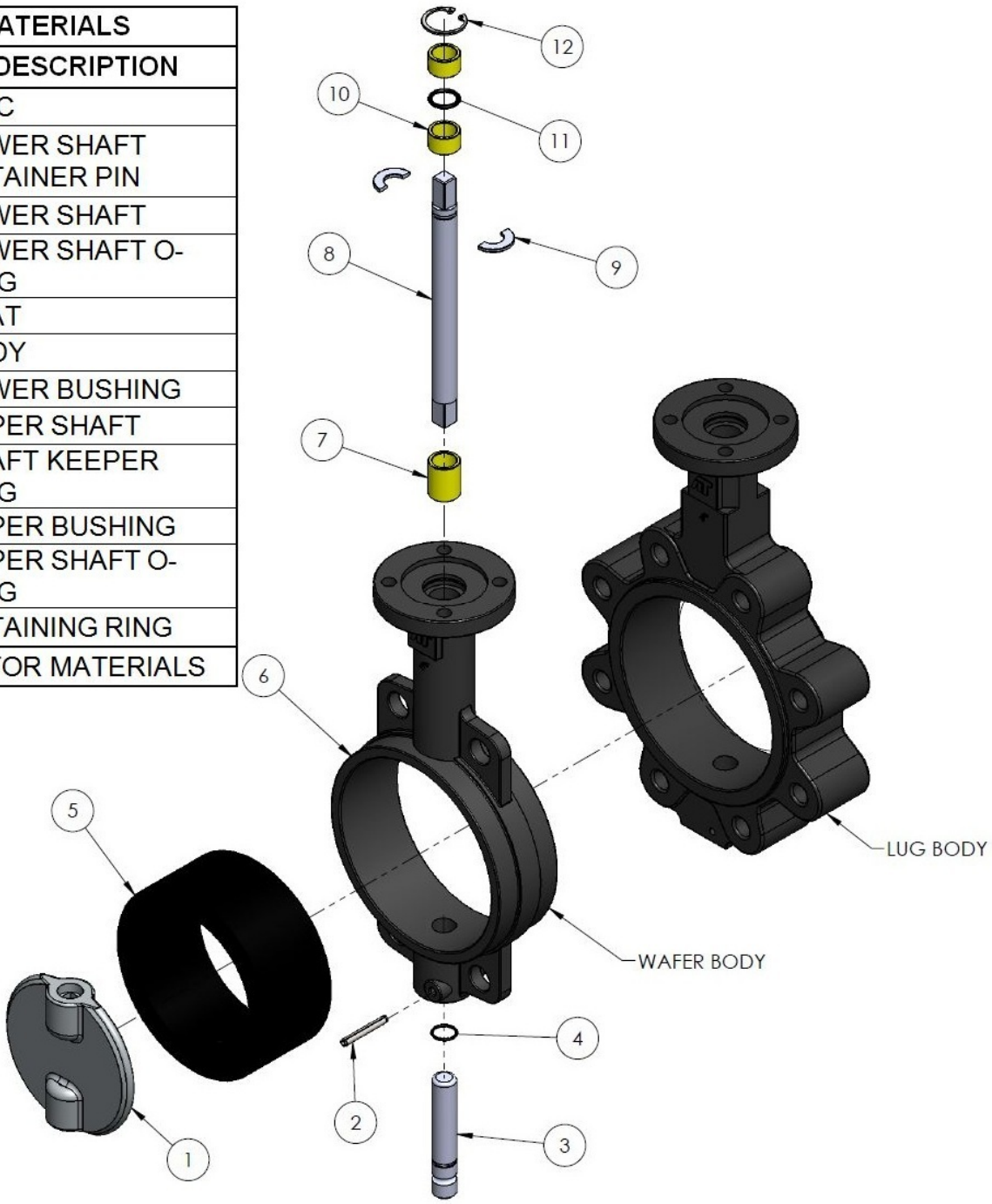

A-T Controls product, when properly selected, is designed to perform its intended function safely during its useful life. However, the purchaser or user of A-T Controls products should be aware that A-T Controls products might be used in numerous applications under a wide variety of industrial service conditions. Although A-T Controls can provide general guidelines, it cannot provide specific data and warnings for all possible applications. The purchaser / user must therefore assume the ultimate responsibility for the proper sizing and selection, installation, operation, and maintenance of A-T Controls products. The user should read and understand the installation operation maintenance (IOM) instructions included with the product, and train its employees and contractors in the safe use of A-T Controls products in connection with the specific application.

While the information and specifications contained in this literature are believed to be accurate, they are supplied for informative purposes only. Because A-T Controls is continually improving and upgrading its product design, the specifications, dimensions and information contained in this literature are subject to change without notice. Should any question arise concerning these specifications, the purchaser/user should contact A-T Controls.

For product specifications go to http://download.a-tcontrols.com/

A-T Controls, Inc. • 9955 International Boulevard, Cincinnati, OH 45246 • Phone: (513) 530-5175 • Fax: (513) 247-5462 • www.a-tcontrols.com