Bimetal Thermometer
Model TI.30, Stainless Steel Case & Wetted Parts

Applications

- Suitable for fluid medium which does not corrode 304 stainless steel

Special features

- Industrial design
- Stainless steel case and wetted parts
- Back connection with external reset

Pressure Gauge TI.30

Standard version

Application
Industrial type design for fluid medium which does not corrode 304 stainless steel.

Sizes
3” (76.2 mm) Type TI.30

Accuracy
+ 1.0% full scale value (ASME B40.3)

Ranges
-100 °F to 1000 °F (and equivalent Celsius)

Working Range
Steady: full scale value
Short time: 110% of full scale value

Over Range
Temporary over or under range tolerance of 50% of scale up to 500 °F. (260°C). For ranges above 500°F, maximum over range is 800°F; continous. 1000°F intermittent.

Connection
Material: 304 stainless steel
Center back mount (CBM), 1/2” NPT

Measuring Element
Bi-metal helix

Pointer
Black aluminum

Stem
Material: 304 stainless steel
Diameter: ¼” (6.35 mm)
Length: 2 ½” to 72” (63.5 mm to 1,828.8 mm)

Case
Material: 304 stainless steel
Hermetically sealed per ASME B40.3 standard
Ingress protection IP 65
External reset slotted hex head on back of case

Dial
White aluminum, dished, with black markings

Dampening
Inert gel to minimize pointer oscillation

Standard Scales
Single: Fahrenheit or Celsius
Dual: Fahrenheit (outer) and Celsius (inner)

Window Gasket
Neoprene
Silicone (-100 °F and over 550 °F)

Window
Flat instrument glass

Weight
7 oz. (3” dial); Add 1 oz for every 2” of stem length

Movement
Viscous inert gel to enhance pointer operation

WIKA®
Part of your business

Optional Extras

- Thermowells
- Silicone fill
- Dampened Movement
- Special scales and dial markings
- Acrylic and safety glass windows
- Calibration certification traceable to NIST
- Min/max pointer
- DIN standards

STANDARD RANGES		
Fahrenheit	Dual Scale F & C	Celsius
Single Scale	F Outer, C Inner	Single Scale
-100/150 F	-100/150 F & -70/70 C	-50/50 C
-40/120 F	-40/120 F & -40/50 C	-20/120 C
0/140 F	0/140 F & -20/60 C	0/50 C[1]
0/200 F	0/200 F & -15/90 C	0/100 C
0/250 F	0/250 F & -20/120 C	0/150 C
20/240 F	20/240 F & -5/115 C	0/200 C
25/125 F	25/125 F & -5/50 C[1]	0/250 C
50/300 F	50/300 F & 10/150 C	0/300 C
50/400 F	50/400 F & 10/200 C	0/450 C[1]
50/550 F	50/500 F & 10/260 C	100/550 C[1]
150/750 F	150/750 F & 65/400 C	
200/1000 F[1]	200/1000 F & 100/540 C[1]	

[1]Not recommended for continous service over 800°F (425°C)

Dimensions

Standard versions

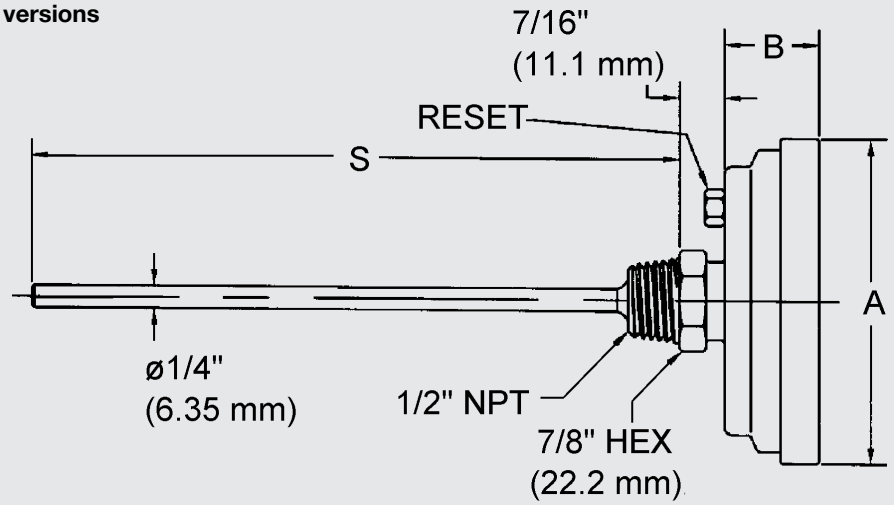

Stem Length
2½" (63.5 mm)
4" (101.6 mm)
6" (152.4 mm)
9" (228.6 mm)
12" (304.8 mm)
15" (381.0 mm)
18" (457.2 mm)
24" (609.6 mm)

WIKA Type	DIAL SIZE	A	B	S (Stem Length)
30"	3" (76.2 mm)	3-1/4" (82.6 mm)	15/16" (23.8 mm)	As Specified

Note: Thermowells for temperature instruments are recommended for all process systems where pressure, velocity, or viscous, abrasive and corrosive materials are present individually or in combination. A properly selected thermowell protects the temperature instrument from possible damage resulting from these process variables. Furthermore, a thermowell permits removal of the temperature instrument for replacement, repair or testing without effecting the process media or the system.

Ordering information
State computer part number (if available) /type number/size/range/connection size and locations/options required. WIKA reserves the right to make changes without prior notice.

WIKA Instrument Corporation
1000 Wiegand Boulevard
Lawrenceville, GA 30043
1-888-WIKA-USA /770-513-8200 (in GA)
Fax 770-338-5118
info@wika.com www.wika.com